ALLIED MACHINE & ENGINEERING

Holemaking Solutions for Today's Manufacturing

Master Product

CATALOG

Drilling

Boring

Reaming

Burnishing

Threading

Specials

www.alliedmachine.com

Product Selection Guide | Drilling

Diameter Range (inch / mm)

Product	0 - 0.5 / 0 - 12.7	0.5 - 1 / 12.7 - 25.4	1 - 1.5 / 25.4 - 38.1	1.5 - 2 / 38.1 - 50.8	2 - 2.5 / 50.8 - 63.5	2.5 - 3 / 63.5 - 76.2	3 - 3.5 / 76.2 - 88.9	3.5 - 4 / 88.9 - 101.6	4 - 4.5 / 101.6 - 114.3	4.5 - 5 / 114.3 - 127	5 - 5.5 / 127 - 139.7	5.5 - 6 + / 139.7 - 152.4 +
GEN3SYS® XT Pro		0.4331" - 1.3780" (11.00 mm - 35.00 mm)										
GEN3SYS® XT		0.4331" - 1.3780" (11.00 mm - 35.00 mm)										
T-A Pro®		0.3739" - 1.8820" (9.50 mm - 47.80 mm)										
GEN2 T-A®		0.3739" - 4.5070" (9.50 mm - 114.48 mm)										
T-A®		0.3739" - 4.5070" (9.50 mm - 114.48 mm)										
High Performance			0.9688" - 5.0000" (24.60 mm - 127.00 mm)									
Universal			0.9688" - 8.5000" (24.60 mm - 215.90 mm)									
APX™ Drill				1.2992" - 4.0000" (33.00 mm - 101.60 mm)								
4TEX® Drill		0.4720" - 1.8500" (12.00 mm - 47.00 mm)										
Revolution Drill®					1.8750" - 4.0000" (47.60 mm - 101.60 mm)							
Opening Drill®					2.0000" - 5.6200" (50.80 mm - 142.80 mm)							
Structural Steel: GEN3SYS® XT Pro		0.4331" - 1.3780" (11.00 mm - 35.00 mm)										
Structural Steel: T-A®		0.5110" - 1.8820" (12.98 mm - 47.80 mm)										
AccuPort 432®		0.3860" - 2.4210" (9.80 mm - 61.50 mm)										
BT-A Drill		0.5100" - 1.8829" (12.95 mm - 47.82 mm)										

▶ Any product line with a black arrow indicates that larger nonstandard diameters can be ordered by contacting Application Engineering:

1.330.343.4283 ext. 7611 1.800.321.5537 (toll free United States and Canada) appeng@alliedmachine.com

Online Product Selector

Have an application in your sights? You can utilize our Product Selector online to find the right tool for the job. Product Selector will provide run time parameters along with detailed information about the item(s) you need.

Visit **www.alliedmachine.com/ProductSelector** to get started.

Length-to-Diameter Ratio	Machining Application					Material						Section
	General Purpose	High Penetration	Deep Hole	Large Diameter	Industry Specific	P	S	M	H	K	N	
3xD, 5xD, 7xD, 10xD, 12xD	●	●	●			●		●		●	●	A20
Stub, 3xD, 5xD, 7xD	●	●				●	◐	●	○	●	●	A20
Stub, 3xD, 5xD, 7xD, 10xD, 12xD, 15xD	○	●	●	○		●	●	●		●	●	A25
1xD to 28xD	●	○	●	●		◐	◐	◐		◐	◐	A30
1xD to 28xD	●	○	●	●		◐	◐	◐	◐	◐	◐	A30
	●		◐	●		◐	○	◐		○	◐	A40
	●		◐	●		○	○	○		○	○	A40
3xD, 5xD, 8xD, 10xD	◐		●	●		●	○	◐		●	◐	A50
2xD, 3xD, 4xD	●	◐				●	●	●	◐	●	◐	A55
1xD, 2.2xD, 2.5xD, 3.5xD, 4.5xD,	○	◐		●		●		●	○	●	◐	A60
	○	◐		●		●		●	○	●	◐	A70
1.5xD, 3xD, 5xD, 7xD		○	◐		●	●						A91
2xD, 4xD, 5xD, 6xD	○				●	●						A91
					●	●		○		●	◐	A92
		◐	●		●	●	○	○		●	◐	A93

● Best ◐ Better ○ Good

SECTION

A20

GEN3SYS® XT & XT Pro

GEN3SYS® XT and XT Pro

High Penetration Replaceable Insert Drilling System | GEN3SYS XT | GEN3SYS XT Pro

- **Diameter Range:** 0.4331" - 1.3780" (11.00 mm - 35.00 mm)

The Next Generation of Drilling

The GEN3SYS XT and XT Pro replaceable insert high penetration drilling system has been designed to provide high-speed production machining beyond the capabilities of the T-A® drilling system. The product offering consists of various grades, geometries, and coatings available to suit the most demanding applications.

Conceived from the outset as the ultimate high performance drilling solution, the GEN3SYS XT drill range is incredibly versatile. Incorporating both straight and helical fluted tool holder options across the range, as well as through coolant for maximum material removal, GEN3SYS XT not only gives outstanding performance from day one, but it can also be reground for extended life and economy.

Excellent chip control.	Improves hole quality and surface finish.	Provides maximum durability and stability.

Applicable Industries

Aerospace | Agriculture | Automotive | Firearms | General Machining | Oil & Gas | Renewable Energy

Your safety and the safety of others is very important. This catalog contains important safety messages. Always read and follow all safety precautions.

This triangle is a safety hazard symbol. It alerts you to potential safety hazards that can cause tool failure and serious injury.

When you see this symbol in the catalog, look for a related safety message that may be near this triangle or referred to in the nearby text.

There are safety signal words also used in the catalog. Safety messages follow these words.

WARNING

WARNING (shown above) means that failure to follow the precautions in this message could result in tool failure and serious injury.

NOTICE means that failure to follow the precautions in this message could result in damage to the tool or machine but not result in personal injury.

NOTE and **IMPORTANT** are also used. These are important that you read and follow but are not safety-related.

Visit www.alliedmachine.com for the most up-to-date information and procedures.

Reference Icons
The following icons will appear throughout the catalog to help you navigate between products.

Setup / Assembly Information
Detailed instructions and information regarding the corresponding part(s)

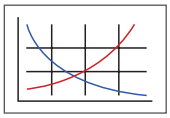

Recommended Cutting Data
Speed and feed recommendations for optimum and safe drilling

Coolant-Through Option
Indicates that the product is coolant through

Series	Diameter Range	
	Imperial (inch)	Metric (mm)
11	0.4331 - 0.4723	11.00 - 11.99
12	0.4724 - 0.5117	12.00 - 12.99
13	0.5118 - 0.5511	13.00 - 13.99
14	0.5512 - 0.5905	14.00 - 14.99
15	0.5906 - 0.6298	15.00 - 15.99
16	0.6299 - 0.6692	16.00 - 16.99
17	0.6693 - 0.7086	17.00 - 17.99
18	0.7087 - 0.7873	18.00 - 19.99
20	0.7874 - 0.8660	20.00 - 21.99
22	0.8661 - 0.9448	22.00 - 23.99
24	0.9449 - 1.0235	24.00 - 25.99
26	1.0236 - 1.1416	26.00 - 28.99
29	1.1417 - 1.2597	29.00 - 31.99
32	1.2598 - 1.3780	32.00 - 35.00

GEN3SYS® XT and XT Pro Drilling System Contents

Introduction Information

Why You Should Use the Pro . . . . . 2 - 3
Test Results and Case Study . . . . . 4 - 5
GEN3SYS XT Pro Drilling System Information 6
GEN3SYS XT Drilling System Information 7
Insert Comparison and Assembly Details 8
Holder Comparison and Overview 9
Product Nomenclature . . . . . 10 - 11

Drill Series

11 Series . . . . . 12 - 15
12 Series . . . . . 16 - 19
13 Series . . . . . 20 - 23
14 Series . . . . . 24 - 27
15 Series . . . . . 28 - 31
16 Series . . . . . 32 - 35
17 Series . . . . . 36 - 39
18 Series . . . . . 40 - 43
20 Series . . . . . 44 - 47
22 Series . . . . . 48 - 51
24 Series . . . . . 52 - 55
26 Series . . . . . 56 - 59
29 Series . . . . . 60 - 63
32 Series . . . . . 64 - 67

Recommended Cutting Data

Imperial (inch)
- GEN3SYS XT Pro . . . . . 68 - 71
- GEN3SYS XT . . . . . 72 - 75

Metric (mm)
- GEN3SYS XT Pro . . . . . 76 - 79
- GEN3SYS XT . . . . . 80 - 83

Tap Drill Conversions . . . . . 84 - 85
Deep Hole Drilling Guidelines 86
Troubleshooting Guide 87

WHY SHOULD YOU
GO WITH THE **PRO**?
GEN3SYS® XT **Pro**

- ✓ Increase your penetration rates
- ✓ ISO-specific geometries
- ✓ Improved chip evacuation
- ✓ Increased coolant flow to the cutting zone
- ✓ AM420 coating increases heat resistance
- ✓ AM440 coating increases abrasion resistance

THAT'S WHY YOU SHOULD
GO WITH THE **PRO**.

Project Profile:	Forged 8640
Tooling Solution:	GEN3SYS XT Pro: P (Steel) Geometry

The Problem:

Previously, the customer was using a competitor drill running at the following parameters:

- 415 SFM (127 m/min)
- 0.009 IPR (0.23 mm/rev)
- The tool drilled a 17.25 mm diameter hole to a 20 mm depth
- Tool life = **1,000 holes**

The Solution:

Allied Machine recommended the GEN3SYS XT Pro with P (Steel) geometry.

- **Insert** = XTP17-17.25

The tool ran at the following parameters:

- 415 SFM (127 m/min)
- 0.009 IPR (0.23 mm/rev)
- The tool drilled a 17.25mm diameter hole to a 20 mm depth
- Tool life = **2,100 holes**

The Advantage:

The GEN3SYS XT Pro increased the tool life from 1,000 holes to 2,100 holes.

Bottom Line: ***Doubled the tool life***

The **PROOF** is in the **NUMBERS**

Competitor Insert Tool Life
(number of holes = 1,000)

XT Pro Insert Tool Life
(number of holes = 2,100)

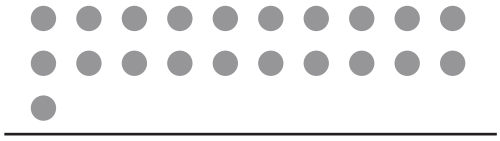

INCREASE in **2x** tool life

HOLDER DESIGN

Drill deeper holes

The XT Pro holders are available up to 12xD.

- ***This lets you take advantage of the XT Pro insert benefits in deep hole applications.***

Increase your tool life

The coolant configuration increases coolant flow and directs additional coolant to the cutting zone.

- ***This increases tool life with all XT Pro inserts.***

Competitive Test Results

TEST RESULTS

Project Profile:	Competitive Testing in 4150 Steel
Tooling Solution:	GEN3SYS XT Pro: (P) steel geometry with XT Pro Holder

The Parameters:

- Hole Diameter = 0.748" (19 mm)
- Depth of Cut = 1-1/2" (38.1 mm)
- Coolant = 300 PSI
- Speed = 1583 RPM
- Feed = 22.16 inch/min (563 mm/min)

The Results:

When run at the listed parameters, here is how the three different tooling solutions performed:

Competitor 1 = 2478 total linear inches
Competitor 2 = 3317 total linear inches
GEN3SYS XT Pro = **4224** total linear inches

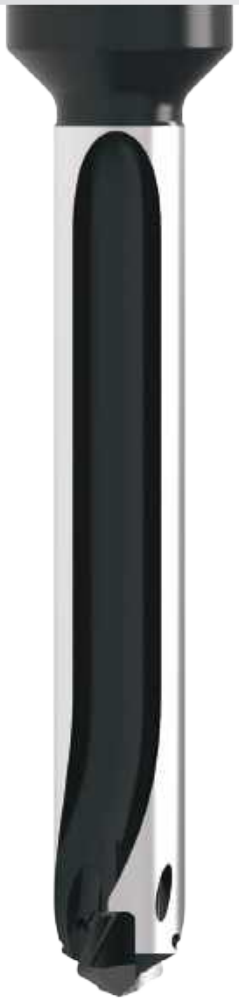

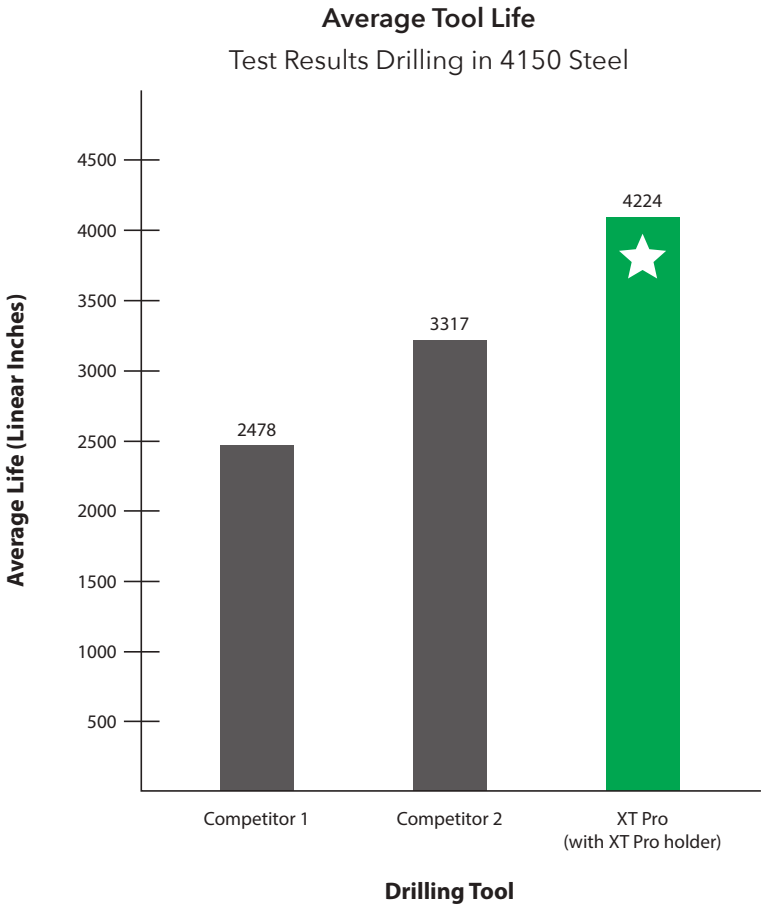

PREMIUM SOLUTION

Case Study Example

CASE STUDY

Project Profile:	Ductile/Nodular Iron
Tooling Solution:	GEN3SYS XT Pro: K (cast iron) geometry

The Problem:

Previously, the customer was using a competitor drill:

- Solid carbide drill
- Tool life = **65 holes**

The Solution:

Allied Machine recommended the GEN3SYS XT Pro with K (cast iron) geometry. The tool ran at the following parameters:

- Hole Diameter = 9/16"
- Coolant = None
- Speed = 390 SFM (117 m/min)
- Feed = 0.008 IPR (0.20 mm/rev)
- Tool life = **390 holes**

The Advantage:

The GEN3SYS XT Pro increased the tool life from 65 holes to 390 holes.

Bottom Line: ***6x the tool life***

The **PROOF** is in the **NUMBERS**

Competitor Tool Life
(number of holes = 65)

XT Pro Tool Life
(number of holes = 390)

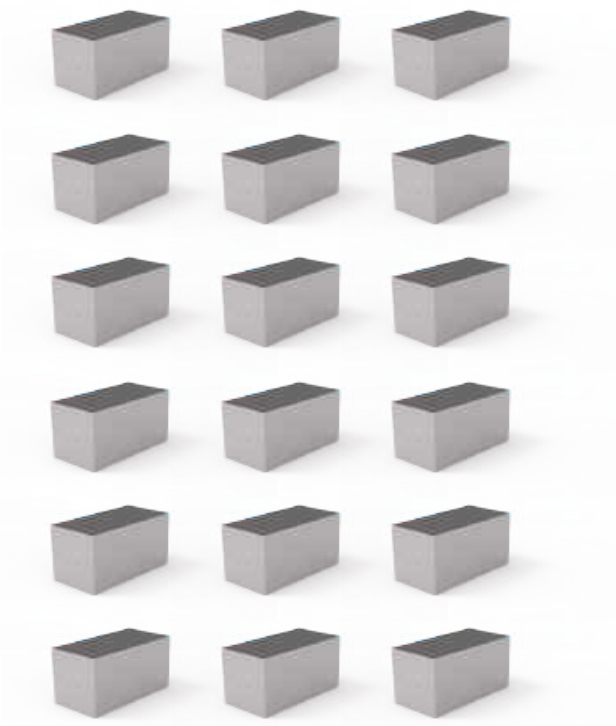

INCREASE in
6x tool life

There's More to the **Advantage** than Tool Life

The XT Pro replaceable tip system provides other benefits in addition to the increase in tool life over the solid carbide drill:

- Because only the insert needs changed when it reaches the end of its life, the XT Pro eliminates the need to re-establish tool lengths, which reduces setup times.
- Further benefit in setup is also seen as the tool only needs changed one time for every six of the customer's current method.
- Without the need for regrinds, the customer's stock of tooling is reduced by eliminating the need for float inventory to cover regrind lead time.

GEN3SYS XT Pro Drilling System Information

GEN3SYS XT Pro Drill Inserts

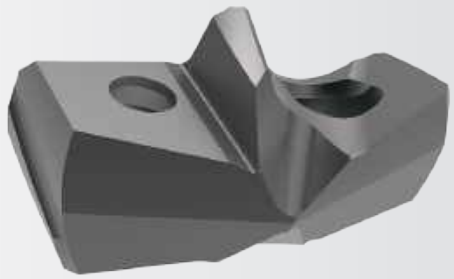

Advanced Design Capabilities

The advanced XT Pro insert combines a coating and geometry specifically designed to achieve optimal results in ISO material drilling applications. With quick connectivity to existing GEN3SYS drill insert holders, the XT Pro insert can be interchanged with previous XT inserts with ease, resulting in minimal setup times so you can immediately increase your productivity.

XT Pro Inserts Connect with:

XT Pro holders | GEN3SYS holders

P - Steels

- Designed to provide increased penetration rates and tool life in steel applications.
- Superior geometry and edge provides excellent chip control.
- Allied's multilayer AM420 coating increases heat resistance and improves tool life.

N - Nonferrous Materials

- Designed for applications in aluminum, brass, and copper.
- The geometry yields excellent chip control in these softer materials.
- TiN coating gives the versatility to run in a variety of materials while reducing buildup.

K - Cast Irons

- Uniquely designed for cast/nodular iron applications.
- Geometry includes a corner radius for improved hole finish and heat dispersion.
- Allied's multilayer AM440 coating provides increased abrasion resistance and tool life.

M - Stainless Steels*

- Designed for all 300 series, 400 series, Super Duplex Stainless steels, and other hard-to-machine materials in the ISO M group.
- Geometry optimized for improved chip formation while drilling at high penetration rates.
- Substrate chosen to provide balance of toughness and wear resistance in difficult applications.
- Allied's AM460 coating provides industry-leading tool life in stainless steels.

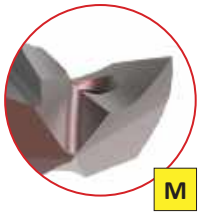

***Available in 12-32 series only.**

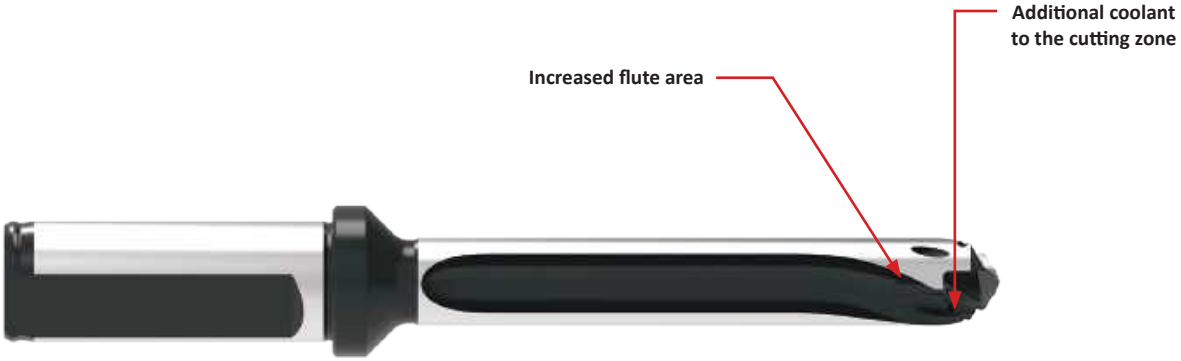

XT Pro Drill Holders

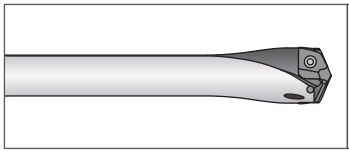			**3xD, 5xD, 7xD, 10xD, 12xD**
Straight flutes	Enhanced coolant inlets improve the coolant flow	Provides increased insert life	Available in 3xD, 5xD, 7xD, 10xD, and 12xD

GEN3SYS XT Drilling System Information

GEN3SYS XT Drill Inserts

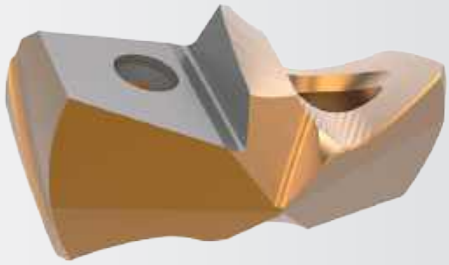

High Penetration Drilling Solutions

The unique geometry of the XT inserts provides excellent chip control. They are designed to increase hole quality, surface finish, and true position when compared to other competitive products. The helical margin design provides maximum durability and stability.

XT Inserts Connect with:

XT Pro holders

GEN3SYS holders

Standard Geometry

- Designed with corner and cutting edge enhancements to deliver more reliability, durability, and productivity.
- Increases penetration rates and tool life.
- Available in C1 or C2 carbide.

LR - Low Rake Geometry

- The toughest XT geometry available.
- Designed for harder steels and less than ideal machining applications.
- Available in C1 or C2 carbide.

CI - Cast Iron Geometry

- Increases durability and tool life in ductile, nodular, and grey cast irons.
- Available in C2 carbide.

AS - Stainless Steel Geometry

- Designed with a specific geometry to provide unmatched chip control and tool life in austenitic and PH stainless steels, as well as high temperature alloys such as Inconel, Hastelloy, and titanium alloys.
- Available in C2 carbide.

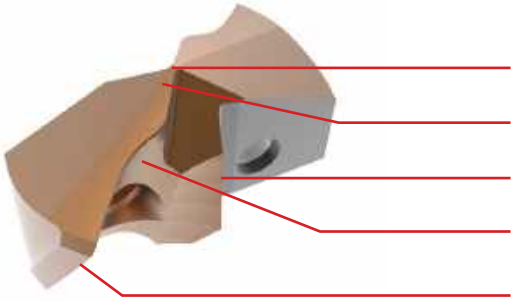

Coating	Features / Benefits
AM300®	• Increased heat resistance over AM200® coating. • Up to 20% increased tool life over AM200 coating. • Provides superior tool life at high penetration rates.

GEN3SYS Holders

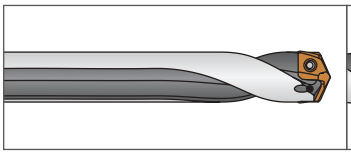

Straight flutes

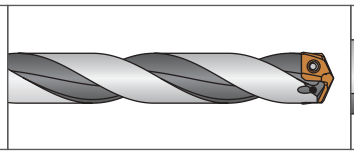

Helical flutes

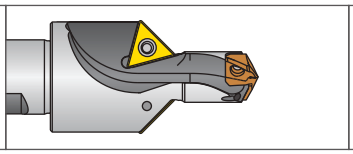

Drill / chamfer style

Stub, 3xD, 5xD, 7xD

Available in stub, 3xD, 5xD, and 7xD

Insert Comparison and Assembly Information

		XT Pro Inserts	XT Inserts
Recommended for increased productivity		✓	
ISO-specific geometry/coating combination	P N K	✓	
Connects with XT Pro holders	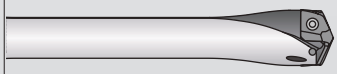	✓	✓
Connects with GEN3SYS holders		✓	✓

Step 1:
Align the flats on the GEN3SYS XT insert with the flats on the ears of the holder.

Step 2:
Slide the insert into the precision ground locating pocket on the holder. The insert should not be turned, rotated, or twisted for locking purposes. The holder pocket and locating pads on the insert assure optimum fit and repeatability.

Step 3:
Apply a generous amount of E-Z Break® (provided in the packaging) onto the supplied TORX® Plus screws.

Tighten the TORX Plus screws to the recommended torque value specified in the catalog by series. A preset torx driver is available to assure that the proper torque is applied.

Holder Comparison and Overview

		XT Pro Holders	GEN3SYS Holders
Recommended for increased productivity		✓	
Straight flute	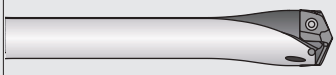	✓	✓
Helical flute			✓
Drill/chamfer option	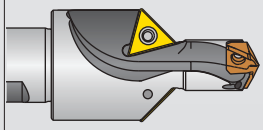		✓
Available in 12xD length	12XD	✓	
Connects with XT Pro inserts	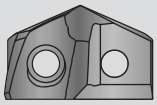	✓	✓
Connects with XT inserts	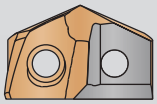	✓	✓

XT Pro Holders

Straight Flute

GEN3SYS Holders

Straight Flute

Helical Flute

Drill/Chamfer

Product Nomenclature

GEN3SYS XT Pro Drill Inserts

XT	P	11	–	11.00
1	2	3		4

1. XT Pro Drill Insert	2. ISO Material / Geometry	3. Series		4. Diameter (mm)
XT = XT Pro insert	**P** = Steel	**11** = 11 series	**18** = 18 series	For complete list of diameter ranges by series, see contents page.
	K = Cast iron	**12** = 12 series	**20** = 20 series	
	N = Nonferrous	**13** = 13 series	**22** = 22 series	
	M = Stainless steel*	**14** = 14 series	**24** = 24 series	
		15 = 15 series	**26** = 26 series	
		16 = 16 series	**29** = 29 series	
		17 = 17 series	**32** = 32 series	

*Available in 12-32 series only.

GEN3SYS XT Drill Inserts

7	C2	12	P	–	.484	CI
1	2	3	4		5	6

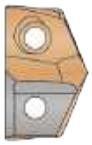

1. XT Drill Insert	2. Insert Material	3. Series		4. Coating
7 = XT insert	**C1** = C1 (K35) carbide	**11** = 11 series	**18** = 18 series	**P** = AM300®
	C2 = C2 (K20) carbide	**12** = 12 series	**20** = 20 series	
		13 = 13 series	**22** = 22 series	
		14 = 14 series	**24** = 24 series	
		15 = 15 series	**26** = 26 series	
		16 = 16 series	**29** = 29 series	
		17 = 17 series	**32** = 32 series	

5. Diameter	6. Geometry
0017 = Inch	**CI** = Cast iron
.515 = Decimal	**LR** = Low rake
13 = Metric	**AS** = Stainless steel

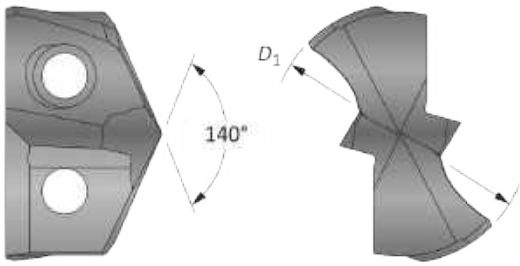

Regrinding and Recoating

The GEN3SYS XT and XT Pro drilling system is so cost efficient that it eliminates the need for regrinding and recoating. However, if you choose to have your drill inserts reground, it is critical that it be done by Allied Machine. Any slight deviation in performance due to an improperly reground drill insert will more than offset any benefit from regrinding. Using our service ensures that the best tool performance is maintained in your production process. When returning tools for regrinding, please package tools carefully to avoid damage during shipment. Returning drill inserts for regrinding in their original packaging will help avoid damage during shipment. Drill inserts reground by Allied Machine are repackaged and clearly identified as "Allied Regrind" to avoid any confusion with new tools.

Reference Key

Symbol	Attribute
D_1	Insert diameter

Product Nomenclature

GEN3SYS and XT Pro Drill Holders

HXT	03	12	S	–	20	FM
1	2	3	4		5	6

1. Holder
6 = GEN3SYS holder
HXT = XT Pro holder

2. Length
01 = Stub Length (GEN3SYS only)
03 = 3x Diameter
05 = 5x Diameter
07 = 7x Diameter
10 = 10x Diameter (XT Pro only)
12 = 12x Diameter (11-26 series - XT Pro only)

3. Series	
11 = 11 series	**18** = 18 series
12 = 12 series	**20** = 20 series
13 = 13 series	**22** = 22 series
14 = 14 series	**24** = 24 series
15 = 15 series	**26** = 26 series
16 = 16 series	**29** = 29 series
17 = 17 series	**32** = 32 series

4. Flute
S = Straight
H = Helical
C45 = Drill/Chamfer (both helical and drill/chamfer options available for GEN3SYS only)

5. Shank Diameter	
Imperial (inch)	**Metric (mm)**
063 = 5/8"	**16** = 16 mm
075 = 3/4"	**20** = 20 mm
100 = 1"	**25** = 25 mm
125 = 1-1/4"	**32** = 32 mm
150 = 1-1/2"	**40** = 40 mm

6. Shank Style
F = Flanged with flat
FM = Flanged metric with flat
C = Cylindrical (no flat)
CM = Cylindrical metric (no flat)

Holder Ordering Information

The series designator (11 series, 12 series, etc.) in the top corner of each page is for your reference when ordering. Please refer to these series designators when placing an order. For example, a 12 series drill insert only fits into a 12 series holder.

Reference Key

Symbol	Attribute
D_2	Shank diameter
D_5	Step diameter (drill/chamfer)
L_1	Overall length
L_2	Drill depth
L_3	Holder reference length
L_4	Holder body length
L_5	Step length (drill/chamfer)
L_7	Shank length
P_1	Rear pipe tap (GEN3SYS)

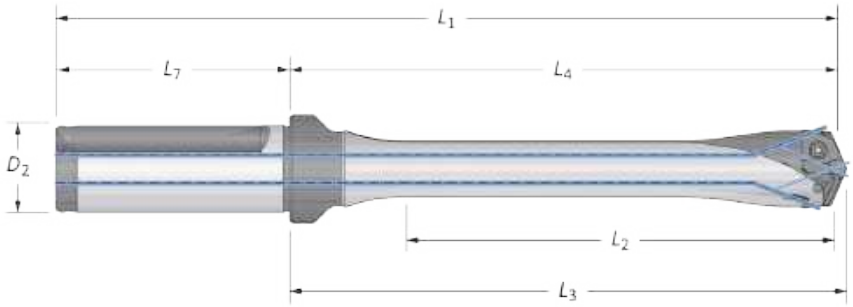

GEN3SYS XT Pro Drill Inserts

11 Series | Diameter Range: 0.4331" - 0.4723" (11.00 mm - 11.99 mm)

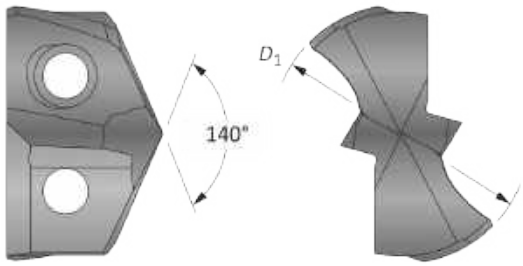

Insert					
Fractional Equivalent	D_1 inch	D_1 mm	Part No.	Part No.	Part No.
			P	K	N
–	0.4331	11.00	**XTP11-11.00**	**XTK11-11.00**	**XTN11-11.00**
7/16	0.4374	11.11	**XTP11-11.11**	**XTK11-11.11**	**XTN11-11.11**
–	0.4409	11.20	**XTP11-11.20**	**XTK11-11.20**	**XTN11-11.20**
–	0.4449	11.30	**XTP11-11.30**	**XTK11-11.30**	**XTN11-11.30**
–	0.4488	11.40	**XTP11-11.40**	**XTK11-11.40**	**XTN11-11.40**
–	0.4528	11.50	**XTP11-11.50**	**XTK11-11.50**	**XTN11-11.50**
29/64	0.4531	11.51	**XTP11-11.51**	**XTK11-11.51**	**XTN11-11.51**
–	0.4567	11.60	**XTP11-11.60**	**XTK11-11.60**	**XTN11-11.60**
–	0.4606	11.70	**XTP11-11.70**	**XTK11-11.70**	**XTN11-11.70**
–	0.4646	11.80	**XTP11-11.80**	**XTK11-11.80**	**XTN11-11.80**
15/32	0.4689	11.91	**XTP11-11.91**	**XTK11-11.91**	**XTN11-11.91**

Inserts sold in multiples of 1.

A20: 68 - 83
Key on A20: 1

A20: 6 - 9

Sizes not shown are available upon request. When ordering, please follow the example below:	
Imperial:	0.5180", Steel, 13 series = use Part No. **XTP13-13.16**
Metric:	13.16 mm, Steel, 13 series = use Part No. **XTP13-13.16**

GEN3SYS XT Pro Drill Insert Holders

11 Series | Diameter Range: 0.4331" - 0.4723" (11.00 mm - 11.99 mm)

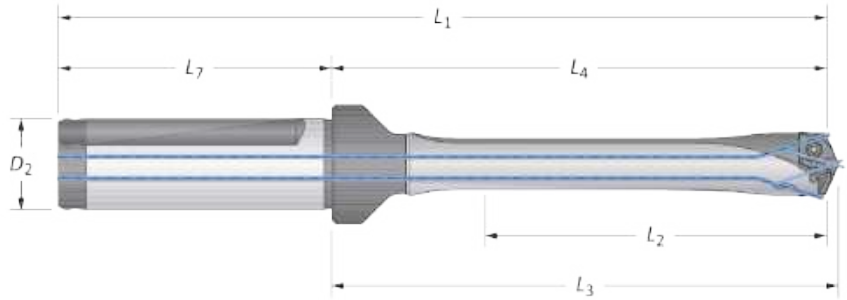

	Flute	Body Length	L_2	L_4	L_3	L_1	Shank L_7	D_2	Flat	Part No.
i	Straight	3xD	1-27/64	2-29/64	2-17/32	4-21/64	1-7/8	5/8	YES	HXT0311S-063F
		3xD	1-27/64	2-29/64	2-17/32	4-21/64	1-7/8	5/8	NO	HXT0311S-063C
		5xD	2-23/64	3-13/32	3-31/64	5-9/32	1-7/8	5/8	YES	HXT0511S-063F
		5xD	2-23/64	3-13/32	3-31/64	5-9/32	1-7/8	5/8	NO	HXT0511S-063C
		7xD	3-19/64	4-11/32	4-27/64	6-7/32	1-7/8	5/8	YES	HXT0711S-063F
		7xD	3-19/64	4-11/32	4-27/64	6-7/32	1-7/8	5/8	NO	HXT0711S-063C
		10xD	4-23/32	5-49/64	5-27/32	7-41/64	1-7/8	5/8	YES	⚠ HXT1011S-063F
		10xD	4-23/32	5-49/64	5-27/32	7-41/64	1-7/8	5/8	NO	⚠ HXT1011S-063C
		12xD	5-43/64	6-45/64	6-25/32	8-37/64	1-7/8	5/8	YES	⚠ HXT1211S-063F
		12xD	5-43/64	6-45/65	6-25/32	8-37/64	1-7/8	5/8	NO	⚠ HXT1211S-063C
m	Straight	3xD	36.0	62.6	64.4	110.6	48.0	16.0	YES	HXT0311S-16FM
		3xD	36.0	62.6	64.4	110.6	48.0	16.0	NO	HXT0311S-16CM
		5xD	60.0	86.6	88.4	134.6	48.0	16.0	YES	HXT0511S-16FM
		5xD	60.0	86.6	88.4	134.6	48.0	16.0	NO	HXT0511S-16CM
		7xD	83.7	110.6	112.4	158.6	48.0	16.0	YES	HXT0711S-16FM
		7xD	83.7	110.6	112.4	158.6	48.0	16.0	NO	HXT0711S-16CM
		10xD	119.9	146.6	148.4	194.6	48.0	16.0	YES	⚠ HXT1011S-16FM
		10xD	119.9	146.6	148.4	194.6	48.0	16.0	NO	⚠ HXT1011S-16CM
		12xD	119.9	146.6	148.4	194.6	48.0	16.0	YES	⚠ HXT1211S-16FM
		12xD	119.9	146.6	148.4	194.6	48.0	16.0	NO	⚠ HXT1211S-16CM

Connection Accessories

Insert Screws	Insert Driver	Preset Torque Hand Driver	Replacement Tips	Admissible Tightening Torque*
71843-IP6-1	8IP-6	8IP-6TL	8IP-6B	4.4 in-lbs (50 N-cm)

*Tightening torques are calculated with a friction coefficient of μ = 0.14 and develop 90% of ultimate yield strength.

⚠ WARNING Refer to Speed and Feed charts for recommended adjustments to speeds and feeds. Refer to page A20: 86 for deep hole drilling guidelines in this section of the catalog. Visit **www.alliedmachine.com/DeepHoleGuidelines** for the most up-to-date information and procedures. Factory technical assistance is available for your specific applications through our Application Engineering Team.
ext: **7611** | *email:* **appeng@alliedmachine.com**

i = Imperial (in)
m = Metric (mm)
Screws sold in multiples of 10

GEN3SYS XT Drill Inserts

11 Series | Diameter Range: 0.4331" - 0.4723" (11.00 mm - 11.99 mm)

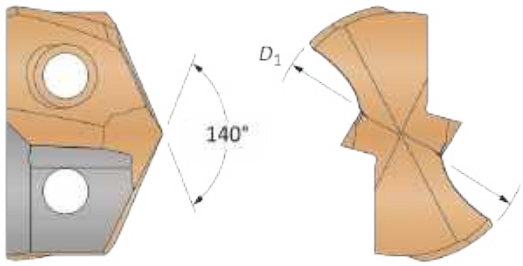

Insert							
Carbide Substrate	**Fractional Equivalent**	**D_1 inch**	**D_1 mm**	**Standard Part No.**	**Low Rake Part No.**	**Cast Iron Part No.**	**Stainless Part No.**
C1 (K35)	–	0.4331	11.00	**7C111P-11**	**7C111P-11LR**	–	–
	7/16	0.4375	11.11	**7C111P-0014**	**7C111P-0014LR**	–	–
	–	0.4528	11.50	**7C111P-11.5**	**7C111P-11.5LR**	–	–
	29/64	0.4531	11.51	**7C111P-.453**	**7C111P-.453LR**	–	–
	15/32	0.4688	11.91	**7C111P-0015**	**7C111P-0015LR**	–	–
C2 (K20)	–	0.4331	11.00	**7C211P-11**	**7C211P-11LR**	**7C211P-11CI**	**7C211P-11AS**
	7/16	0.4375	11.11	**7C211P-0014**	**7C211P-0014LR**	**7C211P-0014CI**	**7C211P-0014AS**
	–	0.4528	11.50	**7C211P-11.5**	**7C211P-11.5LR**	**7C211P-11.5CI**	**7C211P-11.5AS**
	29/64	0.4531	11.51	**7C211P-.453**	**7C211P-.453LR**	**7C211P-.453CI**	**7C211P-.453AS**
	15/32	0.4688	11.91	**7C211P-0015**	**7C211P-0015LR**	**7C211P-0015CI**	**7C211P-0015AS**

Inserts sold in multiples of 1.

A20: 68 - 83
Key on A20: 1

A20: 6 - 9

Sizes not shown are available upon request. When ordering, please follow the example below:	
Imperial:	0.5200", 13 series, C2 = use Part No. **7C213P-.5200**
Metric:	13.20 mm, 13 series, C2 = use Part No. **7C213P-13.20**

GEN3SYS Drill Insert Holders

11 Series | Diameter Range: 0.4331" - 0.4723" (11.00 mm - 11.99 mm)

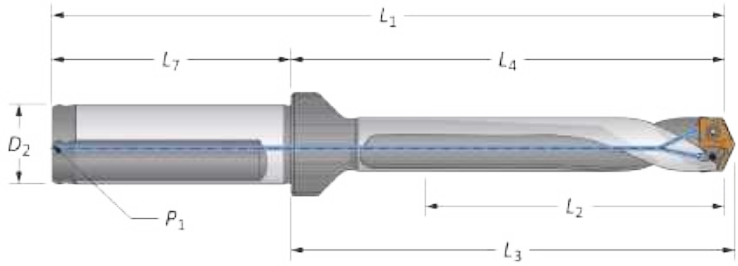

Straight and Helical

	Flute	Length	Body L_2	Body L_4	Body L_3	Body L_1	Shank L_7	Shank D_2	Shank P_1	Shank Flat	Part No.
i	Straight	3xD	1-27/64	2-29/64	2-17/32	4-21/64	1-7/8	5/8	1/16	YES	**60311S-063F**
		5xD	2-23/64	3-13/32	3-31/64	5-9/32	1-7/8	5/8	1/16	YES	**60511S-063F**
		7xD	3-19/64	4-11/32	4-27/64	6-7/32	1-7/8	5/8	1/16	YES	**60711S-063F**
	Helical	Stub	5/8	1-43/64	1-3/4	3-35/64	1-7/8	5/8	1/16	YES	**60111H-063F**
		3xD	1-27/64	2-29/64	2-17/32	4-21/64	1-7/8	5/8	1/16	YES	**60311H-063F**
		3xD	1-27/64	2-29/64	2-17/32	4-21/64	1-7/8	5/8	1/16	NO	**60311H-063C**
		5xD	2-23/64	3-13/32	3-31/64	5-9/32	1-7/8	5/8	1/16	YES	**60511H-063F**
		5xD	2-23/64	3-13/32	3-31/64	5-9/32	1-7/8	5/8	1/16	NO	**60511H-063C**
		7xD	3-19/64	4-11/32	4-27/64	6-7/32	1-7/8	5/8	1/16	YES	**60711H-063F**
		7xD	3-19/64	4-11/32	4-27/64	6-7/32	1-7/8	5/8	1/16	NO	**60711H-063C**
m	Straight	3xD	36.0	62.6	64.4	110.6	48.0	16.0	1/16*	YES	**60311S-16FM**
		5xD	60.0	86.6	88.4	134.6	48.0	16.0	1/16*	YES	**60511S-16FM**
		7xD	83.7	110.6	112.4	158.6	48.0	16.0	1/16*	YES	**60711S-16FM**
	Helical	Stub	16.0	42.6	44.7	90.6	48.0	16.0	1/16*	YES	**60111H-16FM**
		3xD	36.0	62.6	64.4	110.6	48.0	16.0	1/16*	YES	**60311H-16FM**
		3xD	36.0	62.6	64.4	110.6	48.0	16.0	1/16*	NO	**60311H-16CM**
		5xD	60.0	86.6	88.4	134.6	48.0	16.0	1/16*	YES	**60511H-16FM**
		5xD	60.0	86.6	88.4	134.6	48.0	16.0	1/16*	NO	**60511H-16CM**
		7xD	83.7	110.6	112.4	158.6	48.0	16.0	1/16*	YES	**60711H-16FM**
		7xD	83.7	110.6	112.4	158.6	48.0	16.0	1/16*	NO	**60711H-16CM**

*Thread to BSP and ISO 7-1

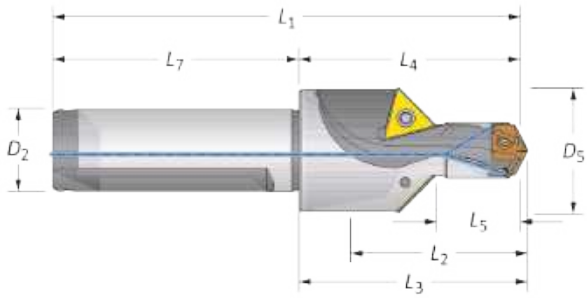

Drill / Chamfer

	Step D_5	Step L_5	Body L_2	Body L_4	Body L_3	Body L_1	Shank L_7	Shank D_2	Part No.	Chamfer Insert
i	61/64	21/32	15/16	1-43/64	1-3/4	3-35/64	1-7/8	5/8	**60111C45-063F**	**TCMT-110204**
m	24.1	16.5	23.8	42.2	44.3	90.2	48.0	16.0	**60111C45-16FM**	**TCMT-110204**

Connection Accessories

Insert Screws	Insert Driver	Preset Torque Hand Driver	Replacement Tips	Admissible Tightening Torque*
71843-IP6-1	**8IP-6**	**8IP-6TL**	**8IP-6B**	4.4 in-lbs (50 N-cm)

*Tightening torques are calculated with a friction coefficient of μ = 0.14 and develop 90% of ultimate yield strength.

i = Imperial (in)
m = Metric (mm)

Chamfer inserts sold separately in multiples of 10 | Screws sold in multiples of 10

GEN3SYS XT Pro Drill Inserts

12 Series | Diameter Range: 0.4724" - 0.5117" (12.00 mm - 12.99 mm)

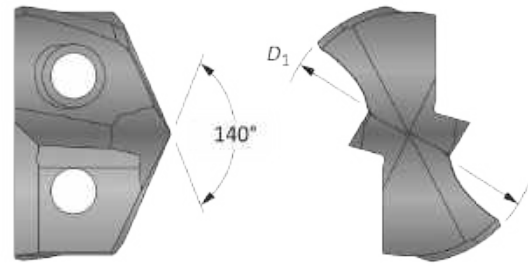

Insert			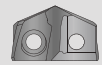	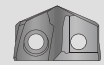	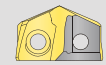	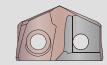
Fractional Equivalent	D_1 inch	D_1 mm	Part No.	Part No.	Part No.	Part No.
			P	K	N	M
–	0.4724	12.00	**XTP12-12.00**	**XTK12-12.00**	**XTN12-12.00**	**XTM12-12.00**
–	0.4764	12.10	**XTP12-12.10**	**XTK12-12.10**	**XTN12-12.10**	**XTM12-12.10**
–	0.4803	12.20	**XTP12-12.20**	**XTK12-12.20**	**XTN12-12.20**	**XTM12-12.20**
31/64	0.4843	12.30	**XTP12-12.30**	**XTK12-12.30**	**XTN12-12.30**	**XTM12-12.30**
–	0.4882	12.40	**XTP12-12.40**	**XTK12-12.40**	**XTN12-12.40**	**XTM12-12.40**
–	0.4921	12.50	**XTP12-12.50**	**XTK12-12.50**	**XTN12-12.50**	**XTM12-12.50**
–	0.4961	12.60	**XTP12-12.60**	**XTK12-12.60**	**XTN12-12.60**	**XTM12-12.60**
1/2	0.5000	12.70	**XTP12-12.70**	**XTK12-12.70**	**XTN12-12.70**	**XTM12-12.70**
–	0.5039	12.80	**XTP12-12.80**	**XTK12-12.80**	**XTN12-12.80**	**XTM12-12.80**
–	0.5079	12.90	**XTP12-12.90**	**XTK12-12.90**	**XTN12-12.90**	**XTM12-12.90**

Inserts sold in multiples of 1.

A20: 68 - 83
Key on A20: 1

A20: 6 - 9

Sizes not shown are available upon request. When ordering, please follow the example below:	
Imperial:	0.5180", Steel, 13 series = use Part No. **XTP13-13.16**
Metric:	13.16 mm, Steel, 13 series = use Part No. **XTP13-13.16**

GEN3SYS XT Pro Drill Insert Holders

12 Series | Diameter Range: 0.4724" - 0.5117" (12.00 mm - 12.99 mm)

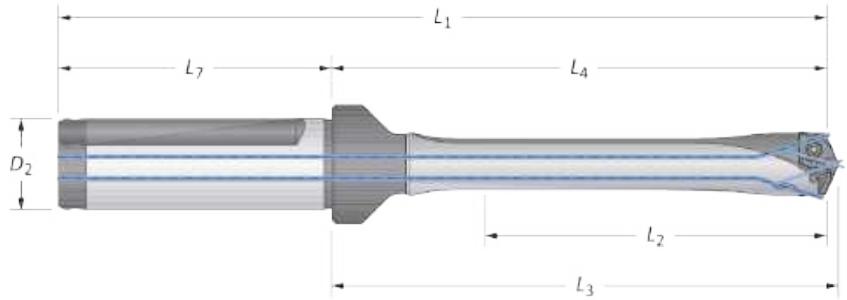

	Flute	Length	Body L_2	Body L_4	Body L_3	Body L_1	Shank L_7	Shank D_2	Shank Flat	Part No.
i	Straight	3xD	1-17/32	2-5/8	2-45/64	4-21/32	2-1/32	3/4	YES	HXT0312S-075F
		3xD	1-17/32	2-5/8	2-45/64	4-21/32	2-1/32	3/4	NO	HXT0312S-075C
		5xD	2-9/16	3-41/64	3-47/64	5-43/64	2-1/32	3/4	YES	HXT0512S-075F
		5xD	2-9/16	3-41/64	3-47/64	5-43/64	2-1/32	3/4	NO	HXT0512S-075C
		7xD	3-37/64	4-21/32	4-3/4	6-11/16	2-1/32	3/4	YES	HXT0712S-075F
		7xD	3-37/64	4-21/32	4-3/4	6-11/16	2-1/32	3/4	NO	HXT0712S-075C
		10xD	5-7/64	6-13/64	6-9/32	8-15/64	2-1/32	3/4	YES	⚠ HXT1012S-075F
		10xD	5-7/64	6-13/64	6-9/32	8-15/64	2-1/32	3/4	NO	⚠ HXT1012S-075C
		12xD	6-9/64	7-7/32	7-5/16	9-1/4	2-1/32	3/4	YES	⚠ HXT1212S-075F
		12xD	6-9/64	7-7/32	7-5/16	9-1/4	2-1/32	3/4	NO	⚠ HXT1212S-075C
m	Straight	3xD	39.0	66.6	68.7	116.6	50.0	20.0	YES	HXT0312S-20FM
		3xD	39.0	66.6	68.7	116.6	50.0	20.0	NO	HXT0312S-20CM
		5xD	65.0	92.5	94.7	142.5	50.0	20.0	YES	HXT0512S-20FM
		5xD	65.0	92.5	94.7	142.5	50.0	20.0	NO	HXT0512S-20CM
		7xD	90.9	118.3	120.7	168.3	50.0	20.0	YES	HXT0712S-20FM
		7xD	90.9	118.3	120.7	168.3	50.0	20.0	NO	HXT0712S-20CM
		10xD	129.9	157.5	159.7	207.5	50.0	20.0	YES	⚠ HXT1012S-20FM
		10xD	129.9	157.5	159.7	207.5	50.0	20.0	NO	⚠ HXT1012S-20CM
		12xD	156.0	183.5	185.7	233.5	50.0	20.0	YES	⚠ HXT1212S-20FM
		12xD	156.0	183.5	185.7	233.5	50.0	20.0	NO	⚠ HXT1212S-20CM

Connection Accessories

Insert Screws	Nylon Locking Screws	Insert Driver	Preset Torque Hand Driver	Replacement Tips	Admissible Tightening Torque*
7247-IP7-1	7247N-IP7-1	8IP-7	8IP-7TL	8IP-7B	7.4 in-lbs (84 N-cm)

*Tightening torques are calculated with a friction coefficient of μ = 0.14 and develop 90% of ultimate yield strength.

⚠ WARNING Refer to Speed and Feed charts for recommended adjustments to speeds and feeds. Refer to page A20: 86 for deep hole drilling guidelines in this section of the catalog. Visit **www.alliedmachine.com/DeepHoleGuidelines** for the most up-to-date information and procedures. Factory technical assistance is available for your specific applications through our Application Engineering Team.
ext: **7611** | *email:* **appeng@alliedmachine.com**

i = Imperial (in)
m = Metric (mm)
Screws sold in multiples of 10

GEN3SYS XT Drill Inserts

12 Series | Diameter Range: 0.4724" - 0.5117" (12.00 mm - 12.99 mm)

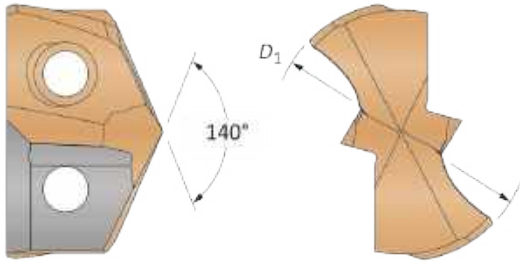

Insert							
Carbide Substrate	**Fractional Equivalent**	**D_1 inch**	**D_1 mm**	**Standard Part No.**	**Low Rake Part No.**	**Cast Iron Part No.**	**Stainless Part No.**
C1 (K35)	–	0.4724	12.00	**7C112P-12**	**7C112P-12LR**	–	–
	31/64	0.4844	12.30	**7C112P-.484**	**7C112P-.484LR**	–	–
	–	0.4921	12.50	**7C112P-12.5**	**7C112P-12.5LR**	–	–
	1/2	0.5000	12.70	**7C112P-0016**	**7C112P-0016LR**	–	–
C2 (K20)	–	0.4724	12.00	**7C212P-12**	**7C212P-12LR**	**7C212P-12CI**	**7C212P-12AS**
	31/64	0.4844	12.30	**7C212P-.484**	**7C212P-.484LR**	**7C212P-.484CI**	**7C212P-.484AS**
	–	0.4921	12.50	**7C212P-12.5**	**7C212P-12.5LR**	**7C212P-12.5CI**	**7C212P-12.5AS**
	1/2	0.5000	12.70	**7C212P-0016**	**7C212P-0016LR**	**7C212P-0016CI**	**7C212P-0016AS**

Inserts sold in multiples of 1.

A20: 68 - 83
Key on A20: 1

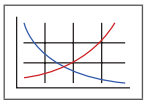

A20: 6 - 9

Sizes not shown are available upon request. When ordering, please follow the example below:	
Imperial:	0.5200", 13 series, C2 = use Part No. **7C213P-.5200**
Metric:	13.20 mm, 13 series, C2 = use Part No. **7C213P-13.20**

GEN3SYS Drill Insert Holders

12 Series | Diameter Range: 0.4724" - 0.5117" (12.00 mm - 12.99 mm)

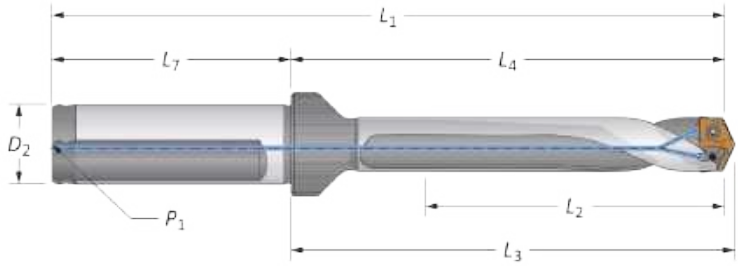

Straight and Helical

	Flute	Body Length	L_2	L_4	L_3	L_1	Shank L_7	D_2	P_1	Flat	Part No.
i	Straight	3xD	1-17/32	2-5/8	2-45/64	4-21/32	2-1/32	3/4	1/8	YES	**60312S-075F**
		5xD	2-9/16	3-41/64	3-47/64	5-43/64	2-1/32	3/4	1/8	YES	**60512S-075F**
		7xD	3-37/64	4-21/32	4-3/4	6-11/16	2-1/32	3/4	1/8	YES	**60712S-075F**
	Helical	Stub	5/8	1-45/64	1-25/32	3-47/64	2-1/32	3/4	1/8	YES	**60112H-075F**
		3xD	1-17/32	2-5/8	2-45/64	4-21/32	2-1/32	3/4	1/8	YES	**60312H-075F**
		3xD	1-17/32	2-5/8	2-45/64	4-21/32	2-1/32	3/4	1/8	NO	**60312H-075C**
		5xD	2-9/16	3-41/64	3-47/64	5-43/64	2-1/32	3/4	1/8	YES	**60512H-075F**
		5xD	2-9/16	3-41/64	3-47/64	5-43/64	2-1/32	3/4	1/8	NO	**60512H-075C**
		7xD	3-37/64	4-21/32	4-3/4	6-11/16	2-1/32	3/4	1/8	YES	**60712H-075F**
		7xD	3-37/64	4-21/32	4-3/4	6-11/16	2-1/32	3/4	1/8	NO	**60712H-075C**
m	Straight	3xD	39.0	66.6	68.7	116.6	50.0	20.0	1/8*	YES	**60312S-20FM**
		5xD	65.0	92.5	94.7	142.5	50.0	20.0	1/8*	YES	**60512S-20FM**
		7xD	90.9	118.3	120.7	168.3	50.0	20.0	1/8*	YES	**60712S-20FM**
	Helical	Stub	16.0	43.2	45.4	93.2	50.0	20.0	1/8*	YES	**60112H-20FM**
		3xD	39.0	66.6	68.7	116.6	50.0	20.0	1/8*	YES	**60312H-20FM**
		3xD	39.0	66.6	68.7	116.6	50.0	20.0	1/8*	NO	**60312H-20CM**
		5xD	65.0	92.5	94.7	142.5	50.0	20.0	1/8*	YES	**60512H-20FM**
		5xD	65.0	92.5	94.7	142.5	50.0	20.0	1/8*	NO	**60512H-20CM**
		7xD	90.9	118.3	120.7	168.3	50.0	20.0	1/8*	YES	**60712H-20FM**
		7xD	90.9	118.3	120.7	168.3	50.0	20.0	1/8*	NO	**60712H-20CM**

*Thread to BSP and ISO 7-1

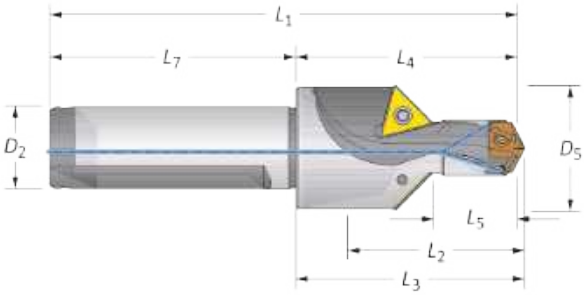

Drill / Chamfer

	Step D_5	L_5	Body L_2	L_4	L_3	L_1	Shank L_7	D_2	Part No.	Chamfer Insert
i	31/32	45/64	63/64	1-45/64	1-25/32	3-47/64	2-1/32	3/4	**60112C45-075F**	**TCMT-110204**
m	24.8	18.0	35.2	43.2	45.4	93.2	50.0	20.0	**60112C45-20FM**	**TCMT-110204**

Connection Accessories

Insert Screws	Nylon Locking Screws	Insert Driver	Preset Torque Hand Driver	Replacement Tips	Admissible Tightening Torque*
7247-IP7-1	**7247N-IP7-1**	**8IP-7**	**8IP-7TL**	**8IP-7B**	7.4 in-lbs (84 N-cm)

*Tightening torques are calculated with a friction coefficient of μ = 0.14 and develop 90% of ultimate yield strength.

i = Imperial (in)
m = Metric (mm)

Chamfer inserts sold separately in multiples of 10 | Screws sold in multiples of 10

GEN3SYS XT Pro Drill Inserts

13 Series | Diameter Range: 0.5118" - 0.5511" (13.00 mm - 13.99 mm)

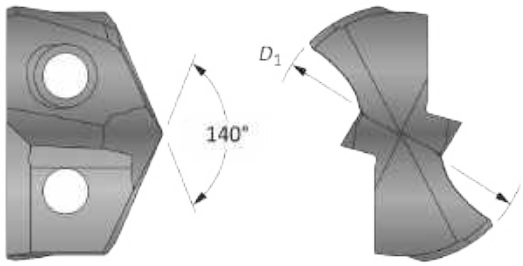

Insert			Part No.	Part No.	Part No.	Part No.
Fractional Equivalent	D_1 inch	D_1 mm	P	K	N	M
–	0.5118	13.00	**XTP13-13.00**	**XTK13-13.00**	**XTN13-13.00**	**XTM13-13.00**
33/64	0.5157	13.10	**XTP13-13.10**	**XTK13-13.10**	**XTN13-13.10**	**XTM13-13.10**
–	0.5197	13.20	**XTP13-13.20**	**XTK13-13.20**	**XTN13-13.20**	**XTM13-13.20**
–	0.5236	13.30	**XTP13-13.30**	**XTK13-13.30**	**XTN13-13.30**	**XTM13-13.30**
–	0.5276	13.40	**XTP13-13.40**	**XTK13-13.40**	**XTN13-13.40**	**XTM13-13.40**
17/32	0.5311	13.49	**XTP13-13.49**	**XTK13-13.49**	**XTN13-13.49**	**XTM13-13.49**
–	0.5315	13.50	**XTP13-13.50**	**XTK13-13.50**	**XTN13-13.50**	**XTM13-13.50**
–	0.5354	13.60	**XTP13-13.60**	**XTK13-13.60**	**XTN13-13.60**	**XTM13-13.60**
–	0.5394	13.70	**XTP13-13.70**	**XTK13-13.70**	**XTN13-13.70**	**XTM13-13.70**
–	0.5433	13.80	**XTP13-13.80**	**XTK13-13.80**	**XTN13-13.80**	**XTM13-13.80**
35/64	0.5469	13.89	**XTP13-13.89**	**XTK13-13.89**	**XTN13-13.89**	**XTM13-13.89**

Inserts sold in multiples of 1.

A20: 68 - 83
Key on A20: 1

A20: 6 - 9

Sizes not shown are available upon request. When ordering, please follow the example below:	
Imperial:	0.5180", Steel, 13 series = use Part No. **XTP13-13.16**
Metric:	13.16 mm, Steel, 13 series = use Part No. **XTP13-13.16**

GEN3SYS XT Pro Drill Insert Holders

13 Series | Diameter Range: 0.5118" - 0.5511" (13.00 mm - 13.99 mm)

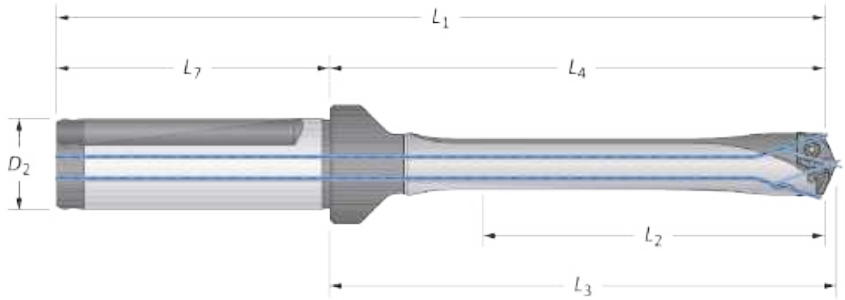

	Flute	Length	Body L_2	Body L_4	Body L_3	Body L_1	Shank L_7	Shank D_2	Shank Flat	Part No.
i	Straight	3xD	1-21/32	2-23/32	2-13/16	4-3/4	2-1/32	3/4	YES	HXT0313S-075F
		3xD	1-21/32	2-23/32	2-13/16	4-3/4	2-1/32	3/4	NO	HXT0313S-075C
		5xD	2-3/4	3-13/16	3-29/32	5-27/32	2-1/32	3/4	YES	HXT0513S-075F
		5xD	2-3/4	3-13/16	3-29/32	5-27/32	2-1/32	3/4	NO	HXT0513S-075C
		7xD	3-55/64	4-59/64	5-1/64	6-61/64	2-1/32	3/4	YES	HXT0713S-075F
		7xD	3-55/64	4-59/64	5-1/64	6-61/64	2-1/32	3/4	NO	HXT0713S-075C
		10xD	5-33/64	6-37/64	6-43/64	8-39/64	2-1/32	3/4	YES	⚠ HXT1013S-075F
		10xD	5-33/64	6-37/64	6-43/64	8-39/64	2-1/32	3/4	NO	⚠ HXT1013S-075C
		12xD	6-39/64	7-11/16	7-25/32	9-23/32	2-1/32	3/4	YES	⚠ HXT1213S-075F
		12xD	6-39/64	7-11/17	7-25/32	9-23/32	2-1/32	3/4	NO	⚠ HXT1213S-075C
m	Straight	3xD	42.0	69.0	71.4	119.0	50.0	20.0	YES	HXT0313S-20FM
		3xD	42.0	69.0	71.4	119.0	50.0	20.0	NO	HXT0313S-20CM
		5xD	69.9	96.8	99.2	146.8	50.0	20.0	YES	HXT0513S-20FM
		5xD	69.9	96.8	99.2	146.8	50.0	20.0	NO	HXT0513S-20CM
		7xD	98.0	125.0	127.4	175.0	50.0	20.0	YES	HXT0713S-20FM
		7xD	98.0	125.0	127.4	175.0	50.0	20.0	NO	HXT0713S-20CM
		10xD	140.0	167.0	169.4	217.0	50.0	20.0	YES	⚠ HXT1013S-20FM
		10xD	140.0	167.0	169.4	217.0	50.0	20.0	NO	⚠ HXT1013S-20CM
		12xD	168.0	195.2	197.4	245.2	50.0	20.0	YES	⚠ HXT1213S-20FM
		12xD	168.0	195.2	197.4	245.2	50.0	20.0	NO	⚠ HXT1213S-20CM

Connection Accessories

Insert Screws	Nylon Locking Screws	Insert Driver	Preset Torque Hand Driver	Replacement Tips	Admissible Tightening Torque*
7247-IP7-1	7247N-IP7-1	**8IP-7**	**8IP-7TL**	**8IP-7B**	7.4 in-lbs (84 N-cm)

*Tightening torques are calculated with a friction coefficient of μ = 0.14 and develop 90% of ultimate yield strength.

⚠ WARNING Refer to Speed and Feed charts for recommended adjustments to speeds and feeds. Refer to page A20: 86 for deep hole drilling guidelines in this section of the catalog. Visit **www.alliedmachine.com/DeepHoleGuidelines** for the most up-to-date information and procedures. Factory technical assistance is available for your specific applications through our Application Engineering Team.
ext: **7611** | *email:* **appeng@alliedmachine.com**

i = Imperial (in)
m = Metric (mm)
Screws sold in multiples of 10

GEN3SYS XT Drill Inserts

13 Series | Diameter Range: 0.5118" - 0.5511" (13.00 mm - 13.99 mm)

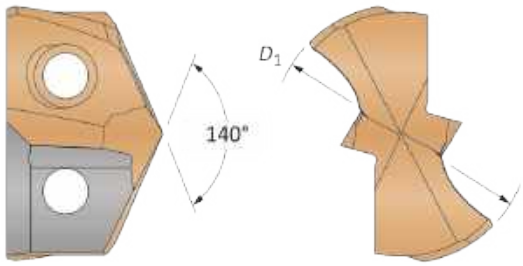

Insert							
Carbide Substrate	**Fractional Equivalent**	**D_1 inch**	**D_1 mm**	**Standard Part No.**	**Low Rake Part No.**	**Cast Iron Part No.**	**Stainless Part No.**
C1 (K35)	–	0.5118	13.00	**7C113P-13**	**7C113P-13LR**	–	–
	33/64	0.5156	13.08	**7C113P-.515**	**7C113P-.515LR**	–	–
	17/32	0.5313	13.49	**7C113P-0017**	**7C113P-0017LR**	–	–
	–	0.5315	13.50	**7C113P-13.5**	**7C113P-13.5LR**	–	–
	35/64	0.5469	13.89	**7C113P-.546**	**7C113P-.546LR**	–	–
C2 (K20)	–	0.5118	13.00	**7C213P-13**	**7C213P-13LR**	**7C213P-13CI**	**7C213P-13AS**
	33/64	0.5156	13.08	**7C213P-.515**	**7C213P-.515LR**	**7C213P-.515CI**	**7C213P-.515AS**
	17/32	0.5312	13.49	**7C213P-0017**	**7C213P-0017LR**	**7C213P-0017CI**	**7C213P-0017AS**
	–	0.5315	13.50	**7C213P-13.5**	**7C213P-13.5LR**	**7C213P-13.5CI**	**7C213P-13.5AS**
	35/64	0.5469	13.89	**7C213P-.546**	**7C213P-.546LR**	**7C213P-.546CI**	**7C213P-.546AS**

Inserts sold in multiples of 1.

A20: 68 - 83
Key on A20: 1

A20: 6 - 9

Sizes not shown are available upon request. When ordering, please follow the example below:	
Imperial:	0.5200", 13 series, C2 = use Part No. **7C213P-.5200**
Metric:	13.20 mm, 13 series, C2 = use Part No. **7C213P-13.20**

GEN3SYS Drill Insert Holders

13 Series | Diameter Range: 0.5118" - 0.5511" (13.00 mm - 13.99 mm)

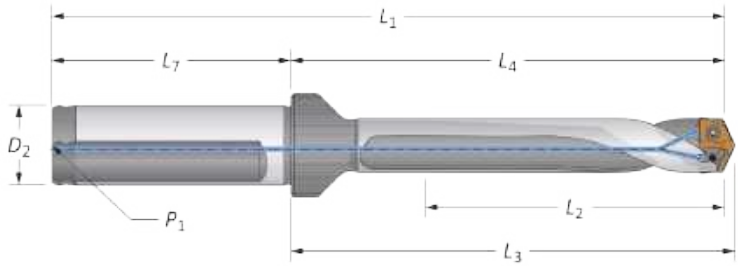

Straight and Helical

	Flute	Body Length	L_2	L_4	L_3	L_1	Shank L_7	D_2	P_1	Flat	Part No.
i	Straight	3xD	1-21/32	2-23/32	2-13/16	4-3/4	2-1/32	3/4	1/8	YES	**60313S-075F**
		5xD	2-3/4	3-13/16	3-29/32	5-27/32	2-1/32	3/4	1/8	YES	**60513S-075F**
		7xD	3-55/64	4-59/64	5-1/64	6-61/64	2-1/32	3/4	1/8	YES	**60713S-075F**
	Helical	Stub	5/8	1-11/16	1-25/32	3-23/32	2-1/32	3/4	1/8	YES	**60113H-075F**
		3xD	1-21/32	2-23/32	2-13/16	4-3/4	2-1/32	3/4	1/8	YES	**60313H-075F**
		3xD	1-21/32	2-23/32	2-13/16	4-3/4	2-1/32	3/4	1/8	NO	**60313H-075C**
		5xD	2-3/4	3-13/16	3-29/32	5-27/32	2-1/32	3/4	1/8	YES	**60513H-075F**
		5xD	2-3/4	3-13/16	3-29/32	5-27/32	2-1/32	3/4	1/8	NO	**60513H-075C**
		7xD	3-55/64	4-59/64	5-1/64	6-61/64	2-1/32	3/4	1/8	YES	**60713H-075F**
		7xD	3-55/64	4-59/64	5-1/64	6-61/64	2-1/32	3/4	1/8	NO	**60713H-075C**
m	Straight	3xD	42.0	69.0	71.4	119.0	50.0	20.0	1/8*	YES	**60313S-20FM**
		5xD	69.9	96.8	99.2	146.8	50.0	20.0	1/8*	YES	**60513S-20FM**
		7xD	98.0	125.0	127.4	175.0	50.0	20.0	1/8*	YES	**60713S-20FM**
	Helical	Stub	16.0	43.0	45.2	93.0	50.0	20.0	1/8*	YES	**60113H-20FM**
		3xD	42.0	69.0	71.4	119.0	50.0	20.0	1/8*	YES	**60313H-20FM**
		3xD	42.0	69.0	71.4	119.0	50.0	20.0	1/8*	NO	**60313H-20CM**
		5xD	69.9	96.8	99.2	146.8	50.0	20.0	1/8*	YES	**60513H-20FM**
		5xD	69.9	96.8	99.2	146.8	50.0	20.0	1/8*	NO	**60513H-20CM**
		7xD	98.0	125.0	127.4	175.0	50.0	20.0	1/8*	YES	**60713H-20FM**
		7xD	98.0	125.0	127.4	175.0	50.0	20.0	1/8*	NO	**60713H-20CM**

*Thread to BSP and ISO 7-1

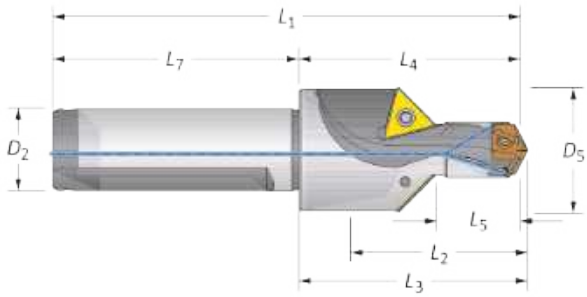

Drill / Chamfer

	Step D_5	L_5	Body L_2	L_4	L_3	L_1	Shank L_7	D_2	Part No.	Chamfer Insert
i	1-1/64	49/64	1	1-11/16	1-25/32	3-23/32	2-1/32	3/4	**60113C45-075F**	**TCMT-110204**
m	25.8	19.5	25.4	43.0	45.2	93.0	50.0	20.0	**60113C45-20FM**	**TCMT-110204**

Connection Accessories

Insert Screws	Nylon Locking Screws	Insert Driver	Preset Torque Hand Driver	Replacement Tips	Admissible Tightening Torque*
7247-IP7-1	**7247N-IP7-1**	**8IP-7**	**8IP-7TL**	**8IP-7B**	7.4 in-lbs (84 N-cm)

*Tightening torques are calculated with a friction coefficient of μ = 0.14 and develop 90% of ultimate yield strength.

i = Imperial (in)
m = Metric (mm)

Chamfer inserts sold separately in multiples of 10 | Screws sold in multiples of 10

GEN3SYS XT Pro Drill Inserts

14 Series | Diameter Range: 0.5512" - 0.5905" (14.00 mm - 14.99 mm)

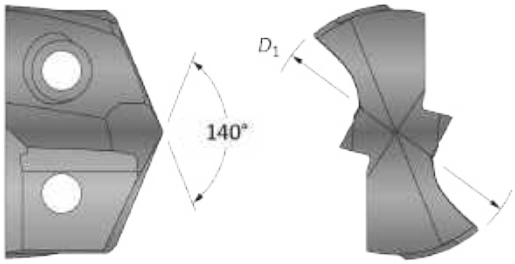

Insert						
Fractional Equivalent	D_1 inch	D_1 mm	Part No.	Part No.	Part No.	Part No.
			P	K	N	M
–	0.5512	14.00	**XTP14-14.00**	**XTK14-14.00**	**XTN14-14.00**	**XTM14-14.00**
–	0.5551	14.10	**XTP14-14.10**	**XTK14-14.10**	**XTN14-14.10**	**XTM14-14.10**
–	0.5591	14.20	**XTP14-14.20**	**XTK14-14.20**	**XTN14-14.20**	**XTM14-14.20**
9/16	0.5626	14.29	**XTP14-14.29**	**XTK14-14.29**	**XTN14-14.29**	**XTM14-14.29**
–	0.5669	14.40	**XTP14-14.40**	**XTK14-14.40**	**XTN14-14.40**	**XTM14-14.40**
–	0.5709	14.50	**XTP14-14.50**	**XTK14-14.50**	**XTN14-14.50**	**XTM14-14.50**
–	0.5748	14.60	**XTP14-14.60**	**XTK14-14.60**	**XTN14-14.60**	**XTM14-14.60**
37/64	0.5780	14.68	**XTP14-14.68**	**XTK14-14.68**	**XTN14-14.68**	**XTM14-14.68**
–	0.5827	14.80	**XTP14-14.80**	**XTK14-14.80**	**XTN14-14.80**	**XTM14-14.80**
–	0.5866	14.90	**XTP14-14.90**	**XTK14-14.90**	**XTN14-14.90**	**XTM14-14.90**

Inserts sold in multiples of 1.

A20: 68 - 83
Key on A20: 1

A20: 6 - 9

Sizes not shown are available upon request. When ordering, please follow the example below:	
Imperial:	0.5180", Steel, 13 series = use Part No. **XTP13-13.16**
Metric:	13.16 mm, Steel, 13 series = use Part No. **XTP13-13.16**

GEN3SYS XT Pro Drill Insert Holders

14 Series | Diameter Range: 0.5512" - 0.5905" (14.00 mm - 14.99 mm)

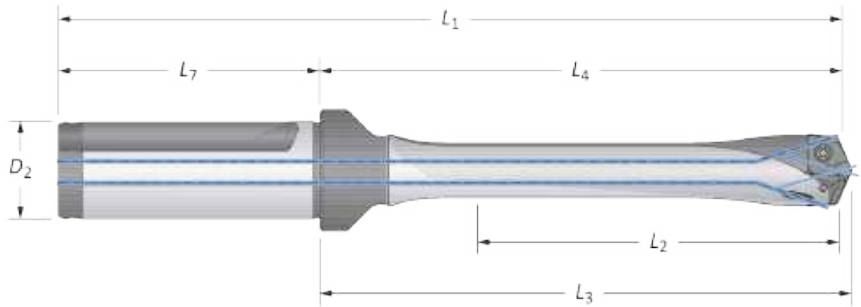

	Flute	Length	Body L_2	Body L_4	Body L_3	Body L_1	Shank L_7	Shank D_2	Shank Flat	Part No.
i	Straight	3xD	1-49/64	2-27/32	2-61/64	4-7/8	2-1/32	3/4	YES	**HXT0314S-075F**
		3xD	1-49/64	2-27/32	2-61/64	4-7/8	2-1/32	3/4	NO	**HXT0314S-075C**
		5xD	2-61/64	4-1/32	4-1/8	6-1/16	2-1/32	3/4	YES	**HXT0514S-075F**
		5xD	2-61/64	4-1/32	4-1/8	6-1/16	2-1/32	3/4	NO	**HXT0514S-075C**
		7xD	4-1/8	5-13/64	5-5/16	7-15/64	2-1/32	3/4	YES	**HXT0714S-075F**
		7xD	4-1/8	5-13/64	5-5/16	7-15/64	2-1/32	3/4	NO	**HXT0714S-075C**
		10xD	5-29/32	6-63/64	7-5/64	9-1/64	2-1/32	3/4	YES	⚠ **HXT1014S-075F**
		10xD	5-29/32	6-63/64	7-5/64	9-1/64	2-1/32	3/4	NO	⚠ **HXT1014S-075C**
		12xD	7-3/32	8-5/32	8-1/4	10-3/16	2-1/32	3/4	YES	⚠ **HXT1214S-075F**
		12xD	7-3/32	8-5/32	8-1/4	10-3/16	2-1/32	3/4	NO	⚠ **HXT1214S-075C**
m	Straight	3xD	44.8	72.2	74.9	122.2	50.0	20.0	YES	**HXT0314S-20FM**
		3xD	44.8	72.2	74.9	122.2	50.0	20.0	NO	**HXT0314S-20CM**
		5xD	75.0	102.4	104.9	152.4	50.0	20.0	YES	**HXT0514S-20FM**
		5xD	75.0	102.4	104.9	152.4	50.0	20.0	NO	**HXT0514S-20CM**
		7xD	104.8	132.2	134.8	182.2	50.0	20.0	YES	**HXT0714S-20FM**
		7xD	104.8	132.2	134.8	182.2	50.0	20.0	NO	**HXT0714S-20CM**
		10xD	149.9	177.4	179.8	227.4	50.0	20.0	YES	⚠ **HXT1014S-20FM**
		10xD	149.9	177.4	179.8	227.4	50.0	20.0	NO	⚠ **HXT1014S-20CM**
		12xD	180.0	207.2	209.8	257.2	50.0	20.0	YES	⚠ **HXT1214S-20FM**
		12xD	180.0	207.2	209.8	257.2	50.0	20.0	NO	⚠ **HXT1214S-20CM**

Connection Accessories

Insert Screws	Nylon Locking Screws	Insert Driver	Preset Torque Hand Driver	Replacement Tips	Admissible Tightening Torque*
7247-IP7-1	**7247N-IP7-1**	**8IP-7**	**8IP-7TL**	**8IP-7B**	7.4 in-lbs (84 N-cm)

*Tightening torques are calculated with a friction coefficient of μ = 0.14 and develop 90% of ultimate yield strength.

⚠ WARNING Refer to Speed and Feed charts for recommended adjustments to speeds and feeds. Refer to page A20: 86 for deep hole drilling guidelines in this section of the catalog. Visit **www.alliedmachine.com/DeepHoleGuidelines** for the most up-to-date information and procedures. Factory technical assistance is available for your specific applications through our Application Engineering Team.
ext: **7611** | *email:* **appeng@alliedmachine.com**

i = Imperial (in)
m = Metric (mm)
Screws sold in multiples of 10

GEN3SYS XT Drill Inserts

14 Series | Diameter Range: 0.5512" - 0.5905" (14.00 mm - 14.99 mm)

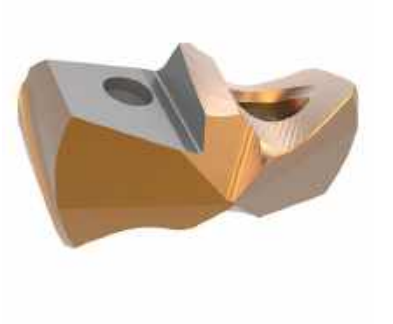

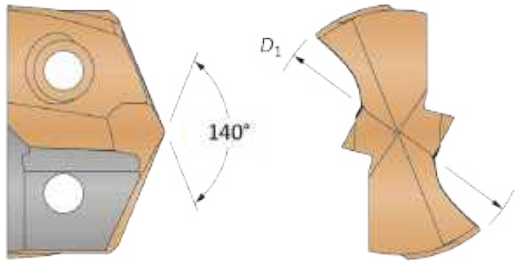

Insert							
Carbide Substrate	**Fractional Equivalent**	**D_1 inch**	**D_1 mm**	**Standard Part No.**	**Low Rake Part No.**	**Cast Iron Part No.**	**Stainless Part No.**
C1 (K35)	–	0.5512	14.00	**7C114P-14**	**7C114P-14LR**	–	–
	9/16	0.5625	14.29	**7C114P-0018**	**7C114P-0018LR**	–	–
	–	0.5709	14.50	**7C114P-14.5**	**7C114P-14.5LR**	–	–
	37/64	0.5781	14.68	**7C114P-.578**	**7C114P-.578LR**	–	–
	–	0.5827	14.80	**7C114P-14.8**	**7C114P-14.8LR**	–	–
C2 (K20)	–	0.5512	14.00	**7C214P-14**	**7C214P-14LR**	**7C214P-14CI**	**7C214P-14AS**
	9/16	0.5625	14.29	**7C214P-0018**	**7C214P-0018LR**	**7C214P-0018CI**	**7C214P-0018AS**
	–	0.5709	14.50	**7C214P-14.5**	**7C214P-14.5LR**	**7C214P-14.5CI**	**7C214P-14.5AS**
	37/64	0.5781	14.68	**7C214P-.578**	**7C214P-.578LR**	**7C214P-.578CI**	**7C214P-.578AS**
	–	0.5827	14.80	**7C214P-14.8**	**7C214P-14.8LR**	**7C214P-14.8CI**	**7C214P-14.8AS**

Inserts sold in multiples of 1.

A20: 68 - 83
Key on A20: 1
A20: 6 - 9

Sizes not shown are available upon request. When ordering, please follow the example below:	
Imperial:	0.5200", 13 series, C2 = use Part No. **7C213P-.5200**
Metric:	13.20 mm, 13 series, C2 = use Part No. **7C213P-13.20**

GEN3SYS Drill Insert Holders

14 Series | Diameter Range: 0.5512" - 0.5905" (14.00 mm - 14.99 mm)

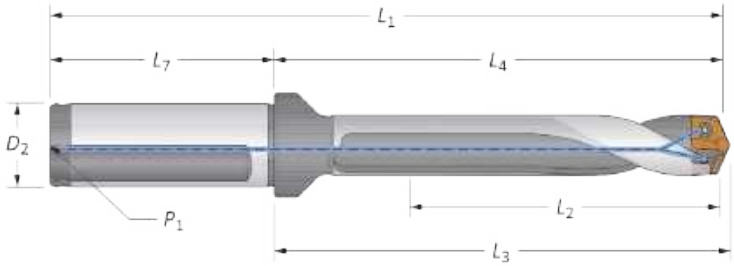

Straight and Helical

	Flute	Length	Body L_2	Body L_4	Body L_3	Body L_1	Shank L_7	Shank D_2	Shank P_1	Flat	Part No.
i	Straight	3xD	1-49/64	2-27/32	2-61/64	4-7/8	2-1/32	3/4	1/8	YES	**60314S-075F**
		5xD	2-61/64	4-1/32	4-1/8	6-1/16	2-1/32	3/4	1/8	YES	**60514S-075F**
		7xD	4-1/8	5-13/64	5-5/16	7-15/64	2-1/32	3/4	1/8	YES	**60714S-075F**
	Helical	Stub	11/16	1-3/4	1-55/64	3-25/32	2-1/32	3/4	1/8	YES	**60114H-075F**
		3xD	1-49/64	2-27/32	2-61/64	4-7/8	2-1/32	3/4	1/8	YES	**60314H-075F**
		3xD	1-49/64	2-27/32	2-61/64	4-7/8	2-1/32	3/4	1/8	NO	**60314H-075C**
		5xD	2-61/64	4-1/32	4-1/8	6-1/16	2-1/32	3/4	1/8	YES	**60514H-075F**
		5xD	2-61/64	4-1/32	4-1/8	6-1/16	2-1/32	3/4	1/8	NO	**60514H-075C**
		7xD	4-1/8	5-13/64	5-5/16	7-15/64	2-1/32	3/4	1/8	YES	**60714H-075F**
		7xD	4-1/8	5-13/64	5-5/16	7-15/64	2-1/32	3/4	1/8	NO	**60714H-075C**
m	Straight	3xD	44.8	72.2	74.9	122.2	50.0	20.0	1/8*	YES	**60314S-20FM**
		5xD	75.0	102.4	104.9	152.4	50.0	20.0	1/8*	YES	**60514S-20FM**
		7xD	104.8	132.2	134.8	182.2	50.0	20.0	1/8*	YES	**60714S-20FM**
	Helical	Stub	17.5	44.5	47.2	94.5	50.0	20.0	1/8*	YES	**60114H-20FM**
		3xD	44.8	72.2	74.9	122.2	50.0	20.0	1/8*	YES	**60314H-20FM**
		3xD	44.8	72.2	74.9	122.2	50.0	20.0	1/8*	NO	**60314H-20CM**
		5xD	75.0	102.4	104.9	152.4	50.0	20.0	1/8*	YES	**60514H-20FM**
		5xD	75.0	102.4	104.9	152.4	50.0	20.0	1/8*	NO	**60514H-20CM**
		7xD	104.8	132.2	134.8	182.2	50.0	20.0	1/8*	YES	**60714H-20FM**
		7xD	104.8	132.2	134.8	182.2	50.0	20.0	1/8*	NO	**60714H-20CM**

*Thread to BSP and ISO 7-1

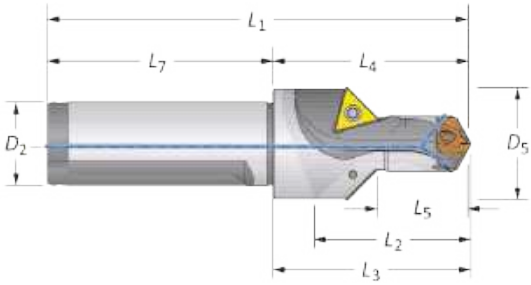

Drill / Chamfer

	Step D_5	Step L_5	Body L_2	Body L_4	Body L_3	Body L_1	Shank L_7	Shank D_2	Part No.	Chamfer Insert
i	1-3/64	53/64	1-3/64	1-3/4	1-55/64	3-25/32	2-1/32	3/4	**60114C45-075F**	**TCMT-110204**
m	26.7	21.0	26.8	44.6	47.2	94.6	50.0	20.0	**60114C45-20FM**	**TCMT-110204**

Connection Accessories

Insert Screws	Nylon Locking Screws	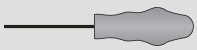 Insert Driver	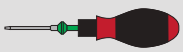 Preset Torque Hand Driver	Replacement Tips	Admissible Tightening Torque*
7247-IP7-1	**7247N-IP7-1**	**8IP-7**	**8IP-7TL**	**8IP-7B**	7.4 in-lbs (84 N-cm)

*Tightening torques are calculated with a friction coefficient of μ = 0.14 and develop 90% of ultimate yield strength.

i = Imperial (in)
m = Metric (mm)

Chamfer inserts sold separately in multiples of 10 | Screws sold in multiples of 10

GEN3SYS XT Pro Drill Inserts

15 Series | Diameter Range: 0.5906" - 0.6298" (15.00 mm - 15.99 mm)

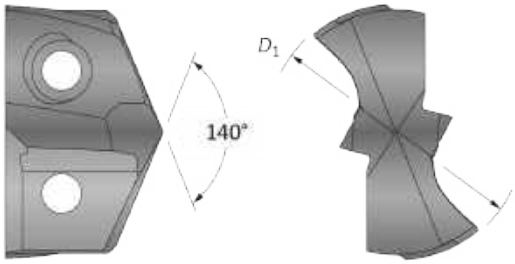

Insert						
Fractional Equivalent	D_1 inch	D_1 mm	Part No.	Part No.	Part No.	Part No.
			P	K	N	M
–	0.5906	15.00	**XTP15-15.00**	**XTK15-15.00**	**XTN15-15.00**	**XTM15-15.00**
19/32	0.5937	15.08	**XTP15-15.08**	**XTK15-15.08**	**XTN15-15.08**	**XTM15-15.08**
–	0.5984	15.20	**XTP15-15.20**	**XTK15-15.20**	**XTN15-15.20**	**XTM15-15.20**
–	0.6024	15.30	**XTP15-15.30**	**XTK15-15.30**	**XTN15-15.30**	**XTM15-15.30**
–	0.6063	15.40	**XTP15-15.40**	**XTK15-15.40**	**XTN15-15.40**	**XTM15-15.40**
39/64	0.6094	15.48	**XTP15-15.48**	**XTK15-15.48**	**XTN15-15.48**	**XTM15-15.48**
–	0.6102	15.50	**XTP15-15.50**	**XTK15-15.50**	**XTN15-15.50**	**XTM15-15.50**
–	0.6142	15.60	**XTP15-15.60**	**XTK15-15.60**	**XTN15-15.60**	**XTM15-15.60**
–	0.6181	15.70	**XTP15-15.70**	**XTK15-15.70**	**XTN15-15.70**	**XTM15-15.70**
–	0.6220	15.80	**XTP15-15.80**	**XTK15-15.80**	**XTN15-15.80**	**XTM15-15.80**
5/8	0.6252	15.88	**XTP15-15.88**	**XTK15-15.88**	**XTN15-15.88**	**XTM15-15.88**

Inserts sold in multiples of 1.

A20: 68 - 83
Key on A20: 1

A20: 6 - 9

Sizes not shown are available upon request. When ordering, please follow the example below:	
Imperial:	0.5180", Steel, 13 series = use Part No. **XTP13-13.16**
Metric:	13.16 mm, Steel, 13 series = use Part No. **XTP13-13.16**

GEN3SYS XT Pro Drill Insert Holders

15 Series | Diameter Range: 0.5906" - 0.6298" (15.00 mm - 15.99 mm)

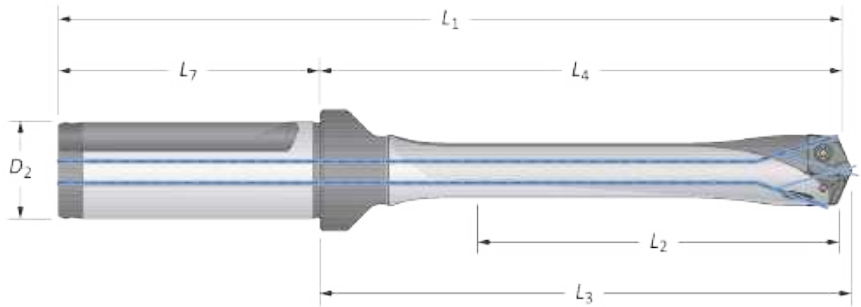

	Flute	Body Length	L_2	L_4	L_3	L_1	Shank L_7	D_2	Flat	Part No.
i	Straight	3xD	1-57/64	2-61/64	3-3/64	4-63/64	2-1/32	3/4	YES	HXT0315S-075F
		3xD	1-57/64	2-61/64	3-3/64	4-63/64	2-1/32	3/4	NO	HXT0315S-075C
		5xD	3-9/64	4-13/64	4-5/16	6-15/64	2-1/32	3/4	YES	HXT0515S-075F
		5xD	3-9/64	4-13/64	4-5/16	6-15/64	2-1/32	3/4	NO	HXT0515S-075C
		7xD	4-13/32	5-15/32	5-37/64	7-1/2	2-1/32	3/4	YES	HXT0715S-075F
		7xD	4-13/32	5-15/32	5-37/64	7-1/2	2-1/32	3/4	NO	HXT0715S-075C
		10xD	6-19/64	7-23/64	7-29/64	9-25/64	2-1/32	3/4	YES	⚠ HXT1015S-075F
		10xD	6-19/64	7-23/64	7-29/64	9-25/64	2-1/32	3/4	NO	⚠ HXT1015S-075C
		12xD	7-9/16	8-39/64	8-23/32	10-41/64	2-1/32	3/4	YES	⚠ HXT1215S-075F
		12xD	7-9/16	8-39/64	8-21/32	10-41/64	2-1/32	3/4	NO	⚠ HXT1215S-075C
m	Straight	3xD	48.0	75.0	77.5	125.0	50.0	20.0	YES	HXT0315S-20FM
		3xD	48.0	75.0	77.5	125.0	50.0	20.0	NO	HXT0315S-20CM
		5xD	79.8	106.8	109.5	156.8	50.0	20.0	YES	HXT0515S-20FM
		5xD	79.8	106.8	109.5	156.8	50.0	20.0	NO	HXT0515S-20CM
		7xD	111.9	138.9	141.5	188.9	50.0	20.0	YES	HXT0715S-20FM
		7xD	111.9	138.9	141.5	188.9	50.0	20.0	NO	HXT0715S-20CM
		10xD	159.9	186.9	189.5	236.9	50.0	20.0	YES	⚠ HXT1015S-20FM
		10xD	159.9	186.9	189.5	236.9	50.0	20.0	NO	⚠ HXT1015S-20CM
		12xD	192.0	219.0	221.6	269.0	50.0	20.0	YES	⚠ HXT1215S-20FM
		12xD	192.0	219.0	221.6	269.0	50.0	20.0	NO	⚠ HXT1215S-20CM

Connection Accessories

Insert Screws	Nylon Locking Screws	Insert Driver	Preset Torque Hand Driver	Replacement Tips	Admissible Tightening Torque*
7247-IP7-1	7247N-IP7-1	8IP-7	8IP-7TL	8IP-7B	7.4 in-lbs (84 N-cm)

*Tightening torques are calculated with a friction coefficient of μ = 0.14 and develop 90% of ultimate yield strength.

⚠ WARNING Refer to Speed and Feed charts for recommended adjustments to speeds and feeds. Refer to page A20: 86 for deep hole drilling guidelines in this section of the catalog. Visit **www.alliedmachine.com/DeepHoleGuidelines** for the most up-to-date information and procedures. Factory technical assistance is available for your specific applications through our Application Engineering Team.
ext: **7611** | *email:* **appeng@alliedmachine.com**

i = Imperial (in)
m = Metric (mm)
Screws sold in multiples of 10

GEN3SYS XT Drill Inserts

15 Series | Diameter Range: 0.5906" - 0.6298" (15.00 mm - 15.99 mm)

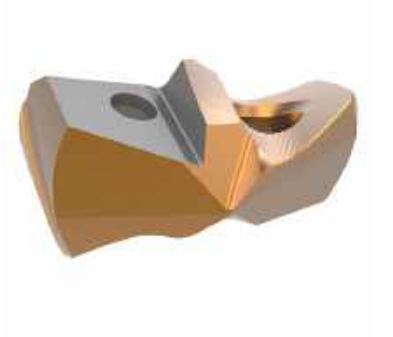

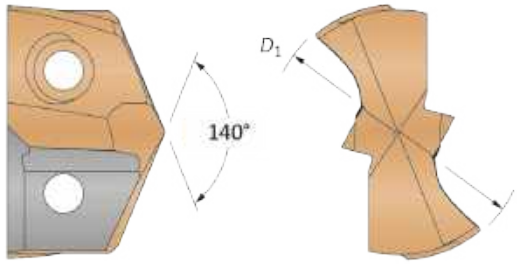

Insert							
Carbide Substrate	Fractional Equivalent	D_1 inch	D_1 mm	Standard Part No.	Low Rake Part No.	Cast Iron Part No.	Stainless Part No.
C1 (K35)	–	0.5906	15.00	**7C115P-15**	**7C115P-15LR**	–	–
	19/32	0.5938	15.08	**7C115P-0019**	**7C115P-0019LR**	–	–
	–	0.6004	15.25	**7C115P-15.25**	**7C115P-15.25LR**	–	–
	39/64	0.6094	15.48	**7C115P-.609**	**7C115P-.609LR**	–	–
	–	0.6103	15.50	**7C115P-15.5**	**7C115P-15.5LR**	–	–
	–	0.6181	15.70	**7C115P-.618**	**7C115P-.618LR**	–	–
	5/8	0.6250	15.88	**7C115P-0020**	**7C115P-0020LR**	–	–
C2 (K20)	–	0.5906	15.00	**7C215P-15**	**7C215P-15LR**	**7C215P-15CI**	**7C215P-15AS**
	19/32	0.5938	15.08	**7C215P-0019**	**7C215P-0019LR**	**7C215P-0019CI**	**7C215P-0019AS**
	–	0.6004	15.25	**7C215P-15.25**	**7C215P-15.25LR**	**7C215P-15.25CI**	**7C215P-15.25AS**
	39/64	0.6094	15.48	**7C215P-.609**	**7C215P-.609LR**	**7C215P-.609CI**	**7C215P-.609AS**
	–	0.6103	15.50	**7C215P-15.5**	**7C215P-15.5LR**	**7C215P-15.5CI**	**7C215P-15.5AS**
	–	0.6181	15.70	**7C215P-.618**	**7C215P-.618LR**	**7C215P-.618CI**	**7C215P-.618AS**
	5/8	0.6250	15.88	**7C215P-0020**	**7C215P-0020LR**	**7C215P-0020CI**	**7C215P-0020AS**

Inserts sold in multiples of 1.

A20: 68 - 83
Key on A20: 1

A20: 6 - 9

Sizes not shown are available upon request. When ordering, please follow the example below:	
Imperial:	0.5200", 13 series, C2 = use Part No. **7C213P-.5200**
Metric:	13.20 mm, 13 series, C2 = use Part No. **7C213P-13.20**

GEN3SYS Drill Insert Holders

15 Series | Diameter Range: 0.5906" - 0.6298" (15.00 mm - 15.99 mm)

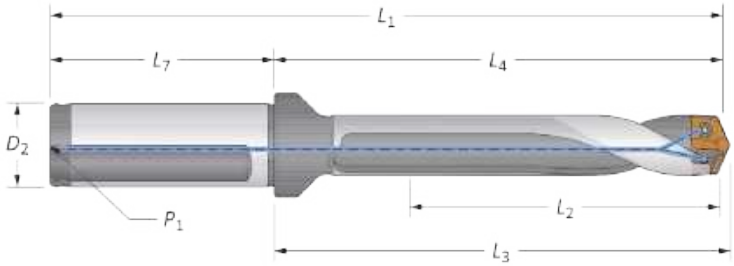

Straight and Helical

	Flute	Body Length	L_2	L_4	L_3	L_1	Shank L_7	D_2	P_1	Flat	Part No.
i	Straight	3xD	1-57/64	2-61/64	3-3/64	4-63/64	2-1/32	3/4	1/8	YES	**60315S-075F**
		5xD	3-9/64	4-13/64	4-5/16	6-15/64	2-1/32	3/4	1/8	YES	**60515S-075F**
		7xD	4-13/32	5-15/32	5-37/64	7-1/2	2-1/32	3/4	1/8	YES	**60715S-075F**
	Helical	Stub	11/16	1-3/4	1-27/32	3-25/32	2-1/32	3/4	1/8	YES	**60115H-075F**
		3xD	1-57/64	2-61/64	3-3/64	4-63/64	2-1/32	3/4	1/8	YES	**60315H-075F**
		3xD	1-57/64	2-61/64	3-3/64	4-63/64	2-1/32	3/4	1/8	NO	**60315H-075C**
		5xD	3-9/64	4-13/64	4-5/16	6-15/64	2-1/32	3/4	1/8	YES	**60515H-075F**
		5xD	3-9/64	4-13/64	4-5/16	6-15/64	2-1/32	3/4	1/8	NO	**60515H-075C**
		7xD	4-13/32	5-15/32	5-37/64	7-1/2	2-1/32	3/4	1/8	YES	**60715H-075F**
		7xD	4-13/32	5-15/32	5-37/64	7-1/2	2-1/32	3/4	1/8	NO	**60715H-075C**
m	Straight	3xD	48.0	75.0	77.5	125.0	50.0	20.0	1/8*	YES	**60315S-20FM**
		5xD	79.8	106.8	109.5	156.8	50.0	20.0	1/8*	YES	**60515S-20FM**
		7xD	111.9	138.9	141.5	188.9	50.0	20.0	1/8*	YES	**60715S-20FM**
	Helical	Stub	17.5	44.5	46.8	94.5	50.0	20.0	1/8*	YES	**60115H-20FM**
		3xD	48.0	75.0	77.5	125.0	50.0	20.0	1/8*	YES	**60315H-20FM**
		3xD	48.0	75.0	77.5	125.0	50.0	20.0	1/8*	NO	**60315H-20CM**
		5xD	79.8	106.8	109.5	156.8	50.0	20.0	1/8*	YES	**60515H-20FM**
		5xD	79.8	106.8	109.5	156.8	50.0	20.0	1/8*	NO	**60515H-20CM**
		7xD	111.9	138.9	141.5	188.9	50.0	20.0	1/8*	YES	**60715H-20FM**
		7xD	111.9	138.9	141.5	188.9	50.0	20.0	1/8*	NO	**60715H-20CM**

*Thread to BSP and ISO 7-1

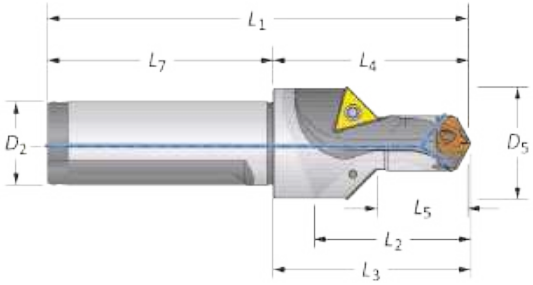

Drill / Chamfer

	Step D_5	Step L_5	Body L_2	L_4	L_3	L_1	Shank L_7	D_2	Part No.	Chamfer Insert
i	1-1/16	57/64	1-1/16	1-47/64	1-27/32	3-49/64	2-1/32	3/4	**60115C45-075F**	**TCMT-110204**
m	27.0	22.5	26.9	44.3	46.8	94.3	50.0	20.0	**60115C45-20FM**	**TCMT-110204**

Connection Accessories

Insert Screws	Nylon Locking Screws	Insert Driver	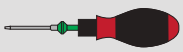 Preset Torque Hand Driver	Replacement Tips	Admissible Tightening Torque*
7247-IP7-1	**7247N-IP7-1**	**8IP-7**	**8IP-7TL**	**8IP-7B**	7.4 in-lbs (84 N-cm)

*Tightening torques are calculated with a friction coefficient of μ = 0.14 and develop 90% of ultimate yield strength.

i = Imperial (in)
m = Metric (mm)

Chamfer inserts sold separately in multiples of 10 | Screws sold in multiples of 10

GEN3SYS XT Pro Drill Inserts

16 Series | Diameter Range: 0.6299" - 0.6692" (16.00 mm - 16.99 mm)

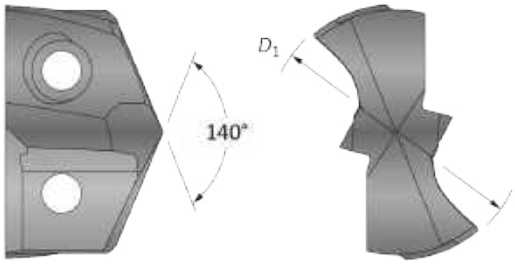

Insert						
Fractional Equivalent	D_1 inch	D_1 mm	Part No. P	Part No. K	Part No. N	Part No. M
–	0.6299	16.00	**XTP16-16.00**	**XTK16-16.00**	**XTN16-16.00**	**XTM16-16.00**
–	0.6331	16.08	**XTP16-16.08**	**XTK16-16.08**	**XTN16-16.08**	**XTM16-16.08**
–	0.6378	16.20	**XTP16-16.20**	**XTK16-16.20**	**XTN16-16.20**	**XTM16-16.20**
41/64	0.6406	16.27	**XTP16-16.27**	**XTK16-16.27**	**XTN16-16.27**	**XTM16-16.27**
–	0.6457	16.40	**XTP16-16.40**	**XTK16-16.40**	**XTN16-16.40**	**XTM16-16.40**
–	0.6496	16.50	**XTP16-16.50**	**XTK16-16.50**	**XTN16-16.50**	**XTM16-16.50**
–	0.6535	16.60	**XTP16-16.60**	**XTK16-16.60**	**XTN16-16.60**	**XTM16-16.60**
21/32	0.6563	16.67	**XTP16-16.67**	**XTK16-16.67**	**XTN16-16.67**	**XTM16-16.67**
–	0.6614	16.80	**XTP16-16.80**	**XTK16-16.80**	**XTN16-16.80**	**XTM16-16.80**
–	0.6654	16.90	**XTP16-16.90**	**XTK16-16.90**	**XTN16-16.90**	**XTM16-16.90**

Inserts sold in multiples of 1.

A20: 68 - 83
Key on A20: 1
A20: 6 - 9

Sizes not shown are available upon request. When ordering, please follow the example below:	
Imperial:	0.5180", Steel, 13 series = use Part No. **XTP13-13.16**
Metric:	13.16 mm, Steel, 13 series = use Part No. **XTP13-13.16**

GEN3SYS XT Pro Drill Insert Holders

16 Series | Diameter Range: 0.6299" - 0.6692" (16.00 mm - 16.99 mm)

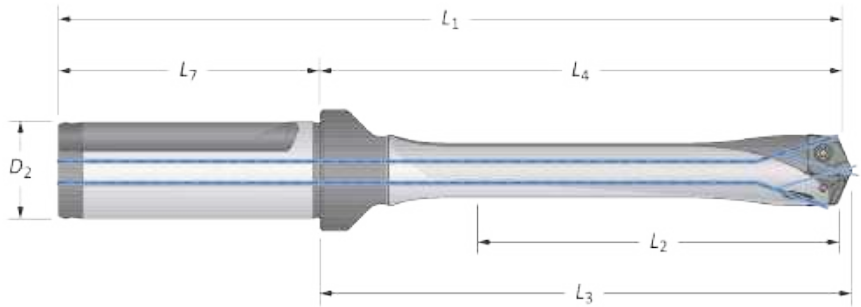

	Flute	Length	Body L_2	Body L_4	Body L_3	Body L_1	Shank L_7	Shank D_2	Shank Flat	Part No.
i	Straight	3xD	2	3-13/64	3-5/16	5-15/64	2-1/32	3/4	YES	HXT0316S-075F
		3xD	2	3-13/64	3-5/16	5-15/64	2-1/32	3/4	NO	HXT0316S-075C
		5xD	3-11/32	4-17/32	4-21/32	6-9/16	2-1/32	3/4	YES	HXT0516S-075F
		5xD	3-11/32	4-17/32	4-21/32	6-9/16	2-1/32	3/4	NO	HXT0516S-075C
		7xD	4-11/16	5-7/8	5-63/64	7-29/32	2-1/32	3/4	YES	HXT0716S-075F
		7xD	4-11/16	5-7/8	5-63/64	7-29/32	2-1/32	3/4	NO	HXT0716S-075C
		10xD	6-11/16	7-7/8	8	9-29/32	2-1/32	3/4	YES	⚠ HXT1016S-075F
		10xD	6-11/16	7-7/8	8	9-29/32	2-1/32	3/4	NO	⚠ HXT1016S-075C
		12xD	8-1/32	9-7/32	9-21/64	11-1/4	2-1/32	3/4	YES	⚠ HXT1216S-075F
		12xD	8-1/32	9-7/32	9-21/64	11-1/4	2-1/32	3/4	NO	⚠ HXT1216S-075C
m	Straight	3xD	50.8	81.3	84.2	131.3	50.0	20.0	YES	HXT0316S-20FM
		3xD	50.8	81.3	84.2	131.3	50.0	20.0	NO	HXT0316S-20CM
		5xD	85.0	115.1	118.2	165.1	50.0	20.0	YES	HXT0516S-20FM
		5xD	85.0	115.1	118.2	165.1	50.0	20.0	NO	HXT0516S-20CM
		7xD	119.0	149.2	152.0	199.2	50.0	20.0	YES	HXT0716S-20FM
		7xD	119.0	149.2	152.0	199.2	50.0	20.0	NO	HXT0716S-20CM
		10xD	169.9	200.0	203.2	250.0	50.0	20.0	YES	⚠ HXT1016S-20FM
		10xD	169.9	200.0	203.2	250.0	50.0	20.0	NO	⚠ HXT1016S-20CM
		12xD	204.0	234.3	237.2	284.3	50.0	20.0	YES	⚠ HXT1216S-20FM
		12xD	204.0	234.3	237.2	284.3	50.0	20.0	NO	⚠ HXT1216S-20CM

Connection Accessories

Insert Screws	Nylon Locking Screws	Insert Driver	Preset Torque Hand Driver	Replacement Tips	Admissible Tightening Torque*
72556-IP8-1	72556N-IP8-1	8IP-8	8IP-8TL	8IP-8B	15.5 in-lbs (175 N-cm)

*Tightening torques are calculated with a friction coefficient of μ = 0.14 and develop 90% of ultimate yield strength.

⚠ WARNING Refer to Speed and Feed charts for recommended adjustments to speeds and feeds. Refer to page A20: 86 for deep hole drilling guidelines in this section of the catalog. Visit **www.alliedmachine.com/DeepHoleGuidelines** for the most up-to-date information and procedures. Factory technical assistance is available for your specific applications through our Application Engineering Team.
ext: **7611** | *email:* **appeng@alliedmachine.com**

i = Imperial (in)
m = Metric (mm)
Screws sold in multiples of 10

GEN3SYS XT Drill Inserts

16 Series | Diameter Range: 0.6299" - 0.6692" (16.00 mm - 16.99 mm)

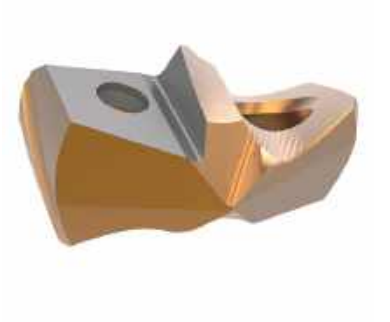

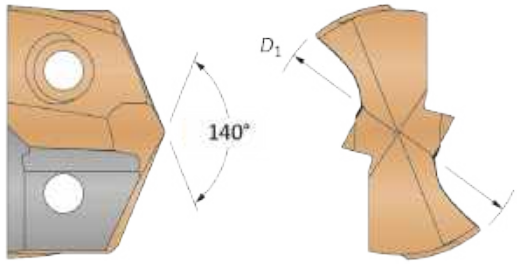

Insert							
Carbide Substrate	**Fractional Equivalent**	**D_1 inch**	**D_1 mm**	**Standard Part No.**	**Low Rake Part No.**	**Cast Iron Part No.**	**Stainless Part No.**
C1 (K35)	–	0.6299	16.00	**7C116P-16**	**7C116P-16LR**	–	–
	–	0.6331	16.08	**7C116P-16.08**	**7C116P-16.08LR**	–	–
	41/64	0.6406	16.27	**7C116P-.640**	**7C116P-.640LR**	–	–
	–	0.6496	16.50	**7C116P-16.5**	**7C116P-16.5LR**	–	–
	21/32	0.6563	16.67	**7C116P-0021**	**7C116P-0021LR**	–	–
C2 (K20)	–	0.6299	16.00	**7C216P-16**	**7C216P-16LR**	**7C216P-16CI**	**7C216P-16AS**
	–	0.6331	16.08	**7C216P-16.08**	**7C216P-16.08LR**	**7C216P-16.08CI**	**7C216P-16.08AS**
	41/64	0.6406	16.27	**7C216P-.640**	**7C216P-.640LR**	**7C216P-.640CI**	**7C216P-.640AS**
	–	0.6496	16.50	**7C216P-16.5**	**7C216P-16.5LR**	**7C216P-16.5CI**	**7C216P-16.5AS**
	21/32	0.6563	16.67	**7C216P-0021**	**7C216P-0021LR**	**7C216P-0021CI**	**7C216P-0021AS**

Inserts sold in multiples of 1.

A20: 68 - 83
Key on A20: 1

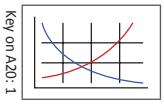

A20: 6 - 9

Sizes not shown are available upon request. When ordering, please follow the example below:	
Imperial:	0.5200", 13 series, C2 = use Part No. **7C213P-.5200**
Metric:	13.20 mm, 13 series, C2 = use Part No. **7C213P-13.20**

GEN3SYS Drill Insert Holders

16 Series | Diameter Range: 0.6299" - 0.6692" (16.00 mm - 16.99 mm)

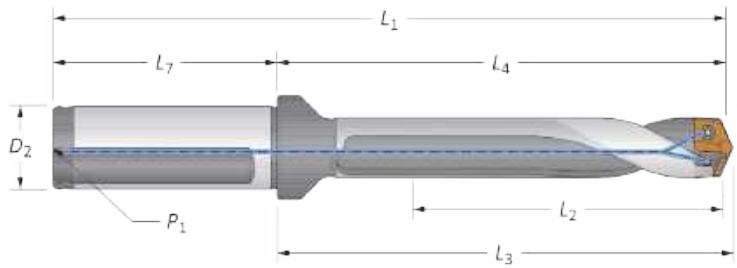

Straight and Helical

	Flute	Body Length	L_2	L_4	L_3	L_1	Shank L_7	D_2	P_1	Flat	Part No.
i	Straight	3xD	2	3-13/64	3-5/16	5-15/64	2-1/32	3/4	1/8	YES	**60316S-075F**
		5xD	3-11/32	4-17/32	4-21/32	6-9/16	2-1/32	3/4	1/8	YES	**60516S-075F**
		7xD	4-11/16	5-7/8	5-63/64	7-29/32	2-1/32	3/4	1/8	YES	**60716S-075F**
	Helical	Stub	13/16	2	2-7/64	4-1/32	2-1/32	3/4	1/8	YES	**60116H-075F**
		3xD	2	3-13/64	3-5/16	5-15/64	2-1/32	3/4	1/8	YES	**60316H-075F**
		3xD	2	3-13/64	3-5/16	5-15/64	2-1/32	3/4	1/8	NO	**60316H-075C**
		5xD	3-11/32	4-17/32	4-21/32	6-9/16	2-1/32	3/4	1/8	YES	**60516H-075F**
		5xD	3-11/32	4-17/32	4-21/32	6-9/16	2-1/32	3/4	1/8	NO	**60516H-075C**
		7xD	4-11/16	5-7/8	5-63/64	7-29/32	2-1/32	3/4	1/8	YES	**60716H-075F**
		7xD	4-11/16	5-7/8	5-63/64	7-29/32	2-1/32	3/4	1/8	NO	**60716H-075C**
m	Straight	3xD	50.8	81.3	84.2	131.3	50.0	20.0	1/8*	YES	**60316S-20FM**
		5xD	85.0	115.1	118.2	165.1	50.0	20.0	1/8*	YES	**60516S-20FM**
		7xD	119.0	149.2	152.0	199.2	50.0	20.0	1/8*	YES	**60716S-20FM**
	Helical	Stub	21.0	50.8	53.7	100.8	50.0	20.0	1/8*	YES	**60116H-20FM**
		3xD	50.8	81.3	84.2	131.3	50.0	20.0	1/8*	YES	**60316H-20FM**
		3xD	50.8	81.3	84.2	131.3	50.0	20.0	1/8*	NO	**60316H-20CM**
		5xD	85.0	115.1	118.2	165.1	50.0	20.0	1/8*	YES	**60516H-20FM**
		5xD	85.0	115.1	118.2	165.1	50.0	20.0	1/8*	NO	**60516H-20CM**
		7xD	119.0	149.2	152.0	199.2	50.0	20.0	1/8*	YES	**60716H-20FM**
		7xD	119.0	149.2	152.0	199.2	50.0	20.0	1/8*	NO	**60716H-20CM**

*Thread to BSP and ISO 7-1

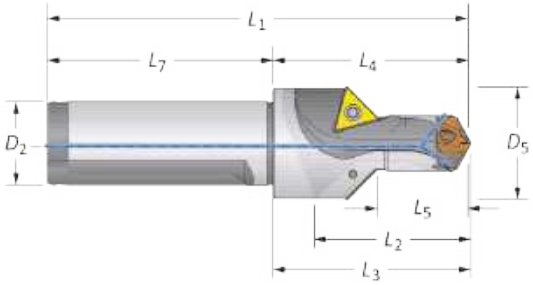

Drill / Chamfer

	Step D_5	Step L_5	Body L_2	L_4	L_3	L_1	Shank L_7	D_2	Part No.	Chamfer Insert
i	1-1/16	61/64	1-19/64	2	2-7/64	4-1/32	2-1/32	3/4	**60116C45-075F**	**TCMT-110204**
m	27.0	24.0	33.1	50.8	53.7	100.8	50.0	20.0	**60116C45-20FM**	**TCMT-110204**

Connection Accessories

Insert Screws	Nylon Locking Screws	Insert Driver	Preset Torque Hand Driver	Replacement Tips	Admissible Tightening Torque*
72556-IP8-1	**72556N-IP8-1**	**8IP-8**	**8IP-8TL**	**8IP-8B**	15.5 in-lbs (175 N-cm)

*Tightening torques are calculated with a friction coefficient of μ = 0.14 and develop 90% of ultimate yield strength.

i = Imperial (in)
m = Metric (mm)

Chamfer inserts sold separately in multiples of 10 | Screws sold in multiples of 10

GEN3SYS XT Pro Drill Inserts

17 Series | Diameter Range: 0.6693" - 0.7086" (17.00 mm - 17.99 mm)

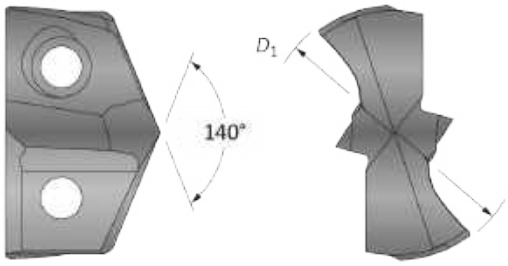

Insert						
Fractional Equivalent	D_1 inch	D_1 mm	Part No.	Part No.	Part No.	Part No.
			P	K	N	M
–	0.6693	17.00	**XTP17-17.00**	**XTK17-17.00**	**XTN17-17.00**	**XTM17-17.00**
43/64	0.6720	17.07	**XTP17-17.07**	**XTK17-17.07**	**XTN17-17.07**	**XTM17-17.07**
–	0.6732	17.10	**XTP17-17.10**	**XTK17-17.10**	**XTN17-17.10**	**XTM17-17.10**
–	0.6772	17.20	**XTP17-17.20**	**XTK17-17.20**	**XTN17-17.20**	**XTM17-17.20**
–	0.6811	17.30	**XTP17-17.30**	**XTK17-17.30**	**XTN17-17.30**	**XTM17-17.30**
–	0.6850	17.40	**XTP17-17.40**	**XTK17-17.40**	**XTN17-17.40**	**XTM17-17.40**
11/16	0.6874	17.46	**XTP17-17.46**	**XTK17-17.46**	**XTN17-17.46**	**XTM17-17.46**
–	0.6890	17.50	**XTP17-17.50**	**XTK17-17.50**	**XTN17-17.50**	**XTM17-17.50**
–	0.6929	17.60	**XTP17-17.60**	**XTK17-17.60**	**XTN17-17.60**	**XTM17-17.60**
–	0.6969	17.70	**XTP17-17.70**	**XTK17-17.70**	**XTN17-17.70**	**XTM17-17.70**
–	0.7008	17.80	**XTP17-17.80**	**XTK17-17.80**	**XTN17-17.80**	**XTM17-17.80**
45/64	0.7031	17.86	**XTP17-17.86**	**XTK17-17.86**	**XTN17-17.86**	**XTM17-17.86**
–	0.7047	17.90	**XTP17-17.90**	**XTK17-17.90**	**XTN17-17.90**	**XTM17-17.90**

Inserts sold in multiples of 1.

A20: 68 - 83
Key on A20: 1

A20: 6 - 9

Sizes not shown are available upon request. When ordering, please follow the example below:	
Imperial:	0.5180", Steel, 13 series = use Part No. **XTP13-13.16**
Metric:	13.16 mm, Steel, 13 series = use Part No. **XTP13-13.16**

GEN3SYS XT Pro Drill Insert Holders

17 Series | Diameter Range: 0.6693" - 0.7086" (17.00 mm - 17.99 mm)

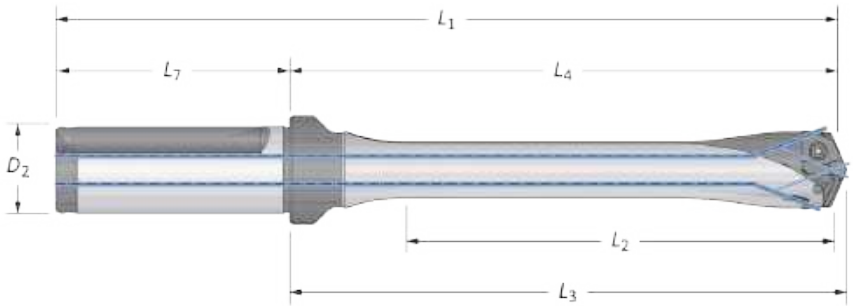

	Flute	Body Length	L_2	L_4	L_3	L_1	Shank L_7	D_2	Flat	Part No.
i	Straight	3xD	2-1/8	3-19/64	3-27/64	5-21/64	2-1/32	3/4	YES	HXT0317S-075F
		3xD	2-1/8	3-19/64	3-27/64	5-21/64	2-1/32	3/4	NO	HXT0317S-075C
		5xD	3-35/64	4-23/32	4-27/32	6-3/4	2-1/32	3/4	YES	HXT0517S-075F
		5xD	3-35/64	4-23/32	4-27/32	6-3/4	2-1/32	3/4	NO	HXT0517S-075C
		7xD	4-61/64	6-9/64	6-1/4	8-11/64	2-1/32	3/4	YES	HXT0717S-075F
		7xD	4-61/64	6-9/64	6-1/4	8-11/64	2-1/32	3/4	NO	HXT0717S-075C
		10xD	7-5/64	8-17/64	8-3/8	10-19/64	2-1/32	3/4	YES	⚠ HXT1017S-075F
		10xD	7-5/64	8-17/64	8-3/8	10-19/64	2-1/32	3/4	NO	⚠ HXT1017S-075C
		12xD	8-1/2	9-11/16	9-13/16	11-23/32	2-1/32	3/4	YES	⚠ HXT1217S-075F
		12xD	8-1/2	9-11/16	9-13/16	11-23/32	2-1/32	3/4	NO	⚠ HXT1217S-075C
m	Straight	3xD	54.0	83.8	86.9	133.8	50.0	20.0	YES	HXT0317S-20FM
		3xD	54.0	83.8	86.9	133.8	50.0	20.0	NO	HXT0317S-20CM
		5xD	90.0	119.8	122.9	169.8	50.0	20.0	YES	HXT0517S-20FM
		5xD	90.0	119.8	122.9	169.8	50.0	20.0	NO	HXT0517S-20CM
		7xD	125.8	156.0	158.9	206.0	50.0	20.0	YES	HXT0717S-20FM
		7xD	125.8	156.0	158.9	206.0	50.0	20.0	NO	HXT0717S-20CM
		10xD	179.8	209.9	212.8	259.9	50.0	20.0	YES	⚠ HXT1017S-20FM
		10xD	179.8	209.9	212.8	259.9	50.0	20.0	NO	⚠ HXT1017S-20CM
		12xD	216.0	246.0	248.9	296.0	50.0	20.0	YES	⚠ HXT1217S-20FM
		12xD	216.0	246.0	248.9	296.0	50.0	20.0	NO	⚠ HXT1217S-20CM

Connection Accessories

Insert Screws	Nylon Locking Screws	Insert Driver	Preset Torque Hand Driver	Replacement Tips	Admissible Tightening Torque*
72567-IP8-1	72567N-IP8-1	8IP-8	8IP-8TL	8IP-8B	15.5 in-lbs (175 N-cm)

*Tightening torques are calculated with a friction coefficient of μ = 0.14 and develop 90% of ultimate yield strength.

⚠ WARNING Refer to Speed and Feed charts for recommended adjustments to speeds and feeds. Refer to page A20: 86 for deep hole drilling guidelines in this section of the catalog. Visit **www.alliedmachine.com/DeepHoleGuidelines** for the most up-to-date information and procedures. Factory technical assistance is available for your specific applications through our Application Engineering Team.
ext: **7611** | *email:* **appeng@alliedmachine.com**

i = Imperial (in)
m = Metric (mm)
Screws sold in multiples of 10

GEN3SYS XT Drill Inserts

17 Series | Diameter Range: 0.6693" - 0.7086" (17.00 mm - 17.99 mm)

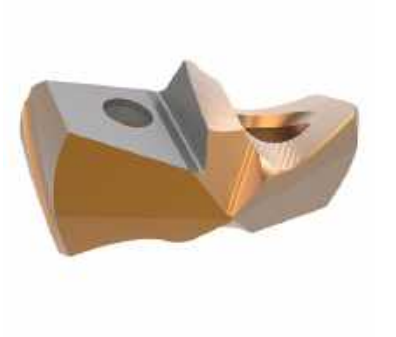

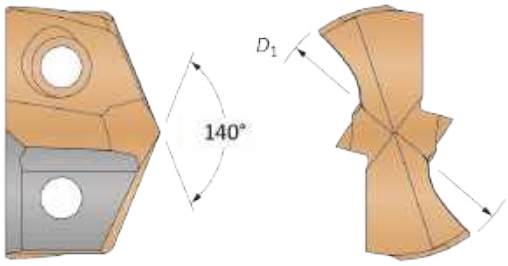

Insert							
Carbide Substrate	**Fractional Equivalent**	**D_1 inch**	**D_1 mm**	**Standard Part No.**	**Low Rake Part No.**	**Cast Iron Part No.**	**Stainless Part No.**
C1 (K35)		0.6693	17.00	**7C117P-17**	**7C117P-17LR**	–	–
	43/64	0.6719	17.07	**7C117P-.671**	**7C117P-.671LR**	–	–
		0.6732	17.10	**7C117P-17.1**	**7C117P-17.1LR**	–	–
		0.6772	17.20	**7C117P-17.2**	**7C117P-17.2LR**	–	–
	11/16	0.6875	17.46	**7C117P-0022**	**7C117P-0022LR**	–	–
		0.6890	17.50	**7C117P-17.5**	**7C117P-17.5LR**	–	–
	45/64	0.7031	17.86	**7C117P-.703**	**7C117P-.703LR**	–	–
C2 (K20)		0.6693	17.00	**7C217P-17**	**7C217P-17LR**	**7C217P-17CI**	**7C217P-17AS**
	43/64	0.6719	17.07	**7C217P-.671**	**7C217P-.671LR**	**7C217P-.671CI**	**7C217P-.671AS**
		0.6732	17.10	**7C217P-17.1**	**7C217P-17.1LR**	**7C217P-17.1CI**	**7C217P-17.1AS**
		0.6772	17.20	**7C217P-17.2**	**7C217P-17.2LR**	**7C217P-17.2CI**	**7C217P-17.2AS**
	11/16	0.6875	17.46	**7C217P-0022**	**7C217P-0022LR**	**7C217P-0022CI**	**7C217P-0022AS**
		0.6890	17.50	**7C217P-17.5**	**7C217P-17.5LR**	**7C217P-17.5CI**	**7C217P-17.5AS**
	45/64	0.7031	17.86	**7C217P-.703**	**7C217P-.703LR**	**7C217P-.703CI**	**7C217P-.703AS**

Inserts sold in multiples of 1.

A20: 68 - 83
Key on A20: 1

A20: 6 - 9

Sizes not shown are available upon request. When ordering, please follow the example below:	
Imperial:	0.5200", 13 series, C2 = use Part No. **7C213P-.5200**
Metric:	13.20 mm, 13 series, C2 = use Part No. **7C213P-13.20**

GEN3SYS Drill Insert Holders

17 Series | Diameter Range: 0.6693" - 0.7086" (17.00 mm - 17.99 mm)

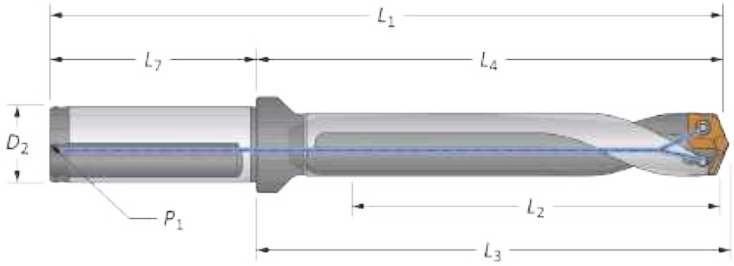

Straight and Helical

	Flute	Body Length	L_2	L_4	L_3	L_1	Shank L_7	D_2	P_1	Flat	Part No.
i	Straight	3xD	2-1/8	3-19/64	3-27/64	5-21/64	2-1/32	3/4	1/8	YES	**60317S-075F**
		5xD	3-35/64	4-23/32	4-27/32	6-3/4	2-1/32	3/4	1/8	YES	**60517S-075F**
		7xD	4-61/64	6-9/64	6-1/4	8-11/64	2-1/32	3/4	1/8	YES	**60717S-075F**
	Helical	Stub	13/16	1-63/64	2-7/64	4-1/64	2-1/32	3/4	1/8	YES	**60117H-075F**
		3xD	2-1/8	3-19/64	3-27/64	5-21/64	2-1/32	3/4	1/8	YES	**60317H-075F**
		3xD	2-1/8	3-19/64	3-27/64	5-21/64	2-1/32	3/4	1/8	NO	**60317H-075C**
		5xD	3-35/64	4-23/32	4-27/32	6-3/4	2-1/32	3/4	1/8	YES	**60517H-075F**
		5xD	3-35/64	4-23/32	4-27/32	6-3/4	2-1/32	3/4	1/8	NO	**60517H-075C**
		7xD	4-61/64	6-9/64	6-1/4	8-11/64	2-1/32	3/4	1/8	YES	**60717H-075F**
		7xD	4-61/64	6-9/64	6-1/4	8-11/64	2-1/32	3/4	1/8	NO	**60717H-075C**
m	Straight	3xD	54.0	83.8	86.9	133.8	50.0	20.0	1/8*	YES	**60317S-20FM**
		5xD	90.0	119.8	122.9	169.8	50.0	20.0	1/8*	YES	**60517S-20FM**
		7xD	125.8	156.0	158.9	206.0	50.0	20.0	1/8*	YES	**60717S-20FM**
	Helical	Stub	20.6	50.5	53.5	100.5	50.0	20.0	1/8*	YES	**60117H-20FM**
		3xD	54.0	83.8	86.9	133.8	50.0	20.0	1/8*	YES	**60317H-20FM**
		3xD	54.0	83.8	86.9	133.8	50.0	20.0	1/8*	NO	**60317H-20CM**
		5xD	90.0	119.8	122.9	169.8	50.0	20.0	1/8*	YES	**60517H-20FM**
		5xD	90.0	119.8	122.9	169.8	50.0	20.0	1/8*	NO	**60517H-20CM**
		7xD	125.8	156.0	158.9	206.0	50.0	20.0	1/8*	YES	**60717H-20FM**
		7xD	125.8	156.0	158.9	206.0	50.0	20.0	1/8*	NO	**60717H-20CM**

*Thread to BSP and ISO 7-1

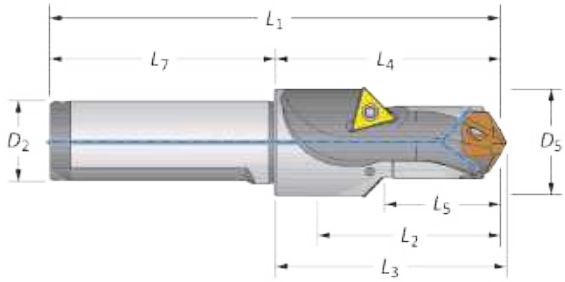

Drill / Chamfer

	Step D_5	Step L_5	Body L_2	L_4	L_3	L_1	Shank L_7	D_2	Part No.	Chamfer Insert
i	1	1	1-5/16	1-63/64	2-7/64	4-1/64	2-1/32	3/4	**60117C45-075F**	**TCMT-110204**
m	25.4	25.5	33.3	50.5	53.4	100.5	50.0	20.0	**60117C45-20FM**	**TCMT-110204**

Connection Accessories

Insert Screws	Nylon Locking Screws	Insert Driver	Preset Torque Hand Driver	Replacement Tips	Admissible Tightening Torque*
72567-IP8-1	**72567N-IP8-1**	**8IP-8**	**8IP-8TL**	**8IP-8B**	15.5 in-lbs (175 N-cm)

*Tightening torques are calculated with a friction coefficient of μ = 0.14 and develop 90% of ultimate yield strength.

i = Imperial (in)
m = Metric (mm)

Chamfer inserts sold separately in multiples of 10 | Screws sold in multiples of 10

GEN3SYS XT Pro Drill Inserts

18 Series | Diameter Range: 0.7087" - 0.7873" (18.00 mm - 19.99 mm)

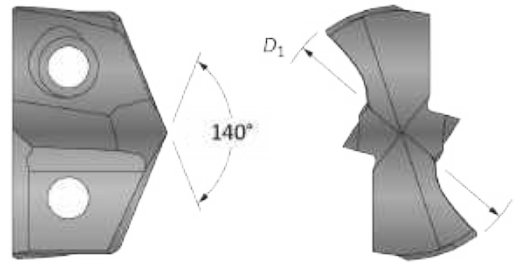

Insert						
Fractional Equivalent	D_1 inch	D_1 mm	Part No. P	Part No. K	Part No. N	Part No. M
–	0.7087	18.00	XTP18-18.00	XTK18-18.00	XTN18-18.00	XTM18-18.00
–	0.7126	18.10	XTP18-18.10	XTK18-18.10	XTN18-18.10	XTM18-18.10
–	0.7165	18.20	XTP18-18.20	XTK18-18.20	XTN18-18.20	XTM18-18.20
23/32	0.7189	18.26	XTP18-18.26	XTK18-18.26	XTN18-18.26	XTM18-18.26
–	0.7205	18.30	XTP18-18.30	XTK18-18.30	XTN18-18.30	XTM18-18.30
–	0.7244	18.40	XTP18-18.40	XTK18-18.40	XTN18-18.40	XTM18-18.40
–	0.7283	18.50	XTP18-18.50	XTK18-18.50	XTN18-18.50	XTM18-18.50
–	0.7323	18.60	XTP18-18.60	XTK18-18.60	XTN18-18.60	XTM18-18.60
47/64	0.7343	18.65	XTP18-18.65	XTK18-18.65	XTN18-18.65	XTM18-18.65
–	0.7362	18.70	XTP18-18.70	XTK18-18.70	XTN18-18.70	XTM18-18.70
–	0.7402	18.80	XTP18-18.80	XTK18-18.80	XTN18-18.80	XTM18-18.80
–	0.7441	18.90	XTP18-18.90	XTK18-18.90	XTN18-18.90	XTM18-18.90
–	0.7480	19.00	XTP18-19.00	XTK18-19.00	XTN18-19.00	XTM18-19.00
3/4	0.7500	19.05	XTP18-19.05	XTK18-19.05	XTN18-19.05	XTM18-19.05
–	0.7520	19.10	XTP18-19.10	XTK18-19.10	XTN18-19.10	XTM18-19.10
–	0.7559	19.20	XTP18-19.20	XTK18-19.20	XTN18-19.20	XTM18-19.20
–	0.7579	19.25	XTP18-19.25	XTK18-19.25	XTN18-19.25	XTM18-19.25
–	0.7598	19.30	XTP18-19.30	XTK18-19.30	XTN18-19.30	XTM18-19.30
–	0.7638	19.40	XTP18-19.40	XTK18-19.40	XTN18-19.40	XTM18-19.40
49/64	0.7657	19.45	XTP18-19.45	XTK18-19.45	XTN18-19.45	XTM18-19.45
–	0.7677	19.50	XTP18-19.50	XTK18-19.50	XTN18-19.50	XTM18-19.50
–	0.7717	19.60	XTP18-19.60	XTK18-19.60	XTN18-19.60	XTM18-19.60
–	0.7756	19.70	XTP18-19.70	XTK18-19.70	XTN18-19.70	XTM18-19.70
–	0.7795	19.80	XTP18-19.80	XTK18-19.80	XTN18-19.80	XTM18-19.80
25/32	0.7811	19.84	XTP18-19.84	XTK18-19.84	XTN18-19.84	XTM18-19.84
–	0.7835	19.90	XTP18-19.90	XTK18-19.90	XTN18-19.90	XTM18-19.90

Inserts sold in multiples of 1.

A20: 68 - 83
Key on A20: 1

A20: 6 - 9

Sizes not shown are available upon request. When ordering, please follow the example below:	
Imperial:	0.5180", Steel, 13 series = use Part No. **XTP13-13.16**
Metric:	13.16 mm, Steel, 13 series = use Part No. **XTP13-13.16**

GEN3SYS XT Pro Drill Insert Holders

18 Series | Diameter Range: 0.7087" - 0.7873" (18.00 mm - 19.99 mm)

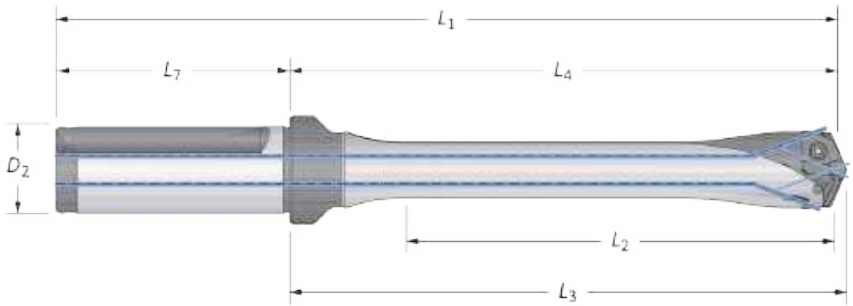

	Flute	Body Length	L_2	L_4	L_3	L_1	Shank L_7	D_2	Flat	Part No.
i	Straight	3xD	2-23/64	3-45/64	3-13/16	5-63/64	2-9/32	1	YES	**HXT0318S-100F**
		3xD	2-23/64	3-45/64	3-13/16	5-63/64	2-9/32	1	NO	**HXT0318S-100C**
		5xD	3-15/16	5-17/64	5-25/64	7-35/64	2-9/32	1	YES	**HXT0518S-100F**
		5xD	3-15/16	5-17/64	5-25/64	7-35/64	2-9/32	1	NO	**HXT0518S-100C**
		7xD	5-33/64	6-27/32	6-61/64	9-1/8	2-9/32	1	YES	**HXT0718S-100F**
		7xD	5-33/64	6-27/32	6-61/64	9-1/8	2-9/32	1	NO	**HXT0718S-100C**
		10xD	7-7/8	9-7/32	9-5/16	11-31/64	2-9/32	1	YES	⚠ **HXT1018S-100F**
		10xD	7-7/8	9-7/32	9-5/16	11-31/64	2-9/32	1	NO	⚠ **HXT1018S-100C**
		12xD	9-7/16	10-25/32	10-57/64	13-1/16	2-9/32	1	YES	⚠ **HXT1218S-100F**
		12xD	9-7/16	10-25-32	10-57/64	13-1/16	2-9/32	1	NO	⚠ **HXT1218S-100C**
m	Straight	3xD	60.0	94.0	96.8	150.0	56.0	25.0	YES	**HXT0318S-25FM**
		3xD	60.0	94.0	96.8	150.0	56.0	25.0	NO	**HXT0318S-25CM**
		5xD	100.0	133.7	136.8	189.7	56.0	25.0	YES	**HXT0518S-25FM**
		5xD	100.0	133.7	136.8	189.7	56.0	25.0	NO	**HXT0518S-25CM**
		7xD	140.0	173.4	176.8	229.4	56.0	25.0	YES	**HXT0718S-25FM**
		7xD	140.0	173.4	176.8	229.4	56.0	25.0	NO	**HXT0718S-25CM**
		10xD	199.9	234.1	236.7	290.1	56.0	25.0	YES	⚠ **HXT1018S-25FM**
		10xD	199.9	234.1	236.7	290.1	56.0	25.0	NO	⚠ **HXT1018S-25CM**
		12xD	240.0	273.9	276.7	329.9	56.0	25.0	YES	⚠ **HXT1218S-25FM**
		12xD	240.0	273.9	276.7	329.9	56.0	25.0	NO	⚠ **HXT1218S-25CM**

Connection Accessories

Insert Screws	Nylon Locking Screws	Insert Driver	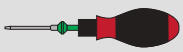 Preset Torque Hand Driver	Replacement Tips	Admissible Tightening Torque*
7375-IP9-1	**7375N-IP9-1**	**8IP-9**	**8IP-9TL**	**8IP-9B**	27.0 in-lbs (305 N-cm)

*Tightening torques are calculated with a friction coefficient of μ = 0.14 and develop 90% of ultimate yield strength.

⚠ WARNING Refer to Speed and Feed charts for recommended adjustments to speeds and feeds. Refer to page A20: 86 for deep hole drilling guidelines in this section of the catalog. Visit **www.alliedmachine.com/DeepHoleGuidelines** for the most up-to-date information and procedures. Factory technical assistance is available for your specific applications through our Application Engineering Team.
ext: **7611** | *email:* **appeng@alliedmachine.com**

i = Imperial (in)
m = Metric (mm)
Screws sold in multiples of 10

GEN3SYS XT Drill Inserts

18 Series | Diameter Range: 0.7087" - 0.7873" (18.00 mm - 19.99 mm)

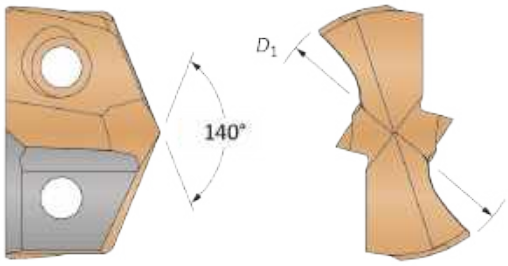

Insert							
Carbide Substrate	Fractional Equivalent	D_1 inch	D_1 mm	Standard Part No.	Low Rake Part No.	Cast Iron Part No.	Stainless Part No.
C1 (K35)	–	0.7087	18.00	**7C118P-18**	**7C118P-18LR**	–	–
	23/32	0.7188	18.26	**7C118P-0023**	**7C118P-0023LR**	–	–
	–	0.7283	18.50	**7C118P-18.5**	**7C118P-18.5LR**	–	–
	47/64	0.7344	18.65	**7C118P-.734**	**7C118P-.734LR**	–	–
	–	0.7480	19.00	**7C118P-19**	**7C118P-19LR**	–	–
	3/4	0.7500	19.05	**7C118P-0024**	**7C118P-0024LR**	–	–
	–	0.7580	19.25	**7C118P-.758**	**7C118P-.758LR**	–	–
	49/64	0.7656	19.45	**7C118P-.765**	**7C118P-.765LR**	–	–
	–	0.7677	19.50	**7C118P-19.5**	**7C118P-19.5LR**	–	–
	–	0.7795	19.80	**7C118P-19.8**	**7C118P-19.8LR**	–	–
	25/32	0.7813	19.85	**7C118P-0025**	**7C118P-0025LR**	–	–
C2 (K20)	–	0.7087	18.00	**7C218P-18**	**7C218P-18LR**	**7C218P-18CI**	**7C218P-18AS**
	23/32	0.7188	18.26	**7C218P-0023**	**7C218P-0023LR**	**7C218P-0023CI**	**7C218P-0023AS**
	–	0.7283	18.50	**7C218P-18.5**	**7C218P-18.5LR**	**7C218P-18.5CI**	**7C218P-18.5AS**
	47/64	0.7344	18.65	**7C218P-.734**	**7C218P-.734LR**	**7C218P-.734CI**	**7C218P-.734AS**
	–	0.7480	19.00	**7C218P-19**	**7C218P-19LR**	**7C218P-19CI**	**7C218P-19AS**
	3/4	0.7500	19.05	**7C218P-0024**	**7C218P-0024LR**	**7C218P-0024CI**	**7C218P-0024AS**
	–	0.7580	19.25	**7C218P-.758**	**7C218P-.758LR**	**7C218P-.758CI**	**7C218P-.758AS**
	49/64	0.7656	19.45	**7C218P-.765**	**7C218P-.765LR**	**7C218P-.765CI**	**7C218P-.765AS**
	–	0.7677	19.50	**7C218P-19.5**	**7C218P-19.5LR**	**7C218P-19.5CI**	**7C218P-19.5AS**
	–	0.7795	19.80	**7C218P-19.8**	**7C218P-19.8LR**	**7C218P-19.8CI**	**7C218P-19.8AS**
	25/32	0.7813	19.85	**7C218P-0025**	**7C218P-0025LR**	**7C218P-0025CI**	**7C218P-0025AS**

Inserts sold in multiples of 1.

A20: 68 - 83
Key on A20: 1

A20: 6 - 9

Sizes not shown are available upon request. When ordering, please follow the example below:	
Imperial:	0.5200", 13 series, C2 = use Part No. **7C213P-.5200**
Metric:	13.20 mm, 13 series, C2 = use Part No. **7C213P-13.20**

GEN3SYS Drill Insert Holders

18 Series | Diameter Range: 0.7087" - 0.7873" (18.00 mm - 19.99 mm)

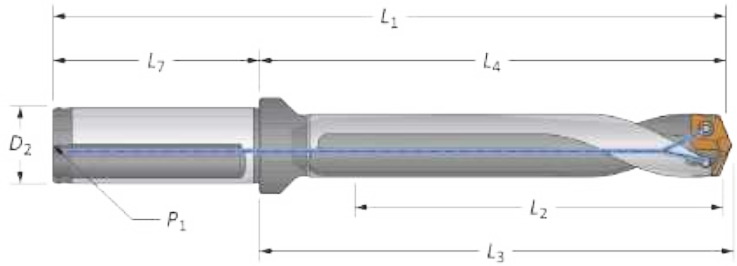

Straight and Helical

	Flute	Body Length	L_2	L_4	L_3	L_1	Shank L_7	D_2	P_1	Flat	Part No.
i	Straight	3xD	2-23/64	3-45/64	3-13/16	5-63/64	2-9/32	1	1/8	YES	**60318S-100F**
		5xD	3-15/16	5-17/64	5-25/64	7-35/64	2-9/32	1	1/8	YES	**60518S-100F**
		7xD	5-33/64	6-27/32	6-61/64	9-1/8	2-9/32	1	1/8	YES	**60718S-100F**
	Helical	Stub	7/8	2-13/64	2-5/16	4-31/64	2-9/32	1	1/8	YES	**60118H-100F**
		3xD	2-23/64	3-45/64	3-13/16	5-63/64	2-9/32	1	1/8	YES	**60318H-100F**
		3xD	2-23/64	3-45/64	3-13/16	5-63/64	2-9/32	1	1/8	NO	**60318H-100C**
		5xD	3-15/16	5-17/64	5-25/64	7-35/64	2-9/32	1	1/8	YES	**60518H-100F**
		5xD	3-15/16	5-17/64	5-25/64	7-35/64	2-9/32	1	1/8	NO	**60518H-100C**
		7xD	5-33/64	6-27/32	6-61/64	9-1/8	2-9/32	1	1/8	YES	**60718H-100F**
		7xD	5-33/64	6-27/32	6-61/64	9-1/8	2-9/32	1	1/8	NO	**60718H-100C**
m	Straight	3xD	60.0	94.0	96.8	150.0	56.0	25.0	1/8*	YES	**60318S-25FM**
		5xD	100.0	133.7	136.8	189.7	56.0	25.0	1/8*	YES	**60518S-25FM**
		7xD	140.0	173.4	176.8	229.4	56.0	25.0	1/8*	YES	**60718S-25FM**
	Helical	Stub	22.0	56.0	58.8	112.0	56.0	25.0	1/8*	YES	**60118H-25FM**
		3xD	60.0	94.0	96.8	150.0	56.0	25.0	1/8*	YES	**60318H-25FM**
		3xD	60.0	94.0	96.8	150.0	56.0	25.0	1/8*	NO	**60318H-25CM**
		5xD	100.0	133.7	136.8	189.7	56.0	25.0	1/8*	YES	**60518H-25FM**
		5xD	100.0	133.7	136.8	189.7	56.0	25.0	1/8*	NO	**60518H-25CM**
		7xD	140.0	173.4	176.8	229.4	56.0	25.0	1/8*	YES	**60718H-25FM**
		7xD	140.0	173.4	176.8	229.4	56.0	25.0	1/8*	NO	**60718H-25CM**

*Thread to BSP and ISO 7-1

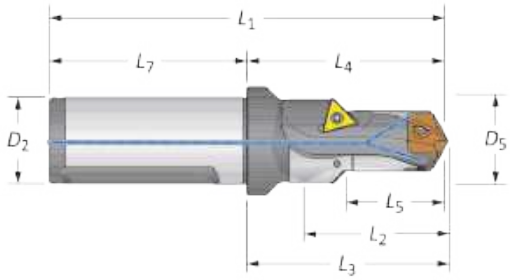

Drill / Chamfer

	Step D_5	L_5	Body L_2	L_4	L_3	L_1	Shank L_7	D_2	Part No.	Chamfer Insert
i	63/64	1-1/16	1-25/64	2-13/64	2-5/16	4-31/64	2-9/32	1	**60118C45-100F**	**TCMT-110204**
m	25.1	27	35.2	56.0	58.8	112.0	56.0	25.0	**60118C45-25FM**	**TCMT-110204**

Connection Accessories

Insert Screws	Nylon Locking Screws	Insert Driver	Preset Torque Hand Driver	Replacement Tips	Admissible Tightening Torque*
7375-IP9-1	**7375N-IP9-1**	**8IP-9**	**8IP-9TL**	**8IP-9B**	27.0 in-lbs (305 N-cm)

*Tightening torques are calculated with a friction coefficient of μ = 0.14 and develop 90% of ultimate yield strength.

i = Imperial (in)
m = Metric (mm)

Chamfer inserts sold separately in multiples of 10 | Screws sold in multiples of 10

GEN3SYS XT Pro Drill Inserts

20 Series | Diameter Range: 0.7874" - 0.8660" (20.00 mm - 21.99 mm)

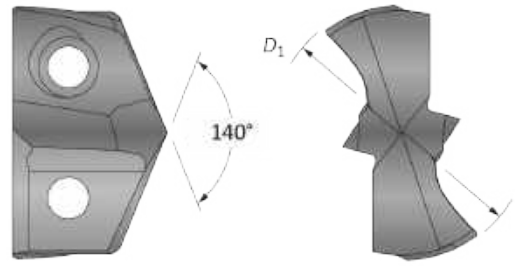

Insert						
Fractional Equivalent	D_1 inch	D_1 mm	Part No. P	Part No. K	Part No. N	Part No. M
–	0.7874	20.00	XTP20-20.00	XTK20-20.00	XTN20-20.00	XTM20-20.00
–	0.7913	20.10	XTP20-20.10	XTK20-20.10	XTN20-20.10	XTM20-20.10
–	0.7953	20.20	XTP20-20.20	XTK20-20.20	XTN20-20.20	XTM20-20.20
51/64	0.7969	20.24	XTP20-20.24	XTK20-20.24	XTN20-20.24	XTM20-20.24
–	0.7992	20.30	XTP20-20.30	XTK20-20.30	XTN20-20.30	XTM20-20.30
–	0.8031	20.40	XTP20-20.40	XTK20-20.40	XTN20-20.40	XTM20-20.40
–	0.8071	20.50	XTP20-20.50	XTK20-20.50	XTN20-20.50	XTM20-20.50
–	0.8110	20.60	XTP20-20.60	XTK20-20.60	XTN20-20.60	XTM20-20.60
13/16	0.8126	20.64	XTP20-20.64	XTK20-20.64	XTN20-20.64	XTM20-20.64
–	0.8150	20.70	XTP20-20.70	XTK20-20.70	XTN20-20.70	XTM20-20.70
–	0.8189	20.80	XTP20-20.80	XTK20-20.80	XTN20-20.80	XTM20-20.80
–	0.8228	20.90	XTP20-20.90	XTK20-20.90	XTN20-20.90	XTM20-20.90
–	0.8268	21.00	XTP20-21.00	XTK20-21.00	XTN20-21.00	XTM20-21.00
–	0.8307	21.10	XTP20-21.10	XTK20-21.10	XTN20-21.10	XTM20-21.10
–	0.8346	21.20	XTP20-21.20	XTK20-21.20	XTN20-21.20	XTM20-21.20
–	0.8386	21.30	XTP20-21.30	XTK20-21.30	XTN20-21.30	XTM20-21.30
–	0.8425	21.40	XTP20-21.40	XTK20-21.40	XTN20-21.40	XTM20-21.40
27/32	0.8437	21.43	XTP20-21.43	XTK20-21.43	XTN20-21.43	XTM20-21.43
–	0.8465	21.50	XTP20-21.50	XTK20-21.50	XTN20-21.50	XTM20-21.50
–	0.8504	21.60	XTP20-21.60	XTK20-21.60	XTN20-21.60	XTM20-21.60
–	0.8543	21.70	XTP20-21.70	XTK20-21.70	XTN20-21.70	XTM20-21.70
–	0.8583	21.80	XTP20-21.80	XTK20-21.80	XTN20-21.80	XTM20-21.80
55/64	0.8594	21.83	XTP20-21.83	XTK20-21.83	XTN20-21.83	XTM20-21.83
–	0.8622	21.90	XTP20-21.90	XTK20-21.90	XTN20-21.90	XTM20-21.90

Inserts sold in multiples of 1.

A20: 68 - 83
Key on A20: 1

A20: 6 - 9

Sizes not shown are available upon request. When ordering, please follow the example below:	
Imperial:	0.5180", Steel, 13 series = use Part No. **XTP13-13.16**
Metric:	13.16 mm, Steel, 13 series = use Part No. **XTP13-13.16**

GEN3SYS XT Pro Drill Insert Holders

20 Series | Diameter Range: 0.7874" - 0.8660" (20.00 mm - 21.99 mm)

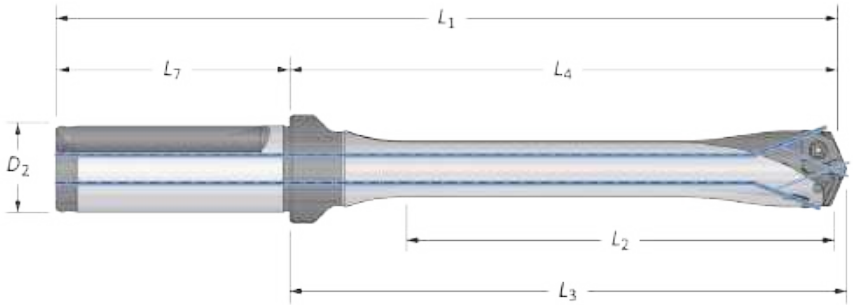

	Flute	Body Length	L_2	L_4	L_3	L_1	Shank L_7	D_2	Flat	Part No.
i	Straight	3xD	2-19/32	3-15/16	4-3/64	6-7/32	2-9/32	1	YES	**HXT0320S-100F**
		3xD	2-19/32	3-15/16	4-3/64	6-7/32	2-9/32	1	NO	**HXT0320S-100C**
		5xD	4-21/64	5-43/64	5-25/32	7-61/64	2-9/32	1	YES	**HXT0520S-100F**
		5xD	4-21/64	5-43/64	5-25/32	7-61/64	2-9/32	1	NO	**HXT0520S-100C**
		7xD	6-1/16	7-13/32	7-33/64	9-11/16	2-9/32	1	YES	**HXT0720S-100F**
		7xD	6-1/16	7-13/32	7-33/64	9-11/16	2-9/32	1	NO	**HXT0720S-100C**
		10xD	8-21/32	10	10-7/64	12-9/32	2-9/32	1	YES	⚠ **HXT1020S-100F**
		10xD	8-21/32	10	10-7/64	12-9/32	2-9/32	1	NO	⚠ **HXT1020S-100C**
		12xD	10-25/64	11-47/64	11-27/32	14-1/64	2-9/32	1	YES	⚠ **HXT1220S-100F**
		12xD	10-25/64	11-47/64	11-27/32	14-1/64	2-9/32	1	NO	⚠ **HXT1220S-100C**
m	Straight	3xD	66.0	100.0	102.9	156.0	56.0	25.0	YES	**HXT0320S-25FM**
		3xD	66.0	100.0	102.9	156.0	56.0	25.0	NO	**HXT0320S-25CM**
		5xD	110.0	144.0	146.9	200.0	56.0	25.0	YES	**HXT0520S-25FM**
		5xD	110.0	144.0	146.9	200.0	56.0	25.0	NO	**HXT0520S-25CM**
		7xD	153.9	187.0	190.9	243.0	56.0	25.0	YES	**HXT0720S-25FM**
		7xD	153.9	187.0	190.9	243.0	56.0	25.0	NO	**HXT0720S-25CM**
		10xD	219.9	254.0	256.8	310.0	56.0	25.0	YES	⚠ **HXT1020S-25FM**
		10xD	219.9	254.0	256.8	310.0	56.0	25.0	NO	⚠ **HXT1020S-25CM**
		12xD	264.0	298.0	300.8	354.0	56.0	25.0	YES	⚠ **HXT1220S-25FM**
		12xD	264.0	298.0	300.8	354.0	56.0	25.0	NO	⚠ **HXT1220S-25CM**

Connection Accessories

Insert Screws	Nylon Locking Screws	Insert Driver	Preset Torque Hand Driver	Replacement Tips	Admissible Tightening Torque*
7375-IP9-1	**7375N-IP9-1**	**8IP-9**	**8IP-9TL**	**8IP-9B**	27.0 in-lbs (305 N-cm)

*Tightening torques are calculated with a friction coefficient of μ = 0.14 and develop 90% of ultimate yield strength.

⚠ WARNING Refer to Speed and Feed charts for recommended adjustments to speeds and feeds. Refer to page A20: 86 for deep hole drilling guidelines in this section of the catalog. Visit **www.alliedmachine.com/DeepHoleGuidelines** for the most up-to-date information and procedures. Factory technical assistance is available for your specific applications through our Application Engineering Team.
ext: **7611** | *email:* **appeng@alliedmachine.com**

i = Imperial (in)
m = Metric (mm)
Screws sold in multiples of 10

GEN3SYS XT Drill Inserts

20 Series | Diameter Range: 0.7874" - 0.8660" (20.00 mm - 21.99 mm)

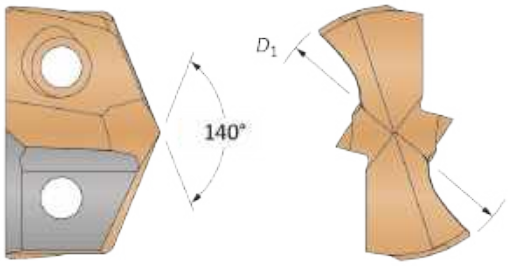

Insert							
Carbide Substrate	**Fractional Equivalent**	**D_1 inch**	**D_1 mm**	**Standard Part No.**	**Low Rake Part No.**	**Cast Iron Part No.**	**Stainless Part No.**
C1 (K35)	–	0.7874	20.00	**7C120P-20**	**7C120P-20LR**	–	–
	51/64	0.7969	20.24	**7C120P-.796**	**7C120P-.796LR**	–	–
	–	0.8071	20.50	**7C120P-20.5**	**7C120P-20.5LR**	–	–
	13/16	0.8125	20.64	**7C120P-0026**	**7C120P-0026LR**	–	–
	–	0.8268	21.00	**7C120P-21**	**7C120P-21LR**	–	–
	27/32	0.8438	21.43	**7C120P-0027**	**7C120P-0027LR**	–	–
	–	0.8465	21.50	**7C120P-21.5**	**7C120P-21.5LR**	–	–
	55/64	0.8594	21.83	**7C120P-.859**	**7C120P-.859LR**	–	–
C2 (K20)	–	0.7874	20.00	**7C220P-20**	**7C220P-20LR**	**7C220P-20CI**	**7C220P-20AS**
	51/64	0.7969	20.24	**7C220P-.796**	**7C220P-.796LR**	**7C220P-.796CI**	**7C220P-.796AS**
	–	0.8071	20.50	**7C220P-20.5**	**7C220P-20.5LR**	**7C220P-20.5CI**	**7C220P-20.5AS**
	13/16	0.8125	20.64	**7C220P-0026**	**7C220P-0026LR**	**7C220P-0026CI**	**7C220P-0026AS**
	–	0.8268	21.00	**7C220P-21**	**7C220P-21LR**	**7C220P-21CI**	**7C220P-21AS**
	27/32	0.8438	21.43	**7C220P-0027**	**7C220P-0027LR**	**7C220P-0027CI**	**7C220P-0027AS**
	–	0.8465	21.50	**7C220P-21.5**	**7C220P-21.5LR**	**7C220P-21.5CI**	**7C220P-21.5AS**
	55/64	0.8594	21.83	**7C220P-.859**	**7C220P-.859LR**	**7C220P-.859CI**	**7C220P-.859AS**

Inserts sold in multiples of 1.

A20: 68 - 83
Key on A20: 1

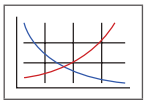

A20: 6 - 9

Sizes not shown are available upon request. When ordering, please follow the example below:	
Imperial:	0.5200", 13 series, C2 = use Part No. **7C213P-.5200**
Metric:	13.20 mm, 13 series, C2 = use Part No. **7C213P-13.20**

GEN3SYS Drill Insert Holders

20 Series | Diameter Range: 0.7874" - 0.8660" (20.00 mm - 21.99 mm)

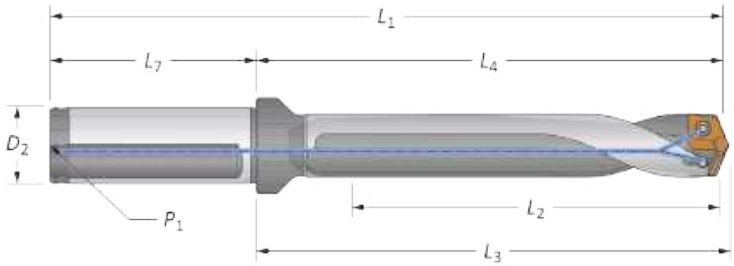

Straight and Helical

	Flute	Length	Body L_2	Body L_4	Body L_3	Body L_1	Shank L_7	Shank D_2	Shank P_1	Shank Flat	Part No.
i	Straight	3xD	2-19/32	3-15/16	4-3/64	6-7/32	2-9/32	1	1/8	YES	**60320S-100F**
		5xD	4-21/64	5-43/64	5-25/32	7-61/64	2-9/32	1	1/8	YES	**60520S-100F**
		7xD	6-1/16	7-13/32	7-33/64	9-11/16	2-9/32	1	1/8	YES	**60720S-100F**
	Helical	Stub	15/16	2-17/64	2-3/8	4-35/64	2-9/32	1	1/8	YES	**60120H-100F**
		3xD	2-19/32	3-15/16	4-3/64	6-7/32	2-9/32	1	1/8	YES	**60320H-100F**
		3xD	2-19/32	3-15/16	4-3/64	6-7/32	2-9/32	1	1/8	NO	**60320H-100C**
		5xD	4-21/64	5-43/64	5-25/32	7-61/64	2-9/32	1	1/8	YES	**60520H-100F**
		5xD	4-21/64	5-43/64	5-25/32	7-61/64	2-9/32	1	1/8	NO	**60520H-100C**
		7xD	6-1/16	7-13/32	7-33/64	9-11/16	2-9/32	1	1/8	YES	**60720H-100F**
		7xD	6-1/16	7-13/32	7-33/64	9-11/16	2-9/32	1	1/8	NO	**60720H-100C**
m	Straight	3xD	66.0	100.0	102.9	156.0	56.0	25.0	1/8*	YES	**60320S-25FM**
		5xD	110.0	144.0	146.9	200.0	56.0	25.0	1/8*	YES	**60520S-25FM**
		7xD	153.9	187.0	190.9	243.0	56.0	25.0	1/8*	YES	**60720S-25FM**
	Helical	Stub	24.0	57.6	60.4	113.6	56.0	25.0	1/8*	YES	**60120H-25FM**
		3xD	66.0	100.0	102.9	156.0	56.0	25.0	1/8*	YES	**60320H-25FM**
		3xD	66.0	100.0	102.9	156.0	56.0	25.0	1/8*	NO	**60320H-25CM**
		5xD	110.0	144.0	146.9	200.0	56.0	25.0	1/8*	YES	**60520H-25FM**
		5xD	110.0	144.0	146.9	200.0	56.0	25.0	1/8*	NO	**60520H-25CM**
		7xD	153.9	187.0	190.9	243.0	56.0	25.0	1/8*	YES	**60720H-25FM**
		7xD	153.9	187.0	190.9	243.0	56.0	25.0	1/8*	NO	**60720H-25CM**

*Thread to BSP and ISO 7-1

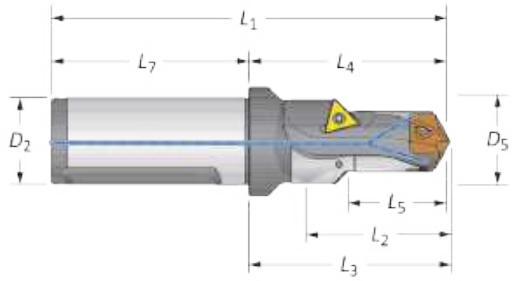

Drill / Chamfer

	Step D_5	Step L_5	Body L_2	Body L_4	Body L_3	Body L_1	Shank L_7	Shank D_2	Part No.	Chamfer Insert
i	1-5/64	1-3/16	1-29/64	2-17/64	2-3/8	4-35/64	2-9/32	1	**60120C45-100F**	**TCMT-110204**
m	27.2	30.0	37.1	57.6	60.4	113.6	56.0	25.0	**60120C45-25FM**	**TCMT-110204**

Connection Accessories

Insert Screws	Nylon Locking Screws	Insert Driver	Preset Torque Hand Driver	Replacement Tips	Admissible Tightening Torque*
7375-IP9-1	**7375N-IP9-1**	**8IP-9**	**8IP-9TL**	**8IP-9B**	27.0 in-lbs (305 N-cm)

*Tightening torques are calculated with a friction coefficient of μ = 0.14 and develop 90% of ultimate yield strength.

i = Imperial (in)
m = Metric (mm)

Chamfer inserts sold separately in multiples of 10 | Screws sold in multiples of 10

GEN3SYS XT Pro Drill Inserts

22 Series | Diameter Range: 0.8661" - 0.9448" (22.00 mm - 23.99 mm)

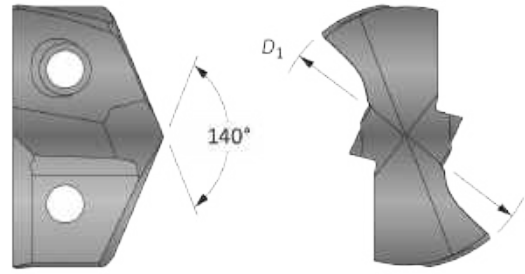

Insert						
Fractional Equivalent	D_1 inch	D_1 mm	Part No. P	Part No. K	Part No. N	Part No. M
–	0.8661	22.00	**XTP22-22.00**	**XTK22-22.00**	**XTN22-22.00**	**XTM22-22.00**
–	0.8701	22.10	**XTP22-22.10**	**XTK22-22.10**	**XTN22-22.10**	**XTM22-22.10**
–	0.8740	22.20	**XTP22-22.20**	**XTK22-22.20**	**XTN22-22.20**	**XTM22-22.20**
7/8	0.8752	22.23	**XTP22-22.23**	**XTK22-22.23**	**XTN22-22.23**	**XTM22-22.23**
–	0.8780	22.30	**XTP22-22.30**	**XTK22-22.30**	**XTN22-22.30**	**XTM22-22.30**
–	0.8819	22.40	**XTP22-22.40**	**XTK22-22.40**	**XTN22-22.40**	**XTM22-22.40**
–	0.8858	22.50	**XTP22-22.50**	**XTK22-22.50**	**XTN22-22.50**	**XTM22-22.50**
57/64	0.8906	22.62	**XTP22-22.62**	**XTK22-22.62**	**XTN22-22.62**	**XTM22-22.62**
–	0.8937	22.70	**XTP22-22.70**	**XTK22-22.70**	**XTN22-22.70**	**XTM22-22.70**
–	0.8976	22.80	**XTP22-22.80**	**XTK22-22.80**	**XTN22-22.80**	**XTM22-22.80**
–	0.9016	22.90	**XTP22-22.90**	**XTK22-22.90**	**XTN22-22.90**	**XTM22-22.90**
–	0.9055	23.00	**XTP22-23.00**	**XTK22-23.00**	**XTN22-23.00**	**XTM22-23.00**
29/32	0.9063	23.02	**XTP22-23.02**	**XTK22-23.02**	**XTN22-23.02**	**XTM22-23.02**
–	0.9094	23.10	**XTP22-23.10**	**XTK22-23.10**	**XTN22-23.10**	**XTM22-23.10**
–	0.9134	23.20	**XTP22-23.20**	**XTK22-23.20**	**XTN22-23.20**	**XTM22-23.20**
–	0.9173	23.30	**XTP22-23.30**	**XTK22-23.30**	**XTN22-23.30**	**XTM22-23.30**
59/64	0.9220	23.42	**XTP22-23.42**	**XTK22-23.42**	**XTN22-23.42**	**XTM22-23.42**
–	0.9252	23.50	**XTP22-23.50**	**XTK22-23.50**	**XTN22-23.50**	**XTM22-23.50**
–	0.9291	23.60	**XTP22-23.60**	**XTK22-23.60**	**XTN22-23.60**	**XTM22-23.60**
–	0.9331	23.70	**XTP22-23.70**	**XTK22-23.70**	**XTN22-23.70**	**XTM22-23.70**
15/16	0.9374	23.81	**XTP22-23.81**	**XTK22-23.81**	**XTN22-23.81**	**XTM22-23.81**
–	0.9409	23.90	**XTP22-23.90**	**XTK22-23.90**	**XTN22-23.90**	**XTM22-23.90**

Inserts sold in multiples of 1.

A20: 68 - 83
Key on A20: 1

A20: 6 - 9

Sizes not shown are available upon request. When ordering, please follow the example below:	
Imperial:	0.5180", Steel, 13 series = use Part No. **XTP13-13.16**
Metric:	13.16 mm, Steel, 13 series = use Part No. **XTP13-13.16**

GEN3SYS XT Pro Drill Insert Holders

22 Series | Diameter Range: 0.8661" - 0.9448" (22.00 mm - 23.99 mm)

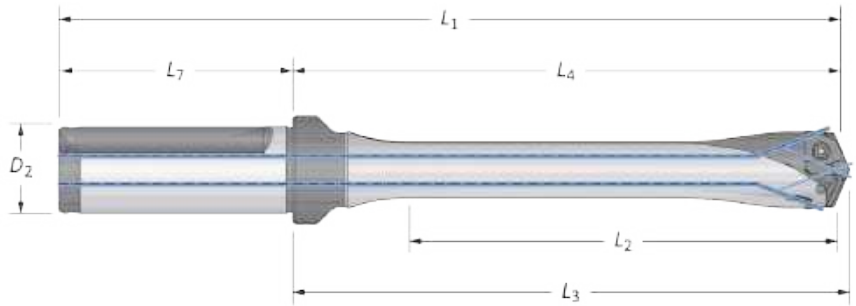

	Flute	Length	Body L_2	Body L_4	Body L_3	Body L_1	Shank L_7	Shank D_2	Shank Flat	Part No.
i	Straight	3xD	2-53/64	4-9/64	4-17/64	6-27/64	2-9/32	1	YES	**HXT0322S-100F**
		3xD	2-53/64	4-9/64	4-17/64	6-27/64	2-9/32	1	NO	**HXT0322S-100C**
		5xD	4-23/32	6-1/32	6-5/32	8-5/16	2-9/32	1	YES	**HXT0522S-100F**
		5xD	4-23/32	6-1/32	6-5/32	8-5/16	2-9/32	1	NO	**HXT0522S-100C**
		7xD	6-39/64	7-59/64	8-3/64	10-13/64	2-9/32	1	YES	**HXT0722S-100F**
		7xD	6-39/64	7-59/64	8-3/64	10-13/64	2-9/32	1	NO	**HXT0722S-100C**
		10xD	9-7/16	10-3/4	10-7/8	13-1/32	2-9/32	1	YES	⚠ **HXT1022S-100F**
		10xD	9-7/16	10-3/4	10-7/8	13-1/32	2-9/32	1	NO	⚠ **HXT1022S-100C**
		12xD	11-11/32	12-41/64	12-3/4	14-59/64	2-9/32	1	YES	⚠ **HXT1222S-100F**
		12xD	11-11/32	12-41/64	12-3/4	14-59/64	2-9/32	1	NO	⚠ **HXT1222S-100C**
m	Straight	3xD	72.0	105.1	108.3	161.1	56.0	25.0	YES	**HXT0322S-25FM**
		3xD	72.0	105.1	108.3	161.1	56.0	25.0	NO	**HXT0322S-25CM**
		5xD	120.0	153.2	156.2	209.2	56.0	25.0	YES	**HXT0522S-25FM**
		5xD	120.0	153.2	156.2	209.2	56.0	25.0	NO	**HXT0522S-25CM**
		7xD	167.9	201.2	204.2	257.2	56.0	25.0	YES	**HXT0722S-25FM**
		7xD	167.9	201.2	204.2	257.2	56.0	25.0	NO	**HXT0722S-25CM**
		10xD	239.9	273.0	276.2	329.0	56.0	25.0	YES	⚠ **HXT1022S-25FM**
		10xD	239.9	273.0	276.2	329.0	56.0	25.0	NO	⚠ **HXT1022S-25CM**
		12xD	288.0	321.2	324.2	377.2	56.0	25.0	YES	⚠ **HXT1222S-25FM**
		12xD	288.0	321.2	324.2	377.2	56.0	25.0	NO	⚠ **HXT1222S-25CM**

Connection Accessories

Insert Screws	Nylon Locking Screws	Insert Driver	Preset Torque Hand Driver	Replacement Tips	Admissible Tightening Torque*
739-IP9-1	**739N-IP9-1**	**8IP-9**	**8IP-9TL**	**8IP-9B**	27.0 in-lbs (305 N-cm)

*Tightening torques are calculated with a friction coefficient of μ = 0.14 and develop 90% of ultimate yield strength.

⚠ **WARNING** Refer to Speed and Feed charts for recommended adjustments to speeds and feeds. Refer to page A20: 86 for deep hole drilling guidelines in this section of the catalog. Visit **www.alliedmachine.com/DeepHoleGuidelines** for the most up-to-date information and procedures. Factory technical assistance is available for your specific applications through our Application Engineering Team.
ext: **7611** | *email:* **appeng@alliedmachine.com**

i = Imperial (in)
m = Metric (mm)
Screws sold in multiples of 10

GEN3SYS XT Drill Inserts

22 Series | Diameter Range: 0.8661" - 0.9448" (22.00 mm - 23.99 mm)

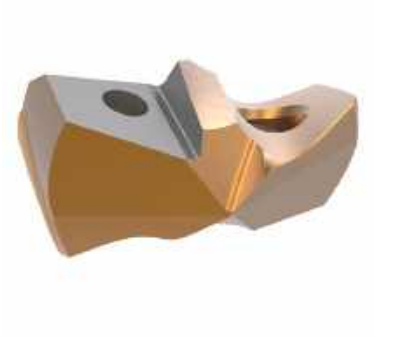

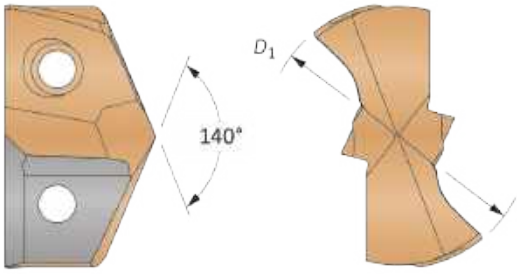

Insert							
Carbide Substrate	**Fractional Equivalent**	**D_1 inch**	**D_1 mm**	**Standard Part No.**	**Low Rake Part No.**	**Cast Iron Part No.**	**Stainless Part No.**
C1 (K35)		0.8661	22.00	**7C122P-22**	**7C122P-22LR**	–	–
	7/8	0.8750	22.23	**7C122P-0028**	**7C122P-0028LR**	–	–
	57/64	0.8906	22.61	**7C122P-.890**	**7C122P-.890LR**	–	–
		0.9055	23.00	**7C122P-23**	**7C122P-23LR**	–	–
	29/32	0.9063	23.02	**7C122P-0029**	**7C122P-0029LR**	–	–
	59/64	0.9219	23.42	**7C122P-.921**	**7C122P-.921LR**	–	–
	15/16	0.9375	23.81	**7C122P-0030**	**7C122P-0030LR**	–	–
C2 (K20)		0.8661	22.00	**7C222P-22**	**7C222P-22LR**	**7C222P-22CI**	**7C222P-22AS**
	7/8	0.8750	22.23	**7C222P-0028**	**7C222P-0028LR**	**7C222P-0028CI**	**7C222P-0028AS**
	57/64	0.8906	22.61	**7C222P-.890**	**7C222P-.890LR**	**7C222P-.890CI**	**7C222P-.890AS**
		0.9055	23.00	**7C222P-23**	**7C222P-23LR**	**7C222P-23CI**	**7C222P-23AS**
	29/32	0.9063	23.02	**7C222P-0029**	**7C222P-0029LR**	**7C222P-0029CI**	**7C222P-0029AS**
	59/64	0.9219	23.42	**7C222P-.921**	**7C222P-.921LR**	**7C222P-.921CI**	**7C222P-.921AS**
	15/16	0.9375	23.81	**7C222P-0030**	**7C222P-0030LR**	**7C222P-0030CI**	**7C222P-0030AS**

Inserts sold in multiples of 1.

A20: 68 - 83
Key on A20: 1

A20: 6 - 9

Sizes not shown are available upon request. When ordering, please follow the example below:	
Imperial:	0.5200", 13 series, C2 = use Part No. **7C213P-.5200**
Metric:	13.20 mm, 13 series, C2 = use Part No. **7C213P-13.20**

GEN3SYS Drill Insert Holders

22 Series | Diameter Range: 0.8661" - 0.9448" (22.00 mm - 23.99 mm)

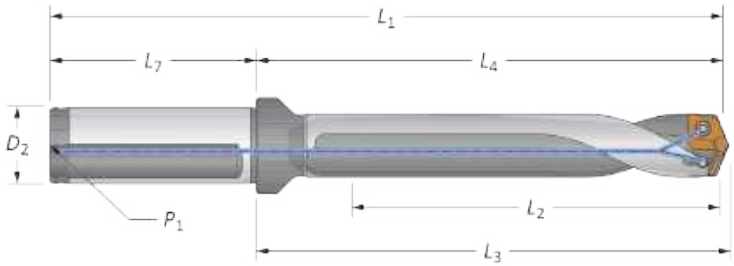

Straight and Helical

	Flute	Length	Body L_2	Body L_4	Body L_3	Body L_1	Shank L_7	Shank D_2	Shank P_1	Flat	Part No.
i	Straight	3xD	2-53/64	4-9/64	4-17/64	6-27/64	2-9/32	1	1/8	YES	**60322S-100F**
		5xD	4-23/32	6-1/32	6-5/32	8-5/16	2-9/32	1	1/8	YES	**60522S-100F**
		7xD	6-39/64	7-59/64	8-3/64	10-13/64	2-9/32	1	1/8	YES	**60722S-100F**
	Helical	Stub	1-1/16	2-23/64	2-31/64	4-41/64	2-9/32	1	1/8	YES	**60122H-100F**
		3xD	2-53/64	4-9/64	4-17/64	6-27/64	2-9/32	1	1/8	YES	**60322H-100F**
		3xD	2-53/64	4-9/64	4-17/64	6-27/64	2-9/32	1	1/8	NO	**60322H-100C**
		5xD	4-23/32	6-1/32	6-5/32	8-5/16	2-9/32	1	1/8	YES	**60522H-100F**
		5xD	4-23/32	6-1/32	6-5/32	8-5/16	2-9/32	1	1/8	NO	**60522H-100C**
		7xD	6-39/64	7-59/64	8-3/64	10-13/64	2-9/32	1	1/8	YES	**60722H-100F**
		7xD	6-39/64	7-59/64	8-3/64	10-13/64	2-9/32	1	1/8	NO	**60722H-100C**
m	Straight	3xD	72.0	105.1	108.3	161.1	56.0	25.0	1/8*	YES	**60322S-25FM**
		5xD	120.0	153.2	156.2	209.2	56.0	25.0	1/8*	YES	**60522S-25FM**
		7xD	167.9	201.2	204.2	257.2	56.0	25.0	1/8*	YES	**60722S-25FM**
	Helical	Stub	27.0	60.1	63.0	116.1	56.0	25.0	1/8*	YES	**60122H-25FM**
		3xD	72.0	105.1	108.3	161.1	56.0	25.0	1/8*	YES	**60322H-25FM**
		3xD	72.0	105.1	108.3	161.1	56.0	25.0	1/8*	NO	**60322H-25CM**
		5xD	120.0	153.2	156.2	209.2	56.0	25.0	1/8*	YES	**60522H-25FM**
		5xD	120.0	153.2	156.2	209.2	56.0	25.0	1/8*	NO	**60522H-25CM**
		7xD	167.9	201.2	204.2	257.2	56.0	25.0	1/8*	YES	**60722H-25FM**
		7xD	167.9	201.2	204.2	257.2	56.0	25.0	1/8*	NO	**60722H-25CM**

*Thread to BSP and ISO 7-1

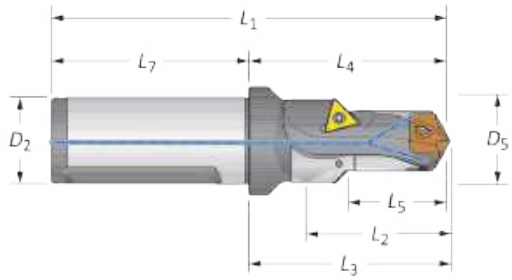

Drill / Chamfer

	Step D_5	Step L_5	Body L_2	Body L_4	Body L_3	Body L_1	Shank L_7	Shank D_2	Part No.	Chamfer Insert
i	1-9/64	1-19/64	1-19/32	2-23/64	2-31/64	4-41/64	2-9/32	1	**60122C45-100F**	**TCMT-110204**
m	29.0	33.0	40.5	60.0	63.0	116.0	56.0	25.0	**60122C45-25FM**	**TCMT-110204**

Connection Accessories

Insert Screws	Nylon Locking Screws	Insert Driver	Preset Torque Hand Driver	Replacement Tips	Admissible Tightening Torque*
739-IP9-1	**739N-IP9-1**	**8IP-9**	**8IP-9TL**	**8IP-9B**	27.0 in-lbs (305 N-cm)

*Tightening torques are calculated with a friction coefficient of μ = 0.14 and develop 90% of ultimate yield strength.

i = Imperial (in)
m = Metric (mm)

Chamfer inserts sold separately in multiples of 10 | Screws sold in multiples of 10

GEN3SYS XT Pro Drill Inserts

24 Series | Diameter Range: 0.9449" - 1.0235" (24.00 mm - 25.99 mm)

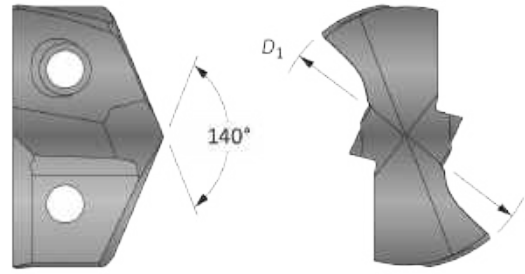

Insert						
Fractional Equivalent	D_1 inch	D_1 mm	Part No. P	Part No. K	Part No. N	Part No. M
–	0.9449	24.00	XTP24-24.00	XTK24-24.00	XTN24-24.00	XTM24-24.00
–	0.9488	24.10	XTP24-24.10	XTK24-24.10	XTN24-24.10	XTM24-24.10
–	0.9528	24.20	XTP24-24.20	XTK24-24.20	XTN24-24.20	XTM24-24.20
–	0.9567	24.30	XTP24-24.30	XTK24-24.30	XTN24-24.30	XTM24-24.30
–	0.9606	24.40	XTP24-24.40	XTK24-24.40	XTN24-24.40	XTM24-24.40
–	0.9646	24.50	XTP24-24.50	XTK24-24.50	XTN24-24.50	XTM24-24.50
31/32	0.9689	24.61	XTP24-24.61	XTK24-24.61	XTN24-24.61	XTM24-24.61
–	0.9724	24.70	XTP24-24.70	XTK24-24.70	XTN24-24.70	XTM24-24.70
–	0.9764	24.80	XTP24-24.80	XTK24-24.80	XTN24-24.80	XTM24-24.80
–	0.9803	24.90	XTP24-24.90	XTK24-24.90	XTN24-24.90	XTM24-24.90
63/64	0.9843	25.00	XTP24-25.00	XTK24-25.00	XTN24-25.00	XTM24-25.00
–	0.9882	25.10	XTP24-25.10	XTK24-25.10	XTN24-25.10	XTM24-25.10
–	0.9921	25.20	XTP24-25.20	XTK24-25.20	XTN24-25.20	XTM24-25.20
–	0.9961	25.30	XTP24-25.30	XTK24-25.30	XTN24-25.30	XTM24-25.30
1	1.0000	25.40	XTP24-25.40	XTK24-25.40	XTN24-25.40	XTM24-25.40
–	1.0039	25.50	XTP24-25.50	XTK24-25.50	XTN24-25.50	XTM24-25.50
–	1.0079	25.60	XTP24-25.60	XTK24-25.60	XTN24-25.60	XTM24-25.60
–	1.0118	25.70	XTP24-25.70	XTK24-25.70	XTN24-25.70	XTM24-25.70
1-1/64	1.0150	25.78	XTP24-25.78	XTK24-25.78	XTN24-25.78	XTM24-25.78
–	1.0197	25.90	XTP24-25.90	XTK24-25.90	XTN24-25.90	XTM24-25.90

Inserts sold in multiples of 1.

A20: 68 - 83
Key on A20: 1

A20: 6 - 9

Sizes not shown are available upon request. When ordering, please follow the example below:	
Imperial:	0.5180", Steel, 13 series = use Part No. **XTP13-13.16**
Metric:	13.16 mm, Steel, 13 series = use Part No. **XTP13-13.16**

GEN3SYS XT Pro Drill Insert Holders

24 Series | Diameter Range: 0.9449" - 1.0235" (24.00 mm - 25.99 mm)

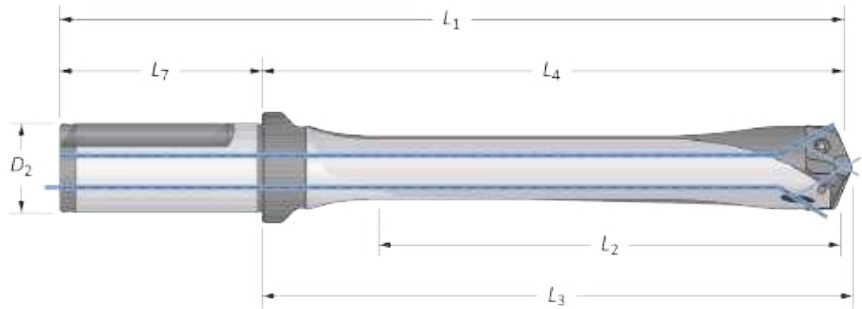

	Flute	Length	Body L_2	Body L_4	Body L_3	Body L_1	Shank L_7	Shank D_2	Shank Flat	Part No.
i	Straight	3xD	3-1/16	4-31/64	4-19/32	6-49/64	2-9/32	1	YES	**HXT0324S-100F**
		3xD	3-1/16	4-31/64	4-19/32	6-49/64	2-9/32	1	NO	**HXT0324S-100C**
		5xD	5-7/64	6-17/32	6-41/64	8-13/16	2-9/32	1	YES	**HXT0524S-100F**
		5xD	5-7/64	6-17/32	6-41/64	8-13/16	2-9/32	1	NO	**HXT0524S-100C**
		7xD	7-5/32	8-37/64	8-11/16	10-55/64	2-9/32	1	YES	**HXT0724S-100F**
		7xD	7-5/32	8-37/64	8-11/16	10-55/64	2-9/32	1	NO	**HXT0724S-100C**
		10xD	10-15/64	11-41/64	11-49/64	13-59/64	2-9/32	1	YES	⚠ **HXT1024S-100F**
		10xD	10-15/64	11-41/64	11-49/64	13-59/64	2-9/32	1	NO	⚠ **HXT1024S-100C**
		12xD	12-9/32	13-11/16	13-51/64	15-31/32	2-9/32	1	YES	⚠ **HXT1224S-100F**
		12xD	12-9/32	13-11/16	13-15/64	15-31/32	2-9/32	1	NO	⚠ **HXT1224S-100C**
m	Straight	3xD	78.0	113.9	116.8	169.9	56.0	25.0	YES	**HXT0324S-25FM**
		3xD	78.0	113.9	116.8	169.9	56.0	25.0	NO	**HXT0324S-25CM**
		5xD	130.0	165.9	168.7	221.9	56.0	25.0	YES	**HXT0524S-25FM**
		5xD	130.0	165.9	168.7	221.9	56.0	25.0	NO	**HXT0524S-25CM**
		7xD	181.9	217.9	220.7	273.9	56.0	25.0	YES	**HXT0724S-25FM**
		7xD	181.9	217.9	220.7	273.9	56.0	25.0	NO	**HXT0724S-25CM**
		10xD	259.9	295.7	298.7	351.7	56.0	25.0	YES	⚠ **HXT1024S-25FM**
		10xD	259.9	295.7	298.7	351.7	56.0	25.0	NO	⚠ **HXT1024S-25CM**
		12xD	312.0	347.7	350.7	403.7	56.0	25.0	YES	⚠ **HXT1224S-25FM**
		12xD	312.0	347.7	350.7	403.7	56.0	25.0	NO	⚠ **HXT1224S-25CM**

Connection Accessories

Insert Screws	Nylon Locking Screws	Insert Driver	Preset Torque Hand Driver	Replacement Tips	Admissible Tightening Torque*
739-IP9-1	**739N-IP9-1**	**8IP-9**	**8IP-9TL**	**8IP-9B**	27.0 in-lbs (305 N-cm)

*Tightening torques are calculated with a friction coefficient of μ = 0.14 and develop 90% of ultimate yield strength.

⚠ **WARNING** Refer to Speed and Feed charts for recommended adjustments to speeds and feeds. Refer to page A20: 86 for deep hole drilling guidelines in this section of the catalog. Visit **www.alliedmachine.com/DeepHoleGuidelines** for the most up-to-date information and procedures. Factory technical assistance is available for your specific applications through our Application Engineering Team.
ext: **7611** | *email:* **appeng@alliedmachine.com**

i = Imperial (in)
m = Metric (mm)
Screws sold in multiples of 10

GEN3SYS XT Drill Inserts

24 Series | Diameter Range: 0.9449" - 1.0235" (24.00 mm - 25.99 mm)

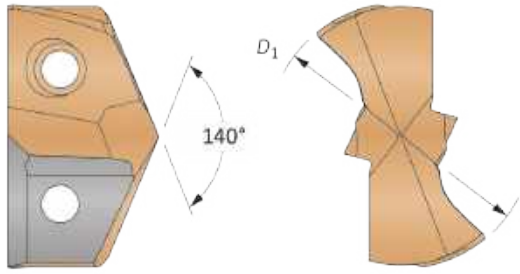

Insert							
Carbide Substrate	**Fractional Equivalent**	**D_1 inch**	**D_1 mm**	**Standard Part No.**	**Low Rake Part No.**	**Cast Iron Part No.**	**Stainless Part No.**
C1 (K35)	–	0.9449	24.00	**7C124P-24**	**7C124P-24LR**	–	–
	31/32	0.9688	24.61	**7C124P-0031**	**7C124P-0031LR**	–	–
	63/64	0.9843	25.00	**7C124P-25**	**7C124P-25LR**	–	–
	1	1.0000	25.40	**7C124P-0100**	**7C124P-0100LR**	–	–
	–	1.0080	25.60	**7C124P-1.008**	**7C124P-1.008LR**	–	–
	1-1/64	1.0156	25.78	**7C124P-1.015**	**7C124P-1.015LR**	–	–
C2 (K20)	–	0.9449	24.00	**7C224P-24**	**7C224P-24LR**	**7C224P-24CI**	**7C224P-24AS**
	31/32	0.9688	24.61	**7C224P-0031**	**7C224P-0031LR**	**7C224P-0031CI**	**7C224P-0031AS**
	63/64	0.9843	25.00	**7C224P-25**	**7C224P-25LR**	**7C224P-25CI**	**7C224P-25AS**
	1	1.0000	25.40	**7C224P-0100**	**7C224P-0100LR**	**7C224P-0100CI**	**7C224P-0100AS**
	–	1.0080	25.60	**7C224P-1.008**	**7C224P-1.008LR**	**7C224P-1.008CI**	**7C224P-1.008AS**
	1-1/64	1.0156	25.78	**7C224P-1.015**	**7C224P-1.015LR**	**7C224P-1.015CI**	**7C224P-1.015AS**

Inserts sold in multiples of 1.

A20: 68 - 83
Key on A20: 1

A20: 6 - 9

Sizes not shown are available upon request. When ordering, please follow the example below:	
Imperial:	0.5200", 13 series, C2 = use Part No. **7C213P-.5200**
Metric:	13.20 mm, 13 series, C2 = use Part No. **7C213P-13.20**

GEN3SYS Drill Insert Holders

24 Series | Diameter Range: 0.9449" - 1.0235" (24.00 mm - 25.99 mm)

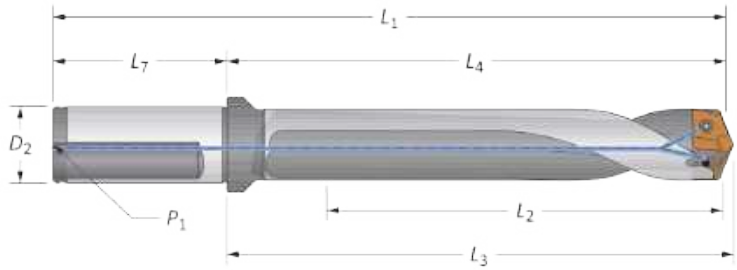

Straight and Helical

	Flute	Length	Body L_2	Body L_4	Body L_3	Body L_1	Shank L_7	Shank D_2	Shank P_1	Shank Flat	Part No.
i	Straight	3xD	3-1/16	4-31/64	4-19/32	6-49/64	2-9/32	1	1/8	YES	**60324S-100F**
		5xD	5-7/64	6-17/32	6-41/64	8-13/16	2-9/32	1	1/8	YES	**60524S-100F**
		7xD	7-5/32	8-37/64	8-11/16	10-55/64	2-9/32	1	1/8	YES	**60724S-100F**
	Helical	Stub	1-1/8	2-17/32	2-41/64	4-13/16	2-9/32	1	1/8	YES	**60124H-100F**
		3xD	3-1/16	4-31/64	4-19/32	6-49/64	2-9/32	1	1/8	YES	**60324H-100F**
		3xD	3-1/16	4-31/64	4-19/32	6-49/64	2-9/32	1	1/8	NO	**60324H-100C**
		5xD	5-7/64	6-17/32	6-41/64	8-13/16	2-9/32	1	1/8	YES	**60524H-100F**
		5xD	5-7/64	6-17/32	6-41/64	8-13/16	2-9/32	1	1/8	NO	**60524H-100C**
		7xD	7-5/32	8-37/64	8-11/16	10-55/64	2-9/32	1	1/8	YES	**60724H-100F**
		7xD	7-5/32	8-37/64	8-11/16	10-55/64	2-9/32	1	1/8	NO	**60724H-100C**
m	Straight	3xD	78.0	113.9	116.8	169.9	56.0	25.0	1/8*	YES	**60324S-25FM**
		5xD	130.0	165.9	168.7	221.9	56.0	25.0	1/8*	YES	**60524S-25FM**
		7xD	181.9	217.9	220.7	273.9	56.0	25.0	1/8*	YES	**60724S-25FM**
	Helical	Stub	28.5	64.2	67.1	120.1	56.0	25.0	1/8*	YES	**60124H-25FM**
		3xD	78.0	113.9	116.8	169.9	56.0	25.0	1/8*	YES	**60324H-25FM**
		3xD	78.0	113.9	116.8	169.9	56.0	25.0	1/8*	NO	**60324H-25CM**
		5xD	130.0	165.9	168.7	221.9	56.0	25.0	1/8*	YES	**60524H-25FM**
		5xD	130.0	165.9	168.7	221.9	56.0	25.0	1/8*	NO	**60524H-25CM**
		7xD	181.9	217.9	220.7	273.9	56.0	25.0	1/8*	YES	**60724H-25FM**
		7xD	181.9	217.9	220.7	273.9	56.0	25.0	1/8*	NO	**60724H-25CM**

*Thread to BSP and ISO 7-1

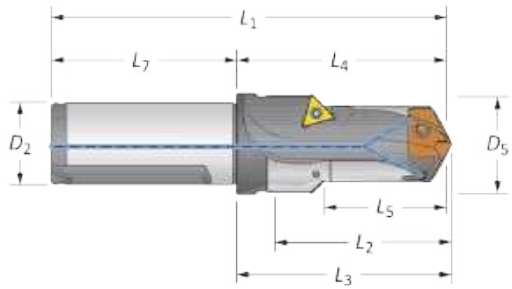

Drill / Chamfer

	Step D_5	Step L_5	Body L_2	Body L_4	Body L_3	Body L_1	Shank L_7	Shank D_2	Part No.	Chamfer Insert
i	1-7/32	1-27/64	1-51/64	2-17/32	2-41/64	4-13/16	2-9/32	1	**60124C45-100F**	**TCMT-110204**
m	31.0	36.0	45.5	64.2	67.1	120.2	56.0	25.0	**60124C45-25FM**	**TCMT-110204**

Connection Accessories

Insert Screws	Nylon Locking Screws	Insert Driver	Preset Torque Hand Driver	Replacement Tips	Admissible Tightening Torque*
739-IP9-1	**739N-IP9-1**	**8IP-9**	**8IP-9TL**	**8IP-9B**	27.0 in-lbs (305 N-cm)

*Tightening torques are calculated with a friction coefficient of μ = 0.14 and develop 90% of ultimate yield strength.

i = Imperial (in)
m = Metric (mm)

Chamfer inserts sold separately in multiples of 10 | Screws sold in multiples of 10

GEN3SYS XT Pro Drill Inserts

26 Series | Diameter Range: 1.0236" - 1.1416" (26.00 mm - 28.99 mm)

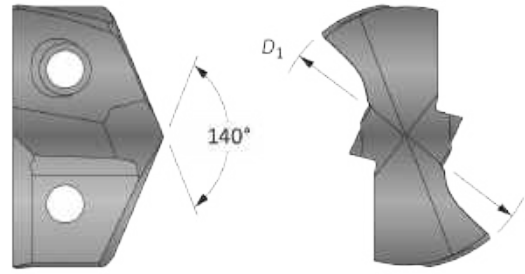

Insert						
Fractional Equivalent	D_1 inch	D_1 mm	Part No.	Part No.	Part No.	Part No.
			P	K	N	M
–	1.0236	26.00	XTP26-26.00	XTK26-26.00	XTN26-26.00	XTM26-26.00
–	1.0276	26.10	XTP26-26.10	XTK26-26.10	XTN26-26.10	XTM26-26.10
1-1/32	1.0315	26.20	XTP26-26.20	XTK26-26.20	XTN26-26.20	XTM26-26.20
–	1.0354	26.30	XTP26-26.30	XTK26-26.30	XTN26-26.30	XTM26-26.30
–	1.0394	26.40	XTP26-26.40	XTK26-26.40	XTN26-26.40	XTM26-26.40
–	1.0433	26.50	XTP26-26.50	XTK26-26.50	XTN26-26.50	XTM26-26.50
1-3/64	1.0469	26.59	XTP26-26.59	XTK26-26.59	XTN26-26.59	XTM26-26.59
–	1.0472	26.60	XTP26-26.60	XTK26-26.60	XTN26-26.60	XTM26-26.60
–	1.0512	26.70	XTP26-26.70	XTK26-26.70	XTN26-26.70	XTM26-26.70
–	1.0551	26.80	XTP26-26.80	XTK26-26.80	XTN26-26.80	XTM26-26.80
–	1.0591	26.90	XTP26-26.90	XTK26-26.90	XTN26-26.90	XTM26-26.90
1-1/16	1.0626	26.99	XTP26-26.99	XTK26-26.99	XTN26-26.99	XTM26-26.99
–	1.0630	27.00	XTP26-27.00	XTK26-27.00	XTN26-27.00	XTM26-27.00
–	1.0669	27.10	XTP26-27.10	XTK26-27.10	XTN26-27.10	XTM26-27.10
–	1.0709	27.20	XTP26-27.20	XTK26-27.20	XTN26-27.20	XTM26-27.20
–	1.0748	27.30	XTP26-27.30	XTK26-27.30	XTN26-27.30	XTM26-27.30
–	1.0787	27.40	XTP26-27.40	XTK26-27.40	XTN26-27.40	XTM26-27.40
–	1.0827	27.50	XTP26-27.50	XTK26-27.50	XTN26-27.50	XTM26-27.50
–	1.0866	27.60	XTP26-27.60	XTK26-27.60	XTN26-27.60	XTM26-27.60
–	1.0906	27.70	XTP26-27.70	XTK26-27.70	XTN26-27.70	XTM26-27.70
1-3/32	1.0937	27.78	XTP26-27.78	XTK26-27.78	XTN26-27.78	XTM26-27.78
–	1.0984	27.90	XTP26-27.90	XTK26-27.90	XTN26-27.90	XTM26-27.90
–	1.1024	28.00	XTP26-28.00	XTK26-28.00	XTN26-28.00	XTM26-28.00
–	1.1063	28.10	XTP26-28.10	XTK26-28.10	XTN26-28.10	XTM26-28.10
1-7/64	1.1091	28.17	XTP26-28.17	XTK26-28.17	XTN26-28.17	XTM26-28.17
–	1.1102	28.20	XTP26-28.20	XTK26-28.20	XTN26-28.20	XTM26-28.20
–	1.1142	28.30	XTP26-28.30	XTK26-28.30	XTN26-28.30	XTM26-28.30
–	1.1181	28.40	XTP26-28.40	XTK26-28.40	XTN26-28.40	XTM26-28.40
–	1.1220	28.50	XTP26-28.50	XTK26-28.50	XTN26-28.50	XTM26-28.50
1-1/8	1.1252	28.58	XTP26-28.58	XTK26-28.58	XTN26-28.58	XTM26-28.58
–	1.1299	28.70	XTP26-28.70	XTK26-28.70	XTN26-28.70	XTM26-28.70
–	1.1339	28.80	XTP26-28.80	XTK26-28.80	XTN26-28.80	XTM26-28.80
–	1.1378	28.90	XTP26-28.90	XTK26-28.90	XTN26-28.90	XTM26-28.90

Inserts sold in multiples of 1.

A20: 68 - 83
Key on A20: 1

A20: 6 - 9

Sizes not shown are available upon request. When ordering, please follow the example below:	
Imperial:	0.5180", Steel, 13 series = use Part No. **XTP13-13.16**
Metric:	13.16 mm, Steel, 13 series = use Part No. **XTP13-13.16**

GEN3SYS XT Pro Drill Insert Holders

26 Series | Diameter Range: 1.0236" - 1.1416" (26.00 mm - 28.99 mm)

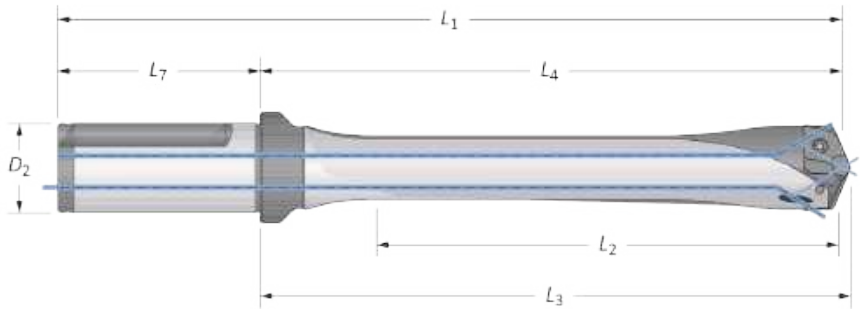

	Flute	Length	Body L_2	Body L_4	Body L_3	Body L_1	Shank L_7	Shank D_2	Shank Flat	Part No.
i	Straight	3xD	3-27/64	5-1/16	5-11/64	7-11/32	2-9/32	1-1/4	YES	**HXT0326S-125F**
		3xD	3-27/64	5-1/16	5-11/64	7-11/32	2-9/32	1-1/4	NO	**HXT0326S-125C**
		5xD	5-45/64	7-11/32	7-29/64	9-5/8	2-9/32	1-1/4	YES	**HXT0526S-125F**
		5xD	5-45/64	7-11/32	7-29/64	9-5/8	2-9/32	1-1/4	NO	**HXT0526S-125C**
		7xD	7-63/64	9-5/8	9-47/64	11-29/32	2-9/32	1-1/4	YES	**HXT0726S-125F**
		7xD	7-63/64	9-5/8	9-47/64	11-29/32	2-9/32	1-1/4	NO	**HXT0726S-125C**
		10xD	11-13/32	13-3/64	13-11/64	15-21/64	2-9/32	1-1/4	YES	⚠ **HXT1026S-125F**
		10xD	11-13/32	13-3/64	13-11/64	15-21/64	2-9/32	1-1/4	NO	⚠ **HXT1026S-125C**
		12xD	13-45/64	15-11/32	15-29/64	17-5/8	2-9/32	1-1/4	YES	⚠ **HXT1226S-125F**
		12xD	13-45/64	15-11/32	15-29/64	17-5/8	2-9/32	1-1/4	NO	⚠ **HXT1226S-125C**
m	Straight	3xD	87.0	128.6	131.4	188.6	60.0	32.0	YES	**HXT0326S-32FM**
		3xD	87.0	128.6	131.4	188.6	60.0	32.0	NO	**HXT0326S-32CM**
		5xD	145.0	186.5	189.4	246.5	60.0	32.0	YES	**HXT0526S-32FM**
		5xD	145.0	186.5	189.4	246.5	60.0	32.0	NO	**HXT0526S-32CM**
		7xD	202.9	244.5	247.4	304.5	60.0	32.0	YES	**HXT0726S-32FM**
		7xD	202.9	244.5	247.4	304.5	60.0	32.0	NO	**HXT0726S-32CM**
		10xD	289.9	331.4	334.4	391.4	60.0	32.0	YES	⚠ **HXT1026S-32FM**
		10xD	289.9	331.4	334.4	391.4	60.0	32.0	NO	⚠ **HXT1026S-32CM**
		12xD	348.0	389.0	391.8	449.0	60.0	32.0	YES	⚠ **HXT1226S-32FM**
		12xD	348.0	389.0	391.8	449.0	60.0	32.0	NO	⚠ **HXT1226S-32CM**

Connection Accessories

Insert Screws	Nylon Locking Screws	Insert Driver	Preset Torque Hand Driver	Replacement Tips	Admissible Tightening Torque*
7495-IP15-1	**7495N-IP15-1**	**8IP-15**	**8IP-15TL**	**8IP-15B**	61.0 in-lbs (690 N-cm)

*Tightening torques are calculated with a friction coefficient of μ = 0.14 and develop 90% of ultimate yield strength.

⚠ WARNING Refer to Speed and Feed charts for recommended adjustments to speeds and feeds. Refer to page A20: 86 for deep hole drilling guidelines in this section of the catalog. Visit **www.alliedmachine.com/DeepHoleGuidelines** for the most up-to-date information and procedures. Factory technical assistance is available for your specific applications through our Application Engineering Team.
ext: **7611** | *email:* **appeng@alliedmachine.com**

i = Imperial (in)
m = Metric (mm)
Screws sold in multiples of 10

GEN3SYS XT Drill Inserts

26 Series | Diameter Range: 1.0236" - 1.1416" (26.00 mm - 28.99 mm)

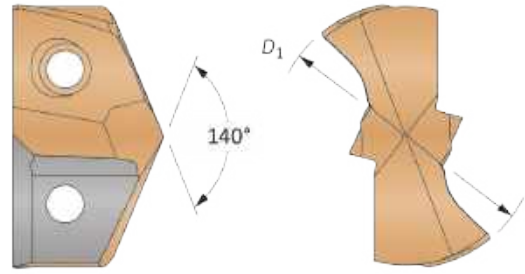

Insert				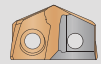	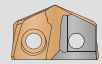	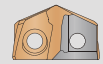	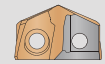
Carbide Substrate	**Fractional Equivalent**	**D_1 inch**	**D_1 mm**	**Standard Part No.**	**Low Rake Part No.**	**Cast Iron Part No.**	**Stainless Part No.**
C1 (K35)		1.0236	26.00	**7C126P-26**	**7C126P-26LR**	–	–
	1-1/32	1.0313	26.20	**7C126P-0101**	**7C126P-0101LR**	–	–
	1-3/64	1.0469	26.59	**7C126P-1.046**	**7C126P-1.046LR**	–	–
	1-1/16	1.0625	26.99	**7C126P-0102**	**7C126P-0102LR**	–	–
		1.0630	27.00	**7C126P-27**	**7C126P-27LR**	–	–
	1-3/32	1.0938	27.78	**7C126P-0103**	**7C126P-0103LR**	–	–
		1.1024	28.00	**7C126P-28**	**7C126P-28LR**	–	–
	1-7/64	1.1094	28.17	**7C126P-1.109**	**7C126P-1.109LR**	–	–
	1-1/8	1.1250	28.58	**7C126P-0104**	**7C126P-0104LR**	–	–
C2 (K20)		1.0236	26.00	**7C226P-26**	**7C226P-26LR**	**7C226P-26CI**	**7C226P-26AS**
	1-1/32	1.0313	26.20	**7C226P-0101**	**7C226P-0101LR**	**7C226P-0101CI**	**7C226P-0101AS**
	1-3/64	1.0469	26.59	**7C226P-1.046**	**7C226P-1.046LR**	**7C226P-1.046CI**	**7C226P-1.046AS**
	1-1/16	1.0625	26.99	**7C226P-0102**	**7C226P-0102LR**	**7C226P-0102CI**	**7C226P-0102AS**
		1.0630	27.00	**7C226P-27**	**7C226P-27LR**	**7C226P-27CI**	**7C226P-27AS**
	1-3/32	1.0938	27.78	**7C226P-0103**	**7C226P-0103LR**	**7C226P-0103CI**	**7C226P-0103AS**
		1.1024	28.00	**7C226P-28**	**7C226P-28LR**	**7C226P-28CI**	**7C226P-28AS**
	1-7/64	1.1094	28.17	**7C226P-1.109**	**7C226P-1.109LR**	**7C226P-1.109CI**	**7C226P-1.109AS**
	1-1/8	1.1250	28.58	**7C226P-0104**	**7C226P-0104LR**	**7C226P-0104CI**	**7C226P-0104AS**

Inserts sold in multiples of 1.

A20: 68 - 83
Key on A20: 1

A20: 6 - 9

Sizes not shown are available upon request. When ordering, please follow the example below:	
Imperial:	0.5200", 13 series, C2 = use Part No. **7C213P-.5200**
Metric:	13.20 mm, 13 series, C2 = use Part No. **7C213P-13.20**

GEN3SYS Drill Insert Holders

26 Series | Diameter Range: 1.0236" - 1.1416" (26.00 mm - 28.99 mm)

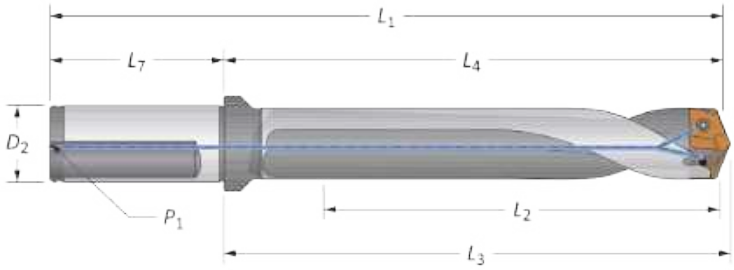

Straight and Helical

	Flute	Length	Body L_2	Body L_4	Body L_3	Body L_1	Shank L_7	Shank D_2	Shank P_1	Flat	Part No.
i	Straight	3xD	3-27/64	5-1/16	5-11/64	7-11/32	2-9/32	1-1/4	1/8	YES	**60326S-125F**
		5xD	5-45/64	7-11/32	7-29/64	9-5/8	2-9/32	1-1/4	1/8	YES	**60526S-125F**
		7xD	7-63/64	9-5/8	9-47/64	11-29/32	2-9/32	1-1/4	1/8	YES	**60726S-125F**
	Helical	Stub	1-1/4	2-7/8	2-63/64	5-5/32	2-9/32	1-1/4	1/8	YES	**60126H-125F**
		3xD	3-27/64	5-1/16	5-11/64	7-11/32	2-9/32	1-1/4	1/8	YES	**60326H-125F**
		3xD	3-27/64	5-1/16	5-11/64	7-11/32	2-9/32	1-1/4	1/8	NO	**60326H-125C**
		5xD	5-45/64	7-11/32	7-29/64	9-5/8	2-9/32	1-1/4	1/8	YES	**60526H-125F**
		5xD	5-45/64	7-11/32	7-29/64	9-5/8	2-9/32	1-1/4	1/8	NO	**60526H-125C**
		7xD	7-63/64	9-5/8	9-47/64	11-29/32	2-9/32	1-1/4	1/8	YES	**60726H-125F**
		7xD	7-63/64	9-5/8	9-47/64	11-29/32	2-9/32	1-1/4	1/8	NO	**60726H-125C**
m	Straight	3xD	87.0	128.6	131.4	188.6	60.0	32.0	1/8*	YES	**60326S-32FM**
		5xD	145.0	186.5	189.4	246.5	60.0	32.0	1/8*	YES	**60526S-32FM**
		7xD	202.9	244.5	247.4	304.5	60.0	32.0	1/8*	YES	**60726S-32FM**
	Helical	Stub	32.0	72.9	75.7	132.9	60.0	32.0	1/8*	YES	**60126H-32FM**
		3xD	87.0	128.6	131.4	188.6	60.0	32.0	1/8*	YES	**60326H-32FM**
		3xD	87.0	128.6	131.4	188.6	60.0	32.0	1/8*	NO	**60326H-32CM**
		5xD	145.0	186.5	189.4	246.5	60.0	32.0	1/8*	YES	**60526H-32FM**
		5xD	145.0	186.5	189.4	246.5	60.0	32.0	1/8*	NO	**60526H-32CM**
		7xD	202.9	244.5	247.4	304.5	60.0	32.0	1/8*	YES	**60726H-32FM**
		7xD	202.9	244.5	247.4	304.5	60.0	32.0	1/8*	NO	**60726H-32CM**

*Thread to BSP and ISO 7-1

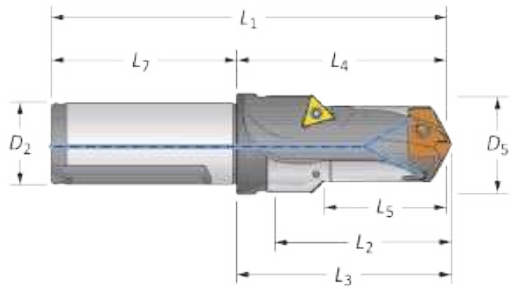

Drill / Chamfer

	Step D_5	Step L_5	Body L_2	Body L_4	Body L_3	Body L_1	Shank L_7	Shank D_2	Part No.	Chamfer Insert
i	1-11/32	1-17/32	2-3/64	2-7/8	2-63/64	5-5/32	2-9/32	1-1/4	**60126C45-125F**	**TCMT-110204**
m	34.0	39.0	52.1	72.9	75.7	132.9	60.0	32.0	**60126C45-32FM**	**TCMT-110204**

Connection Accessories

Insert Screws	Nylon Locking Screws	Insert Driver	Preset Torque Hand Driver	Replacement Tips	Admissible Tightening Torque*
7495-IP15-1	**7495N-IP15-1**	**8IP-15**	**8IP-15TL**	**8IP-15B**	61.0 in-lbs (690 N-cm)

*Tightening torques are calculated with a friction coefficient of μ = 0.14 and develop 90% of ultimate yield strength.

i = Imperial (in)
m = Metric (mm)

Chamfer inserts sold separately in multiples of 10 | Screws sold in multiples of 10

GEN3SYS XT Pro Drill Inserts

29 Series | Diameter Range: 1.1417" - 1.2597" (29.00 mm - 31.99 mm)

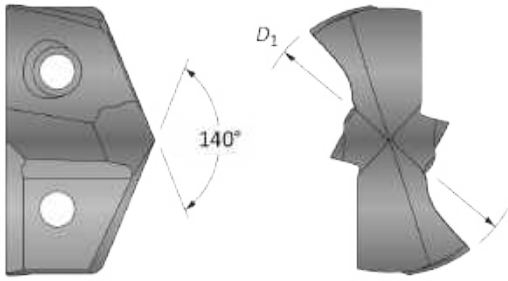

Insert						
Fractional Equivalent	D_1 inch	D_1 mm	Part No. P	Part No. K	Part No. N	Part No. M
–	1.1417	29.00	XTP29-29.00	XTK29-29.00	XTN29-29.00	XTM29-29.00
–	1.1457	29.10	XTP29-29.10	XTK29-29.10	XTN29-29.10	XTM29-29.10
–	1.1496	29.20	XTP29-29.20	XTK29-29.20	XTN29-29.20	XTM29-29.20
–	1.1535	29.30	XTP29-29.30	XTK29-29.30	XTN29-29.30	XTM29-29.30
1-5/32	1.1563	29.37	XTP29-29.37	XTK29-29.37	XTN29-29.37	XTM29-29.37
–	1.1575	29.40	XTP29-29.40	XTK29-29.40	XTN29-29.40	XTM29-29.40
–	1.1614	29.50	XTP29-29.50	XTK29-29.50	XTN29-29.50	XTM29-29.50
–	1.1654	29.60	XTP29-29.60	XTK29-29.60	XTN29-29.60	XTM29-29.60
–	1.1693	29.70	XTP29-29.70	XTK29-29.70	XTN29-29.70	XTM29-29.70
–	1.1732	29.80	XTP29-29.80	XTK29-29.80	XTN29-29.80	XTM29-29.80
–	1.1772	29.90	XTP29-29.90	XTK29-29.90	XTN29-29.90	XTM29-29.90
–	1.1811	30.00	XTP29-30.00	XTK29-30.00	XTN29-30.00	XTM29-30.00
–	1.1850	30.10	XTP29-30.10	XTK29-30.10	XTN29-30.10	XTM29-30.10
1-3/16	1.1874	30.16	XTP29-30.16	XTK29-30.16	XTN29-30.16	XTM29-30.16
–	1.1890	30.20	XTP29-30.20	XTK29-30.20	XTN29-30.20	XTM29-30.20
–	1.1929	30.30	XTP29-30.30	XTK29-30.30	XTN29-30.30	XTM29-30.30
–	1.1969	30.40	XTP29-30.40	XTK29-30.40	XTN29-30.40	XTM29-30.40
–	1.2008	30.50	XTP29-30.50	XTK29-30.50	XTN29-30.50	XTM29-30.50
–	1.2047	30.60	XTP29-30.60	XTK29-30.60	XTN29-30.60	XTM29-30.60
–	1.2087	30.70	XTP29-30.70	XTK29-30.70	XTN29-30.70	XTM29-30.70
–	1.2126	30.80	XTP29-30.80	XTK29-30.80	XTN29-30.80	XTM29-30.80
–	1.2165	30.90	XTP29-30.90	XTK29-30.90	XTN29-30.90	XTM29-30.90
1-7/32	1.2189	30.96	XTP29-30.96	XTK29-30.96	XTN29-30.96	XTM29-30.96
–	1.2205	31.00	XTP29-31.00	XTK29-31.00	XTN29-31.00	XTM29-31.00
–	1.2244	31.10	XTP29-31.10	XTK29-31.10	XTN29-31.10	XTM29-31.10
–	1.2283	31.20	XTP29-31.20	XTK29-31.20	XTN29-31.20	XTM29-31.20
–	1.2323	31.30	XTP29-31.30	XTK29-31.30	XTN29-31.30	XTM29-31.30
–	1.2362	31.40	XTP29-31.40	XTK29-31.40	XTN29-31.40	XTM29-31.40
–	1.2402	31.50	XTP29-31.50	XTK29-31.50	XTN29-31.50	XTM29-31.50
–	1.2441	31.60	XTP29-31.60	XTK29-31.60	XTN29-31.60	XTM29-31.60
–	1.2480	31.70	XTP29-31.70	XTK29-31.70	XTN29-31.70	XTM29-31.70
1-1/4	1.2500	31.75	XTP29-31.75	XTK29-31.75	XTN29-31.75	XTM29-31.75
–	1.2520	31.80	XTP29-31.80	XTK29-31.80	XTN29-31.80	XTM29-31.80
–	1.2559	31.90	XTP29-31.90	XTK29-31.90	XTN29-31.90	XTM29-31.90

Inserts sold in multiples of 1.

A20: 68 - 83
Key on A20: 1

A20: 6 - 9

Sizes not shown are available upon request. When ordering, please follow the example below:	
Imperial:	0.5180", Steel, 13 series = use Part No. **XTP13-13.16**
Metric:	13.16 mm, Steel, 13 series = use Part No. **XTP13-13.16**

GEN3SYS XT Pro Drill Insert Holders

29 Series | Diameter Range: 1.1417" - 1.2597" (29.00 mm - 31.99 mm)

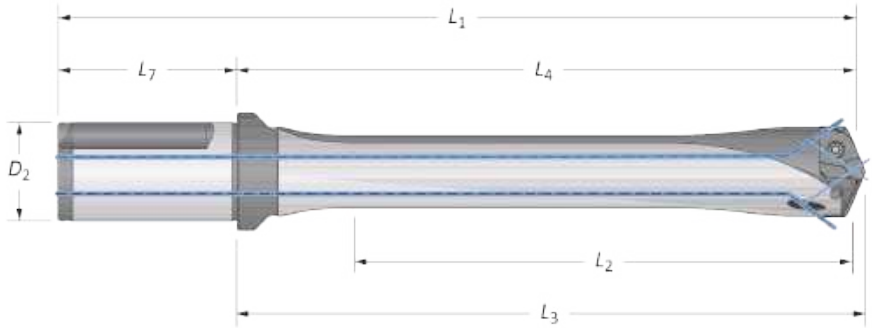

	Flute	Length	Body L_2	Body L_4	Body L_3	Body L_1	Shank L_7	Shank D_2	Shank Flat	Part No.
i	Straight	3xD	3-25/32	5-3/8	5-1/2	7-21/32	2-9/32	1-1/4	YES	**HXT0329S-125F**
		3xD	3-25/32	5-3/8	5-1/2	7-21/32	2-9/32	1-1/4	NO	**HXT0329S-125C**
		5xD	6-19/64	7-29/32	8-1/64	10-3/16	2-9/32	1-1/4	YES	**HXT0529S-125F**
		5xD	6-19/64	7-29/32	8-1/64	10-3/16	2-9/32	1-1/4	NO	**HXT0529S-125C**
		7xD	8-13/16	10-27/64	10-17/64	12-45/64	2-9/32	1-1/4	YES	**HXT0729S-125F**
		7xD	8-13/16	10-27/64	10-17/64	12-45/64	2-9/32	1-1/4	NO	**HXT0729S-125C**
		10xD	12-19/32	14-3/16	14-5/16	16-15/32	2-9/32	1-1/4	YES	⚠ **HXT1029S-125F**
		10xD	12-19/32	14-3/16	14-5/16	16-15/32	2-9/32	1-1/4	NO	⚠ **HXT1029S-125C**
m	Straight	3xD	96.0	136.5	139.7	196.5	60.0	32.0	YES	**HXT0329S-32FM**
		3xD	96.0	136.5	139.7	196.5	60.0	32.0	NO	**HXT0329S-32CM**
		5xD	160.0	200.8	203.7	260.8	60.0	32.0	YES	**HXT0529S-32FM**
		5xD	160.0	200.8	203.7	260.8	60.0	32.0	NO	**HXT0529S-32CM**
		7xD	223.9	264.7	267.6	324.7	60.0	32.0	YES	**HXT0729S-32FM**
		7xD	223.9	264.7	267.6	324.7	60.0	32.0	NO	**HXT0729S-32CM**
		10xD	319.9	360.4	363.6	420.4	60.0	32.0	YES	⚠ **HXT1029S-32FM**
		10xD	319.9	360.4	363.6	420.4	60.0	32.0	NO	⚠ **HXT1029S-32CM**

Connection Accessories

Insert Screws	Nylon Locking Screws	Insert Driver	Preset Torque Hand Driver	Replacement Tips	Admissible Tightening Torque*
7495-IP15-1	**7495N-IP15-1**	**8IP-15**	**8IP-15TL**	**8IP-15B**	61.0 in-lbs (690 N-cm)

*Tightening torques are calculated with a friction coefficient of μ = 0.14 and develop 90% of ultimate yield strength.

⚠ **WARNING** Refer to Speed and Feed charts for recommended adjustments to speeds and feeds. Refer to page A20: 86 for deep hole drilling guidelines in this section of the catalog. Visit **www.alliedmachine.com/DeepHoleGuidelines** for the most up-to-date information and procedures. Factory technical assistance is available for your specific applications through our Application Engineering Team.
ext: **7611** | *email:* **appeng@alliedmachine.com**

i = Imperial (in)
m = Metric (mm)
Screws sold in multiples of 10

GEN3SYS XT Drill Inserts

29 Series | Diameter Range: 1.1417" - 1.2597" (29.00 mm - 31.99 mm)

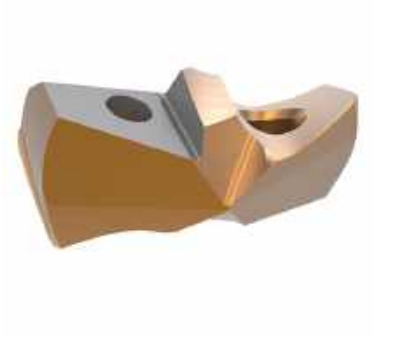

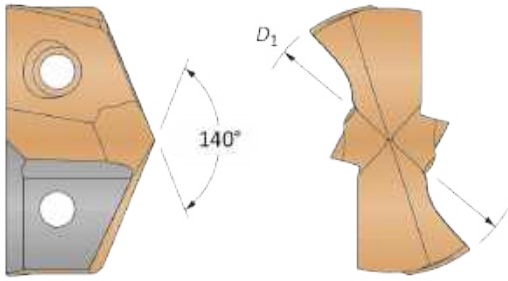

Insert							
Carbide Substrate	**Fractional Equivalent**	**D_1 inch**	**D_1 mm**	**Standard Part No.**	**Low Rake Part No.**	**Cast Iron Part No.**	**Stainless Part No.**
C1 (K35)	–	1.1417	29.00	**7C129P-29**	**7C129P-29LR**	–	–
	1-5/32	1.1563	29.37	**7C129P-0105**	**7C129P-0105LR**	–	–
	–	1.1811	30.00	**7C129P-30**	**7C129P-30LR**	–	–
	1-3/16	1.1875	30.16	**7C129P-0106**	**7C129P-0106LR**	–	–
	–	1.2008	30.50	**7C129P-30.5**	**7C129P-30.5LR**	–	–
	1-7/32	1.2188	30.96	**7C129P-0107**	**7C129P-0107LR**	–	–
	–	1.2205	31.00	**7C129P-31**	**7C129P-31LR**	–	–
	1-1/4	1.2500	31.75	**7C129P-0108**	**7C129P-0108LR**	–	–
C2 (K20)	–	1.1417	29.00	**7C229P-29**	**7C229P-29LR**	**7C229P-29CI**	**7C229P-29AS**
	1-5/32	1.1563	29.37	**7C229P-0105**	**7C229P-0105LR**	**7C229P-0105CI**	**7C229P-0105AS**
	–	1.1811	30.00	**7C229P-30**	**7C229P-30LR**	**7C229P-30CI**	**7C229P-30AS**
	1-3/16	1.1875	30.16	**7C229P-0106**	**7C229P-0106LR**	**7C229P-0106CI**	**7C229P-0106AS**
	–	1.2008	30.50	**7C229P-30.5**	**7C229P-30.5LR**	**7C229P-30.5CI**	**7C229P-30.5AS**
	1-7/32	1.2188	30.96	**7C229P-0107**	**7C229P-0107LR**	**7C229P-0107CI**	**7C229P-0107AS**
	–	1.2205	31.00	**7C229P-31**	**7C229P-31LR**	**7C229P-31CI**	**7C229P-31AS**
	1-1/4	1.2500	31.75	**7C229P-0108**	**7C229P-0108LR**	**7C229P-0108CI**	**7C229P-0108AS**

Inserts sold in multiples of 1.

A20: 68 - 83
Key on A20: 1

A20: 6 - 9

Sizes not shown are available upon request. When ordering, please follow the example below:	
Imperial:	0.5200", 13 series, C2 = use Part No. **7C213P-.5200**
Metric:	13.20 mm, 13 series, C2 = use Part No. **7C213P-13.20**

GEN3SYS Drill Insert Holders

29 Series | Diameter Range: 1.1417" - 1.2597" (29.00 mm - 31.99 mm)

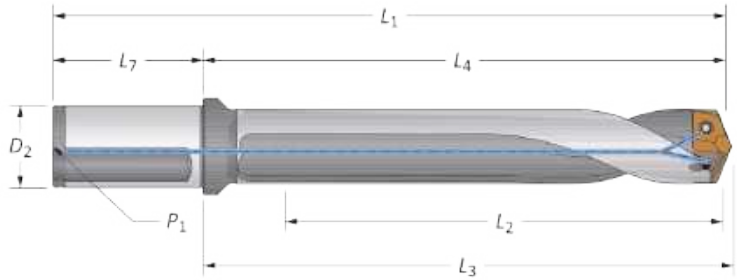

Straight and Helical

	Flute	Length	Body L_2	Body L_4	Body L_3	Body L_1	Shank L_7	Shank D_2	Shank P_1	Shank Flat	Part No.
i	Straight	3xD	3-25/32	5-3/8	5-1/2	7-21/32	2-9/32	1-1/4	1/4	YES	**60329S-125F**
		5xD	6-19/64	7-29/32	8-1/64	10-3/16	2-9/32	1-1/4	1/4	YES	**60529S-125F**
		7xD	8-13/16	10-27/64	10-17/64	12-45/64	2-9/32	1-1/4	1/4	YES	**60729S-125F**
	Helical	Stub	1-3/8	2-31/32	3-5/64	5-1/4	2-9/32	1-1/4	1/4	YES	**60129H-125F**
		3xD	3-25/32	5-3/8	5-1/2	7-21/32	2-9/32	1-1/4	1/4	YES	**60329H-125F**
		3xD	3-25/32	5-3/8	5-1/2	7-21/32	2-9/32	1-1/4	1/4	NO	**60329H-125C**
		5xD	6-19/64	7-29/32	8-1/64	10-3/16	2-9/32	1-1/4	1/4	YES	**60529H-125F**
		5xD	6-19/64	7-29/32	8-1/64	10-3/16	2-9/32	1-1/4	1/4	NO	**60529H-125C**
		7xD	8-13/16	10-27/64	10-17/64	12-45/64	2-9/32	1-1/4	1/4	YES	**60729H-125F**
		7xD	8-13/16	10-27/64	10-17/64	12-45/64	2-9/32	1-1/4	1/4	NO	**60729H-125C**
m	Straight	3xD	96.0	136.5	139.7	196.5	60.0	32.0	1/4*	YES	**60329S-32FM**
		5xD	160.0	200.8	203.7	260.8	60.0	32.0	1/4*	YES	**60529S-32FM**
		7xD	223.9	264.7	267.6	324.7	60.0	32.0	1/4*	YES	**60729S-32FM**
	Helical	Stub	35.0	75.2	78.2	135.2	60.0	32.0	1/4*	YES	**60129H-32FM**
		3xD	96.0	136.5	139.7	196.5	60.0	32.0	1/4*	YES	**60329H-32FM**
		3xD	96.0	136.5	139.7	196.5	60.0	32.0	1/4*	NO	**60329H-32CM**
		5xD	160.0	200.8	203.7	260.8	60.0	32.0	1/4*	YES	**60529H-32FM**
		5xD	160.0	200.8	203.7	260.8	60.0	32.0	1/4*	NO	**60529H-32CM**
		7xD	223.9	264.7	267.6	324.7	60.0	32.0	1/4*	YES	**60729H-32FM**
		7xD	223.9	264.7	267.6	324.7	60.0	32.0	1/4*	NO	**60729H-32CM**

*Thread to BSP and ISO 7-1

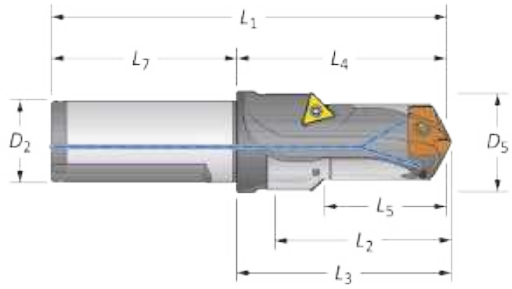

Drill / Chamfer

	Step D_5	Step L_5	Body L_2	Body L_4	Body L_3	Body L_1	Shank L_7	Shank D_2	Part No.	Chamfer Insert
i	1-29/64	1-23/32	2-13/64	2-31/32	3-5/64	5-1/4	2-9/32	1-1/4	**60129C45-125F**	**TCMT-16T304**
m	37.1	43.5	55.9	75.2	78.2	135.2	60.0	32.0	**60129C45-32FM**	**TCMT-16T304**

Connection Accessories

Insert Screws	Nylon Locking Screws	Insert Driver	Preset Torque Hand Driver	Replacement Tips	Admissible Tightening Torque*
7495-IP15-1	**7495N-IP15-1**	**8IP-15**	**8IP-15TL**	**8IP-15B**	61.0 in-lbs (690 N-cm)

*Tightening torques are calculated with a friction coefficient of μ = 0.14 and develop 90% of ultimate yield strength.

i = Imperial (in)
m = Metric (mm)

Chamfer inserts sold separately in multiples of 10 | Screws sold in multiples of 10

GEN3SYS XT Pro Drill Inserts

32 Series | Diameter Range: 1.2598" - 1.3780" (32.00 mm - 35.00 mm)

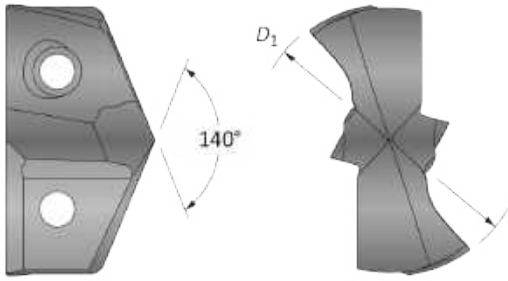

Insert						
Fractional Equivalent	D_1 inch	D_1 mm	Part No. P	Part No. K	Part No. N	Part No. M
–	1.2598	32.00	XTP32-32.00	XTK32-32.00	XTN32-32.00	XTM32-32.00
–	1.2638	32.10	XTP32-32.10	XTK32-32.10	XTN32-32.10	XTM32-32.10
1-17/64	1.2657	32.15	XTP32-32.15	XTK32-32.15	XTN32-32.15	XTM32-32.15
–	1.2677	32.20	XTP32-32.20	XTK32-32.20	XTN32-32.20	XTM32-32.20
–	1.2717	32.30	XTP32-32.30	XTK32-32.30	XTN32-32.30	XTM32-32.30
–	1.2756	32.40	XTP32-32.40	XTK32-32.40	XTN32-32.40	XTM32-32.40
–	1.2795	32.50	XTP32-32.50	XTK32-32.50	XTN32-32.50	XTM32-32.50
1-9/32	1.2815	32.55	XTP32-32.55	XTK32-32.55	XTN32-32.55	XTM32-32.55
–	1.2835	32.60	XTP32-32.60	XTK32-32.60	XTN32-32.60	XTM32-32.60
–	1.2874	32.70	XTP32-32.70	XTK32-32.70	XTN32-32.70	XTM32-32.70
–	1.2913	32.80	XTP32-32.80	XTK32-32.80	XTN32-32.80	XTM32-32.80
–	1.2953	32.90	XTP32-32.90	XTK32-32.90	XTN32-32.90	XTM32-32.90
–	1.2992	33.00	XTP32-33.00	XTK32-33.00	XTN32-33.00	XTM32-33.00
–	1.3031	33.10	XTP32-33.10	XTK32-33.10	XTN32-33.10	XTM32-33.10
–	1.3071	33.20	XTP32-33.20	XTK32-33.20	XTN32-33.20	XTM32-33.20
–	1.3110	33.30	XTP32-33.30	XTK32-33.30	XTN32-33.30	XTM32-33.30
1-5/16	1.3126	33.34	XTP32-33.34	XTK32-33.34	XTN32-33.34	XTM32-33.34
–	1.3150	33.40	XTP32-33.40	XTK32-33.40	XTN32-33.40	XTM32-33.40
–	1.3189	33.50	XTP32-33.50	XTK32-33.50	XTN32-33.50	XTM32-33.50
–	1.3228	33.60	XTP32-33.60	XTK32-33.60	XTN32-33.60	XTM32-33.60
–	1.3268	33.70	XTP32-33.70	XTK32-33.70	XTN32-33.70	XTM32-33.70
–	1.3307	33.80	XTP32-33.80	XTK32-33.80	XTN32-33.80	XTM32-33.80
–	1.3346	33.90	XTP32-33.90	XTK32-33.90	XTN32-33.90	XTM32-33.90
–	1.3386	34.00	XTP32-34.00	XTK32-34.00	XTN32-34.00	XTM32-34.00
–	1.3425	34.10	XTP32-34.10	XTK32-34.10	XTN32-34.10	XTM32-34.10
1-11/32	1.3437	34.13	XTP32-34.13	XTK32-34.13	XTN32-34.13	XTM32-34.13
–	1.3465	34.20	XTP32-34.20	XTK32-34.20	XTN32-34.20	XTM32-34.20
–	1.3504	34.30	XTP32-34.30	XTK32-34.30	XTN32-34.30	XTM32-34.30
–	1.3543	34.40	XTP32-34.40	XTK32-34.40	XTN32-34.40	XTM32-34.40
–	1.3583	34.50	XTP32-34.50	XTK32-34.50	XTN32-34.50	XTM32-34.50
–	1.3622	34.60	XTP32-34.60	XTK32-34.60	XTN32-34.60	XTM32-34.60
–	1.3661	34.70	XTP32-34.70	XTK32-34.70	XTN32-34.70	XTM32-34.70
–	1.3701	34.80	XTP32-34.80	XTK32-34.80	XTN32-34.80	XTM32-34.80
–	1.3740	34.90	XTP32-34.90	XTK32-34.90	XTN32-34.90	XTM32-34.90
1-3/8	1.3752	34.93	XTP32-34.93	XTK32-34.93	XTN32-34.93	XTM32-34.93
–	1.3780	35.00	XTP32-35.00	XTK32-35.00	XTN32-35.00	XTM32-35.00

Inserts sold in multiples of 1.

A20: 68 - 83
Key on A20: 1

A20: 6 - 9

Sizes not shown are available upon request. When ordering, please follow the example below:	
Imperial:	0.5180", Steel, 13 series = use Part No. **XTP13-13.16**
Metric:	13.16 mm, Steel, 13 series = use Part No. **XTP13-13.16**

GEN3SYS XT Pro Drill Insert Holders

32 Series | Diameter Range: 1.2598" - 1.3780" (32.00 mm - 35.00 mm)

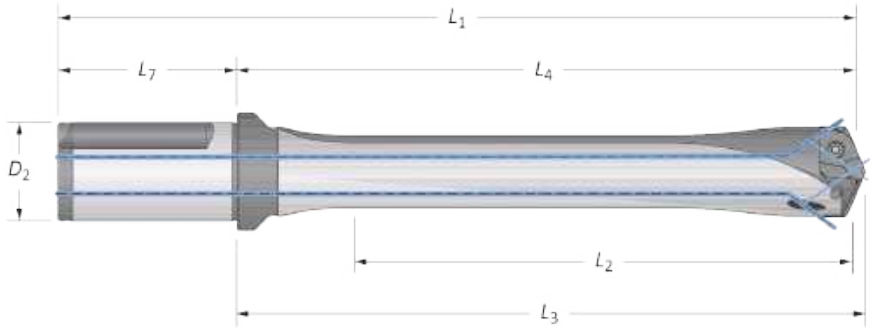

	Flute	Length	Body L_2	Body L_4	Body L_3	Body L_1	Shank L_7	Shank D_2	Shank Flat	Part No.
i	Straight	3xD	4-9/64	6-7/32	6-23/64	8-29/32	2-11/16	1-1/2	YES	**HXT0332S-150F**
		3xD	4-9/64	6-7/32	6-23/64	8-29/32	2-11/16	1-1/2	NO	**HXT0332S-150C**
		5xD	6-57/64	8-31/32	9-7/64	11-21/32	2-11/16	1-1/2	YES	**HXT0532S-150F**
		5xD	6-57/64	8-31/32	9-7/64	11-21/32	2-11/16	1-1/2	NO	**HXT0532S-150C**
		7xD	9-41/64	11-23/32	11-55/64	14-13/32	2-11/16	1-1/2	YES	**HXT0732S-150F**
		7xD	9-41/64	11-23/32	11-55/64	14-13/32	2-11/16	1-1/2	NO	**HXT0732S-150C**
		10xD	13-25/32	15-55/64	16	18-35/64	2-11/16	1-1/2	YES	⚠ **HXT1032S-150F**
		10xD	13-25/32	15-55/64	16	18-35/64	2-11/16	1-1/2	NO	⚠ **HXT1032S-150C**
m	Straight	3xD	105.0	157.9	161.5	217.9	60.0	32.0	YES	**HXT0332S-32FM**
		3xD	105.0	157.9	161.5	217.9	60.0	32.0	NO	**HXT0332S-32CM**
		5xD	175.0	227.8	231.3	287.8	60.0	32.0	YES	**HXT0532S-32FM**
		5xD	175.0	227.8	231.3	287.8	60.0	32.0	NO	**HXT0532S-32CM**
		7xD	245.0	297.6	301.2	357.6	60.0	32.0	YES	**HXT0732S-32FM**
		7xD	245.0	297.6	301.2	357.6	60.0	32.0	NO	**HXT0732S-32CM**
		10xD	350.0	402.8	406.4	459.3	60.0	32.0	YES	⚠ **HXT1032S-32FM**
		10xD	350.0	402.8	406.4	459.3	60.0	32.0	NO	⚠ **HXT1032S-32CM**

Connection Accessories

Insert Screws	Nylon Locking Screws	Insert Driver	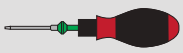 Preset Torque Hand Driver	Replacement Tips	Admissible Tightening Torque*
7495-IP15-1	**7495N-IP15-1**	**8IP-15**	**8IP-15TL**	**8IP-15B**	61.0 in-lbs (690 N-cm)

*Tightening torques are calculated with a friction coefficient of μ = 0.14 and develop 90% of ultimate yield strength.

⚠ **WARNING** Refer to Speed and Feed charts for recommended adjustments to speeds and feeds. Refer to page A20: 86 for deep hole drilling guidelines in this section of the catalog. Visit **www.alliedmachine.com/DeepHoleGuidelines** for the most up-to-date information and procedures. Factory technical assistance is available for your specific applications through our Application Engineering Team.
ext: **7611** | *email:* **appeng@alliedmachine.com**

i = Imperial (in)
m = Metric (mm)
Screws sold in multiples of 10

GEN3SYS XT Drill Inserts

32 Series | Diameter Range: 1.2598" - 1.3780" (32.00 mm - 35.00 mm)

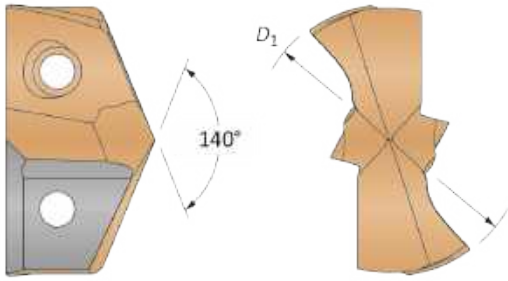

Insert							
Carbide Substrate	Fractional Equivalent	D_1 inch	D_1 mm	Standard Part No.	Low Rake Part No.	Cast Iron Part No.	Stainless Part No.
C1 (K35)	–	1.2598	32.00	**7C132P-32**	**7C132P-32LR**	–	–
	1-17/64	1.2658	32.15	**7C132P-32.15**	**7C132P-32.15LR**	–	–
	–	1.2795	32.50	**7C132P-32.5**	**7C132P-32.5LR**	–	–
	1-9/32	1.2813	32.55	**7C132P-0109**	**7C132P-0109LR**	–	–
	–	1.2992	33.00	**7C132P-33**	**7C132P-33LR**	–	–
	1-5/16	1.3125	33.34	**7C132P-0110**	**7C132P-0110LR**	–	–
	–	1.3189	33.50	**7C132P-33.5**	**7C132P-33.5LR**	–	–
	–	1.3386	34.00	**7C132P-34**	**7C132P-34LR**	–	–
	1-11/32	1.3438	34.13	**7C132P-0111**	**7C132P-0111LR**	–	–
	–	1.3583	34.50	**7C132P-34.5**	**7C132P-34.5LR**	–	–
	1-3/8	1.3750	34.93	**7C132P-0112**	**7C132P-0112LR**	–	–
	–	1.3780	35.00	**7C132P-35**	**7C132P-35LR**	–	–
C2 (K20)	–	1.2598	32.00	**7C232P-32**	**7C232P-32LR**	**7C232P-32CI**	**7C232P-32AS**
	1-17/64	1.2658	32.15	**7C232P-32.15**	**7C232P-32.15LR**	**7C232P-32.15CI**	**7C232P-32.15AS**
	–	1.2795	32.50	**7C232P-32.5**	**7C232P-32.5LR**	**7C232P-32.5CI**	**7C232P-32.5AS**
	1-9/32	1.2813	32.55	**7C232P-0109**	**7C232P-0109LR**	**7C232P-0109CI**	**7C232P-0109AS**
	–	1.2992	33.00	**7C232P-33**	**7C232P-33LR**	**7C232P-33CI**	**7C232P-33AS**
	1-5/16	1.3125	33.34	**7C232P-0110**	**7C232P-0110LR**	**7C232P-0110CI**	**7C232P-0110AS**
	–	1.3189	33.50	**7C232P-33.5**	**7C232P-33.5LR**	**7C232P-33.5CI**	**7C232P-33.5AS**
	–	1.3386	34.00	**7C232P-34**	**7C232P-34LR**	**7C232P-34CI**	**7C232P-34AS**
	1-11/32	1.3438	34.13	**7C232P-0111**	**7C232P-0111LR**	**7C232P-0111CI**	**7C232P-0111AS**
	–	1.3583	34.50	**7C232P-34.5**	**7C232P-34.5LR**	**7C232P-34.5CI**	**7C232P-34.5AS**
	1-3/8	1.3750	34.93	**7C232P-0112**	**7C232P-0112LR**	**7C232P-0112CI**	**7C232P-0112AS**
	–	1.3780	35.00	**7C232P-35**	**7C232P-35LR**	**7C232P-35CI**	**7C232P-35AS**

Inserts sold in multiples of 1.

A20: 68 - 83
Key on A20: 1

A20: 6 - 9

Sizes not shown are available upon request. When ordering, please follow the example below:	
Imperial:	0.5200", 13 series, C2 = use Part No. **7C213P-.5200**
Metric:	13.20 mm, 13 series, C2 = use Part No. **7C213P-13.20**

GEN3SYS Drill Insert Holders

32 Series | Diameter Range: 1.2598" - 1.3780" (32.00 mm - 35.00 mm)

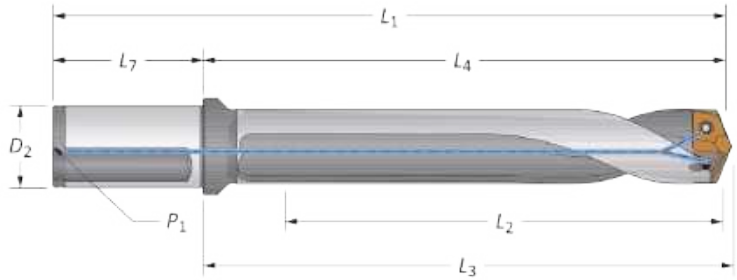

Straight and Helical

	Flute	Length	Body L_2	Body L_4	Body L_3	Body L_1	Shank L_7	Shank D_2	Shank P_1	Shank Flat	Part No.
i	Straight	3xD	4-9/64	6-7/32	6-23/64	8-29/32	2-11/16	1-1/2	1/4	YES	**60332S-150F**
		5xD	6-57/64	8-31/32	9-7/64	11-21/32	2-11/16	1-1/2	1/4	YES	**60532S-150F**
		7xD	9-41/64	11-23/32	11-55/64	14-13/32	2-11/16	1-1/2	1/4	YES	**60732S-150F**
	Helical	Stub	1-1/2	3-37/64	3-45/64	6-1/4	2-11/16	1-1/2	1/4	YES	**60132H-150F**
		3xD	4-9/64	6-7/32	6-23/64	8-29/32	2-11/16	1-1/2	1/4	YES	**60332H-150F**
		3xD	4-9/64	6-7/32	6-23/64	8-29/32	2-11/16	1-1/2	1/4	NO	**60332H-150C**
		5xD	6-57/64	8-31/32	9-7/64	11-21/32	2-11/16	1-1/2	1/4	YES	**60532H-150F**
		5xD	6-57/64	8-31/32	9-7/64	11-21/32	2-11/16	1-1/2	1/4	NO	**60532H-150C**
		7xD	9-41/64	11-23/32	11-55/64	14-13/32	2-11/16	1-1/2	1/4	YES	**60732H-150F**
		7xD	9-41/64	11-23/32	11-55/64	14-13/32	2-11/16	1-1/2	1/4	NO	**60732H-150C**
m	Straight	3xD	105.0	150.7	154.3	220.7	70.0	40.0	1/4*	YES	**60332S-40FM**
		5xD	175.0	220.7	224.3	290.7	70.0	40.0	1/4*	YES	**60532S-40FM**
		7xD	245.0	290.7	294.3	360.7	70.0	40.0	1/4*	YES	**60732S-40FM**
	Helical	Stub	38.0	90.7	94.2	160.7	70.0	40.0	1/4*	YES	**60132H-40FM**
		3xD	105.0	150.7	154.3	220.7	70.0	40.0	1/4*	YES	**60332H-40FM**
		3xD	105.0	150.7	154.3	220.7	70.0	40.0	1/4*	NO	**60332H-40CM**
		5xD	175.0	220.7	224.3	290.7	70.0	40.0	1/4*	YES	**60532H-40FM**
		5xD	175.0	220.7	224.3	290.7	70.0	40.0	1/4*	NO	**60532H-40CM**
		7xD	245.0	290.7	294.3	360.7	70.0	40.0	1/4*	YES	**60732H-40FM**
		7xD	245.0	290.7	294.3	360.7	70.0	40.0	1/4*	NO	**60732H-40CM**

*Thread to BSP and ISO 7-1

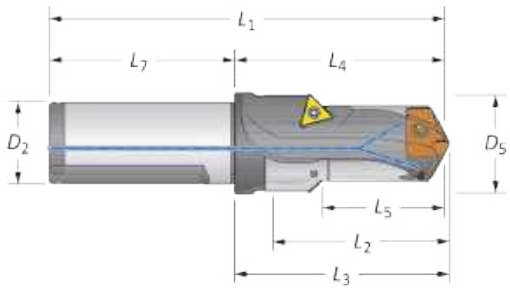

Drill / Chamfer

	Step D_5	Step L_5	Body L_2	Body L_4	Body L_3	Body L_1	Shank L_7	Shank D_2	Part No.	Chamfer Insert
i	1-37/64	1-57/64	2-29/64	3-37/64	3-23/32	6-1/4	2-11/16	1-1/2	**60132C45-150F**	**TCMT-16T304**
m	40.1	48.0	62.4	90.7	94.2	160.7	70.0	40.0	**60132C45-40FM**	**TCMT-16T304**

Connection Accessories

Insert Screws	Nylon Locking Screws	Insert Driver	Preset Torque Hand Driver	Replacement Tips	Admissible Tightening Torque*
7495-IP15-1	**7495N-IP15-1**	**8IP-15**	**8IP-15TL**	**8IP-15B**	61.0 in-lbs (690 N-cm)

*Tightening torques are calculated with a friction coefficient of μ = 0.14 and develop 90% of ultimate yield strength.

i = Imperial (in)
m = Metric (mm)

Chamfer inserts sold separately in multiples of 10 | Screws sold in multiples of 10

Recommended Drilling Data | Imperial (inch)

GEN3SYS XT Pro

ISO	Material	Hardness (BHN)	Speed (SFM)	Feed Rate (IPR) by Diameter: 11 series 0.4331" - 0.4723"	12 series 0.4724" - 0.5117"	13 series 0.5118" - 0.5511"	14 series 0.5512" - 0.5905"
P	**Free-Machining Steel**	100 - 150	550	0.011	0.012	0.013	0.014
	1118, 1215, 12L14, etc.	150 - 200	475	0.010	0.011	0.012	0.013
		200 - 250	425	0.008	0.009	0.010	0.011
	Low-Carbon Steel	85 - 125	520	0.011	0.012	0.013	0.014
	1010, 1020, 1025, 1522, 1144, etc.	125 - 175	450	0.010	0.011	0.012	0.013
		175 - 225	410	0.009	0.010	0.011	0.012
		225 - 275	350	0.007	0.008	0.009	0.010
	Medium-Carbon Steel	125 - 175	450	0.010	0.011	0.012	0.013
	1030, 1040, 1050, 1527, 1140, 1151, etc.	175 - 225	410	0.009	0.010	0.011	0.012
		225 - 275	350	0.008	0.009	0.010	0.011
		275 - 325	300	0.007	0.008	0.009	0.010
	Alloy Steel	125 - 175	415	0.010	0.011	0.012	0.013
	4140, 5140, 8640, etc.	175 - 225	380	0.009	0.010	0.011	0.012
		225 - 275	340	0.008	0.009	0.010	0.011
		275 - 325	310	0.006	0.007	0.008	0.009
		325 - 375	280	0.006	0.006	0.007	0.008
	High-Strength Alloy	225 - 300	250	0.008	0.009	0.010	0.011
	4340, 4330V, 300M, etc.	300 - 350	225	0.006	0.007	0.008	0.009
		350 - 400	200	0.005	0.006	0.007	0.008
	Structural Steel	100 - 150	410	0.010	0.011	0.012	0.013
	A36, A285, A516, etc.	150 - 250	330	0.008	0.009	0.010	0.011
		250 - 350	305	0.007	0.008	0.009	0.010
	Tool Steel	150 - 200	265	0.006	0.007	0.007	0.008
	H-13, H-21, A-4, 0-2, S-3, etc.	200 - 250	205	0.005	0.006	0.006	0.007
S	**High-Temp Alloy**	140 - 220	130	0.006	0.007	0.007	0.008
	Hastelloy B, Inconel 600, etc.	220 - 310	100	0.005	0.006	0.006	0.007
	Titanium Alloy	140 - 220	140	0.005	0.006	0.007	0.008
		220 - 310	110	0.004	0.005	0.006	0.007
	Aerospace Alloy	185 - 275	165	0.004	0.004	0.005	0.005
	S82	275 - 350	135	0.003	0.003	0.004	0.005
M	**Stainless Steel 400 Series**	185 - 275	240	0.006	0.007	0.007	0.008
	416, 420, etc.	275 - 350	180	0.005	0.006	0.006	0.007
	Stainless Steel 300 Series	135 - 185	220	0.004	0.005	0.005	0.006
	304, 316, 17-4PH, etc.	185 - 275	160	0.003	0.004	0.004	0.005
	Super Duplex Stainless Steel	135 - 185	125	0.003	0.003	0.003	0.004
		185 - 275	100	0.002	0.002	0.003	0.003

7xD Adjustment Example (0.80 Adjustment)

Data • Adjustment Value	Speed/Feed (7xD)
200 SFM • 0.80	= 160 SFM
0.008 IPR • 0.80	= 0.0064 IPR

10xD and 12xD Adjustment Example (0.70 Adjustment)

Speed • Adjustment Value	Speed/Feed (10xD/12xD)
200 SFM • 0.70	= 140 SFM
0.008 IPR • 0.70	= 0.0056 IPR

⚠ WARNING **Tool failure can cause serious injury. To prevent:**

- When using holders without support bushing, use a short GEN3SYS holder to establish an initial hole that is a minimum of 2 diameters deep.
- Do not rotate tool holders more than 50 RPM unless it is engaged with the workpiece or fixture.

Visit **www.alliedmachine.com/DeepHoleGuidelines** for the most up-to-date information and procedures. Factory technical assistance is available for your specific applications through our Application Engineering Team. *ext:* **7611** | *email:* **appeng@alliedmachine.com**

IMPORTANT: The speeds and feeds listed above are a general starting point for all applications. Refer to the coolant recommendation charts for coolant requirements to run at the recommended speeds and feeds. Factory technical assistance is available through our Application Engineering department. For 7xD, 10xD, and 12xD holder lengths, see adjustment examples above.

Feed Rate (IPR) by Diameter									
15 series 0.5906" - 0.6298"	16 series 0.6299" - 0.6692"	17 series 0.6693" - 0.7086"	18 series 0.7087" - 0.7873"	20 series 0.7874" - 0.8660"	22 series 0.8661" - 0.9448"	24 series 0.9449" - 1.0235"	26 series 1.0236" - 1.1416"	29 series 1.1417" - 1.2597"	32 series 1.2598" - 1.3780"
0.015	0.016	0.017	0.019	0.021	0.022	0.023	0.024	0.025	0.026
0.014	0.015	0.016	0.017	0.019	0.020	0.021	0.022	0.023	0.024
0.012	0.013	0.014	0.016	0.018	0.019	0.020	0.021	0.022	0.023
0.015	0.016	0.017	0.019	0.021	0.022	0.023	0.024	0.025	0.026
0.014	0.015	0.016	0.018	0.019	0.020	0.021	0.022	0.023	0.024
0.013	0.014	0.015	0.017	0.018	0.019	0.020	0.021	0.022	0.023
0.011	0.012	0.013	0.015	0.016	0.017	0.018	0.019	0.020	0.021
0.014	0.015	0.016	0.018	0.020	0.021	0.022	0.023	0.024	0.025
0.013	0.014	0.015	0.017	0.019	0.020	0.021	0.022	0.023	0.024
0.012	0.013	0.014	0.016	0.018	0.019	0.020	0.021	0.022	0.023
0.011	0.012	0.013	0.015	0.016	0.017	0.018	0.019	0.020	0.021
0.014	0.015	0.016	0.018	0.020	0.021	0.022	0.023	0.024	0.025
0.013	0.014	0.015	0.017	0.019	0.020	0.021	0.022	0.023	0.024
0.012	0.013	0.014	0.016	0.018	0.019	0.020	0.021	0.022	0.023
0.010	0.011	0.012	0.014	0.015	0.016	0.017	0.018	0.019	0.020
0.009	0.010	0.011	0.013	0.014	0.015	0.016	0.017	0.018	0.019
0.011	0.012	0.013	0.014	0.015	0.016	0.017	0.018	0.019	0.020
0.010	0.011	0.011	0.012	0.013	0.014	0.015	0.016	0.017	0.018
0.009	0.010	0.010	0.011	0.012	0.013	0.014	0.015	0.016	0.017
0.013	0.015	0.015	0.017	0.019	0.021	0.022	0.023	0.024	0.025
0.012	0.013	0.014	0.015	0.017	0.019	0.020	0.021	0.022	0.023
0.011	0.012	0.013	0.014	0.015	0.017	0.019	0.020	0.021	0.022
0.008	0.009	0.009	0.010	0.011	0.012	0.013	0.014	0.015	0.016
0.007	0.008	0.008	0.009	0.010	0.011	0.012	0.013	0.014	0.015
0.008	0.009	0.009	0.010	0.011	0.011	0.012	0.012	0.013	0.014
0.007	0.008	0.008	0.009	0.010	0.010	0.011	0.011	0.012	0.013
0.008	0.009	0.009	0.010	0.011	0.011	0.012	0.012	0.013	0.014
0.007	0.008	0.008	0.009	0.010	0.010	0.011	0.011	0.012	0.012
0.006	0.006	0.007	0.007	0.008	0.008	0.009	0.010	0.011	0.012
0.005	0.006	0.006	0.006	0.007	0.008	0.008	0.009	0.010	0.011
0.008	0.009	0.010	0.011	0.012	0.013	0.014	0.015	0.016	0.017
0.007	0.008	0.009	0.010	0.011	0.012	0.013	0.014	0.015	0.016
0.006	0.007	0.007	0.008	0.008	0.009	0.009	0.010	0.010	0.011
0.005	0.006	0.006	0.007	0.007	0.008	0.008	0.009	0.009	0.010
0.004	0.005	0.005	0.006	0.006	0.007	0.008	0.008	0.008	0.010
0.004	0.004	0.005	0.005	0.006	0.006	0.007	0.007	0.008	0.008

Coolant Recommendations

	Stub, 3xD, 5xD		7xD		10xD, 12xD	
Series	Pressure PSI	Flow Rate GPM	Pressure PSI	Flow Rate GPM	Pressure PSI	Flow Rate GPM
11	450	5	600	8	800	10
12	450	5	600	8	800	10
13	400	6	500	9.5	750	12
14	400	7	500	9.5	750	12
15	380	7	475	11	700	14
16	380	8	475	12	700	15
17	350	8	450	12.5	650	16.5
18	350	9	450	12.5	650	16.5
20	300	10	400	13	600	18
22	300	11	400	14	600	18
24	300	11	400	14	600	18
26	300	12	400	16	600	20
29	300	12	400	16	600	20
32	300	12	400	16	600	20

Recommended Drilling Data | Imperial (inch)

GEN3SYS XT Pro

ISO	Material	Hardness (BHN)	Speed (SFM)	Feed Rate (IPR) by Diameter			
				11 series 0.4331" - 0.4723"	12 series 0.4724" - 0.5117"	13 series 0.5118" - 0.5511"	14 series 0.5512" - 0.5905"
H	**Wear Plate** Hardox®, AR400, T-1, etc.	400	160	0.005	0.005	0.006	0.006
		500	130	0.004	0.004	0.005	0.006
		600	90	0.004	0.004	0.004	0.005
	Hardened Steel	300 - 400	170	0.005	0.005	0.006	0.006
		400 - 500	130	0.004	0.004	0.005	0.006
K	**SG / Nodular Cast Iron**	120 - 150	550	0.010	0.012	0.013	0.014
		150 - 200	520	0.010	0.011	0.012	0.013
		200 - 220	465	0.008	0.010	0.011	0.012
		220 - 260	405	0.008	0.009	0.010	0.011
		260 - 320	365	0.008	0.008	0.009	0.010
	Grey / White Iron	120 - 150	575	0.012	0.013	0.014	0.015
		150 - 200	550	0.011	0.012	0.013	0.014
		200 - 220	495	0.010	0.011	0.012	0.013
		220 - 260	425	0.009	0.010	0.011	0.012
		260 - 320	380	0.009	0.010	0.011	0.012
N	**Cast Aluminum**	30	1150	0.012	0.013	0.014	0.015
		180	860	0.011	0.012	0.013	0.014
	Wrought Aluminum	30	1600	0.013	0.015	0.016	0.017
		180	1150	0.012	0.014	0.015	0.016
	Aluminum Bronze	100 - 200	415	0.010	0.011	0.012	0.012
		200 - 250	335	0.008	0.009	0.010	0.011
	Brass	100	755	0.010	0.012	0.013	0.014
	Copper	60	490	0.003	0.003	0.003	0.004

7xD Adjustment Example (0.80 Adjustment)

Data • Adjustment Value	Speed/Feed (7xD)
200 SFM • 0.80	= 160 SFM
0.008 IPR • 0.80	= 0.0064 IPR

10xD and 12xD Adjustment Example (0.70 Adjustment)

Speed • Adjustment Value	Speed/Feed (10xD/12xD)
200 SFM • 0.70	= 140 SFM
0.008 IPR • 0.70	= 0.0056 IPR

⚠ WARNING **Tool failure can cause serious injury. To prevent:**

- When using holders without support bushing, use a short GEN3SYS holder to establish an initial hole that is a minimum of 2 diameters deep.
- Do not rotate tool holders more than 50 RPM unless it is engaged with the workpiece or fixture.

Visit **www.alliedmachine.com/DeepHoleGuidelines** for the most up-to-date information and procedures. Factory technical assistance is available for your specific applications through our Application Engineering Team. *ext:* **7611** | *email:* **appeng@alliedmachine.com**

IMPORTANT: The speeds and feeds listed above are a general starting point for all applications. Refer to the coolant recommendation charts for coolant requirements to run at the recommended speeds and feeds. Factory technical assistance is available through our Application Engineering department. For 7xD, 10xD, and 12xD holder lengths, see adjustment example above.

Feed Rate (IPR) by Diameter									
15 series 0.5906" - 0.6298"	16 series 0.6299" - 0.6692"	17 series 0.6693" - 0.7086"	18 series 0.7087" - 0.7873"	20 series 0.7874" - 0.8660"	22 series 0.8661" - 0.9448"	24 series 0.9449" - 1.0235"	26 series 1.0236" - 1.1416"	29 series 1.1417" - 1.2597"	32 series 1.2598" - 1.3780"
0.007	0.008	0.009	0.010	0.010	0.010	0.011	0.011	0.012	0.012
0.006	0.007	0.008	0.009	0.010	0.010	0.010	0.010	0.011	0.011
0.006	0.006	0.007	0.008	0.009	0.009	0.010	0.010	0.010	0.010
0.007	0.008	0.008	0.009	0.010	0.010	0.010	0.010	0.011	0.011
0.006	0.007	0.008	0.008	0.009	0.009	0.010	0.010	0.010	0.010
0.015	0.016	0.018	0.020	0.020	0.022	0.022	0.024	0.025	0.026
0.014	0.015	0.017	0.019	0.020	0.020	0.022	0.022	0.024	0.024
0.013	0.014	0.016	0.018	0.019	0.020	0.020	0.022	0.022	0.023
0.012	0.013	0.015	0.017	0.018	0.019	0.020	0.020	0.022	0.022
0.011	0.012	0.014	0.015	0.017	0.018	0.019	0.020	0.020	0.021
0.016	0.017	0.019	0.021	0.022	0.023	0.024	0.025	0.026	0.027
0.015	0.016	0.018	0.020	0.021	0.022	0.023	0.024	0.025	0.026
0.014	0.015	0.017	0.020	0.020	0.021	0.022	0.023	0.024	0.025
0.013	0.014	0.016	0.018	0.019	0.020	0.021	0.022	0.023	0.024
0.013	0.014	0.015	0.017	0.018	0.019	0.020	0.021	0.022	0.023
0.016	0.017	0.018	0.019	0.020	0.021	0.022	0.023	0.024	0.025
0.015	0.016	0.017	0.018	0.019	0.020	0.021	0.022	0.023	0.023
0.018	0.019	0.020	0.022	0.023	0.024	0.026	0.027	0.029	0.030
0.017	0.018	0.019	0.021	0.022	0.023	0.025	0.026	0.028	0.029
0.013	0.014	0.015	0.015	0.016	0.017	0.018	0.019	0.019	0.019
0.012	0.012	0.013	0.014	0.015	0.016	0.017	0.018	0.018	0.019
0.015	0.016	0.017	0.019	0.020	0.022	0.023	0.024	0.026	0.026
0.005	0.006	0.006	0.007	0.008	0.008	0.008	0.010	0.010	0.011

Coolant Recommendations

	Stub, 3xD, 5xD		7xD		10xD, 12xD	
Series	Pressure PSI	Flow Rate GPM	Pressure PSI	Flow Rate GPM	Pressure PSI	Flow Rate GPM
11	450	5	600	8	800	10
12	450	5	600	8	800	10
13	400	6	500	9.5	750	12
14	400	7	500	9.5	750	12
15	380	7	475	11	700	14
16	380	8	475	12	700	15
17	350	8	450	12.5	650	16.5
18	350	9	450	12.5	650	16.5
20	300	10	400	13	600	18
22	300	11	400	14	600	18
24	300	11	400	14	600	18
26	300	12	400	16	600	20
29	300	12	400	16	600	20
32	300	12	400	16	600	20

Recommended Drilling Data | Imperial (inch)

GEN3SYS XT

ISO	Material	Hardness (BHN)	Speed (SFM)	Feed Rate (IPR) by Diameter 11 series 0.4331" - 0.4723"	12 series 0.4724" - 0.5117"	13 series 0.5118" - 0.5511"	14 series 0.5512" - 0.5905"
P	**Free-Machining Steel** 1118, 1215, 12L14, etc.	100 - 150	480	0.009	0.011	0.012	0.013
		150 - 200	415	0.009	0.010	0.011	0.012
		200 - 250	390	0.007	0.008	0.009	0.010
	Low-Carbon Steel 1010, 1020, 1025, 1522, 1144, etc.	85 - 125	450	0.010	0.011	0.012	0.013
		125 - 175	390	0.009	0.010	0.011	0.012
		175 - 225	355	0.008	0.009	0.010	0.011
		225 - 275	310	0.006	0.007	0.008	0.009
	Medium-Carbon Steel 1030, 1040, 1050, 1527, 1140, 1151, etc.	125 - 175	390	0.009	0.010	0.011	0.012
		175 - 225	355	0.008	0.009	0.010	0.011
		225 - 275	310	0.007	0.008	0.009	0.010
		275 - 325	265	0.006	0.007	0.008	0.009
	Alloy Steel 4140, 5140, 8640, etc.	125 - 175	375	0.009	0.010	0.011	0.012
		175 - 225	345	0.008	0.009	0.010	0.011
		225 - 275	310	0.007	0.008	0.009	0.010
		275 - 325	285	0.006	0.006	0.007	0.008
		325 - 375	255	0.006	0.006	0.006	0.007
	High-Strength Alloy 4340, 4330V, 300M, etc.	225 - 300	230	0.007	0.008	0.009	0.010
		300 - 350	205	0.006	0.006	0.007	0.008
		350 - 400	185	0.005	0.006	0.006	0.007
	Structural Steel A36, A285, A516, etc.	100 - 150	355	0.009	0.010	0.011	0.012
		150 - 250	285	0.007	0.008	0.009	0.010
		250 - 350	265	0.006	0.007	0.008	0.009
	Tool Steel H-13, H-21, A-4, 0-2, S-3, etc.	150 - 200	255	0.006	0.006	0.006	0.007
		200 - 250	195	0.005	0.006	0.006	0.006
S	**High-Temp Alloy** Hastelloy B, Inconel 600, etc.	140 - 220	120	0.006	0.006	0.006	0.007
		220 - 310	95	0.005	0.006	0.006	0.006
	Titanium Alloy	140 - 220	140	0.005	0.006	0.006	0.007
		220 - 310	110	0.004	0.005	0.006	0.006
	Aerospace Alloy S82	185 - 275	145	0.004	0.004	0.005	0.005
		275 - 350	120	0.003	0.003	0.004	0.005
M	**Stainless Steel 400 Series** 416, 420, etc.	185 - 275	240	0.006	0.007	0.007	0.008
		275 - 350	185	0.005	0.006	0.006	0.007
	Stainless Steel 300 Series 304, 316, 17-4PH, etc.	135 - 185	220	0.004	0.005	0.005	0.006
		185 - 275	160	0.003	0.004	0.004	0.005
	Super Duplex Stainless Steel	135 - 185	125	0.003	0.003	0.003	0.004
		185 - 275	100	0.002	0.002	0.003	0.003

7xD Adjustment Example (0.80 Adjustment)

Data • Adjustment Value	Speed/Feed (7xD)
200 SFM • 0.80	= 160 SFM
0.008 IPR • 0.80	= 0.0064 IPR

⚠ WARNING **Tool failure can cause serious injury. To prevent:**
- When using holders without support bushing, use a short GEN3SYS holder to establish an initial hole that is a minimum of 2 diameters deep.
- Do not rotate tool holders more than 50 RPM unless it is engaged with the workpiece or fixture.

Visit **www.alliedmachine.com/DeepHoleGuidelines** for the most up-to-date information and procedures. Factory technical assistance is available for your specific applications through our Application Engineering Team. *ext:* **7611** | *email:* **appeng@alliedmachine.com**

IMPORTANT: The speeds and feeds listed above are a general starting point for all applications. Refer to the coolant recommendation charts for coolant requirements to run at the recommended speeds and feeds. Factory technical assistance is available through our Application Engineering department. For 7xD, 10xD, and 12xD holder lengths, see adjustment example above.

Feed Rate (IPR) by Diameter									
15 series 0.5906" - 0.6298"	16 series 0.6299" - 0.6692"	17 series 0.6693" - 0.7086"	18 series 0.7087" - 0.7873"	20 series 0.7874" - 0.8660"	22 series 0.8661" - 0.9448"	24 series 0.9449" - 1.0235"	26 series 1.0236" - 1.1416"	29 series 1.1417" - 1.2597"	32 series 1.2598" - 1.3780"
0.014	0.015	0.016	0.017	0.019	0.020	0.021	0.022	0.023	0.024
0.013	0.014	0.015	0.016	0.017	0.018	0.019	0.020	0.021	0.022
0.011	0.012	0.013	0.015	0.017	0.017	0.018	0.019	0.020	0.021
0.014	0.015	0.016	0.017	0.019	0.020	0.021	0.022	0.023	0.024
0.013	0.014	0.015	0.016	0.017	0.018	0.019	0.020	0.021	0.022
0.012	0.013	0.014	0.015	0.016	0.017	0.018	0.019	0.020	0.021
0.010	0.011	0.012	0.014	0.015	0.016	0.017	0.017	0.018	0.019
0.013	0.014	0.015	0.017	0.018	0.019	0.020	0.021	0.022	0.023
0.012	0.013	0.014	0.016	0.017	0.018	0.019	0.020	0.021	0.022
0.011	0.012	0.013	0.015	0.016	0.017	0.018	0.019	0.020	0.021
0.010	0.011	0.012	0.014	0.015	0.016	0.017	0.017	0.018	0.019
0.013	0.014	0.015	0.017	0.018	0.019	0.020	0.021	0.022	0.023
0.012	0.013	0.014	0.016	0.017	0.018	0.019	0.020	0.021	0.022
0.011	0.012	0.013	0.015	0.015	0.017	0.018	0.019	0.020	0.021
0.009	0.010	0.011	0.013	0.014	0.015	0.016	0.017	0.018	0.018
0.008	0.009	0.010	0.012	0.013	0.014	0.015	0.016	0.017	0.017
0.010	0.011	0.012	0.013	0.014	0.015	0.016	0.017	0.017	0.018
0.009	0.010	0.010	0.011	0.012	0.013	0.014	0.015	0.016	0.017
0.008	0.009	0.009	0.010	0.011	0.012	0.013	0.014	0.015	0.016
0.012	0.014	0.014	0.016	0.017	0.019	0.020	0.021	0.022	0.023
0.011	0.012	0.013	0.014	0.016	0.017	0.018	0.019	0.020	0.021
0.010	0.011	0.012	0.013	0.014	0.016	0.017	0.018	0.019	0.020
0.007	0.008	0.008	0.009	0.010	0.011	0.012	0.013	0.014	0.015
0.006	0.007	0.007	0.008	0.009	0.010	0.011	0.012	0.013	0.014
0.007	0.008	0.008	0.009	0.010	0.010	0.011	0.011	0.012	0.013
0.006	0.007	0.007	0.008	0.009	0.009	0.010	0.010	0.011	0.012
0.007	0.008	0.008	0.009	0.010	0.010	0.011	0.011	0.012	0.013
0.006	0.007	0.007	0.008	0.009	0.009	0.010	0.010	0.011	0.011
0.006	0.006	0.006	0.006	0.007	0.007	0.008	0.009	0.010	0.011
0.005	0.006	0.006	0.006	0.006	0.007	0.007	0.008	0.009	0.010
0.008	0.009	0.010	0.011	0.012	0.013	0.014	0.015	0.016	0.017
0.007	0.008	0.009	0.010	0.011	0.012	0.013	0.014	0.015	0.016
0.006	0.007	0.007	0.008	0.008	0.009	0.009	0.010	0.010	0.011
0.005	0.006	0.006	0.007	0.007	0.008	0.008	0.009	0.009	0.010
0.004	0.005	0.005	0.006	0.006	0.007	0.008	0.008	0.008	0.010
0.004	0.004	0.005	0.005	0.006	0.006	0.007	0.007	0.008	0.008

Coolant Recommendations

	3xD, 5xD		7xD		10xD, 12xD	
Series	Pressure PSI	Flow Rate GPM	Pressure PSI	Flow Rate GPM	Pressure PSI	Flow Rate GPM
11	450	5	600	8	800	10
12	450	5	600	8	800	10
13	400	6	500	9.5	750	12
14	400	7	500	9.5	750	12
15	380	7	475	11	700	14
16	380	8	475	12	700	15
17	350	8	450	12.5	650	16.5
18	350	9	450	12.5	650	16.5
20	300	10	400	13	600	18
22	300	11	400	14	600	18
24	300	11	400	14	600	18
26	300	12	400	16	600	20
29	300	12	400	16	600	20
32	300	12	400	16	600	20

Recommended Drilling Data | Imperial (inch)

GEN3SYS XT

ISO	Material	Hardness (BHN)	Speed (SFM)	Feed Rate (IPR) by Diameter			
				11 series 0.4331" - 0.4723"	12 series 0.4724" - 0.5117"	13 series 0.5118" - 0.5511"	14 series 0.5512" - 0.5905"
H	**Wear Plate** Hardox®, AR400, T-1, etc.	400	145	0.005	0.005	0.006	0.006
		500	110	0.004	0.004	0.005	0.006
		600	80	0.004	0.004	0.004	0.005
	Hardened Steel	300 - 400	155	0.005	0.005	0.006	0.006
		400 - 500	120	0.004	0.004	0.005	0.006
K	**SG / Nodular Cast Iron**	120 - 150	480	0.009	0.011	0.012	0.013
		150 - 200	450	0.009	0.010	0.011	0.012
		200 - 220	400	0.007	0.009	0.010	0.011
		220 - 260	350	0.007	0.008	0.009	0.010
		260 - 320	320	0.007	0.007	0.008	0.009
	Grey / White Iron	120 - 150	500	0.011	0.012	0.013	0.014
		150 - 200	480	0.010	0.011	0.012	0.013
		200 - 220	430	0.009	0.010	0.011	0.012
		220 - 260	370	0.008	0.009	0.010	0.011
		260 - 320	335	0.008	0.009	0.010	0.011
N	**Cast Aluminum**	30	1000	0.011	0.012	0.013	0.014
		180	750	0.010	0.011	0.012	0.013
	Wrought Aluminum	30	1400	0.012	0.014	0.015	0.016
		180	1000	0.011	0.013	0.014	0.015
	Aluminum Bronze	100 - 200	360	0.009	0.010	0.011	0.011
		200 - 250	295	0.007	0.008	0.009	0.010
	Brass	100	660	0.009	0.011	0.012	0.013
	Copper	60	425	0.003	0.003	0.003	0.004

7xD Adjustment Example (0.80 Adjustment)

Data • Adjustment Value	Speed/Feed (7xD)
200 SFM • 0.80	= 160 SFM
0.008 IPR • 0.80	= 0.0064 IPR

⚠ WARNING **Tool failure can cause serious injury. To prevent:**

- When using holders without support bushing, use a short GEN3SYS holder to establish an initial hole that is a minimum of 2 diameters deep.
- Do not rotate tool holders more than 50 RPM unless it is engaged with the workpiece or fixture.

Visit **www.alliedmachine.com/DeepHoleGuidelines** for the most up-to-date information and procedures. Factory technical assistance is available for your specific applications through our Application Engineering Team. *ext:* **7611** | *email:* **appeng@alliedmachine.com**

IMPORTANT: The speeds and feeds listed above are a general starting point for all applications. Refer to the coolant recommendation charts for coolant requirements to run at the recommended speeds and feeds. Factory technical assistance is available through our Application Engineering department. For 7xD, 10xD, and 12xD holder lengths, see adjustment example above.

Feed Rate (IPR) by Diameter									
15 series 0.5906" - 0.6298"	16 series 0.6299" - 0.6692"	17 series 0.6693" - 0.7086"	18 series 0.7087" - 0.7873"	20 series 0.7874" - 0.8660"	22 series 0.8661" - 0.9448"	24 series 0.9449" - 1.0235"	26 series 1.0236" - 1.1416"	29 series 1.1417" - 1.2597"	32 series 1.2598" - 1.3780"
0.006	0.007	0.008	0.009	0.009	0.009	0.010	0.010	0.011	0.011
0.006	0.006	0.007	0.008	0.009	0.009	0.009	0.009	0.010	0.010
0.006	0.006	0.006	0.007	0.008	0.008	0.009	0.009	0.009	0.009
0.006	0.007	0.007	0.008	0.009	0.009	0.009	0.009	0.010	0.010
0.006	0.006	0.007	0.007	0.008	0.008	0.009	0.009	0.009	0.009
0.014	0.015	0.017	0.018	0.018	0.020	0.020	0.022	0.023	0.024
0.013	0.014	0.016	0.017	0.018	0.018	0.020	0.020	0.022	0.022
0.012	0.013	0.015	0.016	0.017	0.018	0.018	0.020	0.020	0.021
0.011	0.012	0.014	0.015	0.016	0.017	0.018	0.018	0.020	0.020
0.010	0.011	0.013	0.014	0.015	0.016	0.017	0.018	0.018	0.019
0.015	0.016	0.018	0.019	0.020	0.021	0.022	0.023	0.024	0.025
0.014	0.015	0.017	0.018	0.019	0.020	0.021	0.022	0.023	0.024
0.013	0.014	0.016	0.018	0.018	0.019	0.020	0.021	0.022	0.023
0.012	0.013	0.015	0.017	0.017	0.018	0.019	0.020	0.021	0.022
0.012	0.013	0.014	0.016	0.016	0.017	0.018	0.019	0.020	0.021
0.015	0.016	0.017	0.017	0.018	0.019	0.020	0.021	0.022	0.023
0.014	0.015	0.016	0.016	0.017	0.018	0.019	0.020	0.021	0.021
0.017	0.017	0.018	0.020	0.021	0.022	0.024	0.025	0.027	0.028
0.016	0.016	0.017	0.019	0.020	0.021	0.023	0.024	0.026	0.027
0.012	0.013	0.014	0.014	0.015	0.016	0.017	0.017	0.017	0.017
0.011	0.011	0.012	0.013	0.014	0.015	0.016	0.016	0.016	0.016
0.014	0.015	0.016	0.017	0.018	0.020	0.021	0.022	0.024	0.024
0.005	0.006	0.006	0.006	0.007	0.007	0.007	0.009	0.009	0.010

Coolant Recommendations

	3xD, 5xD		7xD		10xD, 12xD	
Series	Pressure PSI	Flow Rate GPM	Pressure PSI	Flow Rate GPM	Pressure PSI	Flow Rate GPM
11	450	5	600	8	800	10
12	450	5	600	8	800	10
13	400	6	500	9.5	750	12
14	400	7	500	9.5	750	12
15	380	7	475	11	700	14
16	380	8	475	12	700	15
17	350	8	450	12.5	650	16.5
18	350	9	450	12.5	650	16.5
20	300	10	400	13	600	18
22	300	11	400	14	600	18
24	300	11	400	14	600	18
26	300	12	400	16	600	20
29	300	12	400	16	600	20
32	300	12	400	16	600	20

Recommended Drilling Data | Metric (mm)

GEN3SYS XT Pro

ISO	Material	Hardness (BHN)	Speed (M/mm)	Feed Rate (mm/rev) by Diameter			
				11 series 11.00 mm - 11.99 mm	12 series 12.00 mm - 12.99 mm	13 series 13.00 mm - 13.99 mm	14 series 14.00 mm - 14.99 mm
P	**Free-Machining Steel**	100 - 150	168	0.28	0.30	0.33	0.36
	1118, 1215, 12L14, etc.	150 - 200	145	0.25	0.28	0.30	0.33
		200 - 250	130	0.20	0.23	0.25	0.28
	Low-Carbon Steel	85 - 125	158	0.28	0.3	0.33	0.36
	1010, 1020, 1025, 1522, 1144, etc.	125 - 175	137	0.25	0.28	0.30	0.33
		175 - 225	125	0.23	0.25	0.28	0.30
		225 - 275	107	0.18	0.20	0.23	0.25
	Medium-Carbon Steel	125 - 175	137	0.25	0.28	0.30	0.33
	1030, 1040, 1050, 1527, 1140, 1151, etc.	175 - 225	125	0.23	0.25	0.28	0.30
		225 - 275	107	0.20	0.23	0.25	0.28
		275 - 325	91	0.18	0.20	0.23	0.25
	Alloy Steel	125 - 175	126	0.25	0.28	0.30	0.33
	4140, 5140, 8640, etc.	175 - 225	116	0.23	0.25	0.28	0.30
		225 - 275	104	0.20	0.23	0.25	0.28
		275 - 325	94	0.15	0.18	0.20	0.23
		325 - 375	85	0.15	0.15	0.18	0.20
	High-Strength Alloy	225 - 300	76	0.20	0.23	0.25	0.28
	4340, 4330V, 300M, etc.	300 - 350	69	0.15	0.18	0.20	0.23
		350 - 400	61	0.13	0.18	0.18	0.20
	Structural Steel	100 - 150	125	0.25	0.28	0.30	0.33
	A36, A285, A516, etc.	150 - 250	101	0.20	0.23	0.25	0.28
		250 - 350	93	0.18	0.20	0.23	0.25
	Tool Steel	150 - 200	81	0.15	0.18	0.18	0.20
	H-13, H-21, A-4, 0-2, S-3, etc.	200 - 250	62	0.13	0.15	0.15	0.18
S	**High-Temp Alloy**	140 - 220	40	0.15	0.18	0.18	0.20
	Hastelloy B, Inconel 600, etc.	220 - 310	30	0.13	0.15	0.15	0.18
	Titanium Alloy	140 - 220	43	0.13	0.15	0.18	0.20
		220 - 310	34	0.10	0.13	0.15	0.18
	Aerospace Alloy	185 - 275	50	0.10	0.10	0.12	0.14
	S82	275 - 350	41	0.09	0.09	0.10	0.12
M	**Stainless Steel 400 Series**	185 - 275	73	0.15	0.18	0.18	0.20
	416, 420, etc.	275 - 350	56	0.13	0.15	0.15	0.18
	Stainless Steel 300 Series	135 - 185	64	0.10	0.13	0.13	0.15
	304, 316, 17-4PH, etc.	185 - 275	47	0.08	0.10	0.10	0.13
	Super Duplex Stainless Steel	135 - 185	38	0.08	0.08	0.08	0.10
		185 - 275	30	0.05	0.05	0.08	0.08

7xD Adjustment Example (0.80 Adjustment)

Data • Adjustment Value	Speed/Feed (7xD)
61 m/min • 0.80	= 48.8 m/min
0.20 mm/rev • 0.80	= 0.16 mm/rev

10xD and 12xD Adjustment Example (0.70 Adjustment)

Speed • Adjustment Value	Speed/Feed (10xD/12xD)
61 m/min • 0.70	= 42.7 m/min
0.20 mm/rev • 0.70	= 0.14 mm/rev

⚠ WARNING **Tool failure can cause serious injury. To prevent:**

- When using holders without support bushing, use a short GEN3SYS holder to establish an initial hole that is a minimum of 2 diameters deep.
- Do not rotate tool holders more than 50 RPM unless it is engaged with the workpiece or fixture.

Visit **www.alliedmachine.com/DeepHoleGuidelines** for the most up-to-date information and procedures. Factory technical assistance is available for your specific applications through our Application Engineering Team. *ext:* **7611** | *email:* **appeng@alliedmachine.com**

IMPORTANT: The speeds and feeds listed above are a general starting point for all applications. Refer to the coolant recommendation charts for coolant requirements to run at the recommended speeds and feeds. Factory technical assistance is available through our Application Engineering department. For 7xD, 10xD, and 12xD holder lengths, see adjustment example above.

Feed Rate (mm/rev) by Diameter									
15 series 15.00 mm - 15.99 mm	16 series 16.00 mm - 16.99 mm	17 series 17.00 mm - 17.99 mm	18 series 18.00 mm - 19.99 mm	20 series 20.00 mm - 21.99 mm	22 series 22.00 mm - 23.99 mm	24 series 24.00 mm - 25.99 mm	26 series 26.00 mm - 28.99 mm	29 series 29.00 mm - 31.99 mm	32 series 32.00 mm - 35.00 mm
0.38	0.41	0.43	0.48	0.53	0.56	0.58	0.61	0.64	0.66
0.36	0.38	0.41	0.43	0.48	0.51	0.53	0.56	0.58	0.61
0.30	0.33	0.36	0.41	0.46	0.48	0.51	0.53	0.56	0.58
0.38	0.41	0.43	0.48	0.53	0.56	0.58	0.61	0.64	0.66
0.36	0.38	0.41	0.46	0.48	0.51	0.53	0.56	0.58	0.61
0.33	0.36	0.38	0.42	0.46	0.48	0.51	0.53	0.56	0.58
0.28	0.30	0.33	0.38	0.41	0.42	0.46	0.48	0.51	0.53
0.36	0.38	0.41	0.46	0.51	0.53	0.56	0.58	0.61	0.64
0.33	0.36	0.38	0.43	0.48	0.51	0.53	0.56	0.58	0.61
0.30	0.33	0.36	0.41	0.46	0.48	0.51	0.53	0.56	0.58
0.28	0.30	0.33	0.38	0.41	0.43	0.46	0.48	0.51	0.53
0.36	0.38	0.41	0.46	0.51	0.53	0.56	0.58	0.61	0.64
0.33	0.36	0.38	0.43	0.48	0.51	0.53	0.56	0.58	0.61
0.30	0.33	0.36	0.41	0.46	0.48	0.51	0.53	0.56	0.58
0.25	0.28	0.30	0.36	0.38	0.41	0.43	0.46	0.48	0.51
0.23	0.25	0.28	0.33	0.36	0.38	0.41	0.43	0.46	0.48
0.28	0.30	0.33	0.36	0.38	0.41	0.43	0.46	0.48	0.51
0.25	0.28	0.28	0.30	0.33	0.36	0.38	0.41	0.43	0.46
0.23	0.25	0.25	0.28	0.30	0.33	0.36	0.38	0.41	0.43
0.33	0.38	0.38	0.43	0.48	0.53	0.56	0.58	0.61	0.64
0.30	0.33	0.36	0.38	0.43	0.48	0.51	0.53	0.56	0.58
0.28	0.30	0.33	0.36	0.38	0.43	0.48	0.51	0.53	0.56
0.20	0.23	0.23	0.25	0.28	0.30	0.33	0.36	0.38	0.41
0.18	0.20	0.20	0.23	0.25	0.28	0.30	0.33	0.36	0.38
0.20	0.23	0.23	0.25	0.28	0.28	0.30	0.30	0.33	0.36
0.18	0.20	0.20	0.23	0.25	0.25	0.28	0.28	0.30	0.33
0.20	0.23	0.23	0.25	0.28	0.28	0.30	0.30	0.33	0.33
0.18	0.20	0.20	0.23	0.25	0.25	0.28	0.28	0.30	0.30
0.15	0.16	0.18	0.18	0.20	0.22	0.24	0.26	0.28	0.31
0.14	0.15	0.16	0.16	0.18	0.20	0.22	0.24	0.26	0.29
0.20	0.23	0.25	0.28	0.30	0.33	0.36	0.38	0.41	0.43
0.18	0.20	0.23	0.25	0.28	0.30	0.33	0.36	0.38	0.41
0.15	0.18	0.18	0.20	0.20	0.23	0.23	0.25	0.25	0.28
0.13	0.15	0.15	0.18	0.18	0.20	0.20	0.23	0.23	0.25
0.10	0.13	0.13	0.15	0.15	0.18	0.20	0.20	0.20	0.25
0.10	0.10	0.13	0.13	0.15	0.15	0.18	0.18	0.20	0.20

Coolant Recommendations

	Stub, 3xD, 5xD		7xD		10xD, 12xD	
Series	Pressure BAR	Flow Rate LPM	Pressure BAR	Flow Rate LPM	Pressure BAR	Flow Rate LPM
11	31	19	41	30	55	38
12	31	19	41	30	55	38
13	28	23	34	36	52	45
14	28	26	34	36	52	45
15	26	26	33	42	48	53
16	26	30	33	45	48	57
17	24	30	31	47	45	62
18	24	34	31	47	45	62
20	21	38	28	49	41	68
22	21	42	28	53	41	68
24	21	42	28	53	41	68
26	21	45	28	61	41	76
29	21	45	28	61	41	76
32	21	45	28	61	41	76

Recommended Drilling Data | Metric (mm)

GEN3SYS XT Pro

ISO	Material	Hardness (BHN)	Speed (m/min)	Feed Rate (mm/rev) by Diameter			
				11 series 11.00 mm - 11.99 mm	12 series 12.00 mm - 12.99 mm	13 series 13.00 mm - 13.99 mm	14 series 14.00 mm - 14.99 mm
H	**Wear Plate** Hardox®, AR400, T-1, etc.	400	50	0.13	0.13	0.15	0.17
		500	40	0.11	0.11	0.13	0.15
		600	27	0.10	0.10	0.11	0.13
	Hardened Steel	300 - 400	51	0.13	0.13	0.15	0.17
		400 - 500	40	0.11	0.11	0.13	0.15
K	**SG / Nodular Cast Iron**	120 - 150	168	0.27	0.30	0.33	0.36
		150 - 200	159	0.25	0.28	0.30	0.33
		200 - 220	141	0.22	0.25	0.28	0.30
		220 - 260	124	0.20	0.23	0.25	0.28
		260 - 320	112	0.20	0.21	0.23	0.25
	Grey / White Iron	120 - 150	175	0.30	0.33	0.36	0.38
		150 - 200	168	0.28	0.30	0.33	0.36
		200 - 220	151	0.25	0.28	0.30	0.33
		220 - 260	130	0.23	0.25	0.28	0.30
		260 - 320	116	0.23	0.25	0.28	0.30
N	**Cast Aluminum**	30	351	0.30	0.33	0.36	0.38
		180	262	0.28	0.30	0.33	0.36
	Wrought Aluminum	30	488	0.33	0.38	0.41	0.43
		180	351	0.30	0.36	0.38	0.41
	Aluminum Bronze	100 - 200	126	0.26	0.28	0.30	0.32
		200 - 250	103	0.22	0.24	0.26	0.28
	Brass	100	230	0.29	0.30	0.33	0.36
	Copper	60	149	0.07	0.08	0.09	0.11

7xD Adjustment Example (0.80 Adjustment)

Data • Adjustment Value	Speed/Feed (7xD)
61 m/min • 0.80	= 48.8 m/min
0.20 mm/rev • 0.80	= 0.16 mm/rev

10xD and 12xD Adjustment Example (0.70 Adjustment)

Speed • Adjustment Value	Speed/Feed (10xD/12xD)
61 m/min • 0.70	= 42.7 m/min
0.20 mm/rev • 0.70	= 0.14 mm/rev

⚠ WARNING **Tool failure can cause serious injury. To prevent:**

- When using holders without support bushing, use a short GEN3SYS holder to establish an initial hole that is a minimum of 2 diameters deep.
- Do not rotate tool holders more than 50 RPM unless it is engaged with the workpiece or fixture.

Visit **www.alliedmachine.com/DeepHoleGuidelines** for the most up-to-date information and procedures. Factory technical assistance is available for your specific applications through our Application Engineering Team. *ext:* **7611** | *email:* **appeng@alliedmachine.com**

IMPORTANT: The speeds and feeds listed above are a general starting point for all applications. Refer to the coolant recommendation charts for coolant requirements to run at the recommended speeds and feeds. Factory technical assistance is available through our Application Engineering department. For 7xD, 10xD, and 12xD holder lengths, see adjustment example above.

Feed Rate (mm/rev) by Diameter									
15 series 15.00mm - 15.99mm	16 series 16.00 mm - 16.99 mm	17 series 17.00 mm - 17.99 mm	18 series 18.00 mm - 19.99 mm	20 series 20.00 mm - 21.99 mm	22 series 22.00 mm - 23.99 mm	24 series 24.00 mm - 25.99 mm	26 series 26.00 mm - 28.99 mm	29 series 29.00 mm - 31.99 mm	32 series 32.00 mm - 35.00 mm
0.19	0.21	0.23	0.25	0.27	0.27	0.29	0.29	0.31	0.31
0.17	0.19	0.21	0.23	0.25	0.25	0.27	0.27	0.29	0.29
0.15	0.17	0.19	0.21	0.23	0.23	0.25	0.25	0.25	0.27
0.19	0.21	0.22	0.23	0.25	0.25	0.27	0.27	0.29	0.29
0.17	0.19	0.20	0.21	0.23	0.23	0.25	0.25	0.27	0.27
0.38	0.41	0.46	0.51	0.53	0.56	0.58	0.61	0.64	0.66
0.36	0.38	0.43	0.48	0.51	0.53	0.56	0.58	0.61	0.63
0.33	0.36	0.41	0.46	0.48	0.51	0.53	0.56	0.58	0.60
0.30	0.33	0.38	0.43	0.46	0.48	0.51	0.53	0.56	0.58
0.28	0.30	0.36	0.38	0.43	0.46	0.48	0.51	0.53	0.55
0.41	0.43	0.48	0.53	0.56	0.58	0.61	0.64	0.66	0.69
0.38	0.41	0.46	0.51	0.53	0.56	0.58	0.61	0.64	0.66
0.36	0.38	0.43	0.51	0.51	0.53	0.56	0.58	0.61	0.64
0.33	0.36	0.41	0.46	0.48	0.51	0.53	0.56	0.58	0.61
0.33	0.36	0.38	0.43	0.46	0.48	0.51	0.53	0.56	0.58
0.41	0.43	0.46	0.48	0.51	0.53	0.56	0.58	0.61	0.64
0.38	0.41	0.43	0.46	0.48	0.51	0.53	0.56	0.58	0.58
0.46	0.48	0.51	0.53	0.56	0.61	0.66	0.69	0.74	0.76
0.43	0.46	0.48	0.53	0.56	0.58	0.64	0.66	0.71	0.74
0.34	0.36	0.38	0.40	0.42	0.44	0.46	0.48	0.48	0.50
0.30	0.32	0.34	0.36	0.38	0.42	0.46	0.46	0.46	0.48
0.38	0.41	0.43	0.48	0.53	0.56	0.60	0.63	0.66	0.66
0.13	0.15	0.16	0.18	0.20	0.20	0.22	0.25	0.25	0.28

Coolant Recommendations

	Stub, 3xD, 5xD		7xD		10xD, 12xD	
Series	**Pressure BAR**	**Flow Rate LPM**	**Pressure BAR**	**Flow Rate LPM**	**Pressure BAR**	**Flow Rate LPM**
11	31	19	41	30	55	38
12	31	19	41	30	55	38
13	28	23	34	36	52	45
14	28	26	34	36	52	45
15	26	26	33	42	48	53
16	26	30	33	45	48	57
17	24	30	31	47	45	62
18	24	34	31	47	45	62
20	21	38	28	49	41	68
22	21	42	28	53	41	68
24	21	42	28	53	41	68
26	21	45	28	61	41	76
29	21	45	28	61	41	76
32	21	45	28	61	41	76

Recommended Drilling Data | Metric (mm)

GEN3SYS XT

ISO	Material	Hardness (BHN)	Speed (M/mm)	Feed Rate (mm/rev) by Diameter			
				11 series 11.00 mm - 11.99 mm	12 series 12.00 mm - 12.99 mm	13 series 13.00 mm - 13.99 mm	14 series 14.00 mm - 14.99 mm
P	**Free-Machining Steel**	100 - 150	146	0.23	0.28	0.30	0.33
	1118, 1215, 12L14, etc.	150 - 200	126	0.23	0.26	0.28	0.30
		200 - 250	119	0.19	0.21	0.23	0.26
	Low-Carbon Steel	85 - 125	137	0.26	0.28	0.30	0.33
	1010, 1020, 1025, 1522, 1144, etc.	125 - 175	119	0.23	0.26	0.28	0.30
		175 - 225	108	0.21	0.23	0.26	0.28
		225 - 275	95	0.16	0.19	0.21	0.23
	Medium-Carbon Steel	125 - 175	119	0.23	0.26	0.28	0.30
	1030, 1040, 1050, 1527, 1140, 1151, etc.	175 - 225	108	0.21	0.23	0.26	0.28
		225 - 275	95	0.19	0.21	0.23	0.26
		275 - 325	81	0.16	0.19	0.21	0.23
	Alloy Steel	125 - 175	114	0.23	0.26	0.28	0.30
	4140, 5140, 8640, etc.	175 - 225	105	0.21	0.23	0.26	0.28
		225 - 275	95	0.19	0.21	0.23	0.26
		275 - 325	87	0.14	0.16	0.19	0.21
		325 - 375	78	0.14	0.14	0.16	0.19
	High-Strength Alloy	225 - 300	70	0.19	0.21	0.23	0.26
	4340, 4330V, 300M, etc.	300 - 350	63	0.14	0.16	0.19	0.21
		350 - 400	56	0.12	0.14	0.16	0.19
	Structural Steel	100 - 150	108	0.23	0.26	0.28	0.30
	A36, A285, A516, etc.	150 - 250	87	0.19	0.21	0.23	0.26
		250 - 350	81	0.16	0.19	0.21	0.23
	Tool Steel	150 - 200	78	0.14	0.16	0.16	0.19
	H-13, H-21, A-4, 0-2, S-3, etc.	200 - 250	59	0.12	0.14	0.14	0.16
S	**High-Temp Alloy**	140 - 220	37	0.14	0.16	0.16	0.19
	Hastelloy B, Inconel 600, etc.	220 - 310	29	0.12	0.14	0.14	0.16
	Titanium Alloy	140 - 220	42	0.12	0.14	0.16	0.19
		220 - 310	33	0.09	0.12	0.14	0.16
	Aerospace Alloy	185 - 275	45	0.09	0.09	0.12	0.12
	S82	275 - 350	37	0.07	0.07	0.09	0.12
M	**Stainless Steel 400 Series**	185 - 275	73	0.15	0.18	0.18	0.20
	416, 420, etc.	275 - 350	56	0.13	0.15	0.15	0.18
	Stainless Steel 300 Series	135 - 185	64	0.10	0.13	0.13	0.15
	304, 316, 17-4PH, etc.	185 - 275	47	0.08	0.10	0.10	0.13
	Super Duplex Stainless Steel	135 - 185	38	0.08	0.08	0.08	0.10
		185 - 275	30	0.05	0.05	0.08	0.08

7xD Adjustment Example (0.80 Adjustment)

Data • Adjustment Value	Speed/Feed (7xD)
61 m/min • 0.80	= 48.8 m/min
0.20 mm/rev • 0.80	= 0.16 mm/rev

⚠ WARNING **Tool failure can cause serious injury. To prevent:**

- When using holders without support bushing, use a short GEN3SYS holder to establish an initial hole that is a minimum of 2 diameters deep.
- Do not rotate tool holders more than 50 RPM unless it is engaged with the workpiece or fixture.

Visit **www.alliedmachine.com/DeepHoleGuidelines** for the most up-to-date information and procedures. Factory technical assistance is available for your specific applications through our Application Engineering Team. *ext:* **7611** | *email:* **appeng@alliedmachine.com**

IMPORTANT: The speeds and feeds listed above are a general starting point for all applications. Refer to the coolant recommendation charts for coolant requirements to run at the recommended speeds and feeds. Factory technical assistance is available through our Application Engineering department. For 7xD, 10xD, and 12xD holder lengths, see adjustment example above.

Feed Rate (mm/rev) by Diameter									
15 series 15.00 mm - 15.99 mm	16 series 16.00 mm - 16.99 mm	17 series 17.00 mm - 17.99 mm	18 series 18.00 mm - 19.99 mm	20 series 20.00 mm - 21.99 mm	22 series 22.00 mm - 23.99 mm	24 series 24.00 mm - 25.99 mm	26 series 26.00 mm - 28.99 mm	29 series 29.00 mm - 31.99 mm	32 series 32.00 mm - 35.00 mm
0.35	0.37	0.40	0.44	0.49	0.51	0.54	0.56	0.58	0.61
0.33	0.35	0.37	0.40	0.44	0.47	0.49	0.51	0.54	0.56
0.28	0.30	0.33	0.37	0.42	0.44	0.47	0.49	0.51	0.54
0.35	0.37	0.40	0.44	0.49	0.51	0.54	0.56	0.58	0.61
0.33	0.35	0.37	0.41	0.44	0.47	0.49	0.51	0.54	0.56
0.30	0.33	0.35	0.38	0.41	0.44	0.47	0.49	0.51	0.54
0.26	0.28	0.30	0.35	0.37	0.40	0.42	0.44	0.47	0.49
0.33	0.35	0.37	0.42	0.47	0.49	0.51	0.54	0.56	0.58
0.30	0.33	0.35	0.40	0.44	0.47	0.49	0.51	0.54	0.56
0.28	0.30	0.33	0.37	0.41	0.44	0.47	0.49	0.51	0.54
0.26	0.28	0.30	0.35	0.37	0.40	0.42	0.44	0.47	0.49
0.33	0.35	0.37	0.42	0.47	0.49	0.51	0.54	0.56	0.58
0.30	0.33	0.35	0.40	0.44	0.47	0.49	0.51	0.54	0.56
0.28	0.30	0.33	0.37	0.38	0.44	0.47	0.49	0.51	0.54
0.23	0.26	0.28	0.33	0.35	0.37	0.40	0.42	0.46	0.47
0.21	0.23	0.26	0.30	0.33	0.35	0.37	0.40	0.42	0.44
0.26	0.28	0.30	0.33	0.35	0.37	0.40	0.42	0.44	0.47
0.23	0.26	0.26	0.28	0.30	0.33	0.35	0.37	0.40	0.42
0.21	0.23	0.23	0.26	0.28	0.30	0.33	0.35	0.37	0.40
0.30	0.35	0.35	0.40	0.44	0.49	0.51	0.54	0.56	0.58
0.28	0.30	0.33	0.35	0.40	0.44	0.47	0.49	0.51	0.54
0.26	0.28	0.30	0.33	0.35	0.40	0.44	0.47	0.49	0.51
0.19	0.21	0.21	0.23	0.26	0.28	0.30	0.33	0.35	0.37
0.16	0.19	0.19	0.21	0.23	0.26	0.28	0.30	0.33	0.35
0.19	0.21	0.21	0.23	0.26	0.26	0.28	0.28	0.30	0.33
0.16	0.19	0.19	0.21	0.23	0.23	0.26	0.26	0.28	0.30
0.19	0.21	0.21	0.23	0.26	0.26	0.28	0.28	0.30	0.33
0.16	0.19	0.19	0.21	0.23	0.23	0.26	0.26	0.28	0.28
0.14	0.14	0.16	0.16	0.19	0.19	0.21	0.23	0.26	0.28
0.12	0.14	0.14	0.14	0.16	0.19	0.19	0.21	0.23	0.26
0.20	0.23	0.25	0.28	0.30	0.33	0.36	0.38	0.41	0.43
0.18	0.20	0.23	0.25	0.28	0.30	0.33	0.36	0.38	0.41
0.15	0.18	0.18	0.20	0.20	0.23	0.23	0.25	0.25	0.28
0.13	0.15	0.15	0.18	0.18	0.20	0.20	0.23	0.23	0.25
0.10	0.13	0.13	0.15	0.15	0.18	0.20	0.20	0.20	0.25
0.10	0.10	0.13	0.13	0.15	0.15	0.18	0.18	0.20	0.20

Coolant Recommendations

	3xD, 5xD		7xD		10xD, 12xD	
Series	Pressure BAR	Flow Rate LPM	Pressure BAR	Flow Rate LPM	Pressure BAR	Flow Rate LPM
11	31	19	41	30	55	38
12	31	19	41	30	55	38
13	28	23	34	36	52	45
14	28	26	34	36	52	45
15	26	26	33	42	48	53
16	26	30	33	45	48	57
17	24	30	31	47	45	62
18	24	34	31	47	45	62
20	21	38	28	49	41	68
22	21	42	28	53	41	68
24	21	42	28	53	41	68
26	21	45	28	61	41	76
29	21	45	28	61	41	76
32	21	45	28	61	41	76

Recommended Drilling Data | Metric (mm)

GEN3SYS XT

ISO	Material	Hardness (BHN)	Speed (m/min)	Feed Rate (mm/rev) by Diameter			
				11 series 11.00 mm - 11.99 mm	12 series 12.00 mm - 12.99 mm	13 series 13.00 mm - 13.99 mm	14 series 14.00 mm - 14.99 mm
H	**Wear Plate** Hardox®, AR400, T-1, etc.	400	45	0.12	0.12	0.14	0.14
		500	37	0.09	0.09	0.12	0.14
		600	25	0.09	0.09	0.09	0.12
	Hardened Steel	300 - 400	47	0.12	0.12	0.14	0.14
		400 - 500	37	0.09	0.09	0.12	0.14
K	**SG / Nodular Cast Iron**	120 - 150	146	0.23	0.28	0.30	0.33
		150 - 200	138	0.23	0.26	0.28	0.30
		200 - 220	123	0.19	0.23	0.26	0.28
		220 - 260	108	0.19	0.21	0.23	0.26
		260 - 320	97	0.19	0.19	0.21	0.23
	Grey / White Iron	120 - 150	152	0.28	0.30	0.33	0.35
		150 - 200	146	0.26	0.28	0.30	0.33
		200 - 220	131	0.23	0.26	0.28	0.30
		220 - 260	113	0.21	0.23	0.26	0.28
		260 - 320	102	0.21	0.23	0.26	0.28
N	**Cast Aluminum**	30	300	0.28	0.30	0.33	0.35
		180	225	0.26	0.28	0.30	0.33
	Wrought Aluminum	30	425	0.30	0.35	0.37	0.40
		180	300	0.28	0.33	0.35	0.37
	Aluminum Bronze	100 - 200	110	0.23	0.26	0.28	0.28
		200 - 250	90	0.19	0.21	0.23	0.26
	Brass	100	200	0.23	0.28	0.30	0.33
	Copper	60	130	0.07	0.07	0.07	0.09

7xD Adjustment Example (0.80 Adjustment)

Data • Adjustment Value	Speed/Feed (7xD)
61 m/min • 0.80	= 48.8 m/min
0.20 mm/rev • 0.80	= 0.16 mm/rev

⚠ WARNING **Tool failure can cause serious injury. To prevent:**

- When using holders without support bushing, use a short GEN3SYS holder to establish an initial hole that is a minimum of 2 diameters deep.
- Do not rotate tool holders more than 50 RPM unless it is engaged with the workpiece or fixture.

Visit **www.alliedmachine.com/DeepHoleGuidelines** for the most up-to-date information and procedures. Factory technical assistance is available for your specific applications through our Application Engineering Team. *ext:* **7611** | *email:* **appeng@alliedmachine.com**

IMPORTANT: The speeds and feeds listed above are a general starting point for all applications. Refer to the coolant recommendation charts for coolant requirements to run at the recommended speeds and feeds. Factory technical assistance is available through our Application Engineering department. For 7xD, 10xD, and 12xD holder lengths, see adjustment example above.

Feed Rate (mm/rev) by Diameter									
15 series 15.00 mm - 15.99 mm	16 series 16.00 mm - 16.99 mm	17 series 17.00 mm - 17.99 mm	18 series 18.00 mm - 19.99 mm	20 series 20.00 mm - 21.99 mm	22 series 22.00 mm - 23.99 mm	24 series 24.00 mm - 25.99 mm	26 series 26.00 mm - 28.99 mm	29 series 29.00 mm - 31.99 mm	32 series 32.00 mm - 35.00 mm
0.16	0.19	0.21	0.23	0.23	0.23	0.26	0.26	0.28	0.28
0.14	0.16	0.19	0.21	0.23	0.23	0.23	0.23	0.26	0.26
0.14	0.14	0.16	0.19	0.21	0.21	0.23	0.23	0.23	0.23
0.16	0.19	0.19	0.21	0.23	0.23	0.23	0.23	0.26	0.26
0.14	0.16	0.19	0.19	0.21	0.21	0.23	0.23	0.23	0.23
0.35	0.37	0.42	0.47	0.47	0.51	0.51	0.56	0.58	0.61
0.33	0.35	0.40	0.44	0.47	0.47	0.51	0.51	0.56	0.56
0.30	0.33	0.37	0.41	0.44	0.47	0.47	0.51	0.51	0.54
0.28	0.30	0.35	0.38	0.41	0.44	0.47	0.47	0.51	0.51
0.26	0.28	0.33	0.35	0.38	0.41	0.44	0.47	0.47	0.49
0.37	0.40	0.46	0.49	0.51	0.54	0.56	0.58	0.61	0.63
0.35	0.37	0.42	0.47	0.49	0.51	0.54	0.56	0.58	0.61
0.33	0.35	0.40	0.47	0.47	0.49	0.51	0.54	0.56	0.58
0.30	0.33	0.37	0.42	0.44	0.47	0.49	0.51	0.54	0.56
0.30	0.33	0.35	0.40	0.41	0.44	0.47	0.49	0.51	0.54
0.37	0.40	0.42	0.44	0.47	0.49	0.51	0.54	0.56	0.58
0.35	0.37	0.40	0.41	0.44	0.47	0.49	0.51	0.54	0.54
0.42	0.44	0.47	0.51	0.54	0.56	0.61	0.63	0.68	0.70
0.40	0.41	0.44	0.49	0.51	0.54	0.58	0.61	0.65	0.68
0.30	0.33	0.35	0.35	0.37	0.40	0.42	0.44	0.44	0.44
0.28	0.28	0.30	0.33	0.35	0.37	0.40	0.41	0.41	0.41
0.35	0.37	0.40	0.44	0.47	0.51	0.54	0.56	0.61	0.61
0.12	0.14	0.14	0.16	0.19	0.19	0.19	0.23	0.23	0.26

Coolant Recommendations

	3xD, 5xD		7xD		10xD, 12xD	
Series	Pressure BAR	Flow Rate LPM	Pressure BAR	Flow Rate LPM	Pressure BAR	Flow Rate LPM
11	31	19	41	30	55	38
12	31	19	41	30	55	38
13	28	23	34	36	52	45
14	28	26	34	36	52	45
15	26	26	33	42	48	53
16	26	30	33	45	48	57
17	24	30	31	47	45	62
18	24	34	31	47	45	62
20	21	38	28	49	41	68
22	21	42	28	53	41	68
24	21	42	28	53	41	68
26	21	45	28	61	41	76
29	21	45	28	61	41	76
32	21	45	28	61	41	76

Tap Drill Information and Formulas | Imperial (inch)

American - Unified Inch Screw Thread

Tap Size	Tap Drill Size	Decimal Equivalent	* Theo % Thread	Probable Mean Oversize	Probable Hole Size	** Probable % Thread
1/2 - 20	29/64	0.4531	72%	0.003	0.4561	68%
9/16 - 12	12.0 mm	0.4724	72%	0.003	0.4754	69%
	31/64	0.4844	83%	0.003	0.4874	80%
9/16 - 18	1/2	0.5000	87%	0.003	0.5030	82%
	13.0 mm	0.5118	70%	0.003	0.5148	66%
	31/64	0.5156	65%	0.003	0.5186	61%
5/8 - 11	17/32	0.5313	79%	0.003	0.5343	77%
5/8 - 12	35/64	0.5469	72%	0.003	0.5499	69%
5/8 - 18	9/16	0.5625	87%	0.003	0.5655	82%
	14.5 mm	0.5709	75%	0.003	0.5739	71%
	37/64	0.5781	65%	0.003	0.5811	61%
11/16 - 12	39/64	0.6094	72%	0.003	0.6124	69%
3/4 - 10	41/64	0.6406	84%	0.003	0.6436	82%
	16.5 mm	0.6496	77%	0.003	0.6526	75%
	21/32	0.6563	72%	0.003	0.6593	70%
3/4 - 12	43/64	0.6719	72%	0.003	0.6749	69%
3/4 - 16	11/16	0.6875	77%	0.003	0.6905	73%
	17.5 mm	0.6890	75%	0.003	0.6920	71%
7/8 - 9	49/64	0.7656	76%	0.003	0.7686	74%
	25/32	0.7813	65%	0.003	0.7843	63%
7/8 - 14	51/64	0.7969	84%	0.003	0.7999	81%
	13/16	0.8125	67%	0.003	0.8155	64%
15/16 - 12	55/64	0.8594	72%	0.003	0.8624	69%
15/16 - 20	57/64	0.8906	72%	0.003	0.8936	68%
1 - 8	22.0 mm	0.8661	82%	0.003	0.8691	81%
	7/8	0.8750	77%	0.003	0.8780	75%
	57/64	0.8906	67%	0.003	0.8936	65%
1 - 12	29/32	0.9063	87%	0.003	0.9093	84%
	59/64	0.9219	72%	0.003	0.9249	69%
1 - 14	15/16	0.9375	67%	0.003	0.9405	64%
1-1/8 - 12	1-1/32	1.0313	87%	0.003	1.0343	84%
	1-3/64	1.0469	72%	0.003	1.0499	69%
1-1/4 - 7	1-7/64	1.1094	76%	0.003	1.1124	74%

Formulas

1. **RPM = (3.82 • SFM) / DIA**
   where:
   RPM = revolutions per minute (rev/min)
   SFM = speed (ft/min)
   DIA = diameter of drill (inch)

2. **IPM = RPM • IPR**
   where:
   IPM = inches per minute (in/min)
   RPM = revolutions per minute (rev/min)
   IPR = feed rate (in/rev)

3. **SFM = RPM • 0.262 • DIA**
   where:
   SFM = speed (ft/min)
   RPM = revolutions per minute (rev/min)
   DIA = diameter of drill (inch)

4. **Thrust = 153,700 • IPR • DIA • K^m**
   where:
   Thrust = axial thrust (lbs)
   IPR = feed rate (in/rev)
   DIA = diameter of drill (inch)
   K_m = specific cutting energy (lbs/in^2)

5. **Tool Power = .6991 • IPR • RPM • K_m • DIA^2**
   where:
   Tool Power = tool power (HP)
   IPR = feed rate (in/rev)
   RPM = revolutions per minute (rev/min)
   K_m = specific cutting energy (lbs/in^2)
   DIA = diameter of drill (inch)

Taper Pipe Thread (NPT)

Tap Size	Tap Drill Size	Decimal Equivalent	* Theo % Thread	Probable Mean Oversize	Probable Hole Size	** Probable % Thread
1/4 - 18	7/16	0.4375	–	0.003	0.4405	–
3/8 - 18	9/16	0.5625	–	0.003	0.5655	–
1/2 - 14	45/64	0.7031	–	0.003	0.7061	–
3/4 - 14	29/32	0.9063	–	0.003	0.9093	–

* Based on nominal tap drill diameter
** Based on 0.003" probable mean oversize

To calculate the percent of full thread for a given hole diameter:

$$\text{\% Thread} = \text{\# of threads per inch} \bullet \frac{\text{(Basic major diameter of thread - Drill hole size)}}{.0130}$$

Material Constants

Type of Material	Hardness	K_m (lbs/in^2)
Plain Carbon and Alloy Steel	85 - 200 BHN	0.79
	200 - 275 BHN	0.94
	275 - 375 BHN	1.00
	375 - 425 BHN	1.15
High-Temperature Alloys	–	1.44
Titanium Alloy	–	0.72
Stainless Steels	135 - 275 BHN	0.94
	30 - 45 RC	1.08
Cast Iron	100 - 200 BHN	0.50
	200 - 300 BHN	1.08
Copper Alloy	20 - 80 RB	0.43
	80 - 100 RB	0.72
Aluminum Alloy	–	0.22
Magnesium Alloy	–	0.16

Notes

- The above tap drill information represents probable thread percentages for the standard tap drills stocked at Allied Machine. Special insert diameters may be required in order to meet a user-specific percentage of thread requirement.
- The 0.003" probable mean oversize hole condition is based on optimum cutting conditions. Probable percent of full thread may vary based on less ideal cutting conditions.
- The table and equations on this page are found in the *Machinery's Handbook*. Permission to simplify and print the equations is granted by the editor of the *Machinery's Handbook*.

Tap Drill Information and Formulas | Metric (mm)

Tap Size	Tap Drill Size	Decimal Equivalent (inch)	* Theo % Thread	Probable Mean Oversize	Probable Hole Size	** Probable % Thread
12 X 1.25	27/64	0.4219	79%	0.075 mm	10.79 mm	74%
	10.8 mm	0.4252	74%	0.075 mm	10.88 mm	69%
14 X 2.0	15/32	0.4688	81%	0.075 mm	11.98 mm	78%
	12.0 mm	0.4724	77%	0.075 mm	12.08 mm	74%
14 X 1.5	12.5 mm	0.4921	77%	0.075 mm	12.58 mm	73%
16 X 2.0	14.0 mm	0.5512	77%	0.075 mm	14.08 mm	74%
16 X 1.5	14.5 mm	0.5709	77%	0.075 mm	14.58 mm	73%
	37/64	0.5781	68%	0.075 mm	14.76 mm	64%
18 X 2.5	15.5 mm	0.6102	77%	0.075 mm	15.58 mm	75%
18 X 1.5	16.5 mm	0.6496	77%	0.075 mm	16.58 mm	73%
	21/32	0.6563	68%	0.075 mm	16.75 mm	64%
20 X 2.5	11/16	0.6875	78%	0.075 mm	17.54 mm	76%
	17.5 mm	0.6890	77%	0.075 mm	17.58 mm	74%
20 X 1.5	18.5 mm	0.7283	77%	0.075 mm	18.58 mm	73%
	47/64	0.7344	69%	0.075 mm	18.66 mm	65%
22 X 2.5	49/64	0.7656	79%	0.075 mm	19.52 mm	76%
	19.5 mm	0.7677	77%	0.075 mm	19.58 mm	75%
22 X 1.5	20.5 mm	0.8071	77%	0.075 mm	20.58 mm	73%
	13/16	0.8125	70%	0.075 mm	20.71 mm	66%
24 X 3	13/16	0.8125	86%	0.075 mm	20.71 mm	84%
	21.0 mm	0.8268	76%	0.075 mm	21.08 mm	75%
24 X 2	22.0 mm	0.8661	77%	0.075 mm	22.08 mm	74%
	7/8	0.8750	68%	0.075 mm	22.30 mm	65%
27 X 3	24.0 mm	0.9449	77%	0.075 mm	24.08 mm	75%

Formulas

1. **RPM = (318.47 • m/min) / DIA**

   where:
   - RPM = revolutions per minute (rev/min)
   - m/min = speed (m/min)
   - DIA = diameter of drill (mm)

2. **mm/min = RPM • mm/rev**

   where:
   - mm/min = millimeter per minute (mm/min)
   - RPM = revolutions per minute (rev/min)
   - mm/rev = feed rate (mm/rev)

3. **m/min = RPM • 0.003 • DIA**

   where:
   - m/min = speed (m/min)
   - RPM = revolutions per minute (rev/min)
   - DIA = diameter of drill (mm)

4. **Thrust = 154 • (mm/rev) • DIA • K_m**

   where:
   - Thrust = axial thrust (N)
   - mm/rev = feed rate (mm/rev)
   - DIA = diameter of drill (mm)
   - K_m = specific cutting energy (kPa)

5. **Tool Power = ((mm/rev) • RPM • K_m • DIA^2) / 218604.8**

   where:
   - Tool Power = tool power (HP)
   - mm/rev = feed rate (mm/rev)
   - RPM = revolutions per minute (rev/min)
   - K_m = specific cutting energy (kPa)
   - DIA = diameter of drill (mm)

BSP and ISO 7-1

Tap Size	Tap Drill Size	Decimal Equivalent	* Theo % Thread	Probable Mean Oversize	Probable Hole Size	** Probable % Thread
1/4-19	7/16"	0.4375"	–	0.075 mm	11.19 mm	–
3/8-19	37/64"	0.5781"	–	0.075 mm	14.76 mm	–
1/2-14	23/32"	0.7188"	–	0.075 mm	18.33 mm	–
3/4-14	15/16"	0.9375"	–	0.075 mm	23.89 mm	–

* Based on nominal tap drill diameter
** Based on 0.075 mm probable mean oversize

To calculate the percent of full thread for a given hole diameter:

$$\text{\% Thread} = \frac{76.93}{\text{Pitch (mm)}} \cdot (\text{Basic major diameter - Drill hole size})$$

Material Constants

Type of Material	Hardness	K_m (kPa)
Plain Carbon and Alloy Steel	85 - 200 BHN	5.45
	200 - 275 BHN	6.48
	275 - 375 BHN	6.89
	375 - 425 BHN	7.93
High-Temperature Alloys	–	9.93
Titanium Alloy	–	4.96
Stainless Steels	135 - 275 BHN	6.48
	30 - 45 RC	7.45
Cast Iron	100 - 200 BHN	3.45
	200 - 300 BHN	7.45
Copper Alloy	20 - 80 RB	2.96
	80 - 100 RB	4.96
Aluminum Alloy	–	1.52
Magnesium Alloy	–	1.10

Notes

- The above tap drill information represents probable thread percentages for the standard tap drills stocked at Allied Machine. Special insert diameters may be required in order to meet a user specific percentage of thread requirement.
- The 0.075 mm probable mean oversize hole condition is based on optimum cutting conditions. Probable percent of full thread may vary based on less ideal cutting conditions.
- The table and equations on this page are found in the *Machinery's Handbook*. Permission to simplify and print the equations is granted by the editor of the *Machinery's Handbook*.

Deep Hole Drilling Guidelines

GEN3SYS XT Pro | 10xD and 12xD Holders

1. Pilot Hole
100 % RPM
100% IPR (mm/rev)

Establish the pilot hole using the same diameter short drill to a depth of 2xD minimum.
Utilize a pilot drill with the same or larger included point angle.

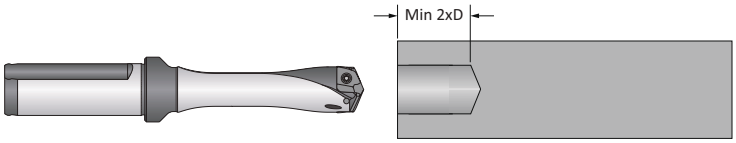

Coolant ON

2. Feed-in
50 RPM max
12 IPM (300 mm/min)

Feed the longer drill within 1/16" (1.5 mm) short of the established pilot hole bottom at a **maximum of 50 RPM** and 12 IPM (300 mm/min) feed rate.

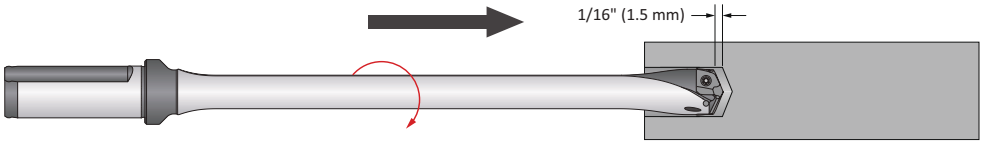

Coolant OFF

3. Deep Hole Transition Drilling
50 % RPM
75% IPR (mm/rev)

Drill additional 1xD past the bottom of the pilot hole at 50% reduction of recommended speed and 25% reduction of recommended feed.
Minimum of 1 second dwell is required to meet full speed before feeding.

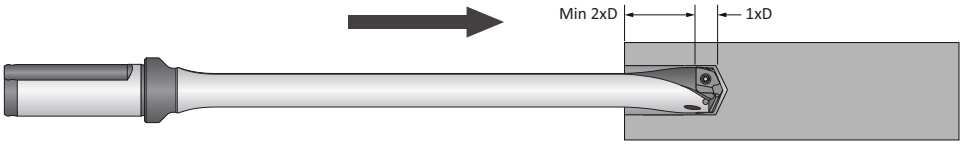

Coolant ON

4. Deep Hole Drilling - Blind
100% RPM
100% IPR (mm/rev)

Drill to full depth at recommended speed and feed for longer drill according to Allied speed and feed charts.
No peck cycle recommended.

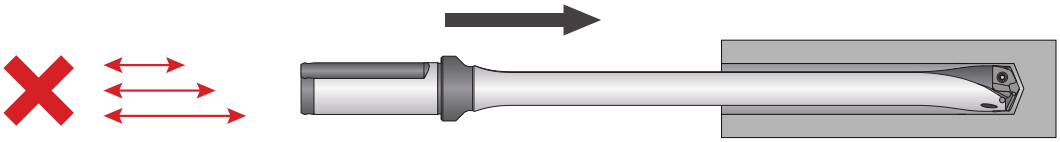

Coolant ON

5. Deep Hole Drilling - at Breakout
50% RPM
75% IPR (mm/rev)

For through holes only:
Reduce speed by 50% and feed by 25% prior to breakout.
Do not break out more than 1/8" (3 mm) past the full diameter of the drill.

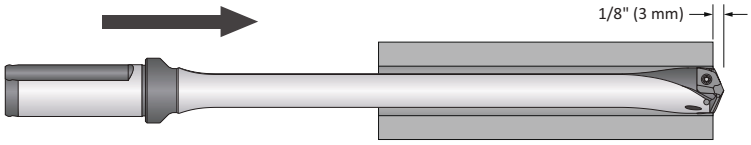

Coolant ON

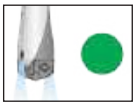

6. Drill Retract
50 RPM max

Reduce speed to a **maximum of 50 RPM** before retracting from the hole.

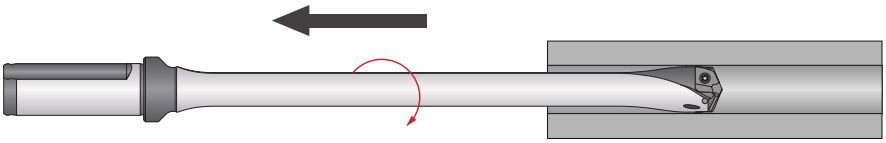

Coolant OFF

⚠ WARNING **Tool failure can cause serious injury. To prevent:**
- When using holders without support bushing, use a short GEN3SYS holder to establish an initial hole that is a minimum of 2 diameters deep.
- Do not rotate tool holders more than 50 RPM unless it is engaged with the workpiece or fixture.

Visit **www.alliedmachine.com/DeepHoleGuidelines** for the most up-to-date information and procedures. Factory technical assistance is available for your specific applications through our Application Engineering Team. *ext:* **7611** | *email:* **appeng@alliedmachine.com**

Troubleshooting Guide

	Potential Problem																			
	Accelerated corner wear	Barber pole	Bell-mouth hole	Insert chipping	Blue chips	Built-up Edge (BUE)	Chatter	Chip packing	Chipping of point	Damaged or broken tools	Excessive margin wear	High flank wear	Hole lead off	Hole out of position	Hole out of round	Oversize hole	Poor hole finish	Poor tool life	Power spikes - Load meter	
Setup Condition	1	2	3	4	5	6	7	8	9	10	11	12	13	14	15	16	17	18	19	**Possible Solutions**
Worn or misaligned spindle (lathe, screw machine, chucker)	1	2	3				7		9	10	11		13			16	17			• Align spindle and turret or tailstock. • Repair spindle.
Use of low rigidity machine tools		2	3	4			7		9	10			13	14						• Reduce penetration rate to fall within the physical limits of the machine or setup (**NOTICE:** Do not reduce feed below threshold of good chip formation).
Poor workpiece support		2		4			7			10	11				15		17			• Provide additional support for the workpiece. • Reduce penetration rate to fall within the physical limits of the machine or setup (**NOTICE:** Do not reduce feed below threshold of good chip formation).
Flood coolant, low coolant pressure, or low coolant volume	1				5	6		8		10		12				16	17	18	19	• Run coolant through tool holder when drilling greater than 1xD. • Increase coolant pressure and volume through the tool holder. • Reduce penetration rate to fall within the coolant limitations (**NOTICE:** Do not reduce feed below threshold of good chip formation). • Add a peck cycle to help clear chips.
Interrupted cuts. Entry or exit surfaces that are not perpendicular to the spindle (draft angles, parting lines, curved or stepped surfaces, cross holes, and cast or forged surfaces)				4			7		9	10	11		13	14	15	16	17	18		• Premill (spot face) entry or exit surface to remove interruption. • Decrease feed as much as 50% through entry or exit interruption. • Use short holders in low impact entry cuts.
Material harder than expected or running tools beyond recommended speed	1				5	6				10		12						18		• Reduce speed. • Increase coolant pressure and volume. • Improve coolant condition by use of quality products and regular maintenance.
Poor material micro-structure or foreign particles (forgings and castings that have not been normalized or annealed, poorly prepared steel, flame cut parts, and sand casting)				4		6				10		12	13					18		• Compare performance of other tools for similar wear problems, which may indicate poor micro-structure. Anneal or normalize parts to improve micro-structure for machining. • Reduce feeds (**NOTICE:** Do not reduce feed below threshold of good chip formation).
Poor chip control								8		10	11		13			16	17	18	19	• Increase feed to recommended levels. Contact Allied's Application Engineering group for technical recommendations. • Increase coolant pressure and volume. • Improve coolant condition by use of quality products and regular maintenance.
Spot drilled holes with included angle less than that matching GEN3SYS XT or cored holes	1			4			7						13					18		• Spot hole with short tool of same or greater included angle as GEN3SYS XT drill insert. • Reduce feed (**NOTICE:** Do not reduce feed below threshold of good chip formation). If possible, drill from solid.

SECTION

A25

T-A Pro®

T-A Pro®

High Penetration Replaceable Insert Drilling System

- **Diameter Range:** 0.3739" - 1.8820" (9.50 mm - 47.80 mm)

The best just got *better*.

After 35 years of spade drilling success with our iconic T-A® (Throw Away) insert, the best just got better. Our team of engineers developed technology that takes THE "go-to" solution for general purpose holemaking to a performance level previously unachievable by a spade insert.

The T-A Pro combines material-specific insert geometries, a redesigned drill body, and a proprietary coolant-through system to allow penetration rates, which run at speeds faster than other high performance drills.

Excellent chip control.	Improves hole quality and surface finish.	Provides maximum durability and stability.

Applicable Industries

Aerospace · Agriculture · Automotive · Firearms · General Machining · Oil & Gas · Renewable Energy

Your safety and the safety of others is very important. This catalog contains important safety messages. Always read and follow all safety precautions.

This triangle is a safety hazard symbol. It alerts you to potential safety hazards that can cause tool failure and serious injury.

When you see this symbol in the catalog, look for a related safety message that may be near this triangle or referred to in the nearby text.

There are safety signal words also used in the catalog. Safety messages follow these words.

WARNING

WARNING (shown above) means that failure to follow the precautions in this message could result in tool failure and serious injury.

NOTICE means that failure to follow the precautions in this message could result in damage to the tool or machine but not result in personal injury.

NOTE and **IMPORTANT** are also used. These are important that you read and follow but are not safety-related.

Visit www.alliedmachine.com for the most up-to-date information and procedures.

Reference Icons
The following icons will appear throughout the catalog to help you navigate between products.

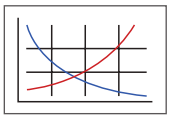

Recommended Cutting Data
Speed and feed recommendations for optimum and safe drilling

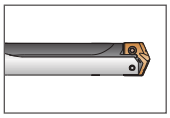

T-A Pro Holders
Refers to the range of holders that connect with the corresponding inserts

T-A Pro Inserts
Refers to ISO-material special coated carbide inserts and HSS inserts that connect with the corresponding holders

Coolant-Through Option
Indicates that the product is coolant through

Series	Diameter Range	
	Imperial (inch)	Metric (mm)
Y	0.3739" - 0.4368"	9.50 mm - 11.09 mm
Z	0.4369" - 0.4998"	11.10 mm - 12.69 mm
0	0.4999" - 0.6946"	12.70 mm - 17.64 mm
1	0.6947" - 0.9596"	17.65 mm - 24.37 mm
2	0.9597" - 1.3797"	24.38 mm - 35.04 mm
3	1.3798" - 1.8820"	35.05 mm - 47.80 mm

T-A Pro® Drilling System Contents

Introduction Information

Competitive Test Results 3
Case Studies . . . . . 4 - 5
Insert Comparison and Assembly Information 6
T-A Pro Drilling System Information 7
Product Nomenclature . . . . . 8 - 9

Y Series
Inserts . . . . . 10 - 11
Drill Holders . . . . . 12 - 13

Z Series
Inserts . . . . . 14 - 15
Drill Holders . . . . . 16 - 17

0 Series
Inserts . . . . . 18 - 19
Drill Holders . . . . . 20 - 23

1 Series
Inserts . . . . . 24 - 27
Drill Holders . . . . . 28 - 31

2 Series
Inserts . . . . . 32 - 35
Drill Holders . . . . . 36 - 39

3 Series
Inserts . . . . . 40 - 43
Drill Holders . . . . . 44 - 47

T-A Pro Kits
Drill Holders 48
Inserts 49

Recommended Cutting Data
Imperial (inch) — Carbide . . . . . 50 - 51
Imperial (inch) — High-Speed Steel . . . . . 52 - 53
Metric (mm) — Carbide . . . . . 54 - 55
Metric (mm) — High-Speed Steel . . . . . 56 - 57

Tap Drill Information and Formulas
Imperial (inch) 58
Metric (mm) 59

Deep Hole Drilling Guidelines 60

Troubleshooting Guide 61

T-A *Pro*®

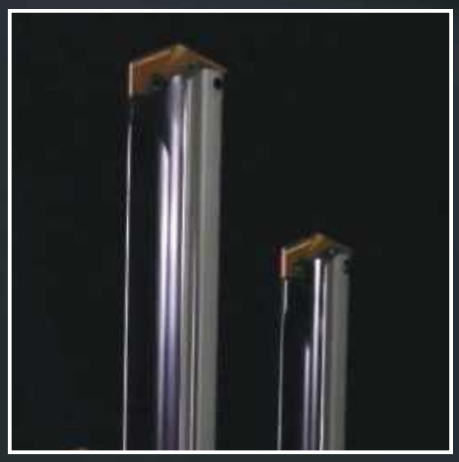

NEW HOLDER DESIGN

Optimized flute design for ***increased* chip evacuation.**

NEW INSERT DESIGN

ISO-specific geometries with a new point design to ***simplify*** your insert choices.

NEW COOLANT DESIGN

Proprietary coolant outlet configuration provides ***superior*** performance **even in low coolant applications (200 PSI).**

Competitive Test Results

T-A *Pro*®

TEST RESULTS

Project Profile:	Competitive Testing in 4340 Steel
Tooling Solution:	T-A Pro: Steel (P) Geometry with T-A Pro Holder

The Parameters:

- Hole Diameter = 0.5625" (14.30 mm)
- Depth of Cut = 2" (50.80 mm)
- Coolant = 300 PSI
- Speed = 2546 RPM
- Feed = 16.55 inch/min (420 mm/min)

The Results:

When run at the listed parameters, here is how the three different tooling solutions performed:

Competitor 1	= 3148 total linear inches
Competitor 2	= 3688 total linear inches
T-A Pro	= **4316** total linear inches

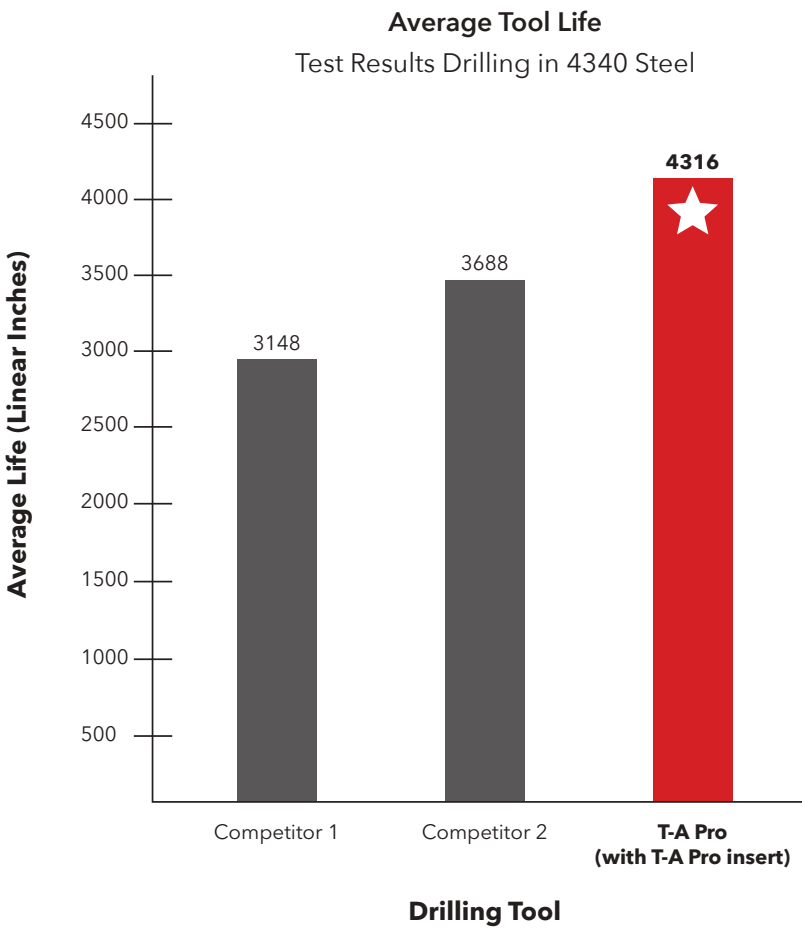

Case Study

The Gift that Keeps Giving.

Not everything in life has to be a give and take. Our customer who machines fluid end frac blocks was previously having to reduce cutting parameters to achieve good chip formation and produce a successful part.

Needing better chip formation with a reduced cycle time, the customer tested Allied's ***T-A Pro drill***. Using the "M" ISO-specific stainless steel insert geometry—developed for improved chip formation while minimizing exit burr—they were able to increase their speed and feed while maintaining ideal chip formation.

On top of the reduced cycle time, the T-A Pro had a increase tool life lowering the cost per hole by 58.82%. The success of the T-A Pro in this application is just another example of why the T-A Pro is more than just a good drill.

If you are looking for a solution that just keeps giving, ***give us a call, and we will help you find the right solution.***

Product:	T-A Pro drill
Objective:	Reduce cycle time
Industry:	Oil & gas/ Petrochemical
Part:	Fluid end frac block
Material:	15-5 PH stainless steel
Hole Ø:	1.75" *(44.45 mm)*
Hole Depth:	20.00" *(508.00 mm)*
Tolerance:	+/- 0.005" *(0.127 mm)*
Required Surface Finish:	125 Ra µin *(3.2 µm)*

Measure	Competitor Drill	T-A Pro Drill
RPM	480	545
Speed Rate	220 SFM *(67.06 m/min)*	250 SFM *(76.20 m/min)*
Feed Rate	0.005 IPR *(0.13 mm/rev)*	0.008 IPR *(0.20 mm/rev)*
Penetration Rate	2.4 IPM *(60.96 mm/min)*	4.4 IPM *(111.76 mm/min)*
Total Part Cycle Time	500 sec	272 sec
Tool Life	30 holes	60 holes
T-A Pro offered ***58.82%*** cost per hole savings over the competitor tooling.		

- T-A Pro holder
  Item No. HTA3D15-150F
- T-A Pro insert
  M geometry (stainless steel)
  Item No. TAM3-44.45

45.60%
cycle time decrease

The ISO-specific AM460 coated T-A Pro insert provided:

- ✓ Increased tool life.
- ✓ Decreased cycle time.
- ✓ Decreased cost per hole.
- ✓ Increased penetration rate.

Case Study

Need a solution with better tool life?

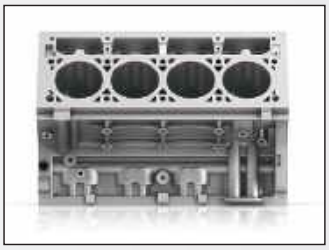

Our customer was machining engine block parts from ductile cast iron in a production cell. The replaceable tip drill they were using wasn't providing the results they needed, so they began searching for a tooling solution that would decrease machine downtime and increase productivity.

The customer tested the **T-A Pro® high penetration replaceable insert drill** using the "K" (cast iron) geometry insert with Allied's multilayer TiAlN coating that provides increased abrasion resistance and tool life. The T-A Pro performed better than the customer had hoped.

Using the T-A Pro not only provided substantial tool life improvements, but it also improved the penetration rate. The previous tooling had a tool life of 1700 holes, but the T-A Pro increased that life to 3400 holes. The T-A Pro also increased penetration rates by 30%. This allowed the customer to increase their productivity.

The bottom line: Our customer was able to save $60k in tool savings per year with massive improvements in throughput. The advantage of the T-A Pro allowed our customer to achieve their tooling goals.

Product: T-A Pro
Objectives: (1) Decrease machine downtime (2) Increase productivity
Industry: Automotive
Part: Engine block
Material: Ductile cast iron
Hole Ø: 0.6299" *(16.00 mm)*
Hole Depth: 9.50" *(241.00 mm)*

Measure	Competitor Replaceable Insert Drill	T-A Pro Drill
RPM	1819 RPM	2092 RPM
Speed	300 SFM *(91 m/min)*	345 SFM *(105 m/min)*
Feed Rate	0.008 IPR *(0.20 mm/rev)*	0.0092 IPR *(0.23 mm/rev)*
Penetration Rate	14.55 IPM *(369.57 mm/min)*	19.25 IPM *(488.95 mm/min)*
Cycle Time	39 seconds	29 seconds
Tool Life	1700 holes	3400 holes

- T-A Pro Drill holder
  15xD length
  Item No. HTA0C15-075C
- T- A Pro Drill inserts
  K geometry
  (cast iron)
  Item No. TAK0-16.00

The cast iron TiAlN coated T-A Pro insert provided:

- ✓ **Doubled tool life.**
- ✓ **Decreased machine downtime.**
- ✓ **Increased productivity.**
- ✓ **30% increased penetration rate.**
- ✓ **Increased tool savings per year.**

Insert Comparison and Assembly Information

		T-A Pro® Inserts	GEN2 T-A® Inserts	T-A® Inserts
Recommended for increased productivity.		✓		
ISO-specific geometry/coating combination.	P N K M	✓		
Connects with T-A Pro holders.		✓	✓	✓
Connects with T-A holders.		✓	✓	✓

Step 1:
Align the flats on the T-A Pro insert with the flats on the ears of the holder.

Step 2:
Slide the insert into the precision ground locating pocket on the holder. The insert should not be turned, rotated, or twisted for locking purposes. The holder pocket and locating pads on the insert assure optimum fit and repeatability.

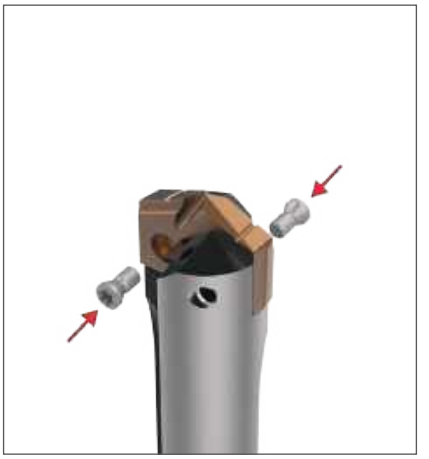

Step 3:
Apply a generous amount of E-Z Break® (provided in the packaging) onto the supplied TORX® Plus screws.

Tighten the TORX Plus screws to the recommended torque value specified in the catalog by series. A preset torx driver is available to assure that the proper torque is applied.

T-A Pro Drilling System Information

T-A Pro Drill Inserts

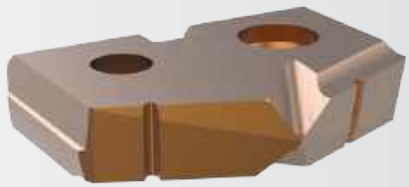

Advanced Design Capabilities

The advanced T-A Pro insert combines a coating and geometry specifically designed to achieve optimal results in ISO material drilling applications. With quick connectivity to existing T-A drill insert holders, the T-A Pro insert can be interchanged with previous T-A inserts with ease, resulting in minimal setup times so you can immediately increase your productivity.

T-A Pro inserts connect with:

T-A Pro holders

T-A holders

Carbide Geometries

P - Steels

- Designed to provide increased penetration rates and tool life in steel applications.
- Superior geometry and edge provides excellent chip control.
- Allied's multilayer AM300® coating increases heat resistance and improves tool life.

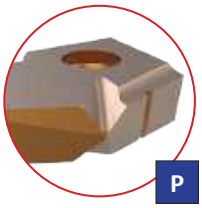

K - Cast Irons

- Uniquely designed for cast/ductile iron applications.
- Geometry developed for maximum tool life, reduced exit burr, and improved hole finish.
- Allied's multilayer TiAlN coating provides increased abrasion resistance and tool life.

N - Nonferrous Materials

- Designed for applications in aluminum, brass, and copper.
- The geometry yields excellent chip control in these softer materials.
- TiCN coating gives the versatility to run in a variety of materials while reducing buildup.

M - Stainless Steel*

- Designed for all stainless steels and heat-resistant superalloys.
- Geometry optimized for improved chip formation while minimizing exit burr.
- Allied's new AM460 coating provides industry-leading tool life in stainless and HRSA materials.

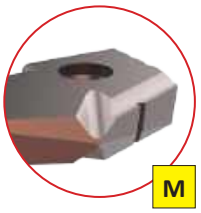

*Available in Z -3 series only.

High-Speed Steel Geometries

X - High-Speed Steel Materials

- Improved chip geometry for excellent chip control in all materials.
- Long tool life and high-process security for the most challenging applications.
- Allied's multilayer AM200® coating combines excellent heat resistance and high lubricity for wide application use.

T-A Pro Drill Holders

			Stub, 3xD, 5xD, 7xD, 10xD, 12xD, 15xD
Straight flutes.	Proprietary coolant outlets improve coolant flow.	Provides increased insert life.	Available in Stub, 3xD, 5xD, 7xD, 10xD, 12xD, and 15xD.

Product Nomenclature

T-A Pro Drill Inserts

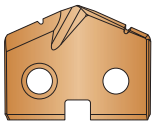

TA	P	0	–	15.00
1	2	3		4

1. T-A Pro Drill Insert	2. ISO Material / Geometry	3. Series	4. Diameter (mm)
TA = T-A Pro insert	**P** = Steel **K** = Cast iron **N** = Nonferrous **M** = Stainless Steel* **X** = HSS	**Y** = Y series **Z** = Z series **0** = 0 series **1** = 1 series **2** = 2 series **3** = 3 series	For complete list of diameter ranges by series, see contents page.

*Available in Z -3 series only.

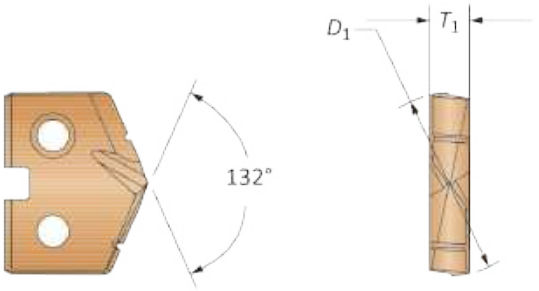

Reference Key

Symbol	Attribute
D_1	Insert diameter
T_1	Insert thickness

Product Nomenclature

T-A Pro Drill Holders

HTA	0	B	05	–	20	FM
1	2	3	4		5	6

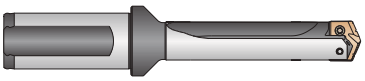

1. Holder	2. Series	3. Body Diameter	4. Length
HTA = T-A Pro holder	**Y** = Y Series	**A** = A body diameter	**01** = Stub Length
	Z = Z Series	**B** = B body diameter	**03** = 3x Diameter
	0 = 0 Series	**C** = C body diameter	**05** = 5x Diameter
	1 = 1 Series	**D** = D body diameter	**07** = 7x Diameter
	2 = 2 Series		**10** = 10x Diameter
	3 = 3 Series		**12** = 12x Diameter
			15 = 15x Diameter

5. Shank Diameter	
Imperial (inch)	**Metric (mm)**
075 = 3/4"	**20** = 20 mm
100 = 1"	**25** = 25 mm
125 = 1-1/4"	**32** = 32 mm
150 = 1-1/2"	**40** = 40 mm

6. Shank Style
F = Flanged with flat
FM = Flanged metric with flat
C = Cylindrical (no flat)
CM = Cylindrical metric (no flat)

Holder Ordering Information

The series designator (Z series, 0 series, etc.) in the top corner of each page is for your reference when ordering. Please refer to these series designators when placing an order. For example, a Z series drill insert only fits into a Z series holder.

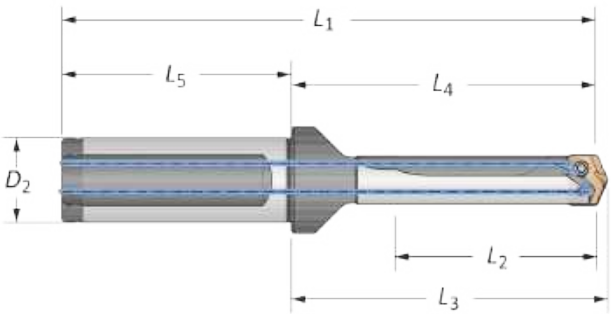

Reference Key

Symbol	Attribute
D_2	Shank diameter
L_1	Overall length
L_2	Drill depth
L_3	Holder reference length
L_4	Holder body length
L_5	Shank length

T-A Pro Drill Inserts

Y Series | Diameter Range: 0.3739" - 0.4368" (9.50 mm - 11.09 mm)

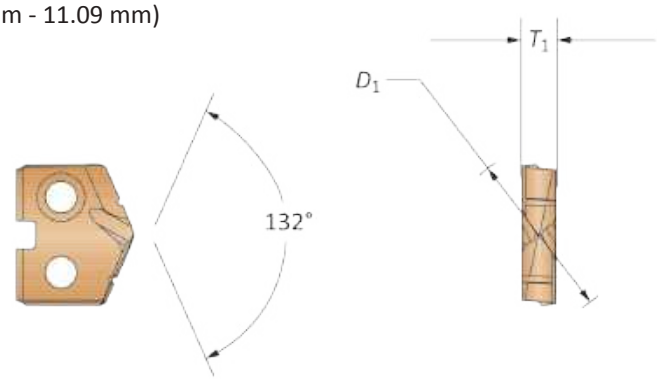

Insert					Carbide			HSS
					Part No.	Part No.	Part No.	Part No.
Series	Fractional Equivalent	D_1 inch	D_1 mm	T_1	P	K	N	X
Y-A	—	0.3740	9.50	3/32	**TAPY-9.50**	**TAKY-9.50**	**TANY-9.50**	**TAXY-9.50**
Y-A	3/8	0.3752	9.53	3/32	**TAPY-9.53**	**TAKY-9.53**	**TANY-9.53**	**TAXY-9.53**
Y-A	—	0.3780	9.60	3/32	**TAPY-9.60**	**TAKY-9.60**	**TANY-9.60**	**TAXY-9.60**
Y-A	—	0.3819	9.70	3/32	**TAPY-9.70**	**TAKY-9.70**	**TANY-9.70**	**TAXY-9.70**
Y-A	—	0.3858	9.80	3/32	**TAPY-9.80**	**TAKY-9.80**	**TANY-9.80**	**TAXY-9.80**
Y-A	—	0.3898	9.90	3/32	**TAPY-9.90**	**TAKY-9.90**	**TANY-9.90**	**TAXY-9.90**
Y-A	25/64	0.3906	9.92	3/32	**TAPY-9.92**	**TAKY-9.92**	**TANY-9.92**	**TAXY-9.92**
Y-A	—	0.3937	10.00	3/32	**TAPY-10.00**	**TAKY-10.00**	**TANY-10.00**	**TAXY-10.00**
Y-A	—	0.3976	10.10	3/32	**TAPY-10.10**	**TAKY-10.10**	**TANY-10.10**	**TAXY-10.10**
Y-A	—	0.4016	10.20	3/32	**TAPY-10.20**	**TAKY-10.20**	**TANY-10.20**	**TAXY-10.20**
Y-A	—	0.4055	10.30	3/32	**TAPY-10.30**	**TAKY-10.30**	**TANY-10.30**	**TAXY-10.30**

Inserts sold in multiples of 2.

Sub Series Holders (A, B, C, D)

Sub series holders are recommended when running carbide inserts toward the upper end of the series drill range, as well as in tougher applications requiring more insert support and holder strength. **NOTE:** Only specified sub series inserts should be used with equivalent or smaller sub series holders.

A Series Insert + A Series Holder

C Series Insert + A Series Holder

C Series Insert + C Series Holder

A Series Insert + C Series Holder

A25: 12 - 13

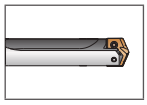

Key on A25: 1

A25: 50 - 57

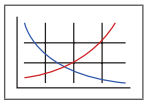

Sizes not shown are available upon request. When ordering, please follow the example below:	
Imperial:	0.5180", steel, 0 series = use Part No. **TAP0-13.16**
Metric:	13.16 mm, steel, 0 series = use Part No. **TAP0-13.16**

T-A Pro Drill Inserts

Y Series | Diameter Range: 0.3739" - 0.4368" (9.50 mm - 11.09 mm)

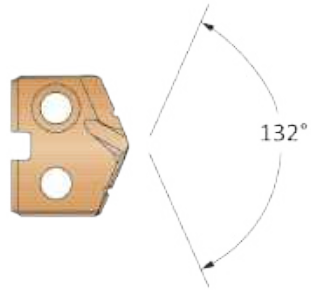

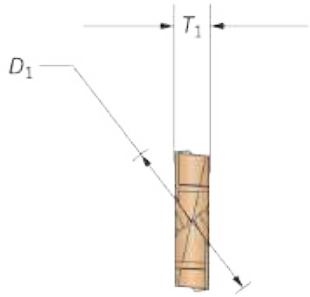

Insert					Carbide			HSS
					Part No.	Part No.	Part No.	Part No.
Series	Fractional Equivalent	D_1 inch	D_1 mm	T_1	P	K	N	X
Y-B	13/32	0.4063	10.32	3/32	TAPY-10.32	TAKY-10.32	TANY-10.32	TAXY-10.32
Y-B	—	0.4094	10.40	3/32	TAPY-10.40	TAKY-10.40	TANY-10.40	TAXY-10.40
Y-B	—	0.4134	10.50	3/32	TAPY-10.50	TAKY-10.50	TANY-10.50	TAXY-10.50
Y-B	—	0.4173	10.60	3/32	TAPY-10.60	TAKY-10.60	TANY-10.60	TAXY-10.60
Y-B	—	0.4213	10.70	3/32	TAPY-10.70	TAKY-10.70	TANY-10.70	TAXY-10.70
Y-B	27/64	0.4220	10.72	3/32	TAPY-10.72	TAKY-10.72	TANY-10.72	TAXY-10.72
Y-B	—	0.4252	10.80	3/32	TAPY-10.80	TAKY-10.80	TANY-10.80	TAXY-10.80
Y-B	—	0.4291	10.90	3/32	TAPY-10.90	TAKY-10.90	TANY-10.90	TAXY-10.90
Y-B	—	0.4331	11.00	3/32	TAPY-11.00	TAKY-11.00	TANY-11.00	TAXY-11.00

Inserts sold in multiples of 2.

Sub Series Holders (A, B, C, D)

Sub series holders are recommended when running carbide inserts toward the upper end of the series drill range, as well as in tougher applications requiring more insert support and holder strength. **NOTE:** Only specified sub series inserts should be used with equivalent or smaller sub series holders.

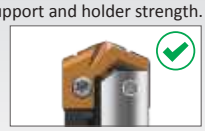

A Series Insert + A Series Holder

C Series Insert + A Series Holder

C Series Insert + C Series Holder

A Series Insert + C Series Holder

A25: 12 - 13

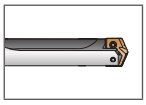

Key on A25: 1

A25: 50 - 57

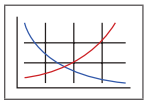

Sizes not shown are available upon request. When ordering, please follow the example below:	
Imperial:	0.5180", steel, 0 series = use Part No. **TAP0-13.16**
Metric:	13.16 mm, steel, 0 series = use Part No. **TAP0-13.16**

T-A Pro Drill Holders

Y Series Imperial | Diameter Range: 0.3739" - 0.4368"

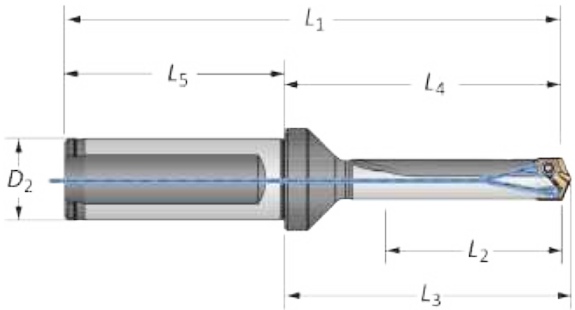

	Body						Shank			
	Length	Sub Series	L_2	L_4	L_3	L_1	L_5	D_2	Flat	Part No.
	Stub	A	0.436	1.554	1.634	3.584	2.030	3/4	Yes	**HTAYA01-075F**
	Stub	A	0.436	1.554	1.634	3.584	2.030	3/4	No	**HTAYA01-075C**
	Stub	B	0.436	1.554	1.634	3.584	2.030	3/4	Yes	**HTAYB01-075F**
	Stub	B	0.436	1.554	1.634	3.584	2.030	3/4	No	**HTAYB01-075C**
	3xD	A	1.308	2.555	2.635	4.585	2.030	3/4	Yes	**HTAYA03-075F**
	3xD	A	1.308	2.555	2.635	4.585	2.030	3/4	No	**HTAYA03-075C**
	3xD	B	1.308	2.555	2.635	4.585	2.030	3/4	Yes	**HTAYB03-075F**
	3xD	B	1.308	2.555	2.635	4.585	2.030	3/4	No	**HTAYB03-075C**
	5xD	A	2.180	3.427	3.507	5.457	2.030	3/4	Yes	**HTAYA05-075F**
	5xD	A	2.180	3.427	3.507	5.457	2.030	3/4	No	**HTAYA05-075C**
	5xD	B	2.180	3.427	3.507	5.457	2.030	3/4	Yes	**HTAYB05-075F**
	5xD	B	2.180	3.427	3.507	5.457	2.030	3/4	No	**HTAYB05-075C**
	7xD	A	3.052	4.299	4.379	6.329	2.030	3/4	Yes	**HTAYA07-075F**
	7xD	A	3.052	4.299	4.379	6.329	2.030	3/4	No	**HTAYA07-075C**
i	7xD	B	3.052	4.299	4.379	6.329	2.030	3/4	Yes	**HTAYB07-075F**
	7xD	B	3.052	4.299	4.379	6.329	2.030	3/4	No	**HTAYB07-075C**
	10xD	A	4.360	5.607	5.687	7.637	2.030	3/4	Yes	⚠ **HTAYA10-075F**
	10xD	A	4.360	5.607	5.687	7.637	2.030	3/4	No	⚠ **HTAYA10-075C**
	10xD	B	4.360	5.607	5.687	7.637	2.030	3/4	Yes	⚠ **HTAYB10-075F**
	10xD	B	4.360	5.607	5.687	7.637	2.030	3/4	No	⚠ **HTAYB10-075C**
	12xD	A	5.232	6.479	6.559	8.509	2.030	3/4	Yes	⚠ **HTAYA12-075F**
	12xD	A	5.232	6.479	6.559	8.509	2.030	3/4	No	⚠ **HTAYA12-075C**
	12xD	B	5.232	6.479	6.559	8.509	2.030	3/4	Yes	⚠ **HTAYB12-075F**
	12xD	B	5.232	6.479	6.559	8.509	2.030	3/4	No	⚠ **HTAYB12-075C**
	15xD	A	6.540	7.787	7.867	9.817	2.030	3/4	Yes	⚠ **HTAYA15-075F**
	15xD	A	6.540	7.787	7.867	9.817	2.030	3/4	No	⚠ **HTAYA15-075C**
	15xD	B	6.540	7.787	7.867	9.817	2.030	3/4	Yes	⚠ **HTAYB15-075F**
	15xD	B	6.540	7.787	7.867	9.817	2.030	3/4	No	⚠ **HTAYB15-075C**

Sub Series	Y Series Holder Diameter Range	
	Imperial (inch)	Metric (mm)
YA	0.3739" - 0.4368"	9.50 mm - 11.09 mm
YB	0.4062" - 0.4368"	10.32 mm - 11.09 mm

Connection Accessories

Insert Screws	Nylon Locking Screws	Insert Driver	Preset Torque Hand Driver	Replacement Tips	Admissible Tightening Torque*
724-IP7-1	724N-IP7-1	8IP-7	8IP-7TL	8IP-7B	7.4 in-lbs (84 N-cm)

*Tightening torques are calculated with a friction coefficient of μ = 0.14 and develop 90% of ultimate yield strength.

⚠ **WARNING** Refer to Speed and Feed charts for recommended adjustments to speeds and feeds. Refer to page **A25: 60** for deep hole drilling guidelines in this section of the catalog. Visit **www.alliedmachine.com/DeepHoleGuidelines** for the most up-to-date information and procedures. Factory technical assistance is available for your specific applications through our Application Engineering department.
ext: **7611** | *email:* **appeng@alliedmachine.com**

A25: 10 - 11

Key on A25: 1

A25: 50 - 57

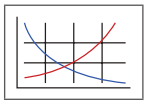

i = Imperial (in)
m = Metric (mm)
Screws sold in multiples of 10.

T-A Pro Drill Holders

Y Series Metric | Diameter Range: 9.50 mm - 11.09 mm

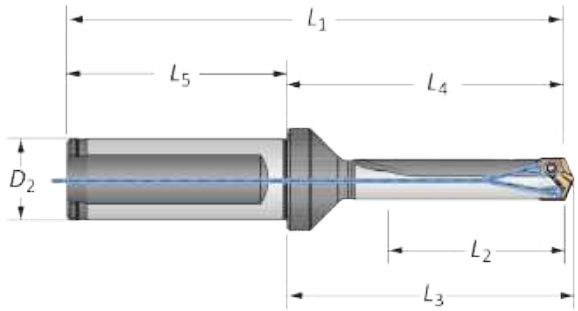

	Body						Shank			
	Length	Sub Series	L_2	L_4	L_3	L_1	L_5	D_2	Flat	Part No.
m	Stub	A	11.1	39.5	41.5	89.5	50.0	20	Yes	HTAYA01-20FM
	Stub	A	11.1	39.5	41.5	89.5	50.0	20	No	HTAYA01-20CM
	Stub	B	11.1	39.5	41.5	89.5	50.0	20	Yes	HTAYB01-20FM
	Stub	B	11.1	39.5	41.5	89.5	50.0	20	No	HTAYB01-20CM
	3xD	A	33.2	64.9	66.9	114.9	50.0	20	Yes	HTAYA03-20FM
	3xD	A	33.2	64.9	66.9	114.9	50.0	20	No	HTAYA03-20CM
	3xD	B	33.2	64.9	66.9	114.9	50.0	20	Yes	HTAYB03-20FM
	3xD	B	33.2	64.9	66.9	114.9	50.0	20	No	HTAYB03-20CM
	5xD	A	55.4	87.0	89.1	137.1	50.0	20	Yes	HTAYA05-20FM
	5xD	A	55.4	87.0	89.1	137.1	50.0	20	No	HTAYA05-20CM
	5xD	B	55.4	87.0	89.1	137.1	50.0	20	Yes	HTAYB05-20FM
	5xD	B	55.4	87.0	89.1	137.1	50.0	20	No	HTAYB05-20CM
	7xD	A	77.5	109.2	111.2	159.2	50.0	20	Yes	HTAYA07-20FM
	7xD	A	77.5	109.2	111.2	159.2	50.0	20	No	HTAYA07-20CM
	7xD	B	77.5	109.2	111.2	159.2	50.0	20	Yes	HTAYB07-20FM
	7xD	B	77.5	109.2	111.2	159.2	50.0	20	No	HTAYB07-20CM
	10xD	A	110.7	142.4	144.4	192.4	50.0	20	Yes	⚠ HTAYA10-20FM
	10xD	A	110.7	142.4	144.4	192.4	50.0	20	No	⚠ HTAYA10-20CM
	10xD	B	110.7	142.4	144.4	192.4	50.0	20	Yes	⚠ HTAYB10-20FM
	10xD	B	110.7	142.4	144.4	192.4	50.0	20	No	⚠ HTAYB10-20CM
	12xD	A	132.9	164.6	166.6	214.6	50.0	20	Yes	⚠ HTAYA12-20FM
	12xD	A	132.9	164.6	166.6	214.6	50.0	20	No	⚠ HTAYA12-20CM
	12xD	B	132.9	164.6	166.6	214.6	50.0	20	Yes	⚠ HTAYB12-20FM
	12xD	B	132.9	164.6	166.6	214.6	50.0	20	No	⚠ HTAYB12-20CM
	15xD	A	166.1	197.8	199.8	247.8	50.0	20	Yes	⚠ HTAYA15-20FM
	15xD	A	166.1	197.8	199.8	247.8	50.0	20	No	⚠ HTAYA15-20CM
	15xD	B	166.1	197.8	199.8	247.8	50.0	20	Yes	⚠ HTAYB15-20FM
	15xD	B	166.1	197.8	199.8	247.8	50.0	20	No	⚠ HTAYB15-20CM

Sub Series	Y Series Holder Diameter Range	
	Imperial (inch)	Metric (mm)
YA	0.3739" - 0.4368"	9.50 mm - 11.09 mm
YB	0.4062" - 0.4368"	10.32 mm - 11.09 mm

Connection Accessories

Insert Screws	Nylon Locking Screws	Insert Driver	Preset Torque Hand Driver	Replacement Tips	Admissible Tightening Torque*
724-IP7-1	724N-IP7-1	8IP-7	8IP-7TL	8IP-7B	7.4 in-lbs (84 N-cm)

*Tightening torques are calculated with a friction coefficient of μ = 0.14 and develop 90% of ultimate yield strength.

⚠ WARNING Refer to Speed and Feed charts for recommended adjustments to speeds and feeds. Refer to page **A25: 60** for deep hole drilling guidelines in this section of the catalog. Visit **www.alliedmachine.com/DeepHoleGuidelines** for the most up-to-date information and procedures. Factory technical assistance is available for your specific applications through our Application Engineering department.
ext: **7611** | *email:* **appeng@alliedmachine.com**

A25: 10 - 11
Key on A25: 1

A25: 50 - 57

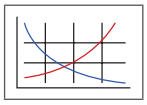

ⓘ = Imperial (in)
ⓜ = Metric (mm)
Screws sold in multiples of 10.

T-A Pro Drill Inserts

Z Series | Diameter Range: 0.4369" - 0.4998" (11.10 mm - 12.69 mm)

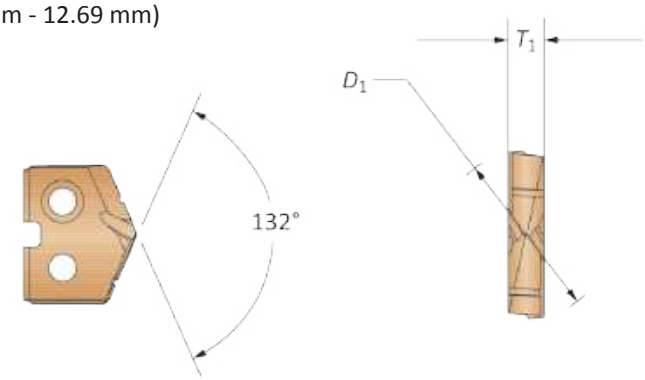

Insert					Carbide				HSS
					Part No.	Part No.	Part No.	Part No.	Part No.
Series	Fractional Equivalent	D_1 inch	D_1 mm	T_1	P	K	N	M	X
Z-A	7/16	0.4374	11.11	3/32	TAPZ-11.11	TAKZ-11.11	TANZ-11.11	TAMZ-11.11	TAXZ-11.11
Z-A	—	0.4409	11.20	3/32	TAPZ-11.20	TAKZ-11.20	TANZ-11.20	TAMZ-11.20	TAXZ-11.20
Z-A	—	0.4449	11.30	3/32	TAPZ-11.30	TAKZ-11.30	TANZ-11.30	TAMZ-11.30	TAXZ-11.30
Z-A	—	0.4488	11.40	3/32	TAPZ-11.40	TAKZ-11.40	TANZ-11.40	TAMZ-11.40	TAXZ-11.40
Z-A	—	0.4528	11.50	3/32	TAPZ-11.50	TAKZ-11.50	TANZ-11.50	TAMZ-11.50	TAXZ-11.50
Z-A	29/64	0.4531	11.51	3/32	TAPZ-11.51	TAKZ-11.51	TANZ-11.51	TAMZ-11.51	TAXZ-11.51
Z-A	—	0.4567	11.60	3/32	TAPZ-11.60	TAKZ-11.60	TANZ-11.60	TAMZ-11.60	TAXZ-11.60
Z-A	—	0.4606	11.70	3/32	TAPZ-11.70	TAKZ-11.70	TANZ-11.70	TAMZ-11.70	TAXZ-11.70
Z-A	—	0.4646	11.80	3/32	TAPZ-11.80	TAKZ-11.80	TANZ-11.80	TAMZ-11.80	TAXZ-11.80
Z-A	15/32	0.4689	11.91	3/32	TAPZ-11.91	TAKZ-11.91	TANZ-11.91	TAMZ-11.91	TAXZ-11.91
Z-A	—	0.4724	12.00	3/32	TAPZ-12.00	TAKZ-12.00	TANZ-12.00	TAMZ-12.00	TAXZ-12.00
Z-A	—	0.4764	12.10	3/32	TAPZ-12.10	TAKZ-12.10	TANZ-12.10	TAMZ-12.10	TAXZ-12.10

Inserts sold in multiples of 2.

Sub Series Holders (A, B, C, D)

Sub series holders are recommended when running carbide inserts toward the upper end of the series drill range, as well as in tougher applications requiring more insert support and holder strength. **NOTE:** Only specified sub series inserts should be used with equivalent or smaller sub series holders.

A Series Insert + A Series Holder

C Series Insert + A Series Holder

C Series Insert + C Series Holder

A Series Insert + C Series Holder

A25: 16 - 17

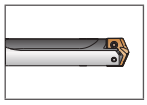

A25: 50 - 57

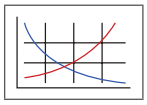

Sizes not shown are available upon request. When ordering, please follow the example below:	
Imperial:	0.5180", steel, 0 series = use Part No. **TAP0-13.16**
Metric:	13.16 mm, steel, 0 series = use Part No. **TAP0-13.16**

T-A Pro Drill Inserts

Z Series | Diameter Range: 0.4369" - 0.4998" (11.10 mm - 12.69 mm)

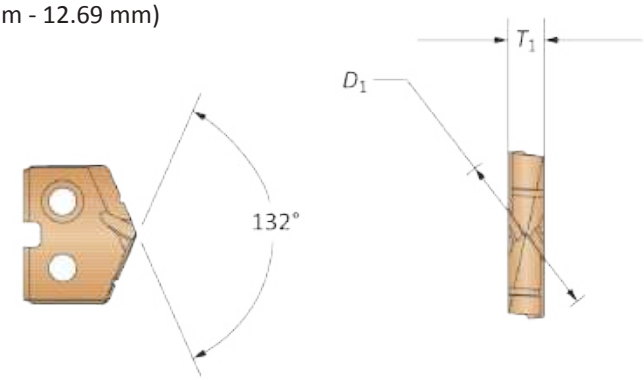

Insert					Carbide				HSS
					Part No.	Part No.	Part No.	Part No.	Part No.
Series	Fractional Equivalent	D_1 inch	D_1 mm	T_1	P	K	N	M	X
Z-B	—	0.4803	12.20	3/32	TAPZ-12.20	TAKZ-12.20	TANZ-12.20	TAMZ-12.20	TAXZ-12.20
Z-B	31/64	0.4843	12.30	3/32	TAPZ-12.30	TAKZ-12.30	TANZ-12.30	TAMZ-12.30	TAXZ-12.30
Z-B	—	0.4882	12.40	3/32	TAPZ-12.40	TAKZ-12.40	TANZ-12.40	TAMZ-12.40	TAXZ-12.40
Z-B	—	0.4921	12.50	3/32	TAPZ-12.50	TAKZ-12.50	TANZ-12.50	TAMZ-12.50	TAXZ-12.50
Z-B	—	0.4961	12.60	3/32	TAPZ-12.60	TAKZ-12.60	TANZ-12.60	TAMZ-12.60	TAXZ-12.60

Inserts sold in multiples of 2.

Sub Series Holders (A, B, C, D)

Sub series holders are recommended when running carbide inserts toward the upper end of the series drill range, as well as in tougher applications requiring more insert support and holder strength. **NOTE:** Only specified sub series inserts should be used with equivalent or smaller sub series holders.

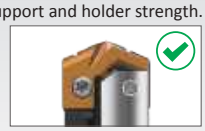

A Series Insert + A Series Holder

C Series Insert + A Series Holder

C Series Insert + C Series Holder

A Series Insert + C Series Holder

A25: 16 - 17

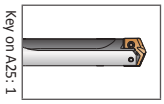

Key on A25: 1

A25: 50 - 57

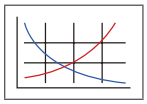

Sizes not shown are available upon request. When ordering, please follow the example below:	
Imperial:	0.5180", steel, 0 series = use Part No. **TAP0-13.16**
Metric:	13.16 mm, steel, 0 series = use Part No. **TAP0-13.16**

T-A Pro Drill Holders

Z Series Imperial | Diameter Range: 0.4369" - 0.4998"

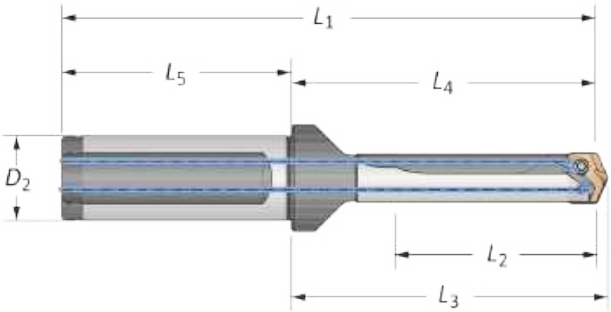

	Body						Shank			
	Length	Sub Series	L_2	L_4	L_3	L_1	L_5	D_2	Flat	Part No.
	Stub	A	0.474	1.600	1.680	3.630	2.030	3/4	Yes	**HTAZA01-075F**
	Stub	A	0.474	1.600	1.680	3.630	2.030	3/4	No	**HTAZA01-075C**
	Stub	B	0.474	1.600	1.680	3.630	2.030	3/4	Yes	**HTAZB01-075F**
	Stub	B	0.474	1.600	1.680	3.630	2.030	3/4	No	**HTAZB01-075C**
	3xD	A	1.422	2.693	2.773	4.723	2.030	3/4	Yes	**HTAZA03-075F**
	3xD	A	1.422	2.693	2.773	4.723	2.030	3/4	No	**HTAZA03-075C**
	3xD	B	1.422	2.693	2.773	4.723	2.030	3/4	Yes	**HTAZB03-075F**
	3xD	B	1.422	2.693	2.773	4.723	2.030	3/4	No	**HTAZB03-075C**
	5xD	A	2.370	3.641	3.721	5.671	2.030	3/4	Yes	**HTAZA05-075F**
	5xD	A	2.370	3.641	3.721	5.671	2.030	3/4	No	**HTAZA05-075C**
	5xD	B	2.370	3.641	3.721	5.671	2.030	3/4	Yes	**HTAZB05-075F**
	5xD	B	2.370	3.641	3.721	5.671	2.030	3/4	No	**HTAZB05-075C**
	7xD	A	3.318	4.589	4.669	6.619	2.030	3/4	Yes	**HTAZA07-075F**
	7xD	A	3.318	4.589	4.669	6.619	2.030	3/4	No	**HTAZA07-075C**
i	7xD	B	3.318	4.589	4.669	6.619	2.030	3/4	Yes	**HTAZB07-075F**
	7xD	B	3.318	4.589	4.669	6.619	2.030	3/4	No	**HTAZB07-075C**
	10xD	A	4.740	6.011	6.091	8.041	2.030	3/4	Yes	⚠ **HTAZA10-075F**
	10xD	A	4.740	6.011	6.091	8.041	2.030	3/4	No	⚠ **HTAZA10-075C**
	10xD	B	4.740	6.011	6.091	8.041	2.030	3/4	Yes	⚠ **HTAZB10-075F**
	10xD	B	4.740	6.011	6.091	8.041	2.030	3/4	No	⚠ **HTAZB10-075C**
	12xD	A	5.688	6.959	7.039	8.989	2.030	3/4	Yes	⚠ **HTAZA12-075F**
	12xD	A	5.688	6.959	7.039	8.989	2.030	3/4	No	⚠ **HTAZA12-075C**
	12xD	B	5.688	6.959	7.039	8.989	2.030	3/4	Yes	⚠ **HTAZB12-075F**
	12xD	B	5.688	6.959	7.039	8.989	2.030	3/4	No	⚠ **HTAZB12-075C**
	15xD	A	7.110	8.381	8.461	10.411	2.030	3/4	Yes	⚠ **HTAZA15-075F**
	15xD	A	7.110	8.381	8.461	10.411	2.030	3/4	No	⚠ **HTAZA15-075C**
	15xD	B	7.110	8.381	8.461	10.411	2.030	3/4	Yes	⚠ **HTAZB15-075F**
	15xD	B	7.110	8.381	8.461	10.411	2.030	3/4	No	⚠ **HTAZB15-075C**

Sub Series	Z Series Holder Diameter Range	
	Imperial (inch)	Metric (mm)
ZA	0.4369" - 0.4998"	11.10 mm - 12.69 mm
ZB	0.4802" - 0.4998"	12.20 mm - 12.69 mm

Connection Accessories

Insert Screws	Nylon Locking Screws	Insert Driver	Preset Torque Hand Driver	Replacement Tips	Admissible Tightening Torque*
7247-IP7-1	7247N-IP7-1	8IP-7	8IP-7TL	8IP-7B	7.4 in-lbs (84 N-cm)

*Tightening torques are calculated with a friction coefficient of μ = 0.14 and develop 90% of ultimate yield strength.

⚠ **WARNING** Refer to Speed and Feed charts for recommended adjustments to speeds and feeds. Refer to page **A25: 60** for deep hole drilling guidelines in this section of the catalog. Visit **www.alliedmachine.com/DeepHoleGuidelines** for the most up-to-date information and procedures. Factory technical assistance is available for your specific applications through our Application Engineering department.
ext: **7611** | *email:* **appeng@alliedmachine.com**

A25: 14 - 15
Key on A25: 1

A25: 50 - 57

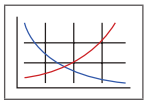

i = Imperial (in)
m = Metric (mm)
Screws sold in multiples of 10.

T-A Pro Drill Holders

Z Series Metric | Diameter Range: 11.10 mm - 12.69 mm

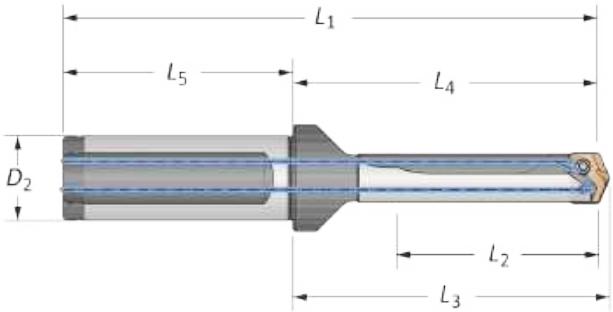

	Body						Shank			
	Length	Sub Series	L_2	L_4	L_3	L_1	L_5	D_2	Flat	Part No.
m	Stub	A	12.0	40.6	42.7	90.7	50.0	20	Yes	HTAZA01-20FM
	Stub	A	12.0	40.6	42.7	90.7	50.0	20	No	HTAZA01-20CM
	Stub	B	12.0	40.6	42.7	90.7	50.0	20	Yes	HTAZB01-20FM
	Stub	B	12.0	40.6	42.7	90.7	50.0	20	No	HTAZB01-20CM
	3xD	A	36.1	68.4	70.4	118.4	50.0	20	Yes	HTAZA03-20FM
	3xD	A	36.1	68.4	70.4	118.4	50.0	20	No	HTAZA03-20CM
	3xD	B	36.1	68.4	70.4	118.4	50.0	20	Yes	HTAZB03-20FM
	3xD	B	36.1	68.4	70.4	118.4	50.0	20	No	HTAZB03-20CM
	5xD	A	60.2	92.5	94.5	142.5	50.0	20	Yes	HTAZA05-20FM
	5xD	A	60.2	92.5	94.5	142.5	50.0	20	No	HTAZA05-20CM
	5xD	B	60.2	92.5	94.5	142.5	50.0	20	Yes	HTAZB05-20FM
	5xD	B	60.2	92.5	94.5	142.5	50.0	20	No	HTAZB05-20CM
	7xD	A	84.3	116.6	118.6	166.6	50.0	20	Yes	HTAZA07-20FM
	7xD	A	84.3	116.6	118.6	166.6	50.0	20	No	HTAZA07-20CM
	7xD	B	84.3	116.6	118.6	166.6	50.0	20	Yes	HTAZB07-20FM
	7xD	B	84.3	116.6	118.6	166.6	50.0	20	No	HTAZB07-20CM
	10xD	A	120.4	152.7	154.7	202.7	50.0	20	Yes	⚠ HTAZA10-20FM
	10xD	A	120.4	152.7	154.7	202.7	50.0	20	No	⚠ HTAZA10-20CM
	10xD	B	120.4	152.7	154.7	202.7	50.0	20	Yes	⚠ HTAZB10-20FM
	10xD	B	120.4	152.7	154.7	202.7	50.0	20	No	⚠ HTAZB10-20CM
	12xD	A	144.5	176.8	178.8	226.8	50.0	20	Yes	⚠ HTAZA12-20FM
	12xD	A	144.5	176.8	178.8	226.8	50.0	20	No	⚠ HTAZA12-20CM
	12xD	B	144.5	176.8	178.8	226.8	50.0	20	Yes	⚠ HTAZB12-20FM
	12xD	B	144.5	176.8	178.8	226.8	50.0	20	No	⚠ HTAZB12-20CM
	15xD	A	180.6	212.9	214.9	262.9	50.0	20	Yes	⚠ HTAZA15-20FM
	15xD	A	180.6	212.9	214.9	262.9	50.0	20	No	⚠ HTAZA15-20CM
	15xD	B	180.6	212.9	214.9	262.9	50.0	20	Yes	⚠ HTAZB15-20FM
	15xD	B	180.6	212.9	214.9	262.9	50.0	20	No	⚠ HTAZB15-20CM

Sub Series	Z Series Holder Diameter Range	
	Imperial (inch)	Metric (mm)
ZA	0.4369" - 0.4998"	11.10 mm - 12.69 mm
ZB	0.4802" - 0.4998"	12.20 mm - 12.69 mm

Connection Accessories

Insert Screws	Nylon Locking Screws	Insert Driver	Preset Torque Hand Driver	Replacement Tips	Admissible Tightening Torque*
7247-IP7-1	7247N-IP7-1	8IP-7	8IP-7TL	8IP-7B	7.4 in-lbs (84 N-cm)

*Tightening torques are calculated with a friction coefficient of μ = 0.14 and develop 90% of ultimate yield strength.

⚠ WARNING Refer to Speed and Feed charts for recommended adjustments to speeds and feeds. Refer to page **A25: 60** for deep hole drilling guidelines in this section of the catalog. Visit **www.alliedmachine.com/DeepHoleGuidelines** for the most up-to-date information and procedures. Factory technical assistance is available for your specific applications through our Application Engineering department.
ext: **7611** | *email:* **appeng@alliedmachine.com**

A25: 14 - 15
Key on A25: 1

A25: 50 - 57

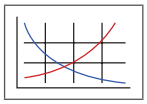

ⓘ = Imperial (in)
ⓜ = Metric (mm)
Screws sold in multiples of 10.

T-A Pro Drill Inserts

0 Series | Diameter Range: 0.4999" - 0.6946" (12.70 mm - 17.64 mm)

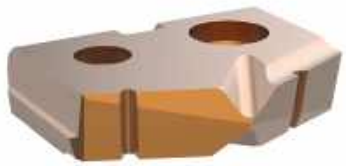

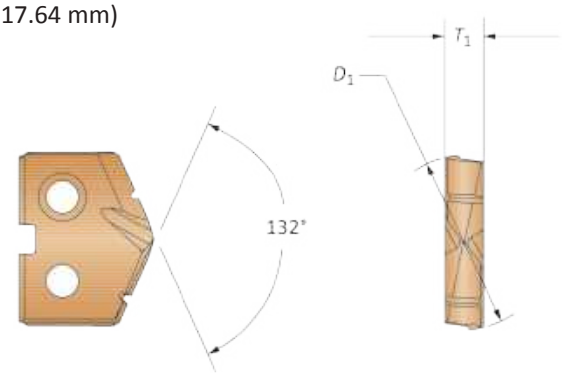

Insert					Carbide				HSS
					Part No.	Part No.	Part No.	Part No.	Part No.
Series	Fractional Equivalent	D_1 inch	D_1 mm	T_1	P	K	N	M	X
0-A	1/2	0.5000	12.70	1/8	TAP0-12.70	TAK0-12.70	TAN0-12.70	TAM0-12.70	TAX0-12.70
0-A	—	0.5039	12.80	1/8	TAP0-12.80	TAK0-12.80	TAN0-12.80	TAM0-12.80	TAX0-12.80
0-A	—	0.5079	12.90	1/8	TAP0-12.90	TAK0-12.90	TAN0-12.90	TAM0-12.90	TAX0-12.90
0-A	—	0.5118	13.00	1/8	TAP0-13.00	TAK0-13.00	TAN0-13.00	TAM0-13.00	TAX0-13.00
0-A	33/64	0.5157	13.10	1/8	TAP0-13.10	TAK0-13.10	TAN0-13.10	TAM0-13.10	TAX0-13.10
0-A	—	0.5197	13.20	1/8	TAP0-13.20	TAK0-13.20	TAN0-13.20	TAM0-13.20	TAX0-13.20
0-A	—	0.5236	13.30	1/8	TAP0-13.30	TAK0-13.30	TAN0-13.30	TAM0-13.30	TAX0-13.30
0-A	—	0.5276	13.40	1/8	TAP0-13.40	TAK0-13.40	TAN0-13.40	TAM0-13.40	TAX0-13.40
0-A	17/32	0.5311	13.49	1/8	TAP0-13.49	TAK0-13.49	TAN0-13.49	TAM0-13.49	TAX0-13.49
0-A	—	0.5315	13.50	1/8	TAP0-13.50	TAK0-13.50	TAN0-13.50	TAM0-13.50	TAX0-13.50
0-A	—	0.5354	13.60	1/8	TAP0-13.60	TAK0-13.60	TAN0-13.60	TAM0-13.60	TAX0-13.60
0-A	—	0.5394	13.70	1/8	TAP0-13.70	TAK0-13.70	TAN0-13.70	TAM0-13.70	TAX0-13.70
0-A	—	0.5433	13.80	1/8	TAP0-13.80	TAK0-13.80	TAN0-13.80	TAM0-13.80	TAX0-13.80
0-A	35/64	0.5469	13.89	1/8	TAP0-13.89	TAK0-13.89	TAN0-13.89	TAM0-13.89	TAX0-13.89
0-B	—	0.5512	14.00	1/8	TAP0-14.00	TAK0-14.00	TAN0-14.00	TAM0-14.00	TAX0-14.00
0-B	—	0.5551	14.10	1/8	TAP0-14.10	TAK0-14.10	TAN0-14.10	TAM0-14.10	TAX0-14.10
0-B	—	0.5591	14.20	1/8	TAP0-14.20	TAK0-14.20	TAN0-14.20	TAM0-14.20	TAX0-14.20
0-B	9/16	0.5626	14.29	1/8	TAP0-14.29	TAK0-14.29	TAN0-14.29	TAM0-14.29	TAX0-14.29
0-B	—	0.5669	14.40	1/8	TAP0-14.40	TAK0-14.40	TAN0-14.40	TAM0-14.40	TAX0-14.40
0-B	—	0.5709	14.50	1/8	TAP0-14.50	TAK0-14.50	TAN0-14.50	TAM0-14.50	TAX0-14.50
0-B	—	0.5748	14.60	1/8	TAP0-14.60	TAK0-14.60	TAN0-14.60	TAM0-14.60	TAX0-14.60
0-B	37/64	0.5780	14.68	1/8	TAP0-14.68	TAK0-14.68	TAN0-14.68	TAM0-14.68	TAX0-14.68
0-B	—	0.5827	14.80	1/8	TAP0-14.80	TAK0-14.80	TAN0-14.80	TAM0-14.80	TAX0-14.80
0-B	—	0.5866	14.90	1/8	TAP0-14.90	TAK0-14.90	TAN0-14.90	TAM0-14.90	TAX0-14.90
0-B	—	0.5906	15.00	1/8	TAP0-15.00	TAK0-15.00	TAN0-15.00	TAM0-15.00	TAX0-15.00

Inserts sold in multiples of 2.

Sub Series Holders (A, B, C, D)

Sub series holders are recommended when running carbide inserts toward the upper end of the series drill range, as well as in tougher applications requiring more insert support and holder strength. **NOTE:** Only specified sub series inserts should be used with equivalent or smaller sub series holders.

A Series Insert + A Series Holder

C Series Insert + A Series Holder

C Series Insert + C Series Holder

A Series Insert + C Series Holder

A25: 20 - 23

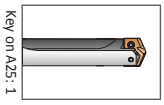

A25: 50 - 57

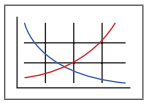

Sizes not shown are available upon request. When ordering, please follow the example below:	
Imperial:	0.5180", steel, 0 series = use Part No. **TAP0-13.16**
Metric:	13.16 mm, steel, 0 series = use Part No. **TAP0-13.16**

T-A Pro Drill Inserts

0 Series | Diameter Range: 0.4999" - 0.6946" (12.70 mm - 17.64 mm)

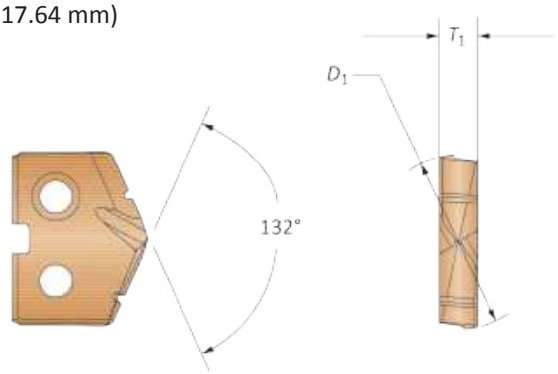

Insert					Carbide				HSS
					Part No.	Part No.	Part No.	Part No.	Part No.
Series	Fractional Equivalent	D_1 inch	D_1 mm	T_1	P	K	N	M	X
0-C	19/32	0.5937	15.08	1/8	TAP0-15.08	TAK0-15.08	TAN0-15.08	TAM0-15.08	TAX0-15.08
0-C	—	0.5984	15.20	1/8	TAP0-15.20	TAK0-15.20	TAN0-15.20	TAM0-15.20	TAX0-15.20
0-C	—	0.6004	15.25	1/8	TAP0-15.25	TAK0-15.25	TAN0-15.25	TAM0-15.25	TAX0-15.25
0-C	—	0.6024	15.30	1/8	TAP0-15.30	TAK0-15.30	TAN0-15.30	TAM0-15.30	TAX0-15.30
0-C	—	0.6063	15.40	1/8	TAP0-15.40	TAK0-15.40	TAN0-15.40	TAM0-15.40	TAX0-15.40
0-C	39/64	0.6094	15.48	1/8	TAP0-15.48	TAK0-15.48	TAN0-15.48	TAM0-15.48	TAX0-15.48
0-C	—	0.6102	15.50	1/8	TAP0-15.50	TAK0-15.50	TAN0-15.50	TAM0-15.50	TAX0-15.50
0-C	—	0.6142	15.60	1/8	TAP0-15.60	TAK0-15.60	TAN0-15.60	TAM0-15.60	TAX0-15.60
0-C	—	0.6181	15.70	1/8	TAP0-15.70	TAK0-15.70	TAN0-15.70	TAM0-15.70	TAX0-15.70
0-C	—	0.6220	15.80	1/8	TAP0-15.80	TAK0-15.80	TAN0-15.80	TAM0-15.80	TAX0-15.80
0-C	5/8	0.6252	15.88	1/8	TAP0-15.88	TAK0-15.88	TAN0-15.88	TAM0-15.88	TAX0-15.88
0-C	—	0.6299	16.00	1/8	TAP0-16.00	TAK0-16.00	TAN0-16.00	TAM0-16.00	TAX0-16.00
0-C	—	0.6331	16.08	1/8	TAP0-16.08	TAK0-16.08	TAN0-16.08	TAM0-16.08	TAX0-16.08
0-C	—	0.6378	16.20	1/8	TAP0-16.20	TAK0-16.20	TAN0-16.20	TAM0-16.20	TAX0-16.20
0-C	41/64	0.6406	16.27	1/8	TAP0-16.27	TAK0-16.27	TAN0-16.27	TAM0-16.27	TAX0-16.27
0-C	—	0.6457	16.40	1/8	TAP0-16.40	TAK0-16.40	TAN0-16.40	TAM0-16.40	TAX0-16.40
0-D	—	0.6496	16.50	1/8	TAP0-16.50	TAK0-16.50	TAN0-16.50	TAM0-16.50	TAX0-16.50
0-D	—	0.6535	16.60	1/8	TAP0-16.60	TAK0-16.60	TAN0-16.60	TAM0-16.60	TAX0-16.60
0-D	21/32	0.6563	16.67	1/8	TAP0-16.67	TAK0-16.67	TAN0-16.67	TAM0-16.67	TAX0-16.67
0-D	—	0.6614	16.80	1/8	TAP0-16.80	TAK0-16.80	TAN0-16.80	TAM0-16.80	TAX0-16.80
0-D	—	0.6654	16.90	1/8	TAP0-16.90	TAK0-16.90	TAN0-16.90	TAM0-16.90	TAX0-16.90
0-D	—	0.6693	17.00	1/8	TAP0-17.00	TAK0-17.00	TAN0-17.00	TAM0-17.00	TAX0-17.00
0-D	43/64	0.6720	17.07	1/8	TAP0-17.07	TAK0-17.07	TAN0-17.07	TAM0-17.07	TAX0-17.07
0-D	—	0.6732	17.10	1/8	TAP0-17.10	TAK0-17.10	TAN0-17.10	TAM0-17.10	TAX0-17.10
0-D	—	0.6772	17.20	1/8	TAP0-17.20	TAK0-17.20	TAN0-17.20	TAM0-17.20	TAX0-17.20
0-D	—	0.6811	17.30	1/8	TAP0-17.30	TAK0-17.30	TAN0-17.30	TAM0-17.30	TAX0-17.30
0-D	—	0.6850	17.40	1/8	TAP0-17.40	TAK0-17.40	TAN0-17.40	TAM0-17.40	TAX0-17.40
0-D	11/16	0.6874	17.46	1/8	TAP0-17.46	TAK0-17.46	TAN0-17.46	TAM0-17.46	TAX0-17.46
0-D	—	0.6890	17.50	1/8	TAP0-17.50	TAK0-17.50	TAN0-17.50	TAM0-17.50	TAX0-17.50
0-D	—	0.6929	17.60	1/8	TAP0-17.60	TAK0-17.60	TAN0-17.60	TAM0-17.60	TAX0-17.60

Inserts sold in multiples of 2.

Sub Series Holders (A, B, C, D)

Sub series holders are recommended when running carbide inserts toward the upper end of the series drill range, as well as in tougher applications requiring more insert support and holder strength. **NOTE:** Only specified sub series inserts should be used with equivalent or smaller sub series holders.

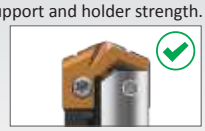

A Series Insert + A Series Holder

C Series Insert + A Series Holder

C Series Insert + C Series Holder

A Series Insert + C Series Holder

A25: 20 - 23

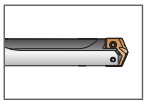

Key on A25: 1

A25: 50 - 57

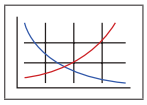

Sizes not shown are available upon request. When ordering, please follow the example below:	
Imperial:	0.5180", steel, 0 series = use Part No. **TAP0-13.16**
Metric:	13.16 mm, steel, 0 series = use Part No. **TAP0-13.16**

T-A Pro Drill Holders

0 Series Imperial | Diameter Range: 0.4999" - 0.6946"

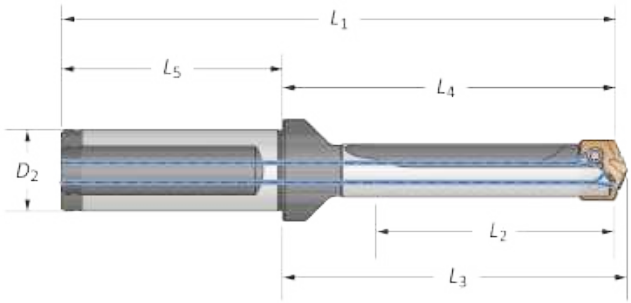

	Body						Shank			
	Length	Sub Series	L_2	L_4	L_3	L_1	L_5	D_2	Flat	Part No.
	Stub	A	0.603	1.731	1.838	3.761	2.030	3/4	Yes	**HTA0A01-075F**
	Stub	A	0.603	1.731	1.838	3.761	2.030	3/4	No	**HTA0A01-075C**
	Stub	B	0.603	1.731	1.838	3.761	2.030	3/4	Yes	**HTA0B01-075F**
	Stub	B	0.603	1.731	1.838	3.761	2.030	3/4	No	**HTA0B01-075C**
	Stub	C	0.603	1.731	1.838	3.761	2.030	3/4	Yes	**HTA0C01-075F**
	Stub	C	0.603	1.731	1.838	3.761	2.030	3/4	No	**HTA0C01-075C**
	Stub	D	0.603	1.731	1.838	3.761	2.030	3/4	Yes	**HTA0D01-075F**
	Stub	D	0.603	1.731	1.838	3.761	2.030	3/4	No	**HTA0D01-075C**
	3xD	A	1.809	3.064	3.171	5.094	2.030	3/4	Yes	**HTA0A03-075F**
	3xD	A	1.809	3.064	3.171	5.094	2.030	3/4	No	**HTA0A03-075C**
	3xD	B	1.809	3.064	3.171	5.094	2.030	3/4	Yes	**HTA0B03-075F**
	3xD	B	1.809	3.064	3.171	5.094	2.030	3/4	No	**HTA0B03-075C**
	3xD	C	1.809	3.064	3.171	5.094	2.030	3/4	Yes	**HTA0C03-075F**
	3xD	C	1.809	3.064	3.171	5.094	2.030	3/4	No	**HTA0C03-075C**
	3xD	D	1.809	3.064	3.171	5.094	2.030	3/4	Yes	**HTA0D03-075F**
i	3xD	D	1.809	3.064	3.171	5.094	2.030	3/4	No	**HTA0D03-075C**
	5xD	A	3.015	4.270	4.377	6.300	2.030	3/4	Yes	**HTA0A05-075F**
	5xD	A	3.015	4.270	4.377	6.300	2.030	3/4	No	**HTA0A05-075C**
	5xD	B	3.015	4.270	4.377	6.300	2.030	3/4	Yes	**HTA0B05-075F**
	5xD	B	3.015	4.270	4.377	6.300	2.030	3/4	No	**HTA0B05-075C**
	5xD	C	3.015	4.270	4.377	6.300	2.030	3/4	Yes	**HTA0C05-075F**
	5xD	C	3.015	4.270	4.377	6.300	2.030	3/4	No	**HTA0C05-075C**
	5xD	D	3.015	4.270	4.377	6.300	2.030	3/4	Yes	**HTA0D05-075F**
	5xD	D	3.015	4.270	4.377	6.300	2.030	3/4	No	**HTA0D05-075C**
	7xD	A	4.221	5.476	5.583	7.506	2.030	3/4	Yes	**HTA0A07-075F**
	7xD	A	4.221	5.476	5.583	7.506	2.030	3/4	No	**HTA0A07-075C**
	7xD	B	4.221	5.476	5.583	7.506	2.030	3/4	Yes	**HTA0B07-075F**
	7xD	B	4.221	5.476	5.583	7.506	2.030	3/4	No	**HTA0B07-075C**
	7xD	C	4.221	5.476	5.583	7.506	2.030	3/4	Yes	**HTA0C07-075F**
	7xD	C	4.221	5.476	5.583	7.506	2.030	3/4	No	**HTA0C07-075C**
	7xD	D	4.221	5.476	5.583	7.506	2.030	3/4	Yes	**HTA0D07-075F**
	7xD	D	4.221	5.476	5.583	7.506	2.030	3/4	No	**HTA0D07-075C**

Sub Series	0 Series Holder Diameter Range	
	Imperial (inch)	Metric (mm)
0A	0.4999" - 0.6946"	12.70 mm - 17.64 mm
0B	0.5510" - 0.6946"	14.00 mm - 17.64 mm
0C	0.5936" - 0.6946"	15.08 mm - 17.64 mm
0D	0.6495" - 0.6946"	16.50 mm - 17.64 mm

Connection Accessories

	Insert Screws	Nylon Locking Screws	Insert Driver	Preset Torque Hand Driver	Replacement Tips	Admissible Tightening Torque*
A/B	72556-IP8-1	72556N-IP8-1	8IP-8	8IP-8TL	8IP-8B	15.5 in-lbs (175 N-cm)
C/D	72567-IP8-1	72567N-IP8-1	8IP-8	8IP-8TL	8IP-8B	15.5 in-lbs (175 N-cm)

*Tightening torques are calculated with a friction coefficient of μ = 0.14 and develop 90% of ultimate yield strength.

⚠ WARNING Refer to Speed and Feed charts for recommended adjustments to speeds and feeds. Refer to page **A25: 60** for deep hole drilling guidelines in this section of the catalog. Visit **www.alliedmachine.com/DeepHoleGuidelines** for the most up-to-date information and procedures. Factory technical assistance is available for your specific applications through our Application Engineering department.
ext: **7611** | *email:* **appeng@alliedmachine.com**

A25: 18 - 19

A25: 50 - 57

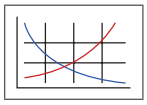

i = Imperial (in)
m = Metric (mm)
Screws sold in multiples of 10.

T-A Pro Drill Holders

0 Series Imperial | Diameter Range: 0.4999" - 0.6946"

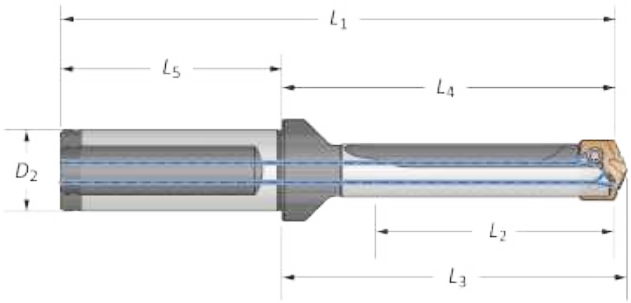

	Body						Shank			
	Length	Sub Series	L_2	L_4	L_3	L_1	L_5	D_2	Flat	Part No.
	10xD	A	6.030	7.285	7.392	9.315	2.030	3/4	Yes	HTA0A10-075F
	10xD	A	6.030	7.285	7.392	9.315	2.030	3/4	No	HTA0A10-075C
	10xD	B	6.030	7.285	7.392	9.315	2.030	3/4	Yes	HTA0B10-075F
	10xD	B	6.030	7.285	7.392	9.315	2.030	3/4	No	HTA0B10-075C
	10xD	C	6.030	7.285	7.392	9.315	2.030	3/4	Yes	HTA0C10-075F
	10xD	C	6.030	7.285	7.392	9.315	2.030	3/4	No	HTA0C10-075C
	10xD	D	6.030	7.285	7.392	9.315	2.030	3/4	Yes	HTA0D10-075F
	10xD	D	6.030	7.285	7.392	9.315	2.030	3/4	No	HTA0D10-075C
	12xD	A	7.236	8.491	8.598	10.521	2.030	3/4	Yes	HTA0A12-075F
	12xD	A	7.236	8.491	8.598	10.521	2.030	3/4	No	HTA0A12-075C
	12xD	B	7.236	8.491	8.598	10.521	2.030	3/4	Yes	HTA0B12-075F
	12xD	B	7.236	8.491	8.598	10.521	2.030	3/4	No	HTA0B12-075C
	12xD	C	7.236	8.491	8.598	10.521	2.030	3/4	Yes	HTA0C12-075F
	12xD	C	7.236	8.491	8.598	10.521	2.030	3/4	No	HTA0C12-075C
	12xD	D	7.236	8.491	8.598	10.521	2.030	3/4	Yes	HTA0D12-075F
	12xD	D	7.236	8.491	8.598	10.521	2.030	3/4	No	HTA0D12-075C
	15xD	A	9.045	10.300	10.407	12.330	2.030	3/4	Yes	HTA0A15-075F
	15xD	A	9.045	10.300	10.407	12.330	2.030	3/4	No	HTA0A15-075C
	15xD	B	9.045	10.300	10.407	12.330	2.030	3/4	Yes	HTA0B15-075F
	15xD	B	9.045	10.300	10.407	12.330	2.030	3/4	No	HTA0B15-075C
	15xD	C	9.045	10.300	10.407	12.330	2.030	3/4	Yes	HTA0C15-075F
	15xD	C	9.045	10.300	10.407	12.330	2.030	3/4	No	HTA0C15-075C
	15xD	D	9.045	10.300	10.407	12.330	2.030	3/4	Yes	HTA0D15-075F
	15xD	D	9.045	10.300	10.407	12.330	2.030	3/4	No	HTA0D15-075C

Sub Series	0 Series Holder Diameter Range	
	Imperial (inch)	Metric (mm)
0A	0.4999" - 0.6946"	12.70 mm - 17.64 mm
0B	0.5510" - 0.6946"	14.00 mm - 17.64 mm
0C	0.5936" - 0.6946"	15.08 mm - 17.64 mm
0D	0.6495" - 0.6946"	16.50 mm - 17.64 mm

Connection Accessories

	Insert Screws	Nylon Locking Screws	Insert Driver	Preset Torque Hand Driver	Replacement Tips	Admissible Tightening Torque*
A/B	72556-IP8-1	72556N-IP8-1	8IP-8	8IP-8TL	8IP-8B	15.5 in-lbs (175 N-cm)
C/D	72567-IP8-1	72567N-IP8-1	8IP-8	8IP-8TL	8IP-8B	15.5 in-lbs (175 N-cm)

*Tightening torques are calculated with a friction coefficient of μ = 0.14 and develop 90% of ultimate yield strength.

WARNING Refer to Speed and Feed charts for recommended adjustments to speeds and feeds. Refer to page **A25: 60** for deep hole drilling guidelines in this section of the catalog. Visit **www.alliedmachine.com/DeepHoleGuidelines** for the most up-to-date information and procedures. Factory technical assistance is available for your specific applications through our Application Engineering department.
ext: **7611** | *email:* **appeng@alliedmachine.com**

A25: 18 - 19
Key on A25: 1
A25: 50 - 57

= Imperial (in)
= Metric (mm)
Screws sold in multiples of 10.

T-A Pro Drill Holders

0 Series Metric | Diameter Range: 12.70 mm - 17.64 mm

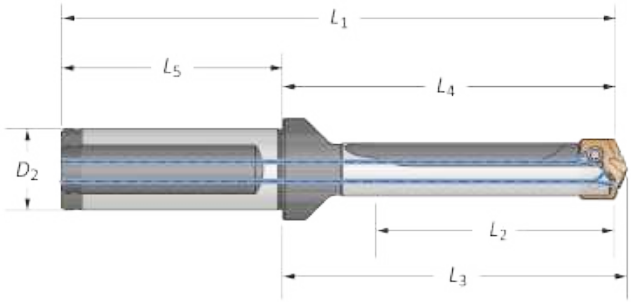

	Body						Shank			
	Length	Sub Series	L_2	L_4	L_3	L_1	L_5	D_2	Flat	Part No.
	Stub	A	15.3	44.0	46.7	94.0	50.0	20	Yes	**HTA0A01-20FM**
	Stub	A	15.3	44.0	46.7	94.0	50.0	20	No	**HTA0A01-20CM**
	Stub	B	15.3	44.0	46.7	94.0	50.0	20	Yes	**HTA0B01-20FM**
	Stub	B	15.3	44.0	46.7	94.0	50.0	20	No	**HTA0B01-20CM**
	Stub	C	15.3	44.0	46.7	94.0	50.0	20	Yes	**HTA0C01-20FM**
	Stub	C	15.3	44.0	46.7	94.0	50.0	20	No	**HTA0C01-20CM**
	Stub	D	15.3	44.0	46.7	94.0	50.0	20	Yes	**HTA0D01-20FM**
	Stub	D	15.3	44.0	46.7	94.0	50.0	20	No	**HTA0D01-20CM**
	3xD	A	45.9	77.8	80.5	127.8	50.0	20	Yes	**HTA0A03-20FM**
	3xD	A	45.9	77.8	80.5	127.8	50.0	20	No	**HTA0A03-20CM**
	3xD	B	45.9	77.8	80.5	127.8	50.0	20	Yes	**HTA0B03-20FM**
	3xD	B	45.9	77.8	80.5	127.8	50.0	20	No	**HTA0B03-20CM**
	3xD	C	45.9	77.8	80.5	127.8	50.0	20	Yes	**HTA0C03-20FM**
	3xD	C	45.9	77.8	80.5	127.8	50.0	20	No	**HTA0C03-20CM**
	3xD	D	45.9	77.8	80.5	127.8	50.0	20	Yes	**HTA0D03-20FM**
ⓜ	3xD	D	45.9	77.8	80.5	127.8	50.0	20	No	**HTA0D03-20CM**
	5xD	A	76.6	108.5	111.2	158.5	50.0	20	Yes	**HTA0A05-20FM**
	5xD	A	76.6	108.5	111.2	158.5	50.0	20	No	**HTA0A05-20CM**
	5xD	B	76.6	108.5	111.2	158.5	50.0	20	Yes	**HTA0B05-20FM**
	5xD	B	76.6	108.5	111.2	158.5	50.0	20	No	**HTA0B05-20CM**
	5xD	C	76.6	108.5	111.2	158.5	50.0	20	Yes	**HTA0C05-20FM**
	5xD	C	76.6	108.5	111.2	158.5	50.0	20	No	**HTA0C05-20CM**
	5xD	D	76.6	108.5	111.2	158.5	50.0	20	Yes	**HTA0D05-20FM**
	5xD	D	76.6	108.5	111.2	158.5	50.0	20	No	**HTA0D05-20CM**
	7xD	A	107.2	139.1	141.8	189.1	50.0	20	Yes	**HTA0A07-20FM**
	7xD	A	107.2	139.1	141.8	189.1	50.0	20	No	**HTA0A07-20CM**
	7xD	B	107.2	139.1	141.8	189.1	50.0	20	Yes	**HTA0B07-20FM**
	7xD	B	107.2	139.1	141.8	189.1	50.0	20	No	**HTA0B07-20CM**
	7xD	C	107.2	139.1	141.8	189.1	50.0	20	Yes	**HTA0C07-20FM**
	7xD	C	107.2	139.1	141.8	189.1	50.0	20	No	**HTA0C07-20CM**
	7xD	D	107.2	139.1	141.8	189.1	50.0	20	Yes	**HTA0D07-20FM**
	7xD	D	107.2	139.1	141.8	189.1	50.0	20	No	**HTA0D07-20CM**

Sub Series	0 Series Holder Diameter Range	
	Imperial (inch)	Metric (mm)
0A	0.4999" - 0.6946"	12.70 mm - 17.64 mm
0B	0.5510" - 0.6946"	14.00 mm - 17.64 mm
0C	0.5936" - 0.6946"	15.08 mm - 17.64 mm
0D	0.6495" - 0.6946"	16.50 mm - 17.64 mm

Connection Accessories

	Insert Screws	Nylon Locking Screws	Insert Driver	Preset Torque Hand Driver	Replacement Tips	Admissible Tightening Torque*
A/B	72556-IP8-1	72556N-IP8-1	8IP-8	8IP-8TL	8IP-8B	15.5 in-lbs (175 N-cm)
C/D	72567-IP8-1	72567N-IP8-1	8IP-8	8IP-8TL	8IP-8B	15.5 in-lbs (175 N-cm)

*Tightening torques are calculated with a friction coefficient of μ = 0.14 and develop 90% of ultimate yield strength.

⚠ WARNING Refer to Speed and Feed charts for recommended adjustments to speeds and feeds. Refer to page **A25: 60** for deep hole drilling guidelines in this section of the catalog. Visit **www.alliedmachine.com/DeepHoleGuidelines** for the most up-to-date information and procedures. Factory technical assistance is available for your specific applications through our Application Engineering department.
ext: **7611** | *email:* **appeng@alliedmachine.com**

A25: 18 - 19

A25: 50 - 57

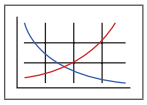

ⓘ = Imperial (in)
ⓜ = Metric (mm)
Screws sold in multiples of 10.

T-A Pro Drill Holders

0 Series Metric | Diameter Range: 12.70 mm - 17.64 mm

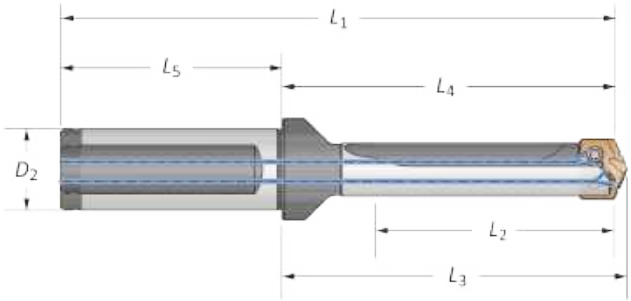

	Body						Shank			
	Length	Sub Series	L_2	L_4	L_3	L_1	L_5	D_2	Flat	Part No.
m	10xD	A	153.2	185.0	187.8	235.1	50.0	20	Yes	⚠HTA0A10-20FM
	10xD	A	153.2	185.0	187.8	235.1	50.0	20	No	⚠HTA0A10-20CM
	10xD	B	153.2	185.0	187.8	235.1	50.0	20	Yes	⚠HTA0B10-20FM
	10xD	B	153.2	185.0	187.8	235.1	50.0	20	No	⚠HTA0B10-20CM
	10xD	C	153.2	185.0	187.8	235.1	50.0	20	Yes	⚠HTA0C10-20FM
	10xD	C	153.2	185.0	187.8	235.1	50.0	20	No	⚠HTA0C10-20CM
	10xD	D	153.2	185.0	187.8	235.1	50.0	20	Yes	⚠HTA0D10-20FM
	10xD	D	153.2	185.0	187.8	235.1	50.0	20	No	⚠HTA0D10-20CM
	12xD	A	183.8	215.7	218.4	265.7	50.0	20	Yes	⚠HTA0A12-20FM
	12xD	A	183.8	215.7	218.4	265.7	50.0	20	No	⚠HTA0A12-20CM
	12xD	B	183.8	215.7	218.4	265.7	50.0	20	Yes	⚠HTA0B12-20FM
	12xD	B	183.8	215.7	218.4	265.7	50.0	20	No	⚠HTA0B12-20CM
	12xD	C	183.8	215.7	218.4	265.7	50.0	20	Yes	⚠HTA0C12-20FM
	12xD	C	183.8	215.7	218.4	265.7	50.0	20	No	⚠HTA0C12-20CM
	12xD	D	183.8	215.7	218.4	265.7	50.0	20	Yes	⚠HTA0D12-20FM
	12xD	D	183.8	215.7	218.4	265.7	50.0	20	No	⚠HTA0D12-20CM
	15xD	A	229.7	261.6	264.3	311.6	50.0	20	Yes	⚠HTA0A15-20FM
	15xD	A	229.7	261.6	264.3	311.6	50.0	20	No	⚠HTA0A15-20CM
	15xD	B	229.7	261.6	264.3	311.6	50.0	20	Yes	⚠HTA0B15-20FM
	15xD	B	229.7	261.6	264.3	311.6	50.0	20	No	⚠HTA0B15-20CM
	15xD	C	229.7	261.6	264.3	311.6	50.0	20	Yes	⚠HTA0C15-20FM
	15xD	C	229.7	261.6	264.3	311.6	50.0	20	No	⚠HTA0C15-20CM
	15xD	D	229.7	261.6	264.3	311.6	50.0	20	Yes	⚠HTA0D15-20FM
	15xD	D	229.7	261.6	264.3	311.6	50.0	20	No	⚠HTA0D15-20CM

Sub Series	0 Series Holder Diameter Range	
	Imperial (inch)	Metric (mm)
0A	0.4999" - 0.6946"	12.70 mm - 17.64 mm
0B	0.5510" - 0.6946"	14.00 mm - 17.64 mm
0C	0.5936" - 0.6946"	15.08 mm - 17.64 mm
0D	0.6495" - 0.6946"	16.50 mm - 17.64 mm

Connection Accessories

	Insert Screws	Nylon Locking Screws	Insert Driver	Preset Torque Hand Driver	Replacement Tips	Admissible Tightening Torque*
A/B	72556-IP8-1	72556N-IP8-1	8IP-8	8IP-8TL	8IP-8B	15.5 in-lbs (175 N-cm)
C/D	72567-IP8-1	72567N-IP8-1	8IP-8	8IP-8TL	8IP-8B	15.5 in-lbs (175 N-cm)

*Tightening torques are calculated with a friction coefficient of μ = 0.14 and develop 90% of ultimate yield strength.

⚠ WARNING Refer to Speed and Feed charts for recommended adjustments to speeds and feeds. Refer to page **A25: 60** for deep hole drilling guidelines in this section of the catalog. Visit **www.alliedmachine.com/DeepHoleGuidelines** for the most up-to-date information and procedures. Factory technical assistance is available for your specific applications through our Application Engineering department.
ext: **7611** | *email:* **appeng@alliedmachine.com**

A25: 18 - 19
Key on A25: 1
A25: 50 - 57

ⓘ = Imperial (in)
ⓜ = Metric (mm)
Screws sold in multiples of 10.

T-A Pro Drill Inserts

1 Series | Diameter Range: 0.6947" - 0.9596" (17.65 mm - 24.37 mm)

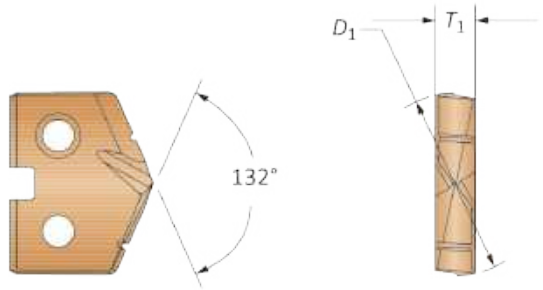

Insert					Carbide				HSS
					Part No.	Part No.	Part No.	Part No.	Part No.
Series	Fractional Equivalent	D_1 inch	D_1 mm	T_1	P	K	N	M	X
1-A	—	0.6969	17.70	5/32	TAP1-17.70	TAK1-17.70	TAN1-17.70	TAM1-17.70	TAX1-17.70
1-A	—	0.7008	17.80	5/32	TAP1-17.80	TAK1-17.80	TAN1-17.80	TAM1-17.80	TAX1-17.80
1-A	45/64	0.7031	17.86	5/32	TAP1-17.86	TAK1-17.86	TAN1-17.86	TAM1-17.86	TAX1-17.86
1-A	—	0.7047	17.90	5/32	TAP1-17.90	TAK1-17.90	TAN1-17.90	TAM1-17.90	TAX1-17.90
1-A	—	0.7087	18.00	5/32	TAP1-18.00	TAK1-18.00	TAN1-18.00	TAM1-18.00	TAX1-18.00
1-A	—	0.7126	18.10	5/32	TAP1-18.10	TAK1-18.10	TAN1-18.10	TAM1-18.10	TAX1-18.10
1-A	—	0.7165	18.20	5/32	TAP1-18.20	TAK1-18.20	TAN1-18.20	TAM1-18.20	TAX1-18.20
1-A	23/32	0.7189	18.26	5/32	TAP1-18.26	TAK1-18.26	TAN1-18.26	TAM1-18.26	TAX1-18.26
1-A	—	0.7205	18.30	5/32	TAP1-18.30	TAK1-18.30	TAN1-18.30	TAM1-18.30	TAX1-18.30
1-A	—	0.7244	18.40	5/32	TAP1-18.40	TAK1-18.40	TAN1-18.40	TAM1-18.40	TAX1-18.40
1-A	—	0.7283	18.50	5/32	TAP1-18.50	TAK1-18.50	TAN1-18.50	TAM1-18.50	TAX1-18.50
1-A	—	0.7323	18.60	5/32	TAP1-18.60	TAK1-18.60	TAN1-18.60	TAM1-18.60	TAX1-18.60
1-A	47/64	0.7343	18.65	5/32	TAP1-18.65	TAK1-18.65	TAN1-18.65	TAM1-18.65	TAX1-18.65
1-A	—	0.7362	18.70	5/32	TAP1-18.70	TAK1-18.70	TAN1-18.70	TAM1-18.70	TAX1-18.70
1-A	—	0.7402	18.80	5/32	TAP1-18.80	TAK1-18.80	TAN1-18.80	TAM1-18.80	TAX1-18.80
1-A	—	0.7441	18.90	5/32	TAP1-18.90	TAK1-18.90	TAN1-18.90	TAM1-18.90	TAX1-18.90
1-A	—	0.7480	19.00	5/32	TAP1-19.00	TAK1-19.00	TAN1-19.00	TAM1-19.00	TAX1-19.00

Inserts sold in multiples of 2.

Sub Series Holders (A, B, C, D)

Sub series holders are recommended when running carbide inserts toward the upper end of the series drill range, as well as in tougher applications requiring more insert support and holder strength. **NOTE:** Only specified sub series inserts should be used with equivalent or smaller sub series holders.

A Series Insert + A Series Holder

C Series Insert + A Series Holder

C Series Insert + C Series Holder

A Series Insert + C Series Holder

A25: 28 - 31

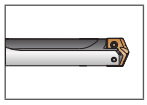

A25: 50 - 57

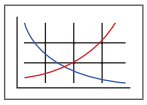

Sizes not shown are available upon request. When ordering, please follow the example below:	
Imperial:	0.5180", steel, 0 series = use Part No. **TAP0-13.16**
Metric:	13.16 mm, steel, 0 series = use Part No. **TAP0-13.16**

T-A Pro Drill Inserts

1 Series | Diameter Range: 0.6947" - 0.9596" (17.65 mm - 24.37 mm)

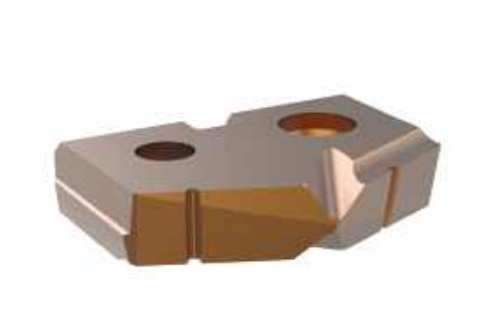

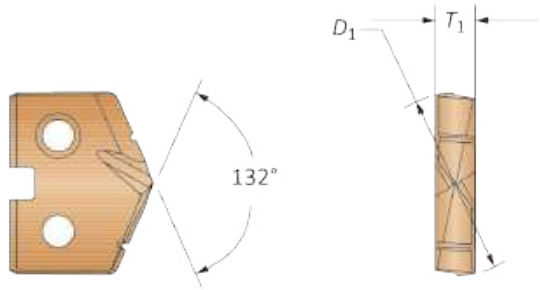

Insert					Carbide				HSS
					Part No.	Part No.	Part No.	Part No.	Part No.
Series	Fractional Equivalent	D_1 inch	D_1 mm	T_1	P	K	N	M	X
1-B	3/4	0.7500	19.05	5/32	TAP1-19.05	TAK1-19.05	TAN1-19.05	TAM1-19.05	TAX1-19.05
1-B	—	0.7520	19.10	5/32	TAP1-19.10	TAK1-19.10	TAN1-19.10	TAM1-19.10	TAX1-19.10
1-B	—	0.7559	19.20	5/32	TAP1-19.20	TAK1-19.20	TAN1-19.20	TAM1-19.20	TAX1-19.20
1-B	—	0.7579	19.25	5/32	TAP1-19.25	TAK1-19.25	TAN1-19.25	TAM1-19.25	TAX1-19.25
1-B	—	0.7598	19.30	5/32	TAP1-19.30	TAK1-19.30	TAN1-19.30	TAM1-19.30	TAX1-19.30
1-B	—	0.7638	19.40	5/32	TAP1-19.40	TAK1-19.40	TAN1-19.40	TAM1-19.40	TAX1-19.40
1-B	49/64	0.7657	19.45	5/32	TAP1-19.45	TAK1-19.45	TAN1-19.45	TAM1-19.45	TAX1-19.45
1-B	—	0.7677	19.50	5/32	TAP1-19.50	TAK1-19.50	TAN1-19.50	TAM1-19.50	TAX1-19.50
1-B	—	0.7717	19.60	5/32	TAP1-19.60	TAK1-19.60	TAN1-19.60	TAM1-19.60	TAX1-19.60
1-B	—	0.7756	19.70	5/32	TAP1-19.70	TAK1-19.70	TAN1-19.70	TAM1-19.70	TAX1-19.70
1-B	—	0.7795	19.80	5/32	TAP1-19.80	TAK1-19.80	TAN1-19.80	TAM1-19.80	TAX1-19.80
1-B	25/32	0.7811	19.84	5/32	TAP1-19.84	TAK1-19.84	TAN1-19.84	TAM1-19.84	TAX1-19.84
1-B	—	0.7835	19.90	5/32	TAP1-19.90	TAK1-19.90	TAN1-19.90	TAM1-19.90	TAX1-19.90
1-B	—	0.7874	20.00	5/32	TAP1-20.00	TAK1-20.00	TAN1-20.00	TAM1-20.00	TAX1-20.00
1-B	—	0.7913	20.10	5/32	TAP1-20.10	TAK1-20.10	TAN1-20.10	TAM1-20.10	TAX1-20.10
1-B	—	0.7953	20.20	5/32	TAP1-20.20	TAK1-20.20	TAN1-20.20	TAM1-20.20	TAX1-20.20
1-B	51/64	0.7969	20.24	5/32	TAP1-20.24	TAK1-20.24	TAN1-20.24	TAM1-20.24	TAX1-20.24
1-B	—	0.7992	20.30	5/32	TAP1-20.30	TAK1-20.30	TAN1-20.30	TAM1-20.30	TAX1-20.30
1-B	—	0.8031	20.40	5/32	TAP1-20.40	TAK1-20.40	TAN1-20.40	TAM1-20.40	TAX1-20.40
1-B	—	0.8071	20.50	5/32	TAP1-20.50	TAK1-20.50	TAN1-20.50	TAM1-20.50	TAX1-20.50

Inserts sold in multiples of 2.

Sub Series Holders (A, B, C, D)

Sub series holders are recommended when running carbide inserts toward the upper end of the series drill range, as well as in tougher applications requiring more insert support and holder strength. **NOTE:** Only specified sub series inserts should be used with equivalent or smaller sub series holders.

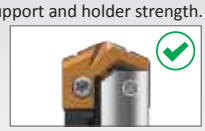

A Series Insert + A Series Holder

C Series Insert + A Series Holder

C Series Insert + C Series Holder

A Series Insert + C Series Holder

A25: 28 - 31

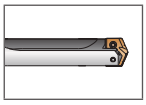

Key on A25: 1

A25: 50 - 57

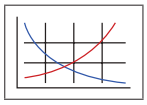

Sizes not shown are available upon request. When ordering, please follow the example below:	
Imperial:	0.5180", steel, 0 series = use Part No. **TAP0-13.16**
Metric:	13.16 mm, steel, 0 series = use Part No. **TAP0-13.16**

T-A Pro Drill Inserts

1 Series | Diameter Range: 0.6947" - 0.9596" (17.65 mm - 24.37 mm)

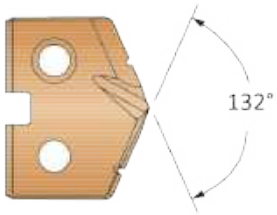

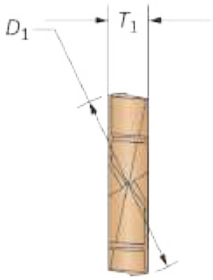

Insert					Carbide				HSS
					Part No.	Part No.	Part No.	Part No.	Part No.
Series	Fractional Equivalent	D_1 inch	D_1 mm	T_1	P	K	N	M	X
1-C	—	0.8110	20.60	5/32	TAP1-20.60	TAK1-20.60	TAN1-20.60	TAM1-20.60	TAX1-20.60
1-C	13/16	0.8126	20.64	5/32	TAP1-20.64	TAK1-20.64	TAN1-20.64	TAM1-20.64	TAX1-20.64
1-C	—	0.8150	20.70	5/32	TAP1-20.70	TAK1-20.70	TAN1-20.70	TAM1-20.70	TAX1-20.70
1-C	—	0.8189	20.80	5/32	TAP1-20.80	TAK1-20.80	TAN1-20.80	TAM1-20.80	TAX1-20.80
1-C	—	0.8228	20.90	5/32	TAP1-20.90	TAK1-20.90	TAN1-20.90	TAM1-20.90	TAX1-20.90
1-C	—	0.8268	21.00	5/32	TAP1-21.00	TAK1-21.00	TAN1-21.00	TAM1-21.00	TAX1-21.00
1-C	—	0.8307	21.10	5/32	TAP1-21.10	TAK1-21.10	TAN1-21.10	TAM1-21.10	TAX1-21.10
1-C	—	0.8346	21.20	5/32	TAP1-21.20	TAK1-21.20	TAN1-21.20	TAM1-21.20	TAX1-21.20
1-C	—	0.8386	21.30	5/32	TAP1-21.30	TAK1-21.30	TAN1-21.30	TAM1-21.30	TAX1-21.30
1-C	—	0.8425	21.40	5/32	TAP1-21.40	TAK1-21.40	TAN1-21.40	TAM1-21.40	TAX1-21.40
1-C	27/32	0.8437	21.43	5/32	TAP1-21.43	TAK1-21.43	TAN1-21.43	TAM1-21.43	TAX1-21.43
1-C	—	0.8465	21.50	5/32	TAP1-21.50	TAK1-21.50	TAN1-21.50	TAM1-21.50	TAX1-21.50
1-C	—	0.8504	21.60	5/32	TAP1-21.60	TAK1-21.60	TAN1-21.60	TAM1-21.60	TAX1-21.60
1-C	—	0.8543	21.70	5/32	TAP1-21.70	TAK1-21.70	TAN1-21.70	TAM1-21.70	TAX1-21.70
1-C	—	0.8583	21.80	5/32	TAP1-21.80	TAK1-21.80	TAN1-21.80	TAM1-21.80	TAX1-21.80
1-C	55/64	0.8594	21.83	5/32	TAP1-21.83	TAK1-21.83	TAN1-21.83	TAM1-21.83	TAX1-21.83
1-C	—	0.8622	21.90	5/32	TAP1-21.90	TAK1-21.90	TAN1-21.90	TAM1-21.90	TAX1-21.90
1-C	—	0.8661	22.00	5/32	TAP1-22.00	TAK1-22.00	TAN1-22.00	TAM1-22.00	TAX1-22.00
1-C	—	0.8701	22.10	5/32	TAP1-22.10	TAK1-22.10	TAN1-22.10	TAM1-22.10	TAX1-22.10
1-C	—	0.8740	22.20	5/32	TAP1-22.20	TAK1-22.20	TAN1-22.20	TAM1-22.20	TAX1-22.20
1-C	7/8	0.8752	22.23	5/32	TAP1-22.23	TAK1-22.23	TAN1-22.23	TAM1-22.23	TAX1-22.23
1-C	—	0.8780	22.30	5/32	TAP1-22.30	TAK1-22.30	TAN1-22.30	TAM1-22.30	TAX1-22.30
1-C	—	0.8819	22.40	5/32	TAP1-22.40	TAK1-22.40	TAN1-22.40	TAM1-22.40	TAX1-22.40
1-C	—	0.8858	22.50	5/32	TAP1-22.50	TAK1-22.50	TAN1-22.50	TAM1-22.50	TAX1-22.50
1-C	57/64	0.8906	22.62	5/32	TAP1-22.62	TAK1-22.62	TAN1-22.62	TAM1-22.62	TAX1-22.62
1-C	—	0.8937	22.70	5/32	TAP1-22.70	TAK1-22.70	TAN1-22.70	TAM1-22.70	TAX1-22.70
1-C	—	0.8976	22.80	5/32	TAP1-22.80	TAK1-22.80	TAN1-22.80	TAM1-22.80	TAX1-22.80

Inserts sold in multiples of 2.

Sub Series Holders (A, B, C, D)

Sub series holders are recommended when running carbide inserts toward the upper end of the series drill range, as well as in tougher applications requiring more insert support and holder strength. **NOTE:** Only specified sub series inserts should be used with equivalent or smaller sub series holders.

A Series Insert + A Series Holder

C Series Insert + A Series Holder

C Series Insert + C Series Holder

A Series Insert + C Series Holder

A25: 28 - 31

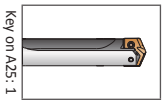

A25: 50 - 57

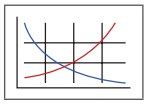

Sizes not shown are available upon request. When ordering, please follow the example below:	
Imperial:	0.5180", steel, 0 series = use Part No. **TAP0-13.16**
Metric:	13.16 mm, steel, 0 series = use Part No. **TAP0-13.16**

T-A Pro Drill Inserts

1 Series | Diameter Range: 0.6947" - 0.9596" (17.65 mm - 24.37 mm)

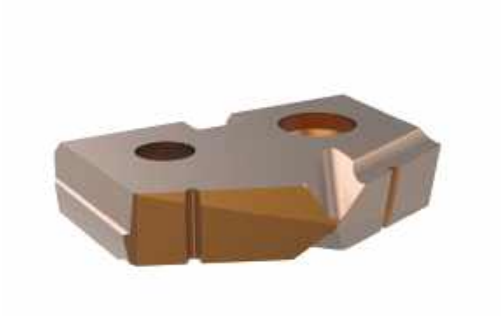

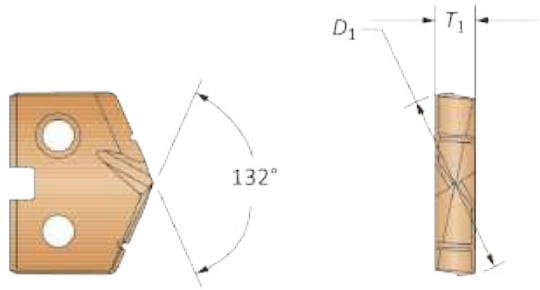

Insert					Carbide				HSS
					Part No.	Part No.	Part No.	Part No.	Part No.
Series	Fractional Equivalent	D_1 inch	D_1 mm	T_1	P	K	N	M	X
1-D	—	0.9016	22.90	5/32	TAP1-22.90	TAK1-22.90	TAN1-22.90	TAM1-22.90	TAX1-22.90
1-D	—	0.9055	23.00	5/32	TAP1-23.00	TAK1-23.00	TAN1-23.00	TAM1-23.00	TAX1-23.00
1-D	29/32	0.9063	23.02	5/32	TAP1-23.02	TAK1-23.02	TAN1-23.02	TAM1-23.02	TAX1-23.02
1-D	—	0.9094	23.10	5/32	TAP1-23.10	TAK1-23.10	TAN1-23.10	TAM1-23.10	TAX1-23.10
1-D	—	0.9134	23.20	5/32	TAP1-23.20	TAK1-23.20	TAN1-23.20	TAM1-23.20	TAX1-23.20
1-D	—	0.9173	23.30	5/32	TAP1-23.30	TAK1-23.30	TAN1-23.30	TAM1-23.30	TAX1-23.30
1-D	59/64	0.9220	23.42	5/32	TAP1-23.42	TAK1-23.42	TAN1-23.42	TAM1-23.42	TAX1-23.42
1-D	—	0.9252	23.50	5/32	TAP1-23.50	TAK1-23.50	TAN1-23.50	TAM1-23.50	TAX1-23.50
1-D	—	0.9291	23.60	5/32	TAP1-23.60	TAK1-23.60	TAN1-23.60	TAM1-23.60	TAX1-23.60
1-D	—	0.9331	23.70	5/32	TAP1-23.70	TAK1-23.70	TAN1-23.70	TAM1-23.70	TAX1-23.70
1-D	15/16	0.9374	23.81	5/32	TAP1-23.81	TAK1-23.81	TAN1-23.81	TAM1-23.81	TAX1-23.81
1-D	—	0.9409	23.90	5/32	TAP1-23.90	TAK1-23.90	TAN1-23.90	TAM1-23.90	TAX1-23.90
1-D	—	0.9449	24.00	5/32	TAP1-24.00	TAK1-24.00	TAN1-24.00	TAM1-24.00	TAX1-24.00
1-D	—	0.9488	24.10	5/32	TAP1-24.10	TAK1-24.10	TAN1-24.10	TAM1-24.10	TAX1-24.10
1-D	—	0.9528	24.20	5/32	TAP1-24.20	TAK1-24.20	TAN1-24.20	TAM1-24.20	TAX1-24.20
1-D	—	0.9567	24.30	5/32	TAP1-24.30	TAK1-24.30	TAN1-24.30	TAM1-24.30	TAX1-24.30

Inserts sold in multiples of 2.

Sub Series Holders (A, B, C, D)

Sub series holders are recommended when running carbide inserts toward the upper end of the series drill range, as well as in tougher applications requiring more insert support and holder strength. **NOTE:** Only specified sub series inserts should be used with equivalent or smaller sub series holders.

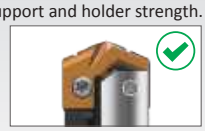

A Series Insert + A Series Holder

C Series Insert + A Series Holder

C Series Insert + C Series Holder

A Series Insert + C Series Holder

A25: 28 - 31

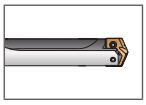

A25: 50 - 57

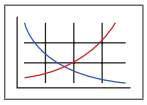

Key on A25: 1

Sizes not shown are available upon request. When ordering, please follow the example below:	
Imperial:	0.5180", steel, 0 series = use Part No. **TAP0-13.16**
Metric:	13.16 mm, steel, 0 series = use Part No. **TAP0-13.16**

T-A Pro Drill Holders

1 Series Imperial | Diameter Range: 0.6947" - 0.9596"

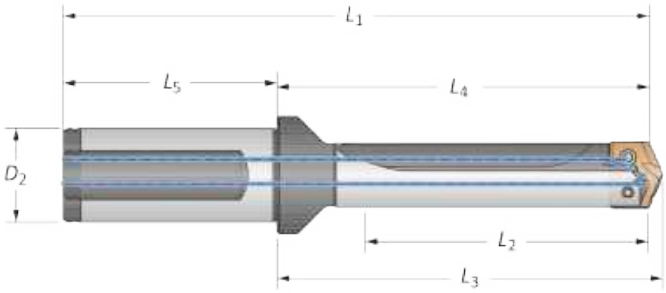

	Body						Shank			
	Length	Sub Series	L_2	L_4	L_3	L_1	L_5	D_2	Flat	Part No.
	Stub	A	0.825	2.224	2.364	4.504	2.280	1	Yes	**HTA1A01-100F**
	Stub	A	0.825	2.224	2.364	4.504	2.280	1	No	**HTA1A01-100C**
	Stub	B	0.825	2.224	2.364	4.504	2.280	1	Yes	**HTA1B01-100F**
	Stub	B	0.825	2.224	2.364	4.504	2.280	1	No	**HTA1B01-100C**
	Stub	C	0.825	2.224	2.364	4.504	2.280	1	Yes	**HTA1C01-100F**
	Stub	C	0.825	2.224	2.364	4.504	2.280	1	No	**HTA1C01-100C**
	Stub	D	0.825	2.224	2.364	4.504	2.280	1	Yes	**HTA1D01-100F**
	Stub	D	0.825	2.224	2.364	4.504	2.280	1	No	**HTA1D01-100C**
	3xD	A	2.475	3.973	4.113	6.253	2.280	1	Yes	**HTA1A03-100F**
	3xD	A	2.475	3.973	4.113	6.253	2.280	1	No	**HTA1A03-100C**
	3xD	B	2.475	3.973	4.113	6.253	2.280	1	Yes	**HTA1B03-100F**
	3xD	B	2.475	3.973	4.113	6.253	2.280	1	No	**HTA1B03-100C**
	3xD	C	2.475	3.973	4.113	6.253	2.280	1	Yes	**HTA1C03-100F**
	3xD	C	2.475	3.973	4.113	6.253	2.280	1	No	**HTA1C03-100C**
	3xD	D	2.475	3.973	4.113	6.253	2.280	1	Yes	**HTA1D03-100F**
i	3xD	D	2.475	3.973	4.113	6.253	2.280	1	No	**HTA1D03-100C**
	5xD	A	4.125	5.623	5.763	7.903	2.280	1	Yes	**HTA1A05-100F**
	5xD	A	4.125	5.623	5.763	7.903	2.280	1	No	**HTA1A05-100C**
	5xD	B	4.125	5.623	5.763	7.903	2.280	1	Yes	**HTA1B05-100F**
	5xD	B	4.125	5.623	5.763	7.903	2.280	1	No	**HTA1B05-100C**
	5xD	C	4.125	5.623	5.763	7.903	2.280	1	Yes	**HTA1C05-100F**
	5xD	C	4.125	5.623	5.763	7.903	2.280	1	No	**HTA1C05-100C**
	5xD	D	4.125	5.623	5.763	7.903	2.280	1	Yes	**HTA1D05-100F**
	5xD	D	4.125	5.623	5.763	7.903	2.280	1	No	**HTA1D05-100C**
	7xD	A	5.775	7.273	7.413	9.553	2.280	1	Yes	**HTA1A07-100F**
	7xD	A	5.775	7.273	7.413	9.553	2.280	1	No	**HTA1A07-100C**
	7xD	B	5.775	7.273	7.413	9.553	2.280	1	Yes	**HTA1B07-100F**
	7xD	B	5.775	7.273	7.413	9.553	2.280	1	No	**HTA1B07-100C**
	7xD	C	5.775	7.273	7.413	9.553	2.280	1	Yes	**HTA1C07-100F**
	7xD	C	5.775	7.273	7.413	9.553	2.280	1	No	**HTA1C07-100C**
	7xD	D	5.775	7.273	7.413	9.553	2.280	1	Yes	**HTA1D07-100F**
	7xD	D	5.775	7.273	7.413	9.553	2.280	1	No	**HTA1D07-100C**

Sub Series	1 Series Holder Diameter Range	
	Imperial (inch)	Metric (mm)
1A	0.6947" - 0.9596"	17.65 mm - 24.37 mm
1B	0.7499" - 0.9596"	19.05 mm - 24.37 mm
1C	0.8109" - 0.9596"	20.60 mm - 24.37 mm
1D	0.9014" - 0.9596"	22.90 mm - 24.37 mm

Connection Accessories

	Insert Screws	Nylon Locking Screws	Insert Driver	Preset Torque Hand Driver	Replacement Tips	Admissible Tightening Torque*
A/B	7375-IP9-1	7375N-IP9-1	8IP-9	8IP-9TL	8IP-9B	27.0 in-lbs (305 N-cm)
C/D	739-IP9-1	739N-IP9-1	8IP-9	8IP-9TL	8IP-9B	27.0 in-lbs (305 N-cm)

*Tightening torques are calculated with a friction coefficient of μ = 0.14 and develop 90% of ultimate yield strength.

⚠ WARNING Refer to Speed and Feed charts for recommended adjustments to speeds and feeds. Refer to page **A25: 60** for deep hole drilling guidelines in this section of the catalog. Visit **www.alliedmachine.com/DeepHoleGuidelines** for the most up-to-date information and procedures. Factory technical assistance is available for your specific applications through our Application Engineering department.
ext: **7611** | *email:* **appeng@alliedmachine.com**

A25: 24 - 27

A25: 50 - 57

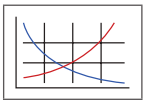

ⓘ = Imperial (in)
ⓜ = Metric (mm)
Screws sold in multiples of 10.

T-A Pro Drill Holders

1 Series Imperial | Diameter Range: 0.6947 - 0.9596"

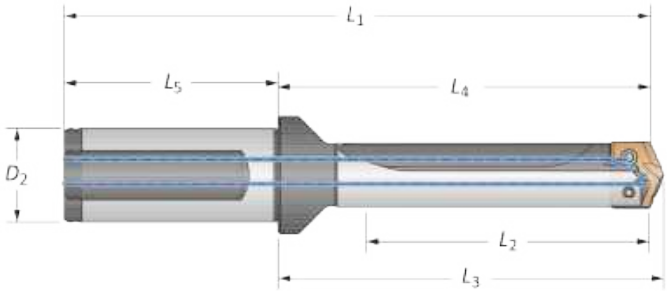

	Body						Shank			
	Length	Sub Series	L_2	L_4	L_3	L_1	L_5	D_2	Flat	Part No.
	10xD	A	8.250	9.748	9.888	12.028	2.280	1	Yes	HTA1A10-100F
	10xD	A	8.250	9.748	9.888	12.028	2.280	1	No	HTA1A10-100C
	10xD	B	8.250	9.748	9.888	12.028	2.280	1	Yes	HTA1B10-100F
	10xD	B	8.250	9.748	9.888	12.028	2.280	1	No	HTA1B10-100C
	10xD	C	8.250	9.748	9.888	12.028	2.280	1	Yes	HTA1C10-100F
	10xD	C	8.250	9.748	9.888	12.028	2.280	1	No	HTA1C10-100C
	10xD	D	8.250	9.748	9.888	12.028	2.280	1	Yes	HTA1D10-100F
	10xD	D	8.250	9.748	9.888	12.028	2.280	1	No	HTA1D10-100C
	12xD	A	9.900	11.398	11.538	13.678	2.280	1	Yes	HTA1A12-100F
	12xD	A	9.900	11.398	11.538	13.678	2.280	1	No	HTA1A12-100C
	12xD	B	9.900	11.398	11.538	13.678	2.280	1	Yes	HTA1B12-100F
	12xD	B	9.900	11.398	11.538	13.678	2.280	1	No	HTA1B12-100C
	12xD	C	9.900	11.398	11.538	13.678	2.280	1	Yes	HTA1C12-100F
	12xD	C	9.900	11.398	11.538	13.678	2.280	1	No	HTA1C12-100C
	12xD	D	9.900	11.398	11.538	13.678	2.280	1	Yes	HTA1D12-100F
	12xD	D	9.900	11.398	11.538	13.678	2.280	1	No	HTA1D12-100C
	15xD	A	12.375	13.873	14.013	16.153	2.280	1	Yes	HTA1A15-100F
	15xD	A	12.375	13.873	14.013	16.153	2.280	1	No	HTA1A15-100C
	15xD	B	12.375	13.873	14.013	16.153	2.280	1	Yes	HTA1B15-100F
	15xD	B	12.375	13.873	14.013	16.153	2.280	1	No	HTA1B15-100C
	15xD	C	12.375	13.873	14.013	16.153	2.280	1	Yes	HTA1C15-100F
	15xD	C	12.375	13.873	14.013	16.153	2.280	1	No	HTA1C15-100C
	15xD	D	12.375	13.873	14.013	16.153	2.280	1	Yes	HTA1D15-100F
	15xD	D	12.375	13.873	14.013	16.153	2.280	1	No	HTA1D15-100C

Sub Series	1 Series Holder Diameter Range	
	Imperial (inch)	Metric (mm)
1A	0.6947" - 0.9596"	17.65 mm - 24.37 mm
1B	0.7499" - 0.9596"	19.05 mm - 24.37 mm
1C	0.8109" - 0.9596"	20.60 mm - 24.37 mm
1D	0.9014" - 0.9596"	22.90 mm - 24.37 mm

Connection Accessories

	Insert Screws	Nylon Locking Screws	Insert Driver	Preset Torque Hand Driver	Replacement Tips	Admissible Tightening Torque*
A/B	7375-IP9-1	7375N-IP9-1	8IP-9	8IP-9TL	8IP-9B	27.0 in-lbs (305 N-cm)
C/D	739-IP9-1	739N-IP9-1	8IP-9	8IP-9TL	8IP-9B	27.0 in-lbs (305 N-cm)

*Tightening torques are calculated with a friction coefficient of μ = 0.14 and develop 90% of ultimate yield strength.

WARNING Refer to Speed and Feed charts for recommended adjustments to speeds and feeds. Refer to page **A25: 60** for deep hole drilling guidelines in this section of the catalog. Visit **www.alliedmachine.com/DeepHoleGuidelines** for the most up-to-date information and procedures. Factory technical assistance is available for your specific applications through our Application Engineering department.
ext: **7611** | *email:* **appeng@alliedmachine.com**

A25: 24 - 27

Key on A25: 1

A25: 50 - 57

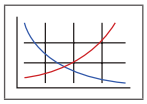

ⓘ = Imperial (in)
ⓜ = Metric (mm)
Screws sold in multiples of 10.

T-A Pro Drill Holders

1 Series Metric | Diameter Range: 17.65 mm - 24.37 mm

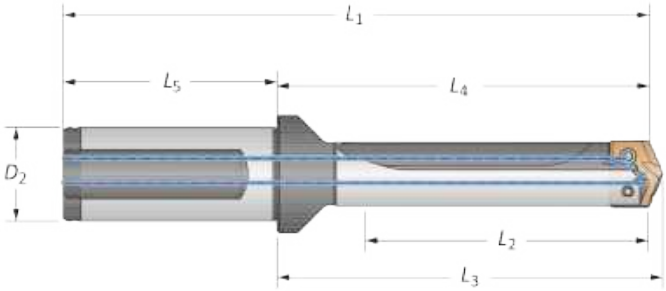

	Body						Shank			
	Length	Sub Series	L_2	L_4	L_3	L_1	L_5	D_2	Flat	Part No.
	Stub	A	21.0	56.5	60.0	112.5	56.0	25	Yes	**HTA1A01-25FM**
	Stub	A	21.0	56.5	60.0	112.5	56.0	25	No	**HTA1A01-25CM**
	Stub	B	21.0	56.5	60.0	112.5	56.0	25	Yes	**HTA1B01-25FM**
	Stub	B	21.0	56.5	60.0	112.5	56.0	25	No	**HTA1B01-25CM**
	Stub	C	21.0	56.5	60.0	112.5	56.0	25	Yes	**HTA1C01-25FM**
	Stub	C	21.0	56.5	60.0	112.5	56.0	25	No	**HTA1C01-25CM**
	Stub	D	21.0	56.5	60.0	112.5	56.0	25	Yes	**HTA1D01-25FM**
	Stub	D	21.0	56.5	60.0	112.5	56.0	25	No	**HTA1D01-25CM**
	3xD	A	62.9	100.9	104.5	156.9	56.0	25	Yes	**HTA1A03-25FM**
	3xD	A	62.9	100.9	104.5	156.9	56.0	25	No	**HTA1A03-25CM**
	3xD	B	62.9	100.9	104.5	156.9	56.0	25	Yes	**HTA1B03-25FM**
	3xD	B	62.9	100.9	104.5	156.9	56.0	25	No	**HTA1B03-25CM**
	3xD	C	62.9	100.9	104.5	156.9	56.0	25	Yes	**HTA1C03-25FM**
	3xD	C	62.9	100.9	104.5	156.9	56.0	25	No	**HTA1C03-25CM**
	3xD	D	62.9	100.9	104.5	156.9	56.0	25	Yes	**HTA1D03-25FM**
ⓜ	3xD	D	62.9	100.9	104.5	156.9	56.0	25	No	**HTA1D03-25CM**
	5xD	A	104.8	142.8	146.4	198.8	56.0	25	Yes	**HTA1A05-25FM**
	5xD	A	104.8	142.8	146.4	198.8	56.0	25	No	**HTA1A05-25CM**
	5xD	B	104.8	142.8	146.4	198.8	56.0	25	Yes	**HTA1B05-25FM**
	5xD	B	104.8	142.8	146.4	198.8	56.0	25	No	**HTA1B05-25CM**
	5xD	C	104.8	142.8	146.4	198.8	56.0	25	Yes	**HTA1C05-25FM**
	5xD	C	104.8	142.8	146.4	198.8	56.0	25	No	**HTA1C05-25CM**
	5xD	D	104.8	142.8	146.4	198.8	56.0	25	Yes	**HTA1D05-25FM**
	5xD	D	104.8	142.8	146.4	198.8	56.0	25	No	**HTA1D05-25CM**
	7xD	A	146.7	184.7	188.3	240.7	56.0	25	Yes	**HTA1A07-25FM**
	7xD	A	146.7	184.7	188.3	240.7	56.0	25	No	**HTA1A07-25CM**
	7xD	B	146.7	184.7	188.3	240.7	56.0	25	Yes	**HTA1B07-25FM**
	7xD	B	146.7	184.7	188.3	240.7	56.0	25	No	**HTA1B07-25CM**
	7xD	C	146.7	184.7	188.3	240.7	56.0	25	Yes	**HTA1C07-25FM**
	7xD	C	146.7	184.7	188.3	240.7	56.0	25	No	**HTA1C07-25CM**
	7xD	D	146.7	184.7	188.3	240.7	56.0	25	Yes	**HTA1D07-25FM**
	7xD	D	146.7	184.7	188.3	240.7	56.0	25	No	**HTA1D07-25CM**

Sub Series	1 Series Holder Diameter Range Imperial (inch)	Metric (mm)
1A	0.6947" - 0.9596"	17.65 mm - 24.37 mm
1B	0.7499" - 0.9596"	19.05 mm - 24.37 mm
1C	0.8109" - 0.9596"	20.60 mm - 24.37 mm
1D	0.9014" - 0.9596"	22.90 mm - 24.37 mm

Connection Accessories

	Insert Screws	Nylon Locking Screws	Insert Driver	Preset Torque Hand Driver	Replacement Tips	Admissible Tightening Torque*
A/B	7375-IP9-1	7375N-IP9-1	8IP-9	8IP-9TL	8IP-9B	27.0 in-lbs (305 N-cm)
C/D	739-IP9-1	739N-IP9-1	8IP-9	8IP-9TL	8IP-9B	27.0 in-lbs (305 N-cm)

*Tightening torques are calculated with a friction coefficient of μ = 0.14 and develop 90% of ultimate yield strength.

⚠ WARNING Refer to Speed and Feed charts for recommended adjustments to speeds and feeds. Refer to page **A25: 60** for deep hole drilling guidelines in this section of the catalog. Visit **www.alliedmachine.com/DeepHoleGuidelines** for the most up-to-date information and procedures. Factory technical assistance is available for your specific applications through our Application Engineering department.
ext: **7611** | *email:* **appeng@alliedmachine.com**

A25: 24 - 27

A25: 50 - 57

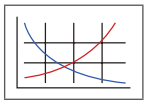

ⓘ = Imperial (in)
ⓜ = Metric (mm)
Screws sold in multiples of 10.

T-A Pro Drill Holders

1 Series Metric | Diameter Range: 17.65 mm - 24.37 mm

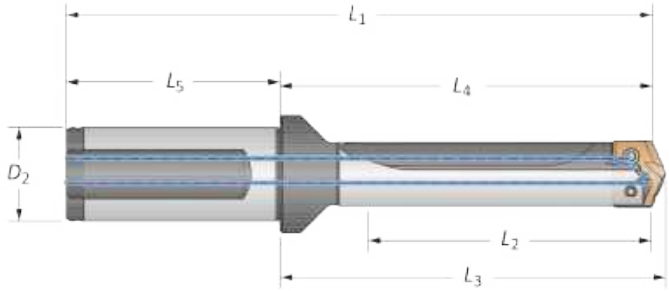

	Body						Shank			
	Length	Sub Series	L_2	L_4	L_3	L_1	L_5	D_2	Flat	Part No.
m	10xD	A	209.6	247.6	251.2	303.6	56.0	25	Yes	⚠HTA1A10-25FM
	10xD	A	209.6	247.6	251.2	303.6	56.0	25	No	⚠HTA1A10-25CM
	10xD	B	209.6	247.6	251.2	303.6	56.0	25	Yes	⚠HTA1B10-25FM
	10xD	B	209.6	247.6	251.2	303.6	56.0	25	No	⚠HTA1B10-25CM
	10xD	C	209.6	247.6	251.2	303.6	56.0	25	Yes	⚠HTA1C10-25FM
	10xD	C	209.6	247.6	251.2	303.6	56.0	25	No	⚠HTA1C10-25CM
	10xD	D	209.6	247.6	251.2	303.6	56.0	25	Yes	⚠HTA1D10-25FM
	10xD	D	209.6	247.6	251.2	303.6	56.0	25	No	⚠HTA1D10-25CM
	12xD	A	251.5	289.5	293.1	345.5	56.0	25	Yes	⚠HTA1A12-25FM
	12xD	A	251.5	289.5	293.1	345.5	56.0	25	No	⚠HTA1A12-25CM
	12xD	B	251.5	289.5	293.1	345.5	56.0	25	Yes	⚠HTA1B12-25FM
	12xD	B	251.5	289.5	293.1	345.5	56.0	25	No	⚠HTA1B12-25CM
	12xD	C	251.5	289.5	293.1	345.5	56.0	25	Yes	⚠HTA1C12-25FM
	12xD	C	251.5	289.5	293.1	345.5	56.0	25	No	⚠HTA1C12-25CM
	12xD	D	251.5	289.5	293.1	345.5	56.0	25	Yes	⚠HTA1D12-25FM
	12xD	D	251.5	289.5	293.1	345.5	56.0	25	No	⚠HTA1D12-25CM
	15xD	A	314.3	352.4	355.9	408.4	56.0	25	Yes	⚠HTA1A15-25FM
	15xD	A	314.3	352.4	355.9	408.4	56.0	25	No	⚠HTA1A15-25CM
	15xD	B	314.3	352.4	355.9	408.4	56.0	25	Yes	⚠HTA1B15-25FM
	15xD	B	314.3	352.4	355.9	408.4	56.0	25	No	⚠HTA1B15-25CM
	15xD	C	314.3	352.4	355.9	408.4	56.0	25	Yes	⚠HTA1C15-25FM
	15xD	C	314.3	352.4	355.9	408.4	56.0	25	No	⚠HTA1C15-25CM
	15xD	D	314.3	352.4	355.9	408.4	56.0	25	Yes	⚠HTA1D15-25FM
	15xD	D	314.3	352.4	355.9	408.4	56.0	25	No	⚠HTA1D15-25CM

Sub Series	1 Series Holder Diameter Range	
	Imperial (inch)	Metric (mm)
1A	0.6947" - 0.9596"	17.65 mm - 24.37 mm
1B	0.7499" - 0.9596"	19.05 mm - 24.37 mm
1C	0.8109" - 0.9596"	20.60 mm - 24.37 mm
1D	0.9014" - 0.9596"	22.90 mm - 24.37 mm

Connection Accessories

	Insert Screws	Nylon Locking Screws	Insert Driver	Preset Torque Hand Driver	Replacement Tips	Admissible Tightening Torque*
A/B	7375-IP9-1	7375N-IP9-1	8IP-9	8IP-9TL	8IP-9B	27.0 in-lbs (305 N-cm)
C/D	739-IP9-1	739N-IP9-1	8IP-9	8IP-9TL	8IP-9B	27.0 in-lbs (305 N-cm)

*Tightening torques are calculated with a friction coefficient of μ = 0.14 and develop 90% of ultimate yield strength.

⚠ WARNING Refer to Speed and Feed charts for recommended adjustments to speeds and feeds. Refer to page **A25: 60** for deep hole drilling guidelines in this section of the catalog. Visit **www.alliedmachine.com/DeepHoleGuidelines** for the most up-to-date information and procedures. Factory technical assistance is available for your specific applications through our Application Engineering department.
ext: **7611** | *email:* **appeng@alliedmachine.com**

A25: 24 - 27

Key on A25: 1

A25: 50 - 57

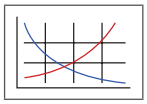

ⓘ = Imperial (in)
ⓜ = Metric (mm)
Screws sold in multiples of 10.

T-A Pro Drill Inserts

2 Series | Diameter Range: 0.9597" - 1.3797" (24.38 mm - 35.04 mm)

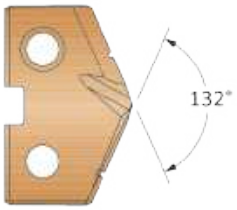

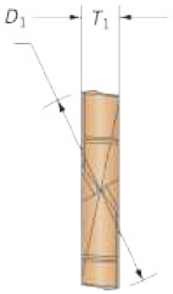

Insert					Carbide				HSS
					Part No.	Part No.	Part No.	Part No.	Part No.
Series	Fractional Equivalent	D_1 inch	D_1 mm	T_1	P	K	N	M	X
2-A	—	0.9606	24.40	3/16	TAP2-24.40	TAK2-24.40	TAN2-24.40	TAM2-24.40	TAX2-24.40
2-A	—	0.9646	24.50	3/16	TAP2-24.50	TAK2-24.50	TAN2-24.50	TAM2-24.50	TAX2-24.50
2-A	31/32	0.9689	24.61	3/16	TAP2-24.61	TAK2-24.61	TAN2-24.61	TAM2-24.61	TAX2-24.61
2-A	—	0.9724	24.70	3/16	TAP2-24.70	TAK2-24.70	TAN2-24.70	TAM2-24.70	TAX2-24.70
2-A	—	0.9764	24.80	3/16	TAP2-24.80	TAK2-24.80	TAN2-24.80	TAM2-24.80	TAX2-24.80
2-A	—	0.9803	24.90	3/16	TAP2-24.90	TAK2-24.90	TAN2-24.90	TAM2-24.90	TAX2-24.90
2-A	63/64	0.9843	25.00	3/16	TAP2-25.00	TAK2-25.00	TAN2-25.00	TAM2-25.00	TAX2-25.00
2-A	—	0.9882	25.10	3/16	TAP2-25.10	TAK2-25.10	TAN2-25.10	TAM2-25.10	TAX2-25.10
2-A	—	0.9921	25.20	3/16	TAP2-25.20	TAK2-25.20	TAN2-25.20	TAM2-25.20	TAX2-25.20
2-A	—	0.9961	25.30	3/16	TAP2-25.30	TAK2-25.30	TAN2-25.30	TAM2-25.30	TAX2-25.30

Inserts sold in multiples of 2.

Sub Series Holders (A, B, C, D)

Sub series holders are recommended when running carbide inserts toward the upper end of the series drill range, as well as in tougher applications requiring more insert support and holder strength. **NOTE:** Only specified sub series inserts should be used with equivalent or smaller sub series holders.

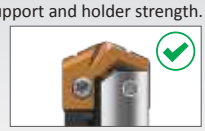

A Series Insert + A Series Holder

C Series Insert + A Series Holder

C Series Insert + C Series Holder

A Series Insert + C Series Holder

A25: 36 - 39

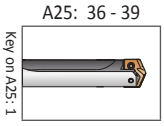

A25: 50 - 57

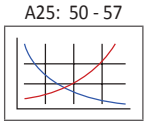

Sizes not shown are available upon request. When ordering, please follow the example below:	
Imperial:	0.5180", steel, 0 series = use Part No. **TAP0-13.16**
Metric:	13.16 mm, steel, 0 series = use Part No. **TAP0-13.16**

T-A Pro Drill Inserts

2 Series | Diameter Range: 0.9597" - 1.3797" (24.38 mm - 35.04 mm)

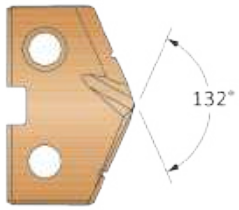

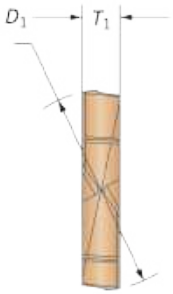

Insert					Carbide				HSS
					Part No.	Part No.	Part No.	Part No.	Part No.
Series	Fractional Equivalent	D_1 inch	D_1 mm	T_1	P	K	N	M	X
2-B	1	1.0000	25.40	3/16	TAP2-25.40	TAK2-25.40	TAN2-25.40	TAM2-25.40	TAX2-25.40
2-B	—	1.0039	25.50	3/16	TAP2-25.50	TAK2-25.50	TAN2-25.50	TAM2-25.50	TAX2-25.50
2-B	—	1.0079	25.60	3/16	TAP2-25.60	TAK2-25.60	TAN2-25.60	TAM2-25.60	TAX2-25.60
2-B	—	1.0118	25.70	3/16	TAP2-25.70	TAK2-25.70	TAN2-25.70	TAM2-25.70	TAX2-25.70
2-B	—	1.0150	25.78	3/16	TAP2-25.78	TAK2-25.78	TAN2-25.78	TAM2-25.78	TAX2-25.78
2-B	—	1.0197	25.90	3/16	TAP2-25.90	TAK2-25.90	TAN2-25.90	TAM2-25.90	TAX2-25.90
2-B	—	1.0236	26.00	3/16	TAP2-26.00	TAK2-26.00	TAN2-26.00	TAM2-26.00	TAX2-26.00
2-B	—	1.0276	26.10	3/16	TAP2-26.10	TAK2-26.10	TAN2-26.10	TAM2-26.10	TAX2-26.10
2-B	1-1/32	1.0315	26.20	3/16	TAP2-26.20	TAK2-26.20	TAN2-26.20	TAM2-26.20	TAX2-26.20
2-B	—	1.0354	26.30	3/16	TAP2-26.30	TAK2-26.30	TAN2-26.30	TAM2-26.30	TAX2-26.30
2-B	—	1.0394	26.40	3/16	TAP2-26.40	TAK2-26.40	TAN2-26.40	TAM2-26.40	TAX2-26.40
2-B	—	1.0433	26.50	3/16	TAP2-26.50	TAK2-26.50	TAN2-26.50	TAM2-26.50	TAX2-26.50
2-B	—	1.0461	26.57	3/16	TAP2-26.57	TAK2-26.57	TAN2-26.57	TAM2-26.57	TAX2-26.57
2-B	1-3/64	1.0469	26.59	3/16	TAP2-26.59	TAK2-26.59	TAN2-26.59	TAM2-26.59	TAX2-26.59
2-B	—	1.0472	26.60	3/16	TAP2-26.60	TAK2-26.60	TAN2-26.60	TAM2-26.60	TAX2-26.60
2-B	—	1.0512	26.70	3/16	TAP2-26.70	TAK2-26.70	TAN2-26.70	TAM2-26.70	TAX2-26.70
2-B	—	1.0551	26.80	3/16	TAP2-26.80	TAK2-26.80	TAN2-26.80	TAM2-26.80	TAX2-26.80
2-B	—	1.0591	26.90	3/16	TAP2-26.90	TAK2-26.90	TAN2-26.90	TAM2-26.90	TAX2-26.90
2-B	1-1/16	1.0626	26.99	3/16	TAP2-26.99	TAK2-26.99	TAN2-26.99	TAM2-26.99	TAX2-26.99
2-B	—	1.0630	27.00	3/16	TAP2-27.00	TAK2-27.00	TAN2-27.00	TAM2-27.00	TAX2-27.00
2-B	—	1.0669	27.10	3/16	TAP2-27.10	TAK2-27.10	TAN2-27.10	TAM2-27.10	TAX2-27.10
2-B	—	1.0709	27.20	3/16	TAP2-27.20	TAK2-27.20	TAN2-27.20	TAM2-27.20	TAX2-27.20
2-B	—	1.0748	27.30	3/16	TAP2-27.30	TAK2-27.30	TAN2-27.30	TAM2-27.30	TAX2-27.30
2-B	—	1.0787	27.40	3/16	TAP2-27.40	TAK2-27.40	TAN2-27.40	TAM2-27.40	TAX2-27.40
2-B	—	1.0827	27.50	3/16	TAP2-27.50	TAK2-27.50	TAN2-27.50	TAM2-27.50	TAX2-27.50
2-B	—	1.0866	27.60	3/16	TAP2-27.60	TAK2-27.60	TAN2-27.60	TAM2-27.60	TAX2-27.60
2-B	—	1.0906	27.70	3/16	TAP2-27.70	TAK2-27.70	TAN2-27.70	TAM2-27.70	TAX2-27.70
2-B	1-3/32	1.0937	27.78	3/16	TAP2-27.78	TAK2-27.78	TAN2-27.78	TAM2-27.78	TAX2-27.78
2-B	—	1.0984	27.90	3/16	TAP2-27.90	TAK2-27.90	TAN2-27.90	TAM2-27.90	TAX2-27.90
2-B	—	1.1024	28.00	3/16	TAP2-28.00	TAK2-28.00	TAN2-28.00	TAM2-28.00	TAX2-28.00
2-B	—	1.1063	28.10	3/16	TAP2-28.10	TAK2-28.10	TAN2-28.10	TAM2-28.10	TAX2-28.10
2-B	1-7/64	1.1091	28.17	3/16	TAP2-28.17	TAK2-28.17	TAN2-28.17	TAM2-28.17	TAX2-28.17
2-B	—	1.1102	28.20	3/16	TAP2-28.20	TAK2-28.20	TAN2-28.20	TAM2-28.20	TAX2-28.20
2-B	—	1.1142	28.30	3/16	TAP2-28.30	TAK2-28.30	TAN2-28.30	TAM2-28.30	TAX2-28.30
2-B	—	1.1181	28.40	3/16	TAP2-28.40	TAK2-28.40	TAN2-28.40	TAM2-28.40	TAX2-28.40

Inserts sold in multiples of 2.

Sub Series Holders (A, B, C, D)

Sub series holders are recommended when running carbide inserts toward the upper end of the series drill range, as well as in tougher applications requiring more insert support and holder strength. **NOTE:** Only specified sub series inserts should be used with equivalent or smaller sub series holders.

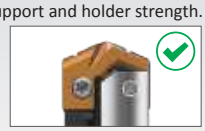

A Series Insert + A Series Holder

C Series Insert + A Series Holder

C Series Insert + C Series Holder

A Series Insert + C Series Holder

A25: 36 - 39

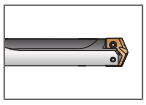

Key on A25: 1

A25: 50 - 57

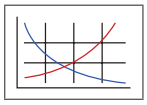

Sizes not shown are available upon request.
When ordering, please follow the example below:

Imperial:	0.5180", steel, 0 series = use Part No. **TAP0-13.16**
Metric:	13.16 mm, steel, 0 series = use Part No. **TAP0-13.16**

T-A Pro Drill Inserts

2 Series | Diameter Range: 0.9597" - 1.3797" (24.38 mm - 35.04 mm)

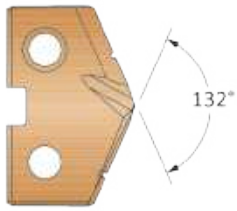

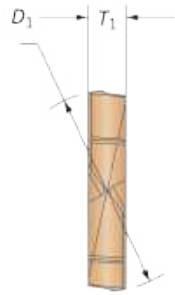

Insert					Carbide				HSS
					Part No.	Part No.	Part No.	Part No.	Part No.
Series	Fractional Equivalent	D_1 inch	D_1 mm	T_1	P	K	N	M	X
2-C	—	1.1220	28.50	3/16	TAP2-28.50	TAK2-28.50	TAN2-28.50	TAM2-28.50	TAX2-28.50
2-C	1-1/8	1.1252	28.58	3/16	TAP2-28.58	TAK2-28.58	TAN2-28.58	TAM2-28.58	TAX2-28.58
2-C	—	1.1299	28.70	3/16	TAP2-28.70	TAK2-28.70	TAN2-28.70	TAM2-28.70	TAX2-28.70
2-C	—	1.1339	28.80	3/16	TAP2-28.80	TAK2-28.80	TAN2-28.80	TAM2-28.80	TAX2-28.80
2-C	—	1.1378	28.90	3/16	TAP2-28.90	TAK2-28.90	TAN2-28.90	TAM2-28.90	TAX2-28.90
2-C	—	1.1417	29.00	3/16	TAP2-29.00	TAK2-29.00	TAN2-29.00	TAM2-29.00	TAX2-29.00
2-C	—	1.1457	29.10	3/16	TAP2-29.10	TAK2-29.10	TAN2-29.10	TAM2-29.10	TAX2-29.10
2-C	—	1.1496	29.20	3/16	TAP2-29.20	TAK2-29.20	TAN2-29.20	TAM2-29.20	TAX2-29.20
2-C	—	1.1535	29.30	3/16	TAP2-29.30	TAK2-29.30	TAN2-29.30	TAM2-29.30	TAX2-29.30
2-C	1-5/32	1.1563	29.37	3/16	TAP2-29.37	TAK2-29.37	TAN2-29.37	TAM2-29.37	TAX2-29.37
2-C	—	1.1575	29.40	3/16	TAP2-29.40	TAK2-29.40	TAN2-29.40	TAM2-29.40	TAX2-29.40
2-C	—	1.1614	29.50	3/16	TAP2-29.50	TAK2-29.50	TAN2-29.50	TAM2-29.50	TAX2-29.50
2-C	—	1.1654	29.60	3/16	TAP2-29.60	TAK2-29.60	TAN2-29.60	TAM2-29.60	TAX2-29.60
2-C	—	1.1693	29.70	3/16	TAP2-29.70	TAK2-29.70	TAN2-29.70	TAM2-29.70	TAX2-29.70
2-C	—	1.1732	29.80	3/16	TAP2-29.80	TAK2-29.80	TAN2-29.80	TAM2-29.80	TAX2-29.80
2-C	—	1.1772	29.90	3/16	TAP2-29.90	TAK2-29.90	TAN2-29.90	TAM2-29.90	TAX2-29.90
2-C	—	1.1811	30.00	3/16	TAP2-30.00	TAK2-30.00	TAN2-30.00	TAM2-30.00	TAX2-30.00
2-C	—	1.1850	30.10	3/16	TAP2-30.10	TAK2-30.10	TAN2-30.10	TAM2-30.10	TAX2-30.10
2-C	1-3/16	1.1874	30.16	3/16	TAP2-30.16	TAK2-30.16	TAN2-30.16	TAM2-30.16	TAX2-30.16
2-C	—	1.1890	30.20	3/16	TAP2-30.20	TAK2-30.20	TAN2-30.20	TAM2-30.20	TAX2-30.20
2-C	—	1.1929	30.30	3/16	TAP2-30.30	TAK2-30.30	TAN2-30.30	TAM2-30.30	TAX2-30.30
2-C	—	1.1969	30.40	3/16	TAP2-30.40	TAK2-30.40	TAN2-30.40	TAM2-30.40	TAX2-30.40
2-C	—	1.2008	30.50	3/16	TAP2-30.50	TAK2-30.50	TAN2-30.50	TAM2-30.50	TAX2-30.50
2-C	—	1.2047	30.60	3/16	TAP2-30.60	TAK2-30.60	TAN2-30.60	TAM2-30.60	TAX2-30.60
2-C	—	1.2087	30.70	3/16	TAP2-30.70	TAK2-30.70	TAN2-30.70	TAM2-30.70	TAX2-30.70
2-C	—	1.2126	30.80	3/16	TAP2-30.80	TAK2-30.80	TAN2-30.80	TAM2-30.80	TAX2-30.80
2-C	—	1.2165	30.90	3/16	TAP2-30.90	TAK2-30.90	TAN2-30.90	TAM2-30.90	TAX2-30.90
2-C	1-7/32	1.2189	30.96	3/16	TAP2-30.96	TAK2-30.96	TAN2-30.96	TAM2-30.96	TAX2-30.96
2-C	—	1.2205	31.00	3/16	TAP2-31.00	TAK2-31.00	TAN2-31.00	TAM2-31.00	TAX2-31.00
2-C	—	1.2244	31.10	3/16	TAP2-31.10	TAK2-31.10	TAN2-31.10	TAM2-31.10	TAX2-31.10
2-C	—	1.2283	31.20	3/16	TAP2-31.20	TAK2-31.20	TAN2-31.20	TAM2-31.20	TAX2-31.20
2-C	—	1.2323	31.30	3/16	TAP2-31.30	TAK2-31.30	TAN2-31.30	TAM2-31.30	TAX2-31.30
2-C	—	1.2362	31.40	3/16	TAP2-31.40	TAK2-31.40	TAN2-31.40	TAM2-31.40	TAX2-31.40
2-C	—	1.2402	31.50	3/16	TAP2-31.50	TAK2-31.50	TAN2-31.50	TAM2-31.50	TAX2-31.50
2-C	—	1.2441	31.60	3/16	TAP2-31.60	TAK2-31.60	TAN2-31.60	TAM2-31.60	TAX2-31.60

Inserts sold in multiples of 2.

Sub Series Holders (A, B, C, D)

Sub series holders are recommended when running carbide inserts toward the upper end of the series drill range, as well as in tougher applications requiring more insert support and holder strength. **NOTE:** Only specified sub series inserts should be used with equivalent or smaller sub series holders.

A Series Insert + A Series Holder

C Series Insert + A Series Holder

C Series Insert + C Series Holder

A Series Insert + C Series Holder

A25: 36 - 39

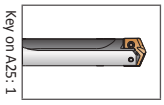

A25: 50 - 57

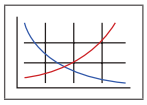

Sizes not shown are available upon request.
When ordering, please follow the example below:

Imperial:	0.5180", steel, 0 series = use Part No. **TAP0-13.16**
Metric:	13.16 mm, steel, 0 series = use Part No. **TAP0-13.16**

T-A Pro Drill Inserts

2 Series | Diameter Range: 0.9597" - 1.3797" (24.38 mm - 35.04 mm)

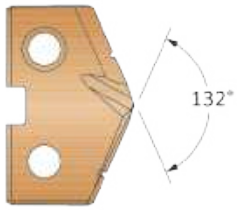

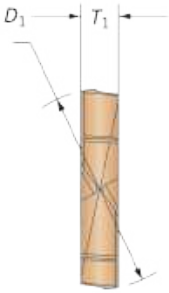

Insert					Carbide				HSS
					Part No.	Part No.	Part No.	Part No.	Part No.
Series	Fractional Equivalent	D_1 inch	D_1 mm	T_1	P	K	N	M	X
2-D	—	1.2480	31.70	3/16	TAP2-31.70	TAK2-31.70	TAN2-31.70	TAM2-31.70	TAX2-31.70
2-D	1-1/4	1.2500	31.75	3/16	TAP2-31.75	TAK2-31.75	TAN2-31.75	TAM2-31.75	TAX2-31.75
2-D	—	1.2520	31.80	3/16	TAP2-31.80	TAK2-31.80	TAN2-31.80	TAM2-31.80	TAX2-31.80
2-D	—	1.2559	31.90	3/16	TAP2-31.90	TAK2-31.90	TAN2-31.90	TAM2-31.90	TAX2-31.90
2-D	—	1.2598	32.00	3/16	TAP2-32.00	TAK2-32.00	TAN2-32.00	TAM2-32.00	TAX2-32.00
2-D	—	1.2638	32.10	3/16	TAP2-32.10	TAK2-32.10	TAN2-32.10	TAM2-32.10	TAX2-32.10
2-D	1-17/64	1.2657	32.15	3/16	TAP2-32.15	TAK2-32.15	TAN2-32.15	TAM2-32.15	TAX2-32.15
2-D	—	1.2677	32.20	3/16	TAP2-32.20	TAK2-32.20	TAN2-32.20	TAM2-32.20	TAX2-32.20
2-D	—	1.2717	32.30	3/16	TAP2-32.30	TAK2-32.30	TAN2-32.30	TAM2-32.30	TAX2-32.30
2-D	—	1.2756	32.40	3/16	TAP2-32.40	TAK2-32.40	TAN2-32.40	TAM2-32.40	TAX2-32.40
2-D	—	1.2795	32.50	3/16	TAP2-32.50	TAK2-32.50	TAN2-32.50	TAM2-32.50	TAX2-32.50
2-D	1-9/32	1.2815	32.55	3/16	TAP2-32.55	TAK2-32.55	TAN2-32.55	TAM2-32.55	TAX2-32.55
2-D	—	1.2835	32.60	3/16	TAP2-32.60	TAK2-32.60	TAN2-32.60	TAM2-32.60	TAX2-32.60
2-D	—	1.2874	32.70	3/16	TAP2-32.70	TAK2-32.70	TAN2-32.70	TAM2-32.70	TAX2-32.70
2-D	—	1.2913	32.80	3/16	TAP2-32.80	TAK2-32.80	TAN2-32.80	TAM2-32.80	TAX2-32.80
2-D	—	1.2953	32.90	3/16	TAP2-32.90	TAK2-32.90	TAN2-32.90	TAM2-32.90	TAX2-32.90
2-D	—	1.2992	33.00	3/16	TAP2-33.00	TAK2-33.00	TAN2-33.00	TAM2-33.00	TAX2-33.00
2-D	—	1.3031	33.10	3/16	TAP2-33.10	TAK2-33.10	TAN2-33.10	TAM2-33.10	TAX2-33.10
2-D	—	1.3071	33.20	3/16	TAP2-33.20	TAK2-33.20	TAN2-33.20	TAM2-33.20	TAX2-33.20
2-D	—	1.3110	33.30	3/16	TAP2-33.30	TAK2-33.30	TAN2-33.30	TAM2-33.30	TAX2-33.30
2-D	1-5/16	1.3126	33.34	3/16	TAP2-33.34	TAK2-33.34	TAN2-33.34	TAM2-33.34	TAX2-33.34
2-D	—	1.3150	33.40	3/16	TAP2-33.40	TAK2-33.40	TAN2-33.40	TAM2-33.40	TAX2-33.40
2-D	—	1.3189	33.50	3/16	TAP2-33.50	TAK2-33.50	TAN2-33.50	TAM2-33.50	TAX2-33.50
2-D	—	1.3228	33.60	3/16	TAP2-33.60	TAK2-33.60	TAN2-33.60	TAM2-33.60	TAX2-33.60
2-D	—	1.3268	33.70	3/16	TAP2-33.70	TAK2-33.70	TAN2-33.70	TAM2-33.70	TAX2-33.70
2-D	—	1.3307	33.80	3/16	TAP2-33.80	TAK2-33.80	TAN2-33.80	TAM2-33.80	TAX2-33.80
2-D	—	1.3346	33.90	3/16	TAP2-33.90	TAK2-33.90	TAN2-33.90	TAM2-33.90	TAX2-33.90
2-D	—	1.3386	34.00	3/16	TAP2-34.00	TAK2-34.00	TAN2-34.00	TAM2-34.00	TAX2-34.00
2-D	—	1.3425	34.10	3/16	TAP2-34.10	TAK2-34.10	TAN2-34.10	TAM2-34.10	TAX2-34.10
2-D	1-11/32	1.3437	34.13	3/16	TAP2-34.13	TAK2-34.13	TAN2-34.13	TAM2-34.13	TAX2-34.13
2-D	—	1.3465	34.20	3/16	TAP2-34.20	TAK2-34.20	TAN2-34.20	TAM2-34.20	TAX2-34.20
2-D	—	1.3504	34.30	3/16	TAP2-34.30	TAK2-34.30	TAN2-34.30	TAM2-34.30	TAX2-34.30
2-D	—	1.3543	34.40	3/16	TAP2-34.40	TAK2-34.40	TAN2-34.40	TAM2-34.40	TAX2-34.40
2-D	—	1.3583	34.50	3/16	TAP2-34.50	TAK2-34.50	TAN2-34.50	TAM2-34.50	TAX2-34.50
2-D	—	1.3622	34.60	3/16	TAP2-34.60	TAK2-34.60	TAN2-34.60	TAM2-34.60	TAX2-34.60
2-D	—	1.3661	34.70	3/16	TAP2-34.70	TAK2-34.70	TAN2-34.70	TAM2-34.70	TAX2-34.70
2-D	—	1.3701	34.80	3/16	TAP2-34.80	TAK2-34.80	TAN2-34.80	TAM2-34.80	TAX2-34.80
2-D	—	1.3740	34.90	3/16	TAP2-34.90	TAK2-34.90	TAN2-34.90	TAM2-34.90	TAX2-34.90
2-D	1-3/8	1.3752	34.93	3/16	TAP2-34.93	TAK2-34.93	TAN2-34.93	TAM2-34.93	TAX2-34.93
2-D	—	1.3780	35.00	3/16	TAP2-35.00	TAK2-35.00	TAN2-35.00	TAM2-35.00	TAX2-35.00

Inserts sold in multiples of 2.

Sub Series Holders (A, B, C, D)

Sub series holders are recommended when running carbide inserts toward the upper end of the series drill range, as well as in tougher applications requiring more insert support and holder strength. **NOTE:** Only specified sub series inserts should be used with equivalent or smaller sub series holders.

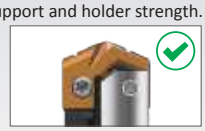

A Series Insert + A Series Holder

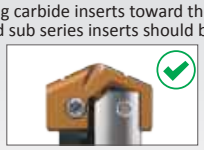

C Series Insert + A Series Holder

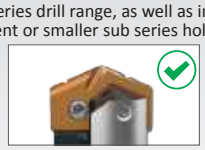

C Series Insert + C Series Holder

A Series Insert + C Series Holder

A25: 36 - 39

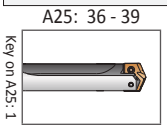

Key on A25: 1

A25: 50 - 57

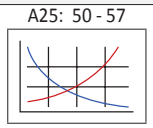

Sizes not shown are available upon request.
When ordering, please follow the example below:

Imperial:	0.5180", steel, 0 series = use Part No. **TAP0-13.16**
Metric:	13.16 mm, steel, 0 series = use Part No. **TAP0-13.16**

T-A Pro Drill Holders

2 Series Imperial | Diameter Range: 0.9597" - 1.3797"

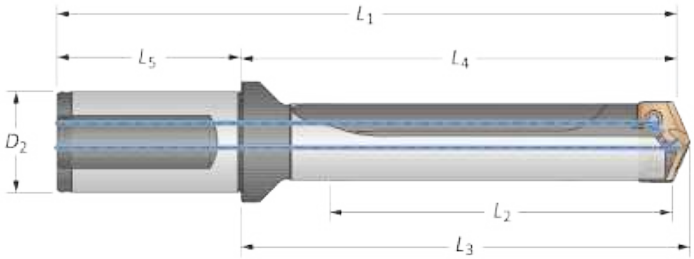

	Body						Shank			
	Length	Sub Series	L_2	L_4	L_3	L_1	L_5	D_2	Flat	Part No.
	Stub	A	1.171	2.954	3.094	5.234	2.280	1-1/4	Yes	**HTA2A01-125F**
	Stub	A	1.171	2.954	3.094	5.234	2.280	1-1/4	No	**HTA2A01-125C**
	Stub	B	1.171	2.954	3.094	5.234	2.280	1-1/4	Yes	**HTA2B01-125F**
	Stub	B	1.171	2.954	3.094	5.234	2.280	1-1/4	No	**HTA2B01-125C**
	Stub	C	1.171	2.954	3.094	5.234	2.280	1-1/4	Yes	**HTA2C01-125F**
	Stub	C	1.171	2.954	3.094	5.234	2.280	1-1/4	No	**HTA2C01-125C**
	Stub	D	1.171	2.954	3.094	5.234	2.280	1-1/4	Yes	**HTA2D01-125F**
	Stub	D	1.171	2.954	3.094	5.234	2.280	1-1/4	No	**HTA2D01-125C**
	3xD	A	3.513	5.411	5.551	7.691	2.280	1-1/4	Yes	**HTA2A03-125F**
	3xD	A	3.513	5.411	5.551	7.691	2.280	1-1/4	No	**HTA2A03-125C**
	3xD	B	3.513	5.411	5.551	7.691	2.280	1-1/4	Yes	**HTA2B03-125F**
	3xD	B	3.513	5.411	5.551	7.691	2.280	1-1/4	No	**HTA2B03-125C**
	3xD	C	3.513	5.411	5.551	7.691	2.280	1-1/4	Yes	**HTA2C03-125F**
	3xD	C	3.513	5.411	5.551	7.691	2.280	1-1/4	No	**HTA2C03-125C**
	3xD	D	3.513	5.411	5.551	7.691	2.280	1-1/4	Yes	**HTA2D03-125F**
i	3xD	D	3.513	5.411	5.551	7.691	2.280	1-1/4	No	**HTA2D03-125C**
	5xD	A	5.855	7.753	7.893	10.033	2.280	1-1/4	Yes	**HTA2A05-125F**
	5xD	A	5.855	7.753	7.893	10.033	2.280	1-1/4	No	**HTA2A05-125C**
	5xD	B	5.855	7.753	7.893	10.033	2.280	1-1/4	Yes	**HTA2B05-125F**
	5xD	B	5.855	7.753	7.893	10.033	2.280	1-1/4	No	**HTA2B05-125C**
	5xD	C	5.855	7.753	7.893	10.033	2.280	1-1/4	Yes	**HTA2C05-125F**
	5xD	C	5.855	7.753	7.893	10.033	2.280	1-1/4	No	**HTA2C05-125C**
	5xD	D	5.855	7.753	7.893	10.033	2.280	1-1/4	Yes	**HTA2D05-125F**
	5xD	D	5.855	7.753	7.893	10.033	2.280	1-1/4	No	**HTA2D05-125C**
	7xD	A	8.197	10.095	10.235	12.375	2.280	1-1/4	Yes	**HTA2A07-125F**
	7xD	A	8.197	10.095	10.235	12.375	2.280	1-1/4	No	**HTA2A07-125C**
	7xD	B	8.197	10.095	10.235	12.375	2.280	1-1/4	Yes	**HTA2B07-125F**
	7xD	B	8.197	10.095	10.235	12.375	2.280	1-1/4	No	**HTA2B07-125C**
	7xD	C	8.197	10.095	10.235	12.375	2.280	1-1/4	Yes	**HTA2C07-125F**
	7xD	C	8.197	10.095	10.235	12.375	2.280	1-1/4	No	**HTA2C07-125C**
	7xD	D	8.197	10.095	10.235	12.375	2.280	1-1/4	Yes	**HTA2D07-125F**
	7xD	D	8.197	10.095	10.235	12.375	2.280	1-1/4	No	**HTA2D07-125C**

Sub Series	2 Series Holder Diameter Range	
	Imperial (inch)	Metric (mm)
2A	0.9597" - 1.3797"	24.38 mm - 35.04 mm
2B	0.9999" - 1.3797"	25.40 mm - 35.04 mm
2C	1.1219" - 1.3797"	28.50 mm - 35.04 mm
2D	1.2479" - 1.3797"	31.70 mm - 35.04 mm

Connection Accessories

Insert Screws	Nylon Locking Screws	Insert Driver	Preset Torque Hand Driver	Replacement Tips	Admissible Tightening Torque*
7495-IP15-1	7495N-IP15-1	8IP-15	8IP-15TL	8IP-15B	61.0 in-lbs (690 N-cm)

*Tightening torques are calculated with a friction coefficient of μ = 0.14 and develop 90% of ultimate yield strength.

⚠ WARNING Refer to Speed and Feed charts for recommended adjustments to speeds and feeds. Refer to page **A25: 60** for deep hole drilling guidelines in this section of the catalog. Visit **www.alliedmachine.com/DeepHoleGuidelines** for the most up-to-date information and procedures. Factory technical assistance is available for your specific applications through our Application Engineering department.
ext: **7611** | *email:* **appeng@alliedmachine.com**

A25: 32 - 35

A25: 50 - 57

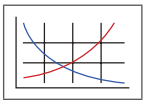

i = Imperial (in)
m = Metric (mm)
Screws sold in multiples of 10.

T-A Pro Drill Holders

2 Series Imperial | Diameter Range: 0.9597" - 1.3797"

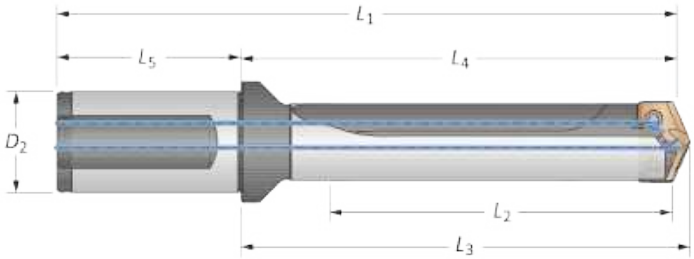

	Length	Sub Series	Body L_2	Body L_4	Body L_3	Body L_1	Shank L_5	Shank D_2	Shank Flat	Part No.
	10xD	A	11.710	13.608	13.748	15.888	2.280	1-1/4	Yes	HTA2A10-125F
	10xD	A	11.710	13.608	13.748	15.888	2.280	1-1/4	No	HTA2A10-125C
	10xD	B	11.710	13.608	13.748	15.888	2.280	1-1/4	Yes	HTA2B10-125F
	10xD	B	11.710	13.608	13.748	15.888	2.280	1-1/4	No	HTA2B10-125C
	10xD	C	11.710	13.608	13.748	15.888	2.280	1-1/4	Yes	HTA2C10-125F
	10xD	C	11.710	13.608	13.748	15.888	2.280	1-1/4	No	HTA2C10-125C
	10xD	D	11.710	13.608	13.748	15.888	2.280	1-1/4	Yes	HTA2D10-125F
	10xD	D	11.710	13.608	13.748	15.888	2.280	1-1/4	No	HTA2D10-125C
	12xD	A	14.052	15.950	16.090	18.230	2.280	1-1/4	Yes	HTA2A12-125F
	12xD	A	14.052	15.950	16.090	18.230	2.280	1-1/4	No	HTA2A12-125C
	12xD	B	14.052	15.950	16.090	18.230	2.280	1-1/4	Yes	HTA2B12-125F
	12xD	B	14.052	15.950	16.090	18.230	2.280	1-1/4	No	HTA2B12-125C
	12xD	C	14.052	15.950	16.090	18.230	2.280	1-1/4	Yes	HTA2C12-125F
	12xD	C	14.052	15.950	16.090	18.230	2.280	1-1/4	No	HTA2C12-125C
	12xD	D	14.052	15.950	16.090	18.230	2.280	1-1/4	Yes	HTA2D12-125F
	12xD	D	14.052	15.950	16.090	18.230	2.280	1-1/4	No	HTA2D12-125C
	15xD	A	17.565	19.463	19.603	21.743	2.280	1-1/4	Yes	HTA2A15-125F
	15xD	A	17.565	19.463	19.603	21.743	2.280	1-1/4	No	HTA2A15-125C
	15xD	B	17.565	19.463	19.603	21.743	2.280	1-1/4	Yes	HTA2B15-125F
	15xD	B	17.565	19.463	19.603	21.743	2.280	1-1/4	No	HTA2B15-125C
	15xD	C	17.565	19.463	19.603	21.743	2.280	1-1/4	Yes	HTA2C15-125F
	15xD	C	17.565	19.463	19.603	21.743	2.280	1-1/4	No	HTA2C15-125C
	15xD	D	17.565	19.463	19.603	21.743	2.280	1-1/4	Yes	HTA2D15-125F
	15xD	D	17.565	19.463	19.603	21.743	2.280	1-1/4	No	HTA2D15-125C

Sub Series	2 Series Holder Diameter Range Imperial (inch)	Metric (mm)
2A	0.9597" - 1.3797"	24.38 mm - 35.04 mm
2B	0.9999" - 1.3797"	25.40 mm - 35.04 mm
2C	1.1219" - 1.3797"	28.50 mm - 35.04 mm
2D	1.2479" - 1.3797"	31.70 mm - 35.04 mm

Connection Accessories

Insert Screws	Nylon Locking Screws	Insert Driver	Preset Torque Hand Driver	Replacement Tips	Admissible Tightening Torque*
7495-IP15-1	7495N-IP15-1	8IP-15	8IP-15TL	8IP-15B	61.0 in-lbs (690 N-cm)

*Tightening torques are calculated with a friction coefficient of μ = 0.14 and develop 90% of ultimate yield strength.

WARNING Refer to Speed and Feed charts for recommended adjustments to speeds and feeds. Refer to page **A25: 60** for deep hole drilling guidelines in this section of the catalog. Visit **www.alliedmachine.com/DeepHoleGuidelines** for the most up-to-date information and procedures. Factory technical assistance is available for your specific applications through our Application Engineering department.
ext: **7611** | *email:* **appeng@alliedmachine.com**

A25: 32 - 35

Key on A25: 1

A25: 50 - 57

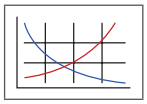

ⓘ = Imperial (in)
ⓜ = Metric (mm)
Screws sold in multiples of 10.

T-A Pro Drill Holders

2 Series Metric | Diameter Range: 24.38 mm - 35.04 mm

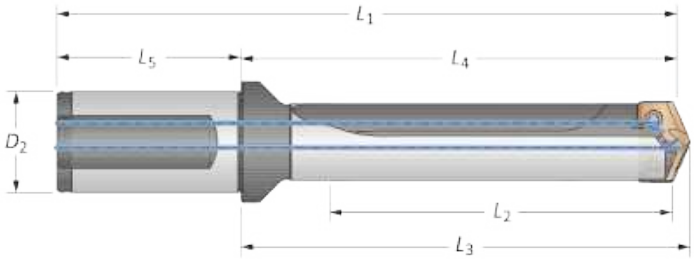

	Body						Shank			
	Length	Sub Series	L_2	L_4	L_3	L_1	L_5	D_2	Flat	Part No.
	Stub	A	29.7	75.0	78.6	135.0	60.0	32	Yes	**HTA2A01-32FM**
	Stub	A	29.7	75.0	78.6	135.0	60.0	32	No	**HTA2A01-32CM**
	Stub	B	29.7	75.0	78.6	135.0	60.0	32	Yes	**HTA2B01-32FM**
	Stub	B	29.7	75.0	78.6	135.0	60.0	32	No	**HTA2B01-32CM**
	Stub	C	29.7	75.0	78.6	135.0	60.0	32	Yes	**HTA2C01-32FM**
	Stub	C	29.7	75.0	78.6	135.0	60.0	32	No	**HTA2C01-32CM**
	Stub	D	29.7	75.0	78.6	135.0	60.0	32	Yes	**HTA2D01-32FM**
	Stub	D	29.7	75.0	78.6	135.0	60.0	32	No	**HTA2D01-32CM**
	3xD	A	89.2	137.4	141.0	197.4	60.0	32	Yes	**HTA2A03-32FM**
	3xD	A	89.2	137.4	141.0	197.4	60.0	32	No	**HTA2A03-32CM**
	3xD	B	89.2	137.4	141.0	197.4	60.0	32	Yes	**HTA2B03-32FM**
	3xD	B	89.2	137.4	141.0	197.4	60.0	32	No	**HTA2B03-32CM**
	3xD	C	89.2	137.4	141.0	197.4	60.0	32	Yes	**HTA2C03-32FM**
	3xD	C	89.2	137.4	141.0	197.4	60.0	32	No	**HTA2C03-32CM**
	3xD	D	89.2	137.4	141.0	197.4	60.0	32	Yes	**HTA2D03-32FM**
m	3xD	D	89.2	137.4	141.0	197.4	60.0	32	No	**HTA2D03-32CM**
	5xD	A	148.7	196.9	200.5	256.9	60.0	32	Yes	**HTA2A05-32FM**
	5xD	A	148.7	196.9	200.5	256.9	60.0	32	No	**HTA2A05-32CM**
	5xD	B	148.7	196.9	200.5	256.9	60.0	32	Yes	**HTA2B05-32FM**
	5xD	B	148.7	196.9	200.5	256.9	60.0	32	No	**HTA2B05-32CM**
	5xD	C	148.7	196.9	200.5	256.9	60.0	32	Yes	**HTA2C05-32FM**
	5xD	C	148.7	196.9	200.5	256.9	60.0	32	No	**HTA2C05-32CM**
	5xD	D	148.7	196.9	200.5	256.9	60.0	32	Yes	**HTA2D05-32FM**
	5xD	D	148.7	196.9	200.5	256.9	60.0	32	No	**HTA2D05-32CM**
	7xD	A	208.2	256.4	260.0	316.4	60.0	32	Yes	**HTA2A07-32FM**
	7xD	A	208.2	256.4	260.0	316.4	60.0	32	No	**HTA2A07-32CM**
	7xD	B	208.2	256.4	260.0	316.4	60.0	32	Yes	**HTA2B07-32FM**
	7xD	B	208.2	256.4	260.0	316.4	60.0	32	No	**HTA2B07-32CM**
	7xD	C	208.2	256.4	260.0	316.4	60.0	32	Yes	**HTA2C07-32FM**
	7xD	C	208.2	256.4	260.0	316.4	60.0	32	No	**HTA2C07-32CM**
	7xD	D	208.2	256.4	260.0	316.4	60.0	32	Yes	**HTA2D07-32FM**
	7xD	D	208.2	256.4	260.0	316.4	60.0	32	No	**HTA2D07-32CM**

Sub Series	2 Series Holder Diameter Range	
	Imperial (inch)	Metric (mm)
2A	0.9597" - 1.3797"	24.38 mm - 35.04 mm
2B	0.9999" - 1.3797"	25.40 mm - 35.04 mm
2C	1.1219" - 1.3797"	28.50 mm - 35.04 mm
2D	1.2479" - 1.3797"	31.70 mm - 35.04 mm

Connection Accessories

Insert Screws	Nylon Locking Screws	Insert Driver	Preset Torque Hand Driver	Replacement Tips	Admissible Tightening Torque*
7495-IP15-1	7495N-IP15-1	8IP-15	8IP-15TL	8IP-15B	61.0 in-lbs (690 N-cm)

*Tightening torques are calculated with a friction coefficient of μ = 0.14 and develop 90% of ultimate yield strength.

⚠ WARNING Refer to Speed and Feed charts for recommended adjustments to speeds and feeds. Refer to page **A25: 60** for deep hole drilling guidelines in this section of the catalog. Visit **www.alliedmachine.com/DeepHoleGuidelines** for the most up-to-date information and procedures. Factory technical assistance is available for your specific applications through our Application Engineering department.
ext: **7611** | *email:* **appeng@alliedmachine.com**

A25: 32 - 35

A25: 50 - 57

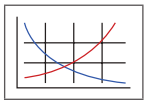

ⓘ = Imperial (in)
ⓜ = Metric (mm)
Screws sold in multiples of 10.

T-A Pro Drill Holders

2 Series Metric | Diameter Range: 24.38 mm - 35.04 mm

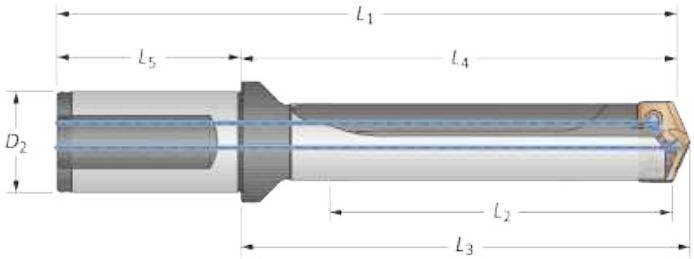

	Body						Shank			
	Length	Sub Series	L_2	L_4	L_3	L_1	L_5	D_2	Flat	Part No.
m	10xD	A	297.4	345.6	349.2	405.6	60.0	32	Yes	HTA2A10-32FM
	10xD	A	297.4	345.6	349.2	405.6	60.0	32	No	HTA2A10-32CM
	10xD	B	297.4	345.6	349.2	405.6	60.0	32	Yes	HTA2B10-32FM
	10xD	B	297.4	345.6	349.2	405.6	60.0	32	No	HTA2B10-32CM
	10xD	C	297.4	345.6	349.2	405.6	60.0	32	Yes	HTA2C10-32FM
	10xD	C	297.4	345.6	349.2	405.6	60.0	32	No	HTA2C10-32CM
	10xD	D	297.4	345.6	349.2	405.6	60.0	32	Yes	HTA2D10-32FM
	10xD	D	297.4	345.6	349.2	405.6	60.0	32	No	HTA2D10-32CM
	12xD	A	356.9	405.1	408.7	465.1	60.0	32	Yes	HTA2A12-32FM
	12xD	A	356.9	405.1	408.7	465.1	60.0	32	No	HTA2A12-32CM
	12xD	B	356.9	405.1	408.7	465.1	60.0	32	Yes	HTA2B12-32FM
	12xD	B	356.9	405.1	408.7	465.1	60.0	32	No	HTA2B12-32CM
	12xD	C	356.9	405.1	408.7	465.1	60.0	32	Yes	HTA2C12-32FM
	12xD	C	356.9	405.1	408.7	465.1	60.0	32	No	HTA2C12-32CM
	12xD	D	356.9	405.1	408.7	465.1	60.0	32	Yes	HTA2D12-32FM
	12xD	D	356.9	405.1	408.7	465.1	60.0	32	No	HTA2D12-32CM
	15xD	A	446.2	494.4	497.9	554.4	60.0	32	Yes	HTA2A15-32FM
	15xD	A	446.2	494.4	497.9	554.4	60.0	32	No	HTA2A15-32CM
	15xD	B	446.2	494.4	497.9	554.4	60.0	32	Yes	HTA2B15-32FM
	15xD	B	446.2	494.4	497.9	554.4	60.0	32	No	HTA2B15-32CM
	15xD	C	446.2	494.4	497.9	554.4	60.0	32	Yes	HTA2C15-32FM
	15xD	C	446.2	494.4	497.9	554.4	60.0	32	No	HTA2C15-32CM
	15xD	D	446.2	494.4	497.9	554.4	60.0	32	Yes	HTA2D15-32FM
	15xD	D	446.2	494.4	497.9	554.4	60.0	32	No	HTA2D15-32CM

Sub Series	2 Series Holder Diameter Range	
	Imperial (inch)	Metric (mm)
2A	0.9597" - 1.3797"	24.38 mm - 35.04 mm
2B	0.9999" - 1.3797"	25.40 mm - 35.04 mm
2C	1.1219" - 1.3797"	28.50 mm - 35.04 mm
2D	1.2479" - 1.3797"	31.70 mm - 35.04 mm

Connection Accessories

Insert Screws	Nylon Locking Screws	Insert Driver	Preset Torque Hand Driver	Replacement Tips	Admissible Tightening Torque*
7495-IP15-1	7495N-IP15-1	8IP-15	8IP-15TL	8IP-15B	61.0 in-lbs (690 N-cm)

*Tightening torques are calculated with a friction coefficient of μ = 0.14 and develop 90% of ultimate yield strength.

WARNING Refer to Speed and Feed charts for recommended adjustments to speeds and feeds. Refer to page **A25: 60** for deep hole drilling guidelines in this section of the catalog. Visit **www.alliedmachine.com/DeepHoleGuidelines** for the most up-to-date information and procedures. Factory technical assistance is available for your specific applications through our Application Engineering department.
ext: **7611** | *email:* **appeng@alliedmachine.com**

A25: 32 - 35

A25: 50 - 57

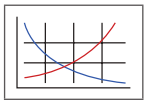

Key on A25: 1

ⓘ = Imperial (in)
ⓜ = Metric (mm)
Screws sold in multiples of 10.

T-A Pro Drill Inserts

3 Series | Diameter Range: 1.3798" - 1.8820" (35.05 mm - 47.80 mm)

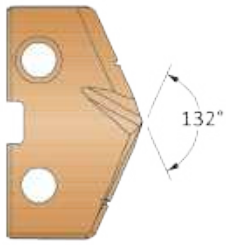

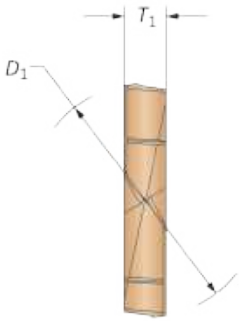

Insert					Carbide				HSS
					Part No.	Part No.	Part No.	Part No.	Part No.
Series	Fractional Equivalent	D_1 inch	D_1 mm	T_1	P	K	N	M	X
3-A	—	1.3819	35.10	1/4	TAP3-35.10	TAK3-35.10	TAN3-35.10	TAM3-35.10	TAX3-35.10
3-A	—	1.3858	35.20	1/4	TAP3-35.20	TAK3-35.20	TAN3-35.20	TAM3-35.20	TAX3-35.20
3-A	—	1.3898	35.30	1/4	TAP3-35.30	TAK3-35.30	TAN3-35.30	TAM3-35.30	TAX3-35.30
3-A	—	1.3937	35.40	1/4	TAP3-35.40	TAK3-35.40	TAN3-35.40	TAM3-35.40	TAX3-35.40
3-A	—	1.3976	35.50	1/4	TAP3-35.50	TAK3-35.50	TAN3-35.50	TAM3-35.50	TAX3-35.50
3-A	—	1.4016	35.60	1/4	TAP3-35.60	TAK3-35.60	TAN3-35.60	TAM3-35.60	TAX3-35.60
3-A	—	1.4055	35.70	1/4	TAP3-35.70	TAK3-35.70	TAN3-35.70	TAM3-35.70	TAX3-35.70
3-A	1-13/32	1.4063	35.72	1/4	TAP3-35.72	TAK3-35.72	TAN3-35.72	TAM3-35.72	TAX3-35.72
3-A	—	1.4094	35.80	1/4	TAP3-35.80	TAK3-35.80	TAN3-35.80	TAM3-35.80	TAX3-35.80
3-A	—	1.4134	35.90	1/4	TAP3-35.90	TAK3-35.90	TAN3-35.90	TAM3-35.90	TAX3-35.90
3-A	—	1.4173	36.00	1/4	TAP3-36.00	TAK3-36.00	TAN3-36.00	TAM3-36.00	TAX3-36.00
3-A	—	1.4213	36.10	1/4	TAP3-36.10	TAK3-36.10	TAN3-36.10	TAM3-36.10	TAX3-36.10
3-A	—	1.4252	36.20	1/4	TAP3-36.20	TAK3-36.20	TAN3-36.20	TAM3-36.20	TAX3-36.20
3-A	—	1.4291	36.30	1/4	TAP3-36.30	TAK3-36.30	TAN3-36.30	TAM3-36.30	TAX3-36.30
3-A	—	1.4331	36.40	1/4	TAP3-36.40	TAK3-36.40	TAN3-36.40	TAM3-36.40	TAX3-36.40
3-A	—	1.4370	36.50	1/4	TAP3-36.50	TAK3-36.50	TAN3-36.50	TAM3-36.50	TAX3-36.50
3-A	1-7/16	1.4374	36.51	1/4	TAP3-36.51	TAK3-36.51	TAN3-36.51	TAM3-36.51	TAX3-36.51
3-A	—	1.4409	36.60	1/4	TAP3-36.60	TAK3-36.60	TAN3-36.60	TAM3-36.60	TAX3-36.60
3-A	—	1.4449	36.70	1/4	TAP3-36.70	TAK3-36.70	TAN3-36.70	TAM3-36.70	TAX3-36.70
3-A	—	1.4488	36.80	1/4	TAP3-36.80	TAK3-36.80	TAN3-36.80	TAM3-36.80	TAX3-36.80
3-A	—	1.4528	36.90	1/4	TAP3-36.90	TAK3-36.90	TAN3-36.90	TAM3-36.90	TAX3-36.90
3-A	—	1.4567	37.00	1/4	TAP3-37.00	TAK3-37.00	TAN3-37.00	TAM3-37.00	TAX3-37.00
3-A	—	1.4606	37.10	1/4	TAP3-37.10	TAK3-37.10	TAN3-37.10	TAM3-37.10	TAX3-37.10
3-A	—	1.4646	37.20	1/4	TAP3-37.20	TAK3-37.20	TAN3-37.20	TAM3-37.20	TAX3-37.20
3-A	—	1.4685	37.30	1/4	TAP3-37.30	TAK3-37.30	TAN3-37.30	TAM3-37.30	TAX3-37.30
3-A	1-15/32	1.4689	37.31	1/4	TAP3-37.31	TAK3-37.31	TAN3-37.31	TAM3-37.31	TAX3-37.31
3-A	—	1.4724	37.40	1/4	TAP3-37.40	TAK3-37.40	TAN3-37.40	TAM3-37.40	TAX3-37.40
3-A	—	1.4764	37.50	1/4	TAP3-37.50	TAK3-37.50	TAN3-37.50	TAM3-37.50	TAX3-37.50
3-A	—	1.4803	37.60	1/4	TAP3-37.60	TAK3-37.60	TAN3-37.60	TAM3-37.60	TAX3-37.60
3-A	1-31/64	1.4843	37.70	1/4	TAP3-37.70	TAK3-37.70	TAN3-37.70	TAM3-37.70	TAX3-37.70

Inserts sold in multiples of 1.

Sub Series Holders (A, B, C, D)

Sub series holders are recommended when running carbide inserts toward the upper end of the series drill range, as well as in tougher applications requiring more insert support and holder strength. **NOTE:** Only specified sub series inserts should be used with equivalent or smaller sub series holders.

A Series Insert + A Series Holder

C Series Insert + A Series Holder

C Series Insert + C Series Holder

A Series Insert + C Series Holder

A25: 44 - 47

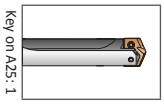

A25: 50 - 57

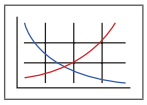

Sizes not shown are available upon request. When ordering, please follow the example below:	
Imperial:	0.5180", steel, 0 series = use Part No. **TAP0-13.16**
Metric:	13.16 mm, steel, 0 series = use Part No. **TAP0-13.16**

T-A Pro Drill Inserts

3 Series | Diameter Range: 1.3798" - 1.8820" (35.05 mm - 47.80 mm)

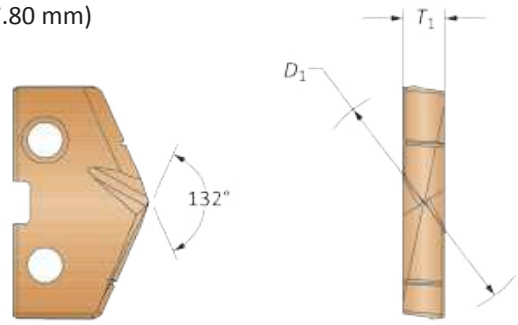

Insert					Carbide				HSS
					Part No.	Part No.	Part No.	Part No.	Part No.
Series	Fractional Equivalent	D_1 inch	D_1 mm	T_1	P	K	N	M	X
3-B	—	1.4882	37.80	1/4	TAP3-37.80	TAK3-37.80	TAN3-37.80	TAM3-37.80	TAX3-37.80
3-B	—	1.4921	37.90	1/4	TAP3-37.90	TAK3-37.90	TAN3-37.90	TAM3-37.90	TAX3-37.90
3-B	—	1.4961	38.00	1/4	TAP3-38.00	TAK3-38.00	TAN3-38.00	TAM3-38.00	TAX3-38.00
3-B	1-1/2	1.5000	38.10	1/4	TAP3-38.10	TAK3-38.10	TAN3-38.10	TAM3-38.10	TAX3-38.10
3-B	—	1.5039	38.20	1/4	TAP3-38.20	TAK3-38.20	TAN3-38.20	TAM3-38.20	TAX3-38.20
3-B	—	1.5079	38.30	1/4	TAP3-38.30	TAK3-38.30	TAN3-38.30	TAM3-38.30	TAX3-38.30
3-B	—	1.5118	38.40	1/4	TAP3-38.40	TAK3-38.40	TAN3-38.40	TAM3-38.40	TAX3-38.40
3-B	1-33/64	1.5157	38.50	1/4	TAP3-38.50	TAK3-38.50	TAN3-38.50	TAM3-38.50	TAX3-38.50
3-B	—	1.5197	38.60	1/4	TAP3-38.60	TAK3-38.60	TAN3-38.60	TAM3-38.60	TAX3-38.60
3-B	—	1.5236	38.70	1/4	TAP3-38.70	TAK3-38.70	TAN3-38.70	TAM3-38.70	TAX3-38.70
3-B	—	1.5276	38.80	1/4	TAP3-38.80	TAK3-38.80	TAN3-38.80	TAM3-38.80	TAX3-38.80
3-B	1-17/32	1.5311	38.89	1/4	TAP3-38.89	TAK3-38.89	TAN3-38.89	TAM3-38.89	TAX3-38.89
3-B	—	1.5315	38.90	1/4	TAP3-38.90	TAK3-38.90	TAN3-38.90	TAM3-38.90	TAX3-38.90
3-B	—	1.5354	39.00	1/4	TAP3-39.00	TAK3-39.00	TAN3-39.00	TAM3-39.00	TAX3-39.00
3-B	—	1.5394	39.10	1/4	TAP3-39.10	TAK3-39.10	TAN3-39.10	TAM3-39.10	TAX3-39.10
3-B	—	1.5433	39.20	1/4	TAP3-39.20	TAK3-39.20	TAN3-39.20	TAM3-39.20	TAX3-39.20
3-B	1-35/64	1.5469	39.29	1/4	TAP3-39.29	TAK3-39.29	TAN3-39.29	TAM3-39.29	TAX3-39.29
3-B	—	1.5472	39.30	1/4	TAP3-39.30	TAK3-39.30	TAN3-39.30	TAM3-39.30	TAX3-39.30
3-B	—	1.5512	39.40	1/4	TAP3-39.40	TAK3-39.40	TAN3-39.40	TAM3-39.40	TAX3-39.40
3-B	—	1.5551	39.50	1/4	TAP3-39.50	TAK3-39.50	TAN3-39.50	TAM3-39.50	TAX3-39.50
3-B	—	1.5591	39.60	1/4	TAP3-39.60	TAK3-39.60	TAN3-39.60	TAM3-39.60	TAX3-39.60
3-B	1-9/16	1.5626	39.69	1/4	TAP3-39.69	TAK3-39.69	TAN3-39.69	TAM3-39.69	TAX3-39.69
3-B	—	1.5630	39.70	1/4	TAP3-39.70	TAK3-39.70	TAN3-39.70	TAM3-39.70	TAX3-39.70
3-B	—	1.5669	39.80	1/4	TAP3-39.80	TAK3-39.80	TAN3-39.80	TAM3-39.80	TAX3-39.80
3-B	—	1.5709	39.90	1/4	TAP3-39.90	TAK3-39.90	TAN3-39.90	TAM3-39.90	TAX3-39.90
3-B	—	1.5748	40.00	1/4	TAP3-40.00	TAK3-40.00	TAN3-40.00	TAM3-40.00	TAX3-40.00
3-B	—	1.5787	40.10	1/4	TAP3-40.10	TAK3-40.10	TAN3-40.10	TAM3-40.10	TAX3-40.10
3-B	—	1.5827	40.20	1/4	TAP3-40.20	TAK3-40.20	TAN3-40.20	TAM3-40.20	TAX3-40.20
3-B	—	1.5866	40.30	1/4	TAP3-40.30	TAK3-40.30	TAN3-40.30	TAM3-40.30	TAX3-40.30
3-B	—	1.5906	40.40	1/4	TAP3-40.40	TAK3-40.40	TAN3-40.40	TAM3-40.40	TAX3-40.40
3-B	1-19/32	1.5937	40.48	1/4	TAP3-40.48	TAK3-40.48	TAN3-40.48	TAM3-40.48	TAX3-40.48
3-B	—	1.5945	40.50	1/4	TAP3-40.50	TAK3-40.50	TAN3-40.50	TAM3-40.50	TAX3-40.50
3-B	—	1.5984	40.60	1/4	TAP3-40.60	TAK3-40.60	TAN3-40.60	TAM3-40.60	TAX3-40.60
3-B	—	1.6024	40.70	1/4	TAP3-40.70	TAK3-40.70	TAN3-40.70	TAM3-40.70	TAX3-40.70
3-B	—	1.6063	40.80	1/4	TAP3-40.80	TAK3-40.80	TAN3-40.80	TAM3-40.80	TAX3-40.80
3-B	—	1.6102	40.90	1/4	TAP3-40.90	TAK3-40.90	TAN3-40.90	TAM3-40.90	TAX3-40.90

Inserts sold in multiples of 1.

Sub Series Holders (A, B, C, D)

Sub series holders are recommended when running carbide inserts toward the upper end of the series drill range, as well as in tougher applications requiring more insert support and holder strength. **NOTE:** Only specified sub series inserts should be used with equivalent or smaller sub series holders.

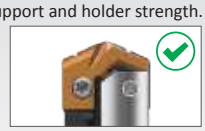

A Series Insert + A Series Holder

C Series Insert + A Series Holder

C Series Insert + C Series Holder

A Series Insert + C Series Holder

A25: 44 - 47

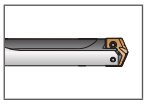

Key on A25: 1

A25: 50 - 57

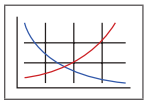

Sizes not shown are available upon request. When ordering, please follow the example below:	
Imperial:	0.5180", steel, 0 series = use Part No. **TAP0-13.16**
Metric:	13.16 mm, steel, 0 series = use Part No. **TAP0-13.16**

T-A Pro Drill Inserts

3 Series | Diameter Range: 1.3798" - 1.8820" (35.05 mm - 47.80 mm)

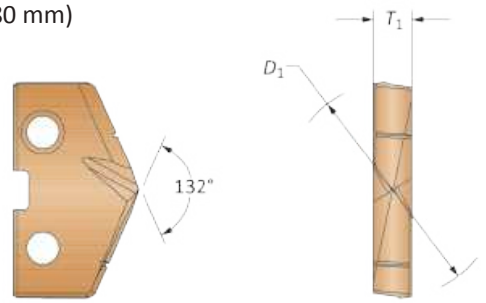

Insert					Carbide				HSS
					Part No.	Part No.	Part No.	Part No.	Part No.
Series	Fractional Equivalent	D_1 inch	D_1 mm	T_1	P	K	N	M	X
3-C	—	1.6142	41.00	1/4	TAP3-41.00	TAK3-41.00	TAN3-41.00	TAM3-41.00	TAX3-41.00
3-C	—	1.6181	41.10	1/4	TAP3-41.10	TAK3-41.10	TAN3-41.10	TAM3-41.10	TAX3-41.10
3-C	—	1.6220	41.20	1/4	TAP3-41.20	TAK3-41.20	TAN3-41.20	TAM3-41.20	TAX3-41.20
3-C	1-5/8	1.6252	41.28	1/4	TAP3-41.28	TAK3-41.28	TAN3-41.28	TAM3-41.28	TAX3-41.28
3-C	—	1.6260	41.30	1/4	TAP3-41.30	TAK3-41.30	TAN3-41.30	TAM3-41.30	TAX3-41.30
3-C	—	1.6299	41.40	1/4	TAP3-41.40	TAK3-41.40	TAN3-41.40	TAM3-41.40	TAX3-41.40
3-C	—	1.6339	41.50	1/4	TAP3-41.50	TAK3-41.50	TAN3-41.50	TAM3-41.50	TAX3-41.50
3-C	—	1.6378	41.60	1/4	TAP3-41.60	TAK3-41.60	TAN3-41.60	TAM3-41.60	TAX3-41.60
3-C	—	1.6417	41.70	1/4	TAP3-41.70	TAK3-41.70	TAN3-41.70	TAM3-41.70	TAX3-41.70
3-C	—	1.6457	41.80	1/4	TAP3-41.80	TAK3-41.80	TAN3-41.80	TAM3-41.80	TAX3-41.80
3-C	—	1.6496	41.90	1/4	TAP3-41.90	TAK3-41.90	TAN3-41.90	TAM3-41.90	TAX3-41.90
3-C	—	1.6535	42.00	1/4	TAP3-42.00	TAK3-42.00	TAN3-42.00	TAM3-42.00	TAX3-42.00
3-C	1-21/32	1.6563	42.07	1/4	TAP3-42.07	TAK3-42.07	TAN3-42.07	TAM3-42.07	TAX3-42.07
3-C	—	1.6575	42.10	1/4	TAP3-42.10	TAK3-42.10	TAN3-42.10	TAM3-42.10	TAX3-42.10
3-C	—	1.6614	42.20	1/4	TAP3-42.20	TAK3-42.20	TAN3-42.20	TAM3-42.20	TAX3-42.20
3-C	—	1.6654	42.30	1/4	TAP3-42.30	TAK3-42.30	TAN3-42.30	TAM3-42.30	TAX3-42.30
3-C	—	1.6693	42.40	1/4	TAP3-42.40	TAK3-42.40	TAN3-42.40	TAM3-42.40	TAX3-42.40
3-C	—	1.6732	42.50	1/4	TAP3-42.50	TAK3-42.50	TAN3-42.50	TAM3-42.50	TAX3-42.50
3-C	—	1.6772	42.60	1/4	TAP3-42.60	TAK3-42.60	TAN3-42.60	TAM3-42.60	TAX3-42.60
3-C	—	1.6811	42.70	1/4	TAP3-42.70	TAK3-42.70	TAN3-42.70	TAM3-42.70	TAX3-42.70
3-C	—	1.6850	42.80	1/4	TAP3-42.80	TAK3-42.80	TAN3-42.80	TAM3-42.80	TAX3-42.80
3-C	1-11/16	1.6874	42.86	1/4	TAP3-42.86	TAK3-42.86	TAN3-42.86	TAM3-42.86	TAX3-42.86
3-C	—	1.6890	42.90	1/4	TAP3-42.90	TAK3-42.90	TAN3-42.90	TAM3-42.90	TAX3-42.90
3-C	—	1.6929	43.00	1/4	TAP3-43.00	TAK3-43.00	TAN3-43.00	TAM3-43.00	TAX3-43.00
3-C	—	1.6969	43.10	1/4	TAP3-43.10	TAK3-43.10	TAN3-43.10	TAM3-43.10	TAX3-43.10
3-C	—	1.7008	43.20	1/4	TAP3-43.20	TAK3-43.20	TAN3-43.20	TAM3-43.20	TAX3-43.20
3-C	—	1.7047	43.30	1/4	TAP3-43.30	TAK3-43.30	TAN3-43.30	TAM3-43.30	TAX3-43.30
3-C	—	1.7087	43.40	1/4	TAP3-43.40	TAK3-43.40	TAN3-43.40	TAM3-43.40	TAX3-43.40
3-C	—	1.7126	43.50	1/4	TAP3-43.50	TAK3-43.50	TAN3-43.50	TAM3-43.50	TAX3-43.50
3-C	—	1.7165	43.60	1/4	TAP3-43.60	TAK3-43.60	TAN3-43.60	TAM3-43.60	TAX3-43.60
3-C	1-23/32	1.7189	43.66	1/4	TAP3-43.66	TAK3-43.66	TAN3-43.66	TAM3-43.66	TAX3-43.66
3-C	—	1.7205	43.70	1/4	TAP3-43.70	TAK3-43.70	TAN3-43.70	TAM3-43.70	TAX3-43.70
3-C	—	1.7244	43.80	1/4	TAP3-43.80	TAK3-43.80	TAN3-43.80	TAM3-43.80	TAX3-43.80
3-C	—	1.7283	43.90	1/4	TAP3-43.90	TAK3-43.90	TAN3-43.90	TAM3-43.90	TAX3-43.90
3-C	—	1.7323	44.00	1/4	TAP3-44.00	TAK3-44.00	TAN3-44.00	TAM3-44.00	TAX3-44.00
3-C	—	1.7362	44.10	1/4	TAP3-44.10	TAK3-44.10	TAN3-44.10	TAM3-44.10	TAX3-44.10
3-C	—	1.7402	44.20	1/4	TAP3-44.20	TAK3-44.20	TAN3-44.20	TAM3-44.20	TAX3-44.20
3-C	—	1.7441	44.30	1/4	TAP3-44.30	TAK3-44.30	TAN3-44.30	TAM3-44.30	TAX3-44.30

Inserts sold in multiples of 1.

Sub Series Holders (A, B, C, D)

Sub series holders are recommended when running carbide inserts toward the upper end of the series drill range, as well as in tougher applications requiring more insert support and holder strength. **NOTE:** Only specified sub series inserts should be used with equivalent or smaller sub series holders.

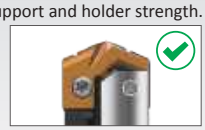

A Series Insert + A Series Holder

C Series Insert + A Series Holder

C Series Insert + C Series Holder

A Series Insert + C Series Holder

A25: 44 - 47

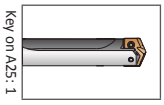

A25: 50 - 57

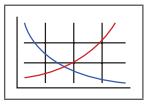

Sizes not shown are available upon request. When ordering, please follow the example below:	
Imperial:	0.5180", steel, 0 series = use Part No. **TAP0-13.16**
Metric:	13.16 mm, steel, 0 series = use Part No. **TAP0-13.16**

T-A Pro Drill Inserts

3 Series | Diameter Range: 1.3798" - 1.8820" (35.05 mm - 47.80 mm)

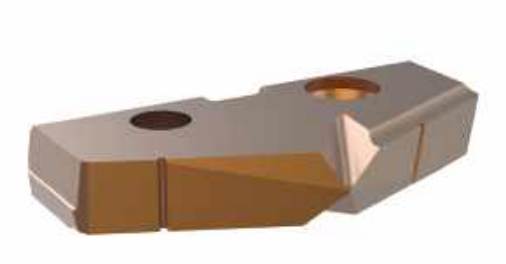

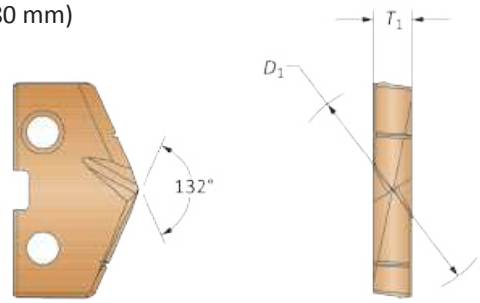

Insert					Carbide				HSS
					Part No.	Part No.	Part No.	Part No.	Part No.
Series	Fractional Equivalent	D_1 inch	D_1 mm	T_1	P	K	N	M	X
3-D	—	1.7480	44.40	1/4	TAP3-44.40	TAK3-44.40	TAN3-44.40	TAM3-44.40	TAX3-44.40
3-D	1-3/4	1.7500	44.45	1/4	TAP3-44.45	TAK3-44.45	TAN3-44.45	TAM3-44.45	TAX3-44.45
3-D	—	1.7520	44.50	1/4	TAP3-44.50	TAK3-44.50	TAN3-44.50	TAM3-44.50	TAX3-44.50
3-D	—	1.7559	44.60	1/4	TAP3-44.60	TAK3-44.60	TAN3-44.60	TAM3-44.60	TAX3-44.60
3-D	—	1.7598	44.70	1/4	TAP3-44.70	TAK3-44.70	TAN3-44.70	TAM3-44.70	TAX3-44.70
3-D	—	1.7638	44.80	1/4	TAP3-44.80	TAK3-44.80	TAN3-44.80	TAM3-44.80	TAX3-44.80
3-D	—	1.7677	44.90	1/4	TAP3-44.90	TAK3-44.90	TAN3-44.90	TAM3-44.90	TAX3-44.90
3-D	—	1.7717	45.00	1/4	TAP3-45.00	TAK3-45.00	TAN3-45.00	TAM3-45.00	TAX3-45.00
3-D	—	1.7756	45.10	1/4	TAP3-45.10	TAK3-45.10	TAN3-45.10	TAM3-45.10	TAX3-45.10
3-D	—	1.7795	45.20	1/4	TAP3-45.20	TAK3-45.20	TAN3-45.20	TAM3-45.20	TAX3-45.20
3-D	1-25/32	1.7811	45.24	1/4	TAP3-45.24	TAK3-45.24	TAN3-45.24	TAM3-45.24	TAX3-45.24
3-D	—	1.7835	45.30	1/4	TAP3-45.30	TAK3-45.30	TAN3-45.30	TAM3-45.30	TAX3-45.30
3-D	—	1.7874	45.40	1/4	TAP3-45.40	TAK3-45.40	TAN3-45.40	TAM3-45.40	TAX3-45.40
3-D	—	1.7913	45.50	1/4	TAP3-45.50	TAK3-45.50	TAN3-45.50	TAM3-45.50	TAX3-45.50
3-D	—	1.7953	45.60	1/4	TAP3-45.60	TAK3-45.60	TAN3-45.60	TAM3-45.60	TAX3-45.60
3-D	1-51/64	1.7969	45.64	1/4	TAP3-45.64	TAK3-45.64	TAN3-45.64	TAM3-45.64	TAX3-45.64
3-D	—	1.7992	45.70	1/4	TAP3-45.70	TAK3-45.70	TAN3-45.70	TAM3-45.70	TAX3-45.70
3-D	—	1.8031	45.80	1/4	TAP3-45.80	TAK3-45.80	TAN3-45.80	TAM3-45.80	TAX3-45.80
3-D	—	1.8071	45.90	1/4	TAP3-45.90	TAK3-45.90	TAN3-45.90	TAM3-45.90	TAX3-45.90
3-D	—	1.8110	46.00	1/4	TAP3-46.00	TAK3-46.00	TAN3-46.00	TAM3-46.00	TAX3-46.00
3-D	1-13/16	1.8126	46.04	1/4	TAP3-46.04	TAK3-46.04	TAN3-46.04	TAM3-46.04	TAX3-46.04
3-D	—	1.8150	46.10	1/4	TAP3-46.10	TAK3-46.10	TAN3-46.10	TAM3-46.10	TAX3-46.10
3-D	—	1.8189	46.20	1/4	TAP3-46.20	TAK3-46.20	TAN3-46.20	TAM3-46.20	TAX3-46.20
3-D	—	1.8228	46.30	1/4	TAP3-46.30	TAK3-46.30	TAN3-46.30	TAM3-46.30	TAX3-46.30
3-D	—	1.8268	46.40	1/4	TAP3-46.40	TAK3-46.40	TAN3-46.40	TAM3-46.40	TAX3-46.40
3-D	—	1.8307	46.50	1/4	TAP3-46.50	TAK3-46.50	TAN3-46.50	TAM3-46.50	TAX3-46.50
3-D	—	1.8346	46.60	1/4	TAP3-46.60	TAK3-46.60	TAN3-46.60	TAM3-46.60	TAX3-46.60
3-D	—	1.8386	46.70	1/4	TAP3-46.70	TAK3-46.70	TAN3-46.70	TAM3-46.70	TAX3-46.70
3-D	—	1.8425	46.80	1/4	TAP3-46.80	TAK3-46.80	TAN3-46.80	TAM3-46.80	TAX3-46.80
3-D	1-27/32	1.8437	46.83	1/4	TAP3-46.83	TAK3-46.83	TAN3-46.83	TAM3-46.83	TAX3-46.83
3-D	—	1.8465	46.90	1/4	TAP3-46.90	TAK3-46.90	TAN3-46.90	TAM3-46.90	TAX3-46.90
3-D	—	1.8504	47.00	1/4	TAP3-47.00	TAK3-47.00	TAN3-47.00	TAM3-47.00	TAX3-47.00
3-D	—	1.8543	47.10	1/4	TAP3-47.10	TAK3-47.10	TAN3-47.10	TAM3-47.10	TAX3-47.10
3-D	—	1.8583	47.20	1/4	TAP3-47.20	TAK3-47.20	TAN3-47.20	TAM3-47.20	TAX3-47.20
3-D	—	1.8622	47.30	1/4	TAP3-47.30	TAK3-47.30	TAN3-47.30	TAM3-47.30	TAX3-47.30
3-D	—	1.8661	47.40	1/4	TAP3-47.40	TAK3-47.40	TAN3-47.40	TAM3-47.40	TAX3-47.40
3-D	—	1.8701	47.50	1/4	TAP3-47.50	TAK3-47.50	TAN3-47.50	TAM3-47.50	TAX3-47.50
3-D	—	1.8740	47.60	1/4	TAP3-47.60	TAK3-47.60	TAN3-47.60	TAM3-47.60	TAX3-47.60
3-D	1-7/8	1.8752	47.63	1/4	TAP3-47.63	TAK3-47.63	TAN3-47.63	TAM3-47.63	TAX3-47.63

Inserts sold in multiples of 1.

Sub Series Holders (A, B, C, D)

Sub series holders are recommended when running carbide inserts toward the upper end of the series drill range, as well as in tougher applications requiring more insert support and holder strength. **NOTE:** Only specified sub series inserts should be used with equivalent or smaller sub series holders.

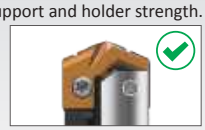

A Series Insert + A Series Holder

C Series Insert + A Series Holder

C Series Insert + C Series Holder

A Series Insert + C Series Holder

A25: 44 - 47

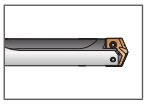

Key on A25: 1

A25: 50 - 57

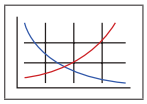

Sizes not shown are available upon request.
When ordering, please follow the example below:

Imperial:	0.5180", steel, 0 series = use Part No. **TAP0-13.16**
Metric:	13.16 mm, steel, 0 series = use Part No. **TAP0-13.16**

T-A Pro Drill Holders

3 Series Imperial | Diameter Range: 1.3798" - 1.8820"

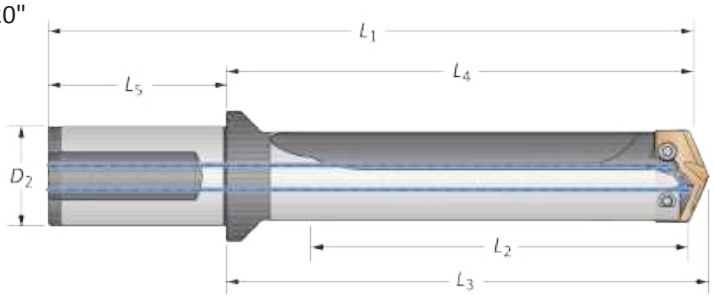

	Body						Shank			
	Length	Sub Series	L_2	L_4	L_3	L_1	L_5	D_2	Flat	Part No.
	Stub	A	1.618	3.634	3.821	6.322	2.688	1-1/2	Yes	**HTA3A01-150F**
	Stub	A	1.618	3.634	3.821	6.322	2.688	1-1/2	No	**HTA3A01-150C**
	Stub	B	1.618	3.634	3.821	6.322	2.688	1-1/2	Yes	**HTA3B01-150F**
	Stub	B	1.618	3.634	3.821	6.322	2.688	1-1/2	No	**HTA3B01-150C**
	Stub	C	1.618	3.634	3.821	6.322	2.688	1-1/2	Yes	**HTA3C01-150F**
	Stub	C	1.618	3.634	3.821	6.322	2.688	1-1/2	No	**HTA3C01-150C**
	Stub	D	1.618	3.634	3.821	6.322	2.688	1-1/2	Yes	**HTA3D01-150F**
	Stub	D	1.618	3.634	3.821	6.322	2.688	1-1/2	No	**HTA3D01-150C**
	3xD	A	4.854	7.089	7.276	9.777	2.688	1-1/2	Yes	**HTA3A03-150F**
	3xD	A	4.854	7.089	7.276	9.777	2.688	1-1/2	No	**HTA3A03-150C**
	3xD	B	4.854	7.089	7.276	9.777	2.688	1-1/2	Yes	**HTA3B03-150F**
	3xD	B	4.854	7.089	7.276	9.777	2.688	1-1/2	No	**HTA3B03-150C**
	3xD	C	4.854	7.089	7.276	9.777	2.688	1-1/2	Yes	**HTA3C03-150F**
	3xD	C	4.854	7.089	7.276	9.777	2.688	1-1/2	No	**HTA3C03-150C**
	3xD	D	4.854	7.089	7.276	9.777	2.688	1-1/2	Yes	**HTA3D03-150F**
i	3xD	D	4.854	7.089	7.276	9.777	2.688	1-1/2	No	**HTA3D03-150C**
	5xD	A	8.090	10.325	10.512	13.013	2.688	1-1/2	Yes	**HTA3A05-150F**
	5xD	A	8.090	10.325	10.512	13.013	2.688	1-1/2	No	**HTA3A05-150C**
	5xD	B	8.090	10.325	10.512	13.013	2.688	1-1/2	Yes	**HTA3B05-150F**
	5xD	B	8.090	10.325	10.512	13.013	2.688	1-1/2	No	**HTA3B05-150C**
	5xD	C	8.090	10.325	10.512	13.013	2.688	1-1/2	Yes	**HTA3C05-150F**
	5xD	C	8.090	10.325	10.512	13.013	2.688	1-1/2	No	**HTA3C05-150C**
	5xD	D	8.090	10.325	10.512	13.013	2.688	1-1/2	Yes	**HTA3D05-150F**
	5xD	D	8.090	10.325	10.512	13.013	2.688	1-1/2	No	**HTA3D05-150C**
	7xD	A	11.326	13.561	13.748	16.249	2.688	1-1/2	Yes	**HTA3A07-150F**
	7xD	A	11.326	13.561	13.748	16.249	2.688	1-1/2	No	**HTA3A07-150C**
	7xD	B	11.326	13.561	13.748	16.249	2.688	1-1/2	Yes	**HTA3B07-150F**
	7xD	B	11.326	13.561	13.748	16.249	2.688	1-1/2	No	**HTA3B07-150C**
	7xD	C	11.326	13.561	13.748	16.249	2.688	1-1/2	Yes	**HTA3C07-150F**
	7xD	C	11.326	13.561	13.748	16.249	2.688	1-1/2	No	**HTA3C07-150C**
	7xD	D	11.326	13.561	13.748	16.249	2.688	1-1/2	Yes	**HTA3D07-150F**
	7xD	D	11.326	13.561	13.748	16.249	2.688	1-1/2	No	**HTA3D07-150C**

Sub Series	3 Series Holder Diameter Range	
	Imperial (inch)	Metric (mm)
3A	1.3798" - 1.8820"	35.05 mm - 47.80 mm
3B	1.4880" - 1.8820"	37.80 mm - 47.80 mm
3C	1.6140" - 1.8820"	41.00 mm - 47.80 mm
3D	1.7479" - 1.8820"	44.40 mm - 47.80 mm

Connection Accessories

Insert Screws	Nylon Locking Screws	Insert Driver	Admissible Tightening Torque*
7514-IP20-1	7514N-IP20-1	8IP-20	121.3 in-lbs (1370 N-cm)

*Tightening torques are calculated with a friction coefficient of μ = 0.14 and develop 90% of ultimate yield strength.

⚠ WARNING Refer to Speed and Feed charts for recommended adjustments to speeds and feeds. Refer to page **A25: 60** for deep hole drilling guidelines in this section of the catalog. Visit **www.alliedmachine.com/DeepHoleGuidelines** for the most up-to-date information and procedures. Factory technical assistance is available for your specific applications through our Application Engineering department.
ext: **7611** | *email:* **appeng@alliedmachine.com**

A25: 40 - 43

A25: 50 - 57

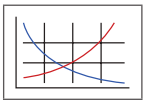

i = Imperial (in)
m = Metric (mm)
Screws sold in multiples of 10.

T-A Pro Drill Holders

3 Series Imperial | Diameter Range: 1.3798" - 1.8820"

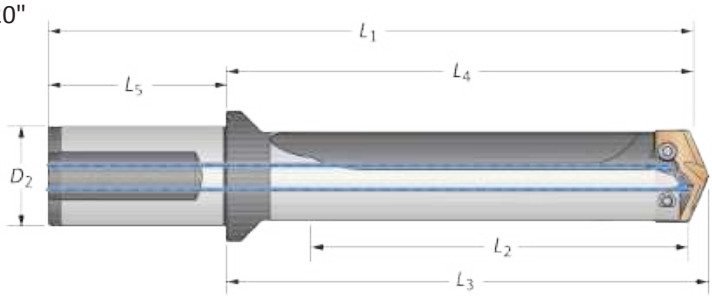

	Body						Shank			
	Length	Sub Series	L_2	L_4	L_3	L_1	L_5	D_2	Flat	Part No.
	10xD	A	16.180	18.415	18.602	21.103	2.688	1-1/2	Yes	⚠ HTA3A10-150F
	10xD	A	16.180	18.415	18.602	21.103	2.688	1-1/2	No	⚠ HTA3A10-150C
	10xD	B	16.180	18.415	18.602	21.103	2.688	1-1/2	Yes	⚠ HTA3B10-150F
	10xD	B	16.180	18.415	18.602	21.103	2.688	1-1/2	No	⚠ HTA3B10-150C
	10xD	C	16.180	18.415	18.602	21.103	2.688	1-1/2	Yes	⚠ HTA3C10-150F
	10xD	C	16.180	18.415	18.602	21.103	2.688	1-1/2	No	⚠ HTA3C10-150C
	10xD	D	16.180	18.415	18.602	21.103	2.688	1-1/2	Yes	⚠ HTA3D10-150F
	10xD	D	16.180	18.415	18.602	21.103	2.688	1-1/2	No	⚠ HTA3D10-150C
	12xD	A	19.416	21.651	21.838	24.339	2.688	1-1/2	Yes	⚠ HTA3A12-150F
	12xD	A	19.416	21.651	21.838	24.339	2.688	1-1/2	No	⚠ HTA3A12-150C
	12xD	B	19.416	21.651	21.838	24.339	2.688	1-1/2	Yes	⚠ HTA3B12-150F
	12xD	B	19.416	21.651	21.838	24.339	2.688	1-1/2	No	⚠ HTA3B12-150C
ⓘ	12xD	C	19.416	21.651	21.838	24.339	2.688	1-1/2	Yes	⚠ HTA3C12-150F
	12xD	C	19.416	21.651	21.838	24.339	2.688	1-1/2	No	⚠ HTA3C12-150C
	12xD	D	19.416	21.651	21.838	24.339	2.688	1-1/2	Yes	⚠ HTA3D12-150F
	12xD	D	19.416	21.651	21.838	24.339	2.688	1-1/2	No	⚠ HTA3D12-150C
	15xD	A	24.270	26.505	26.692	29.193	2.688	1-1/2	Yes	⚠ HTA3A15-150F
	15xD	A	24.270	26.505	26.692	29.193	2.688	1-1/2	No	⚠ HTA3A15-150C
	15xD	B	24.270	26.505	26.692	29.193	2.688	1-1/2	Yes	⚠ HTA3B15-150F
	15xD	B	24.270	26.505	26.692	29.193	2.688	1-1/2	No	⚠ HTA3B15-150C
	15xD	C	24.270	26.505	26.692	29.193	2.688	1-1/2	Yes	⚠ HTA3C15-150F
	15xD	C	24.270	26.505	26.692	29.193	2.688	1-1/2	No	⚠ HTA3C15-150C
	15xD	D	24.270	26.505	26.692	29.193	2.688	1-1/2	Yes	⚠ HTA3D15-150F
	15xD	D	24.270	26.505	26.692	29.193	2.688	1-1/2	No	⚠ HTA3D15-150C

Sub Series	3 Series Holder Diameter Range	
	Imperial (inch)	Metric (mm)
3A	1.3798" - 1.8820"	35.05 mm - 47.80 mm
3B	1.4880" - 1.8820"	37.80 mm - 47.80 mm
3C	1.6140" - 1.8820"	41.00 mm - 47.80 mm
3D	1.7479" - 1.8820"	44.40 mm - 47.80 mm

Connection Accessories

Insert Screws	Nylon Locking Screws	Insert Driver	Admissible Tightening Torque*
7514-IP20-1	7514N-IP20-1	8IP-20	121.3 in-lbs (1370 N-cm)

*Tightening torques are calculated with a friction coefficient of μ = 0.14 and develop 90% of ultimate yield strength.

⚠ **WARNING** Refer to Speed and Feed charts for recommended adjustments to speeds and feeds. Refer to page **A25: 60** for deep hole drilling guidelines in this section of the catalog. Visit **www.alliedmachine.com/DeepHoleGuidelines** for the most up-to-date information and procedures. Factory technical assistance is available for your specific applications through our Application Engineering department.
ext: **7611** | *email:* **appeng@alliedmachine.com**

A25: 40 - 43
Key on A25: 1
A25: 50 - 57

ⓘ = Imperial (in)
ⓜ = Metric (mm)
Screws sold in multiples of 10.

T-A Pro Drill Holders

3 Series Metric | Diameter Range: 35.05 mm - 47.80 mm

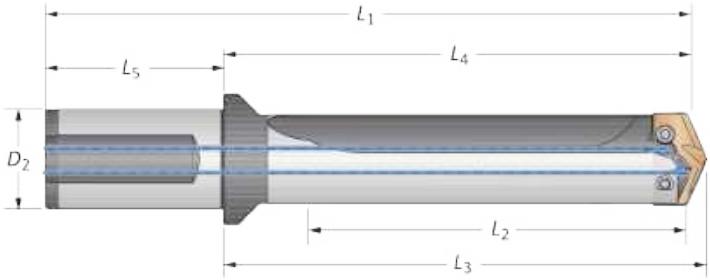

	Body						Shank			
	Length	Sub Series	L_2	L_4	L_3	L_1	L_5	D_2	Flat	Part No.
	Stub	A	41.1	92.3	97.1	162.3	70.0	40	Yes	**HTA3A01-40FM**
	Stub	A	41.1	92.3	97.1	162.3	70.0	40	No	**HTA3A01-40CM**
	Stub	B	41.1	92.3	97.1	162.3	70.0	40	Yes	**HTA3B01-40FM**
	Stub	B	41.1	92.3	97.1	162.3	70.0	40	No	**HTA3B01-40CM**
	Stub	C	41.1	92.3	97.1	162.3	70.0	40	Yes	**HTA3C01-40FM**
	Stub	C	41.1	92.3	97.1	162.3	70.0	40	No	**HTA3C01-40CM**
	Stub	D	41.1	92.3	97.1	162.3	70.0	40	Yes	**HTA3D01-40FM**
	Stub	D	41.1	92.3	97.1	162.3	70.0	40	No	**HTA3D01-40CM**
	3xD	A	123.3	180.1	184.8	250.1	70.0	40	Yes	**HTA3A03-40FM**
	3xD	A	123.3	180.1	184.8	250.1	70.0	40	No	**HTA3A03-40CM**
	3xD	B	123.3	180.1	184.8	250.1	70.0	40	Yes	**HTA3B03-40FM**
	3xD	B	123.3	180.1	184.8	250.1	70.0	40	No	**HTA3B03-40CM**
	3xD	C	123.3	180.1	184.8	250.1	70.0	40	Yes	**HTA3C03-40FM**
	3xD	C	123.3	180.1	184.8	250.1	70.0	40	No	**HTA3C03-40CM**
	3xD	D	123.3	180.1	184.8	250.1	70.0	40	Yes	**HTA3D03-40FM**
ⓜ	3xD	D	123.3	180.1	184.8	250.1	70.0	40	No	**HTA3D03-40CM**
	5xD	A	205.5	262.3	267.0	332.3	70.0	40	Yes	**HTA3A05-40FM**
	5xD	A	205.5	262.3	267.0	332.3	70.0	40	No	**HTA3A05-40CM**
	5xD	B	205.5	262.3	267.0	332.3	70.0	40	Yes	**HTA3B05-40FM**
	5xD	B	205.5	262.3	267.0	332.3	70.0	40	No	**HTA3B05-40CM**
	5xD	C	205.5	262.3	267.0	332.3	70.0	40	Yes	**HTA3C05-40FM**
	5xD	C	205.5	262.3	267.0	332.3	70.0	40	No	**HTA3C05-40CM**
	5xD	D	205.5	262.3	267.0	332.3	70.0	40	Yes	**HTA3D05-40FM**
	5xD	D	205.5	262.3	267.0	332.3	70.0	40	No	**HTA3D05-40CM**
	7xD	A	287.7	344.4	349.2	414.5	70.0	40	Yes	**HTA3A07-40FM**
	7xD	A	287.7	344.4	349.2	414.5	70.0	40	No	**HTA3A07-40CM**
	7xD	B	287.7	344.4	349.2	414.5	70.0	40	Yes	**HTA3B07-40FM**
	7xD	B	287.7	344.4	349.2	414.5	70.0	40	No	**HTA3B07-40CM**
	7xD	C	287.7	344.4	349.2	414.5	70.0	40	Yes	**HTA3C07-40FM**
	7xD	C	287.7	344.4	349.2	414.5	70.0	40	No	**HTA3C07-40CM**
	7xD	D	287.7	344.4	349.2	414.5	70.0	40	Yes	**HTA3D07-40FM**
	7xD	D	287.7	344.4	349.2	414.5	70.0	40	No	**HTA3D07-40CM**

Sub Series	3 Series Holder Diameter Range	
	Imperial (inch)	Metric (mm)
3A	1.3798" - 1.8820"	35.05 mm - 47.80 mm
3B	1.4880" - 1.8820"	37.80 mm - 47.80 mm
3C	1.6140" - 1.8820"	41.00 mm - 47.80 mm
3D	1.7479" - 1.8820"	44.40 mm - 47.80 mm

Connection Accessories

Insert Screws	Nylon Locking Screws	Insert Driver	Admissible Tightening Torque*
7514-IP20-1	7514N-IP20-1	8IP-20	121.3 in-lbs (1370 N-cm)

*Tightening torques are calculated with a friction coefficient of μ = 0.14 and develop 90% of ultimate yield strength.

⚠ WARNING Refer to Speed and Feed charts for recommended adjustments to speeds and feeds. Refer to page **A25: 60** for deep hole drilling guidelines in this section of the catalog. Visit **www.alliedmachine.com/DeepHoleGuidelines** for the most up-to-date information and procedures. Factory technical assistance is available for your specific applications through our Application Engineering department.
ext: **7611** | *email:* **appeng@alliedmachine.com**

A25: 40 - 43

A25: 50 - 57

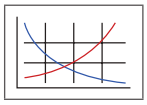

ⓘ = Imperial (in)
ⓜ = Metric (mm)
Screws sold in multiples of 10.

T-A Pro Drill Holders

3 Series Metric | Diameter Range: 35.05 mm - 47.80 mm

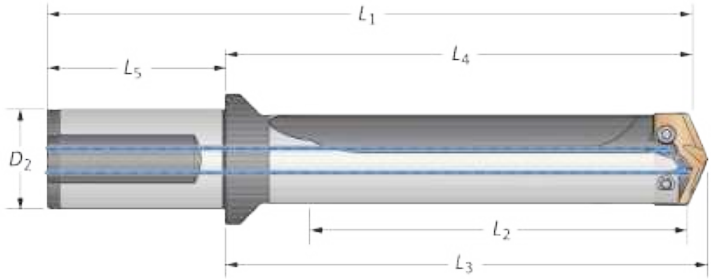

	Body						Shank			
	Length	Sub Series	L_2	L_4	L_3	L_1	L_5	D_2	Flat	Part No.
m	10xD	A	411.0	467.7	472.5	537.7	70.0	40	Yes	HTA3A10-40FM
	10xD	A	411.0	467.7	472.5	537.7	70.0	40	No	HTA3A10-40CM
	10xD	B	411.0	467.7	472.5	537.7	70.0	40	Yes	HTA3B10-40FM
	10xD	B	411.0	467.7	472.5	537.7	70.0	40	No	HTA3B10-40CM
	10xD	C	411.0	467.7	472.5	537.7	70.0	40	Yes	HTA3C10-40FM
	10xD	C	411.0	467.7	472.5	537.7	70.0	40	No	HTA3C10-40CM
	10xD	D	411.0	467.7	472.5	537.7	70.0	40	Yes	HTA3D10-40FM
	10xD	D	411.0	467.7	472.5	537.7	70.0	40	No	HTA3D10-40CM
	12xD	A	493.2	549.9	554.7	619.9	70.0	40	Yes	HTA3A12-40FM
	12xD	A	493.2	549.9	554.7	619.9	70.0	40	No	HTA3A12-40CM
	12xD	B	493.2	549.9	554.7	619.9	70.0	40	Yes	HTA3B12-40FM
	12xD	B	493.2	549.9	554.7	619.9	70.0	40	No	HTA3B12-40CM
	12xD	C	493.2	549.9	554.7	619.9	70.0	40	Yes	HTA3C12-40FM
	12xD	C	493.2	549.9	554.7	619.9	70.0	40	No	HTA3C12-40CM
	12xD	D	493.2	549.9	554.7	619.9	70.0	40	Yes	HTA3D12-40FM
	12xD	D	493.2	549.9	554.7	619.9	70.0	40	No	HTA3D12-40CM
	15xD	A	616.5	673.2	678.0	743.2	70.0	40	Yes	HTA3A15-40FM
	15xD	A	616.5	673.2	678.0	743.2	70.0	40	No	HTA3A15-40CM
	15xD	B	616.5	673.2	678.0	743.2	70.0	40	Yes	HTA3B15-40FM
	15xD	B	616.5	673.2	678.0	743.2	70.0	40	No	HTA3B15-40CM
	15xD	C	616.5	673.2	678.0	743.2	70.0	40	Yes	HTA3C15-40FM
	15xD	C	616.5	673.2	678.0	743.2	70.0	40	No	HTA3C15-40CM
	15xD	D	616.5	673.2	678.0	743.2	70.0	40	Yes	HTA3D15-40FM
	15xD	D	616.5	673.2	678.0	743.2	70.0	40	No	HTA3D15-40CM

Sub Series	3 Series Holder Diameter Range	
	Imperial (inch)	Metric (mm)
3A	1.3798" - 1.8820"	35.05 mm - 47.80 mm
3B	1.4880" - 1.8820"	37.80 mm - 47.80 mm
3C	1.6140" - 1.8820"	41.00 mm - 47.80 mm
3D	1.7479" - 1.8820"	44.40 mm - 47.80 mm

Connection Accessories

Insert Screws	Nylon Locking Screws	Insert Driver	Admissible Tightening Torque*
7514-IP20-1	7514N-IP20-1	8IP-20	121.3 in-lbs (1370 N-cm)

*Tightening torques are calculated with a friction coefficient of μ = 0.14 and develop 90% of ultimate yield strength.

WARNING Refer to Speed and Feed charts for recommended adjustments to speeds and feeds. Refer to page **A25: 60** for deep hole drilling guidelines in this section of the catalog. Visit **www.alliedmachine.com/DeepHoleGuidelines** for the most up-to-date information and procedures. Factory technical assistance is available for your specific applications through our Application Engineering department.
ext: **7611** | *email:* **appeng@alliedmachine.com**

A25: 40 - 43

Key on A25: 1

A25: 50 - 57

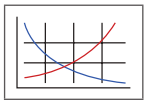

ⓘ = Imperial (in)
ⓜ = Metric (mm)
Screws sold in multiples of 10.

T-A Pro Kits

0.4999" - 1.3797" (12.70 mm - 35.04 mm) | Holders

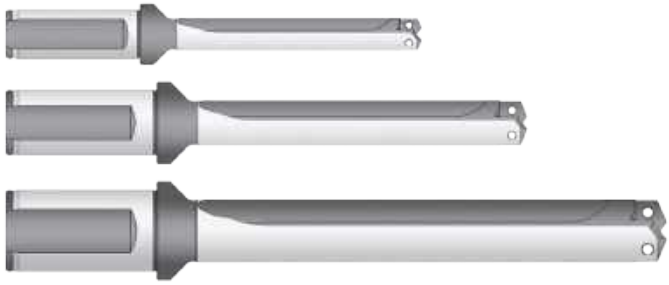

Imperial 3xD Holder Kits

	Series	Length	Drill Depth	Shank Diameter	Qty	HTA03F-KIT Flanged with flat	HTA03C-KIT Cylindrical (no flat)
i	0-A	3xD	1.809	0.750	1	HTA0A03-075F	HTA0A03-075C
	1-A	3xD	2.475	1.000	1	HTA1A03-100F	HTA1A03-100C
	2-A	3xD	3.513	1.250	1	HTA2A03-125F	HTA2A03-125C

Imperial 5xD Holder Kits

	Series	Length	Drill Depth	Shank Diameter	Qty	HTA05F-KIT Flanged with flat	HTA05C-KIT Cylindrical (no flat)
i	0-A	5xD	3.015	0.750	1	HTA0A05-075F	HTA0A05-075C
	1-A	5xD	4.125	1.000	1	HTA1A05-100F	HTA1A05-100C
	2-A	5xD	5.855	1.250	1	HTA2A05-125F	HTA2A05-125C

Metric 3xD Holder Kits

	Series	Length	Drill Depth	Shank Diameter	Qty	HTA03FM-KIT Flanged with flat	HTA03CM-KIT Cylindrical (no flat)
m	0-A	3xD	45.9	20	1	HTA0A03-20FM	HTA0A03-20CM
	1-A	3xD	62.9	25	1	HTA1A03-25FM	HTA1A03-25CM
	2-A	3xD	89.2	32	1	HTA2A03-32FM	HTA2A03-32CM

Metric 5xD Holder Kits

	Series	Length	Drill Depth	Shank Diameter	Qty	HTA05FM-KIT Flanged with flat	HTA05CM-KIT Cylindrical (no flat)
m	0-A	5xD	76.6	20	1	HTA0A05-20FM	HTA0A05-20CM
	1-A	5xD	104.8	25	1	HTA1A05-25FM	HTA1A05-25CM
	2-A	5xD	148.7	32	1	HTA2A05-32FM	HTA2A05-32CM

A25: 50 - 57
Key on A25: 1

i = Imperial (in)
m = Metric (mm)

T-A Pro Kits

0.4999" - 1.3797" (12.70 mm - 35.04 mm) | Inserts

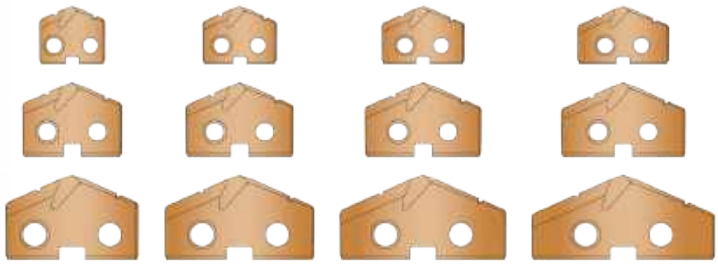

Imperial Insert Kit

	Series	Diameter Fractional	Diameter inch	Diameter mm	Qty	TAP-IMP-KIT (P)	TAK-IMP-KIT (K)	TAN-IMP-KIT (N)	TAM-IMP-KIT (M)	TAX-IMP-KIT (X)
i	0-A	1/2	0.5000	12.70	2	TAP0-12.70	TAK0-12.70	TAN0-12.70	TAM0-12.70	TAX0-12.70
	0-B	9/16	0.5626	14.29	2	TAP0-14.29	TAK0-14.29	TAN0-14.29	TAM0-14.29	TAX0-14.29
	0-C	5/8	0.6252	15.88	2	TAP0-15.88	TAK0-15.88	TAN0-15.88	TAM0-15.88	TAX0-15.88
	0-D	11/16	0.6874	17.46	2	TAP0-17.46	TAK0-17.46	TAN0-17.46	TAM0-17.46	TAX0-17.46
	1-B	3/4	0.7500	19.05	2	TAP1-19.05	TAK1-19.05	TAN1-19.05	TAM1-19.05	TAX1-19.05
	1-C	13/16	0.8126	20.64	2	TAP1-20.64	TAK1-20.64	TAN1-20.64	TAM1-20.64	TAX1-20.64
	1-C	7/8	0.8752	22.23	2	TAP1-22.23	TAK1-22.23	TAN1-22.23	TAM1-22.23	TAX1-22.23
	1-D	15/16	0.9374	23.81	2	TAP1-23.81	TAK1-23.81	TAN1-23.81	TAM1-23.81	TAX1-23.81
	2-B	1	1.0000	25.40	2	TAP2-25.40	TAK2-25.40	TAN2-25.40	TAM2-25.40	TAX2-25.40
	2-C	1-1/8	1.1252	28.58	2	TAP2-28.58	TAK2-28.58	TAN2-28.58	TAM2-28.58	TAX2-28.58
	2-D	1-1/4	1.2500	31.75	2	TAP2-31.75	TAK2-31.75	TAN2-31.75	TAM2-31.75	TAX2-31.75
	2-D	1-3/8	1.3752	34.93	2	TAP2-34.93	TAK2-34.93	TAN2-34.93	TAM2-34.93	TAX2-34.93

Metric Insert Kit

	Series	Diameter Fractional	Diameter inch	Diameter mm	Qty	TAP-MET-KIT (P)	TAK-MET-KIT (K)	TAN-MET-KIT (N)	TAM-MET-KIT (M)	TAX-MET-KIT (X)
m	0-A	—	0.5118	13.00	2	TAP0-13.00	TAK0-13.00	TAN0-13.00	TAM0-13.00	TAX0-13.00
	0-B	—	0.5512	14.00	2	TAP0-14.00	TAK0-14.00	TAN0-14.00	TAM0-14.00	TAX0-14.00
	0-C	—	0.6299	16.00	2	TAP0-16.00	TAK0-16.00	TAN0-16.00	TAM0-16.00	TAX0-16.00
	0-D	—	0.6890	17.50	2	TAP0-17.50	TAK0-17.50	TAN0-17.50	TAM0-17.50	TAX0-17.50
	1-A	—	0.7087	18.00	2	TAP1-18.00	TAK1-18.00	TAN1-18.00	TAM1-18.00	TAX1-18.00
	1-B	—	0.7874	20.00	2	TAP1-20.00	TAK1-20.00	TAN1-20.00	TAM1-20.00	TAX1-20.00
	1-C	—	0.8661	22.00	2	TAP1-22.00	TAK1-22.00	TAN1-22.00	TAM1-22.00	TAX1-22.00
	1-D	—	0.9449	24.00	2	TAP1-24.00	TAK1-24.00	TAN1-24.00	TAM1-24.00	TAX1-24.00
	2-A	63/64	0.9843	25.00	2	TAP2-25.00	TAK2-25.00	TAN2-25.00	TAM2-25.00	TAX2-25.00
	2-C	—	1.1811	30.00	2	TAP2-30.00	TAK2-30.00	TAN2-30.00	TAM2-30.00	TAX2-30.00
	2-D	—	1.2598	32.00	2	TAP2-32.00	TAK2-32.00	TAN2-32.00	TAM2-32.00	TAX2-32.00
	2-D	—	1.3780	35.00	2	TAP2-35.00	TAK2-35.00	TAN2-35.00	TAM2-35.00	TAX2-35.00

T-A PRO MATERIAL LIBRARY:
SEE IT IN ACTION.

A25: 50 - 57
Key on A25: 1

i = Imperial (in)
m = Metric (mm)

Carbide Recommended Drilling Data | Imperial (inch)

ISO	Material	Hardness (BHN)	Insert Grade	Speed (SFM)	Feed Rate (IPR) by Diameter: Y / Z Series (0.3739" - 0.4998")	0 Series (0.4999" - 0.6946")	1 Series (0.6947" - 0.9596")	2 Series (0.9597" - 1.3797")	3 Series (1.3798" - 1.8820")
P	**Free-Machining Steel** 1118, 1215, 12L14, etc.	100 - 150	P	475	0.007	0.010	0.013	0.016	0.020
		150 - 200	P	440	0.007	0.010	0.013	0.016	0.020
		200 - 250	P	410	0.006	0.010	0.013	0.016	0.020
	Low-Carbon Steel 1010, 1020, 1025, 1522, 1144, etc.	85 - 125	P	425	0.006❖	0.009	0.012	0.015	0.019
		125 - 175	P	410	0.006❖	0.009	0.012	0.015	0.019
		175 - 225	P	385	0.005❖	0.008	0.010	0.014	0.018
		225 - 275	P	355	0.005❖	0.008	0.010	0.014	0.018
	Medium-Carbon Steel 1030, 1040, 1050, 1527, 1140, 1151, etc.	125 - 175	P	410	0.006	0.009	0.012	0.015	0.019
		175 - 225	P	385	0.005	0.008	0.010	0.014	0.018
		225 - 275	P	355	0.005	0.008	0.010	0.014	0.018
		275 - 325	P	330	0.004	0.007	0.009	0.012	0.016
	Alloy Steel 4140, 5140, 8640, etc.	125 - 175	P	420	0.006	0.009	0.012	0.014	0.017
		175 - 225	P	390	0.005	0.008	0.011	0.014	0.017
		225 - 275	P	360	0.005	0.008	0.011	0.014	0.017
		275 - 325	P	340	0.004	0.007	0.010	0.012	0.015
		325 - 375	P	310	0.003	0.007	0.010	0.012	0.015
	High-Strength Alloy 4340, 4330V, 300M, etc.	225 - 300	P	350	0.004	0.007	0.010	0.013	0.015
		300 - 350	P	325	0.003	0.006	0.009	0.012	0.014
		350 - 400	P	300	0.003	0.006	0.008	0.011	0.013
	Structural Steel A36, A285, A516, etc.	100 - 150	P	400	0.006❖	0.010	0.012	0.014	0.018
		150 - 250	P	340	0.005❖	0.009	0.010	0.012	0.016
		250 - 350	P	280	0.004❖	0.008	0.009	0.010	0.014
	Tool Steel H-13, H-21, A-4, S-3, etc.	150 - 200	P	220	0.004	0.006	0.008	0.010	0.012
		200 - 250	P	180	0.004	0.006	0.008	0.010	0.012
S	**High-Temp Alloy** Hastelloy B, Inconel 600, etc.	140 - 220	M	110	0.002❖	0.005	0.007	0.008	0.009
		220 - 310	M	85	0.002❖	0.003	0.005	0.006	0.007
	Titanium Alloy	140 - 220	M	150	0.003❖	0.004	0.007	0.008	0.009
		220 - 310	M	120	0.003❖	0.003	0.005	0.006	0.007
	Aerospace Alloy S82	185 - 275	M	150	0.003❖	0.004	0.007	0.008	0.009
		275 - 350	M	120	0.003❖	0.003	0.005	0.006	0.007

❖ Contact our Application Engineering department for assistance when machining these materials.

7xD and 10xD Adjustment Example (0.80 Adjustment)

Data • Adjustment Value	Speed/Feed (7xD)
200 SFM • 0.80	= 160 SFM
0.008 IPR • 0.80	= 0.0064 IPR

12xD and 15xD Adjustment Example (0.70 Adjustment)

Speed • Adjustment Value	Speed/Feed (12xD)
200 SFM • 0.70	= 140 SFM
0.008 IPR • 0.70	= 0.0056 IPR

Coolant Recommendations

Series	Stub, 3xD, 5xD: Pressure PSI	Stub, 3xD, 5xD: Flow Rate GPM	7xD, 10xD: Pressure PSI	7xD, 10xD: Flow Rate GPM	12xD, 15xD: Pressure PSI	12xD, 15xD: Flow Rate GPM
Y	450	4	550	6	650	8
Z	450	4	550	6	650	8
0	350	6	450	9	550	12
1	300	8	400	10	500	12
2	250	10	350	13	450	16
3	200	12	300	14	400	18

⚠ WARNING **Tool failure can cause serious injury. To prevent:**
- When using holders without support bushing, use a short T-A Pro holder to establish an initial hole that is a minimum of 2 diameters deep.
- Do not rotate tool holders more than 50 RPM unless it is engaged with the workpiece or fixture.

Visit **www.alliedmachine.com/DeepHoleGuidelines** for the most up-to-date information and procedures.
Factory technical assistance is available for your specific applications through our Application Engineering department. *ext:* **7611** | *email:* **appeng@alliedmachine.com**

IMPORTANT: The speeds and feeds listed above are a general starting point for all applications. Refer to the coolant recommendation chart for coolant requirements to run at the recommended speeds and feeds. Factory technical assistance is available through our Application Engineering department. For 7xD, 10xD, 12xD, and 15xD holder lengths, see adjustment example above.

Carbide Recommended Drilling Data | Imperial (inch)

ISO	Material	Hardness (BHN)	Insert Grade	Speed (SFM)	Feed Rate (IPR) by Diameter: Y / Z Series (0.3739" - 0.4998")	0 Series (0.4999" - 0.6946")	1 Series (0.6947" - 0.9596")	2 Series (0.9597" - 1.3797")	3 Series (1.3798" - 1.8820")
M	**Stainless Steel 400 Series**	185 - 275	M	280	0.005❖	0.009	0.010	0.012	0.013
	416, 420, etc.	275 - 350	M	230	0.004❖	0.008	0.009	0.011	0.012
	Stainless Steel 300 Series	135 - 185	M	280	0.003❖	0.004	0.005	0.008	0.011
	304, 316, 17-4PH, etc.	185 - 275	M	250	0.002❖	0.003	0.004	0.007	0.009
	Stainless Steel 300L Series	135 - 185	M	325	0.003❖	0.004	0.005	0.008	0.011
	304L, 316L, etc.	185 - 275	M	280	0.002❖	0.003	0.004	0.007	0.009
	PH Stainless	275 - 350	M	280	0.003❖	0.004	0.005	0.008	0.011
	17-4, 13-8, 15-5	350 - 425	M	250	0.002❖	0.003	0.004	0.007	0.009
	Super Duplex Stainless Steel	135 - 185	M	250	0.003❖	0.004	0.005	0.008	0.011
		185 - 275	M	230	0.002❖	0.003	0.004	0.007	0.009
H	**Wear Plate**	400	P	70	0.003	0.006	0.008	0.009	0.012
	Hardox®, AR400, T-1, etc.	500	P	45	0.002	0.005	0.007	0.008	0.010
		600	–	–	–	–	–	–	–
	Hardened Steel	300 - 400	P	95	0.003	0.006	0.008	0.009	0.012
		400 - 500	P	45	0.002	0.005	0.007	0.008	0.010
K	**SG / Nodular Cast Iron**	120 - 150	K	600	0.007	0.012	0.016	0.020	0.024
		150 - 200	K	550	0.006	0.011	0.014	0.018	0.022
		200 - 220	K	500	0.006	0.009	0.012	0.016	0.018
		220 - 260	K	450	0.005	0.007	0.009	0.012	0.014
		260 - 320	K	400	0.004	0.006	0.007	0.009	0.012
N	**Cast Aluminum**	30	N	1100	0.008	0.013	0.016	0.020	0.022
		180	N	600	0.008	0.013	0.016	0.018	0.022
	Wrought Aluminum	30	N	1100	0.009	0.013	0.017	0.020	0.024
		180	N	600	0.005	0.007	0.010	0.013	0.016
	Aluminum Bronze	100 - 200	N	500	0.006	0.011	0.014	0.018	0.022
		200 - 250	N	300	0.005	0.007	0.009	0.012	0.014
	Brass	100	N	650	0.007	0.012	0.016	0.020	0.024
	Copper	60	N	430	0.002	0.003	0.006	0.008	0.010

❖ Contact our Application Engineering department for assistance when machining these materials.

7xD and 10xD Adjustment Example (0.80 Adjustment)

Data • Adjustment Value	Speed/Feed (7xD)
200 SFM • 0.80	= 160 SFM
0.008 IPR • 0.80	= 0.0064 IPR

12xD and 15xD Adjustment Example (0.70 Adjustment)

Speed • Adjustment Value	Speed/Feed (12xD)
200 SFM • 0.70	= 140 SFM
0.008 IPR • 0.70	= 0.0056 IPR

Coolant Recommendations

Series	Stub, 3xD, 5xD: Pressure PSI	Stub, 3xD, 5xD: Flow Rate GPM	7xD, 10xD: Pressure PSI	7xD, 10xD: Flow Rate GPM	12xD, 15xD: Pressure PSI	12xD, 15xD: Flow Rate GPM
Y	450	4	550	6	650	8
Z	450	4	550	6	650	8
0	350	6	450	9	550	12
1	300	8	400	10	500	12
2	250	10	350	13	450	16
3	200	12	300	14	400	18

⚠ **WARNING** **Tool failure can cause serious injury. To prevent:**
- When using holders without support bushing, use a short T-A Pro holder to establish an initial hole that is a minimum of 2 diameters deep.
- Do not rotate tool holders more than 50 RPM unless it is engaged with the workpiece or fixture.

Visit **www.alliedmachine.com/DeepHoleGuidelines** for the most up-to-date information and procedures.
Factory technical assistance is available for your specific applications through our Application Engineering department. *ext:* **7611** | *email:* **appeng@alliedmachine.com**

IMPORTANT: The speeds and feeds listed above are a general starting point for all applications. Refer to the coolant recommendation chart for coolant requirements to run at the recommended speeds and feeds. Factory technical assistance is available through our Application Engineering department. For 7xD, 10xD, 12xD, and 15xD holder lengths, see adjustment example above.

High-Speed Steel Recommended Drilling Data | Imperial (inch)

ISO	Material	Hardness (BHN)	Insert Grade	Speed (SFM)	Feed Rate (IPR) by Diameter: Y / Z Series (0.3739" - 0.4998")	0 Series (0.4999" - 0.6946")	1 Series (0.6947" - 0.9596")	2 Series (0.9597" - 1.3797")	3 Series (1.3798" - 1.8820")
P	**Free-Machining Steel** 1118, 1215, 12L14, etc.	100 - 150	X	350	0.006	0.010	0.013	0.016	0.020
		150 - 200	X	325	0.006	0.010	0.013	0.016	0.020
		200 - 250	X	300	0.005	0.010	0.013	0.016	0.020
	Low-Carbon Steel 1010, 1020, 1025, 1522, 1144, etc.	85 - 125	X	315	0.006❖	0.009	0.012	0.015	0.019
		125 - 175	X	300	0.005❖	0.009	0.012	0.015	0.019
		175 - 225	X	285	0.005❖	0.008	0.010	0.014	0.018
		225 - 275	X	265	0.005❖	0.008	0.010	0.014	0.018
	Medium-Carbon Steel 1030, 1040, 1050, 1527, 1140, 1151, etc.	125 - 175	X	300	0.006	0.009	0.012	0.015	0.019
		175 - 225	X	285	0.005	0.008	0.010	0.014	0.018
		225 - 275	X	265	0.005	0.008	0.010	0.014	0.018
		275 - 325	X	235	0.004	0.007	0.009	0.012	0.016
	Alloy Steel 4140, 5140, 8640, etc.	125 - 175	X	250	0.006	0.009	0.012	0.014	0.017
		175 - 225	X	235	0.005	0.008	0.011	0.014	0.017
		225 - 275	X	220	0.005	0.008	0.011	0.014	0.017
		275 - 325	X	205	0.004	0.007	0.010	0.012	0.015
		325 - 375	X	190	0.003	0.007	0.010	0.012	0.015
	High-Strength Alloy 4340, 4330V, 300M, etc.	225 - 300	X	135	0.004	0.007	0.010	0.013	0.015
		300 - 350	X	110	0.003	0.006	0.009	0.012	0.014
		350 - 400	X	90	0.003	0.006	0.008	0.011	0.013
	Structural Steel A36, A285, A516, etc.	100 - 150	X	250	0.006❖	0.010	0.012	0.014	0.018
		150 - 250	X	210	0.005❖	0.009	0.010	0.012	0.016
		250 - 350	X	175	0.004❖	0.008	0.009	0.010	0.014
	Tool Steel H-13, H-21, A-4, S-3, etc.	150 - 200	X	145	0.004	0.006	0.008	0.010	0.012
		200 - 250	X	120	0.004	0.006	0.008	0.010	0.012
S	**High-Temp Alloy** Hastelloy B, Inconel 600, etc.	140 - 220	X	45	0.003❖	0.007	0.008	0.010	0.012
		220 - 310	X	40	0.003❖	0.006	0.007	0.008	0.010
	Titanium Alloy	140 - 220	X	60	0.003	0.007	0.008	0.010	0.012
		220 - 310	X	50	0.003	0.006	0.007	0.008	0.010
	Aerospace Alloy S82	185 - 275	X	125	0.005	0.008	0.009	0.010	0.014
		275 - 350	X	110	0.004	0.007	0.008	0.008	0.012

❖ Contact our Application Engineering department for assistance when machining these materials.

7xD and 10xD Adjustment Example (0.80 Adjustment)

Data • Adjustment Value	Speed/Feed (7xD)
200 SFM • 0.80	= 160 SFM
0.008 IPR • 0.80	= 0.0064 IPR

12xD and 15xD Adjustment Example (0.70 Adjustment)

Speed • Adjustment Value	Speed/Feed (12xD)
200 SFM • 0.70	= 140 SFM
0.008 IPR • 0.70	= 0.0056 IPR

Coolant Recommendations

Series	Stub, 3xD, 5xD: Pressure PSI	Stub, 3xD, 5xD: Flow Rate GPM	7xD, 10xD: Pressure PSI	7xD, 10xD: Flow Rate GPM	12xD, 15xD: Pressure PSI	12xD, 15xD: Flow Rate GPM
Y	450	4	550	6	650	8
Z	450	4	550	6	650	8
0	350	6	450	9	550	12
1	300	8	400	10	500	12
2	250	10	350	13	450	16
3	200	12	300	14	400	18

⚠ WARNING **Tool failure can cause serious injury. To prevent:**
- When using holders without support bushing, use a short T-A Pro holder to establish an initial hole that is a minimum of 2 diameters deep.
- Do not rotate tool holders more than 50 RPM unless it is engaged with the workpiece or fixture.

Visit **www.alliedmachine.com/DeepHoleGuidelines** for the most up-to-date information and procedures.
Factory technical assistance is available for your specific applications through our Application Engineering department. *ext:* **7611** | *email:* **appeng@alliedmachine.com**

IMPORTANT: The speeds and feeds listed above are a general starting point for all applications. Refer to the coolant recommendation chart for coolant requirements to run at the recommended speeds and feeds. Factory technical assistance is available through our Application Engineering department. For 7xD, 10xD, 12xD, and 15xD holder lengths, see adjustment example above.

High-Speed Steel Recommended Drilling Data | Imperial (inch)

ISO	Material	Hardness (BHN)	Insert Grade	Speed (SFM)	Feed Rate (IPR) by Diameter: Y / Z Series (0.3739" - 0.4998")	0 Series (0.4999" - 0.6946")	1 Series (0.6947" - 0.9596")	2 Series (0.9597" - 1.3797")	3 Series (1.3798" - 1.8820")
M	**Stainless Steel 400 Series**	185 - 275	X	125	0.005❖	0.010	0.011	0.012	0.013
	416, 420, etc.	275 - 350	X	110	0.004❖	0.009	0.010	0.011	0.012
	Stainless Steel 300 Series	135 - 185	X	125	0.005❖	0.007	0.008	0.009	0.012
	304, 316, 17-4PH, etc.	185 - 275	X	110	0.004❖	0.006	0.007	0.008	0.011
	PH Stainless	275 - 350	X	95	0.003❖	0.004	0.006	0.008	0.010
	17-4, 13-8, 15-5	350 - 425	X	75	0.003❖	0.004	0.006	0.008	0.010
	Super Duplex Stainless Steel	135 - 185	X	125	0.005❖	0.005	0.006	0.006	0.007
		185 - 275	X	110	0.004❖	0.005	0.005	0.006	0.006
H	**Wear Plate**	400	X	60	0.003	0.006	0.008	0.009	0.012
	Hardox®, AR400, T-1, etc.	500	X	45	0.002	0.005	0.007	0.008	0.010
		600	–	–	–	–	–	–	–
	Hardened Steel	300 - 400	X	75	0.003	0.006	0.008	0.009	0.012
		400 - 500	X	45	0.002	0.005	0.007	0.008	0.010
K	**SG / Nodular Cast Iron**	120 - 150	X	300	0.007	0.012	0.016	0.020	0.024
		150 - 200	X	275	0.006	0.011	0.014	0.018	0.022
		200 - 220	X	240	0.006	0.009	0.012	0.016	0.018
		220 - 260	X	215	0.005	0.007	0.009	0.012	0.014
		260 - 320	X	175	0.004	0.006	0.007	0.009	0.012
N	**Cast Aluminum**	30	X	600	0.008	0.013	0.016	0.020	0.022
		180	X	300	0.008	0.013	0.016	0.018	0.022
	Wrought Aluminum	30	X	900	0.009	0.013	0.017	0.020	0.024
		180	X	600	0.005	0.007	0.010	0.013	0.016
	Aluminum Bronze	100 - 200	X	300	0.006	0.011	0.014	0.018	0.022
		200 - 250	X	250	0.005	0.007	0.009	0.012	0.014
	Brass	100	X	485	0.007	0.012	0.016	0.020	0.024
	Copper	60	X	320	0.002	0.003	0.006	0.008	0.010

❖ Contact our Application Engineering department for assistance when machining these materials.

7xD and 10xD Adjustment Example (0.80 Adjustment)

Data • Adjustment Value	Speed/Feed (7xD)
200 SFM • 0.80	= 160 SFM
0.008 IPR • 0.80	= 0.0064 IPR

12xD and 15xD Adjustment Example (0.70 Adjustment)

Speed • Adjustment Value	Speed/Feed (12xD)
200 SFM • 0.70	= 140 SFM
0.008 IPR • 0.70	= 0.0056 IPR

Coolant Recommendations

Series	Stub, 3xD, 5xD: Pressure PSI	Stub, 3xD, 5xD: Flow Rate GPM	7xD, 10xD: Pressure PSI	7xD, 10xD: Flow Rate GPM	12xD, 15xD: Pressure PSI	12xD, 15xD: Flow Rate GPM
Y	450	4	550	6	650	8
Z	450	4	550	6	650	8
0	350	6	450	9	550	12
1	300	8	400	10	500	12
2	250	10	350	13	450	16
3	200	12	300	14	400	18

⚠ WARNING **Tool failure can cause serious injury. To prevent:**
- When using holders without support bushing, use a short T-A Pro holder to establish an initial hole that is a minimum of 2 diameters deep.
- Do not rotate tool holders more than 50 RPM unless it is engaged with the workpiece or fixture.

Visit **www.alliedmachine.com/DeepHoleGuidelines** for the most up-to-date information and procedures.
Factory technical assistance is available for your specific applications through our Application Engineering department. *ext:* **7611** | *email:* **appeng@alliedmachine.com**

IMPORTANT: The speeds and feeds listed above are a general starting point for all applications. Refer to the coolant recommendation chart for coolant requirements to run at the recommended speeds and feeds. Factory technical assistance is available through our Application Engineering department. For 7xD, 10xD, 12xD, and 15xD holder lengths, see adjustment example above.

Carbide Recommended Drilling Data | Metric (mm)

ISO	Material	Hardness (BHN)	Insert Grade	Speed (m/min)	Feed Rate (mm/rev) by Diameter: Y / Z Series (9.50 - 12.69)	0 Series (12.70 - 17.64)	1 Series (17.65 - 24.37)	2 Series (24.38 - 35.04)	3 Series (35.05 - 47.80)
P	**Free-Machining Steel** 1118, 1215, 12L14, etc.	100 - 150	P	145	0.18	0.25	0.33	0.41	0.51
		150 - 200	P	135	0.18	0.25	0.33	0.41	0.51
		200 - 250	P	125	0.15	0.25	0.33	0.41	0.51
	Low-Carbon Steel 1010, 1020, 1025, 1522, 1144, etc.	85 - 125	P	130	0.15❖	0.23	0.30	0.38	0.48
		125 - 175	P	125	0.15❖	0.23	0.30	0.38	0.48
		175 - 225	P	115	0.13❖	0.20	0.25	0.36	0.46
		225 - 275	P	110	0.13❖	0.20	0.25	0.36	0.46
	Medium-Carbon Steel 1030, 1040, 1050, 1527, 1140, 1151, etc.	125 - 175	P	125	0.15	0.23	0.30	0.38	0.48
		175 - 225	P	115	0.13	0.20	0.25	0.36	0.46
		225 - 275	P	110	0.13	0.20	0.25	0.36	0.46
		275 - 325	P	100	0.10	0.18	0.23	0.30	0.41
	Alloy Steel 4140, 5140, 8640, etc.	125 - 175	P	130	0.15	0.23	0.30	0.36	0.43
		175 - 225	P	120	0.13	0.20	0.28	0.36	0.43
		225 - 275	P	110	0.13	0.20	0.28	0.36	0.43
		275 - 325	P	105	0.10	0.18	0.25	0.30	0.38
		325 - 375	P	95	0.08	0.18	0.25	0.30	0.38
	High-Strength Alloy 4340, 4330V, 300M, etc.	225 - 300	P	105	0.10	0.18	0.25	0.33	0.38
		300 - 350	P	100	0.08	0.15	0.23	0.30	0.36
		350 - 400	P	90	0.08	0.15	0.20	0.28	0.33
	Structural Steel A36, A285, A516, etc.	100 - 150	P	120	0.15❖	0.25	0.30	0.36	0.46
		150 - 250	P	105	0.13❖	0.23	0.25	0.30	0.41
		250 - 350	P	85	0.10❖	0.20	0.23	0.25	0.36
	Tool Steel H-13, H-21, A-4, S-3, etc.	150 - 200	P	65	0.10	0.15	0.20	0.25	0.30
		200 - 250	P	55	0.10	0.15	0.20	0.25	0.30
S	**High-Temp Alloy** Hastelloy B, Inconel 600, etc.	140 - 220	M	35	0.05❖	0.13	0.18	0.20	0.23
		220 - 310	M	25	0.05❖	0.08	0.13	0.15	0.18
	Titanium Alloy	140 - 220	M	45	0.08❖	0.10	0.18	0.20	0.23
		220 - 310	M	35	0.08❖	0.08	0.13	0.15	0.18
	Aerospace Alloy S82	185 - 275	M	45	0.08❖	0.10	0.18	0.20	0.23
		275 - 350	M	35	0.08❖	0.08	0.13	0.15	0.18

❖ Contact our Application Engineering department for assistance when machining these materials.

7xD and 10xD Adjustment Example (0.80 Adjustment)

Data • Adjustment Value	Speed/Feed (7xD)
100 m/min • 0.80	= 80 m/min
0.2 mm/rev • 0.80	= 0.16 mm/rev

12xD and 15xD Adjustment Example (0.70 Adjustment)

Speed • Adjustment Value	Speed/Feed (12xD)
100 m/min • 0.70	= 70 m/min
0.2 mm/rev • 0.70	= 0.14 mm/rev

Coolant Recommendations

Series	Stub, 3xD, 5xD: Pressure BAR	Stub, 3xD, 5xD: Flow Rate LPM	7xD, 10xD: Pressure BAR	7xD, 10xD: Flow Rate LPM	12xD, 15xD: Pressure BAR	12xD, 15xD: Flow Rate LPM
Y	31	15	34	55	45	30
Z	31	15	34	22	45	30
0	24	22	31	34	34	45
1	21	30	27	38	34	45
2	17	38	24	49	31	60
3	14	45	21	53	27	68

⚠ WARNING **Tool failure can cause serious injury. To prevent:**
- When using holders without support bushing, use a short T-A Pro holder to establish an initial hole that is a minimum of 2 diameters deep.
- Do not rotate tool holders more than 50 RPM unless it is engaged with the workpiece or fixture.

Visit **www.alliedmachine.com/DeepHoleGuidelines** for the most up-to-date information and procedures.
Factory technical assistance is available for your specific applications through our Application Engineering department. *ext:* **7611** | *email:* **appeng@alliedmachine.com**

IMPORTANT: The speeds and feeds listed above are a general starting point for all applications. Refer to the coolant recommendation chart for coolant requirements to run at the recommended speeds and feeds. Factory technical assistance is available through our Application Engineering department. For 7xD, 10xD, 12xD, and 15xD holder lengths, see adjustment example above.

Carbide Recommended Drilling Data | Metric (mm)

ISO	Material	Hardness (BHN)	Insert Grade	Speed (m/min)	Feed Rate (mm/rev) by Diameter: Y / Z Series (9.50 - 12.69)	0 Series (12.70 - 17.64)	1 Series (17.65 - 24.37)	2 Series (24.38 - 35.04)	3 Series (35.05 - 47.80)
M	**Stainless Steel 400 Series**	185 - 275	M	85	0.13❖	0.23	0.25	0.30	0.33
	416, 420, etc.	275 - 350	M	70	0.10❖	0.20	0.23	0.28	0.30
	Stainless Steel 300 Series	135 - 185	M	85	0.08❖	0.10	0.13	0.20	0.28
	304, 316, 17-4PH, etc.	185 - 275	M	75	0.05❖	0.08	0.10	0.18	0.23
	Stainless Steel 300L Series	135 - 185	M	100	0.08❖	0.10	0.13	0.20	0.28
	304L, 316L, etc.	185 - 275	M	85	0.05❖	0.08	0.10	0.18	0.23
	PH Stainless	275 - 350	M	85	0.08❖	0.10	0.13	0.20	0.28
	17-4, 13-8, 15-5	350 - 425	M	75	0.05❖	0.08	0.10	0.18	0.23
	Super Duplex Stainless Steel	135 - 185	M	75	0.08❖	0.10	0.13	0.20	0.28
		185 - 275	M	70	0.05❖	0.08	0.10	0.18	0.23
H	**Wear Plate**	400	P	20	0.08	0.15	0.20	0.23	0.30
	Hardox®, AR400, T-1, etc.	500	P	15	0.05	0.13	0.18	0.20	0.25
		600	–	–	–	–	–	–	–
	Hardened Steel	300 - 400	P	30	0.08	0.15	0.20	0.23	0.30
		400 - 500	P	15	0.05	0.13	0.18	0.20	0.25
K	**SG / Nodular Cast Iron**	120 - 150	K	185	0.18	0.30	0.41	0.51	0.61
		150 - 200	K	170	0.15	0.28	0.36	0.46	0.56
		200 - 220	K	150	0.15	0.23	0.30	0.41	0.46
		220 - 260	K	135	0.13	0.18	0.23	0.30	0.36
		260 - 320	K	120	0.10	0.15	0.18	0.23	0.30
N	**Cast Aluminum**	30	N	335	0.20	0.33	0.41	0.51	0.56
		180	N	185	0.20	0.33	0.41	0.46	0.56
	Wrought Aluminum	30	N	335	0.23	0.33	0.43	0.51	0.61
		180	N	185	0.13	0.18	0.25	0.33	0.41
	Aluminum Bronze	100 - 200	N	150	0.15	0.28	0.36	0.46	0.56
		200 - 250	N	90	0.13	0.18	0.23	0.30	0.36
	Brass	100	N	200	0.18	0.30	0.41	0.51	0.61
	Copper	60	N	130	0.05	0.08	0.15	0.20	0.25

❖ Contact our Application Engineering department for assistance when machining these materials.

7xD and 10xD Adjustment Example (0.80 Adjustment)

Data • Adjustment Value	Speed/Feed (7xD)
100 m/min • 0.80	= 80 m/min
0.2 mm/rev • 0.80	= 0.16 mm/rev

12xD and 15xD Adjustment Example (0.70 Adjustment)

Speed • Adjustment Value	Speed/Feed (12xD)
100 m/min • 0.70	= 70 m/min
0.2 mm/rev • 0.70	= 0.14 mm/rev

Coolant Recommendations

Series	Stub, 3xD, 5xD: Pressure BAR	Stub, 3xD, 5xD: Flow Rate LPM	7xD, 10xD: Pressure BAR	7xD, 10xD: Flow Rate LPM	12xD, 15xD: Pressure BAR	12xD, 15xD: Flow Rate LPM
Y	31	15	34	55	45	30
Z	31	15	34	22	45	30
0	24	22	31	34	34	45
1	21	30	27	38	34	45
2	17	38	24	49	31	60
3	14	45	21	53	27	68

⚠ WARNING **Tool failure can cause serious injury. To prevent:**
- When using holders without support bushing, use a short T-A Pro holder to establish an initial hole that is a minimum of 2 diameters deep.
- Do not rotate tool holders more than 50 RPM unless it is engaged with the workpiece or fixture.

Visit **www.alliedmachine.com/DeepHoleGuidelines** for the most up-to-date information and procedures.
Factory technical assistance is available for your specific applications through our Application Engineering department. *ext:* **7611** | *email:* **appeng@alliedmachine.com**

IMPORTANT: The speeds and feeds listed above are a general starting point for all applications. Refer to the coolant recommendation chart for coolant requirements to run at the recommended speeds and feeds. Factory technical assistance is available through our Application Engineering department. For 7xD, 10xD, 12xD, and 15xD holder lengths, see adjustment example above.

High-Speed Steel Recommended Drilling Data | Metric (mm)

ISO	Material	Hardness (BHN)	Insert Grade	Speed (m/min)	Feed Rate (mm/rev) by Diameter: Y / Z Series (9.50 - 12.69)	0 Series (12.70 - 17.64)	1 Series (17.65 - 24.37)	2 Series (24.38 - 35.04)	3 Series (35.05 - 47.80)
P	**Free-Machining Steel** 1118, 1215, 12L14, etc.	100 - 150	X	105	0.15	0.25	0.33	0.41	0.51
		150 - 200	X	100	0.15	0.25	0.33	0.41	0.51
		200 - 250	X	90	0.13	0.25	0.33	0.41	0.51
	Low-Carbon Steel 1010, 1020, 1025, 1522, 1144, etc.	85 - 125	X	95	0.15❖	0.23	0.30	0.38	0.48
		125 - 175	X	90	0.13❖	0.23	0.30	0.38	0.48
		175 - 225	X	85	0.13❖	0.20	0.25	0.36	0.46
		225 - 275	X	80	0.13❖	0.20	0.25	0.36	0.46
	Medium-Carbon Steel 1030, 1040, 1050, 1527, 1140, 1151, etc.	125 - 175	X	90	0.15	0.23	0.30	0.38	0.48
		175 - 225	X	85	0.13	0.20	0.25	0.36	0.46
		225 - 275	X	80	0.13	0.20	0.25	0.36	0.46
		275 - 325	X	70	0.10	0.18	0.23	0.30	0.41
	Alloy Steel 4140, 5140, 8640, etc.	125 - 175	X	75	0.15	0.23	0.30	0.36	0.43
		175 - 225	X	70	0.13	0.20	0.28	0.36	0.43
		225 - 275	X	65	0.13	0.20	0.28	0.36	0.43
		275 - 325	X	60	0.10	0.18	0.25	0.30	0.38
		325 - 375	X	60	0.08	0.18	0.25	0.30	0.38
	High-Strength Alloy 4340, 4330V, 300M, etc.	225 - 300	X	40	0.10	0.18	0.25	0.33	0.38
		300 - 350	X	35	0.08	0.15	0.23	0.30	0.36
		350 - 400	X	25	0.08	0.15	0.20	0.28	0.33
	Structural Steel A36, A285, A516, etc.	100 - 150	X	75	0.15❖	0.25	0.30	0.36	0.46
		150 - 250	X	65	0.13❖	0.23	0.25	0.30	0.41
		250 - 350	X	55	0.10❖	0.20	0.23	0.25	0.36
	Tool Steel H-13, H-21, A-4, S-3, etc.	150 - 200	X	45	0.10	0.15	0.20	0.25	0.30
		200 - 250	X	35	0.10	0.15	0.20	0.25	0.30
S	**High-Temp Alloy** Hastelloy B, Inconel 600, etc.	140 - 220	X	15	0.08❖	0.18	0.20	0.25	0.30
		220 - 310	X	10	0.08❖	0.15	0.18	0.20	0.25
	Titanium Alloy	140 - 220	X	20	0.08	0.18	0.20	0.25	0.30
		220 - 310	X	15	0.08	0.15	0.18	0.20	0.25
	Aerospace Alloy S82	185 - 275	X	40	0.13	0.20	0.23	0.25	0.36
		275 - 350	X	35	0.10	0.18	0.20	0.20	0.30

❖ Contact our Application Engineering department for assistance when machining these materials.

7xD and 10xD Adjustment Example (0.80 Adjustment)

Data • Adjustment Value	Speed/Feed (7xD)
100 m/min • 0.80	= 80 m/min
0.2 mm/rev • 0.80	= 0.16 mm/rev

12xD and 15xD Adjustment Example (0.70 Adjustment)

Speed • Adjustment Value	Speed/Feed (12xD)
100 m/min • 0.70	= 70 m/min
0.2 mm/rev • 0.70	= 0.14 mm/rev

Coolant Recommendations

Series	Stub, 3xD, 5xD: Pressure BAR	Stub, 3xD, 5xD: Flow Rate LPM	7xD, 10xD: Pressure BAR	7xD, 10xD: Flow Rate LPM	12xD, 15xD: Pressure BAR	12xD, 15xD: Flow Rate LPM
Y	31	15	34	55	45	30
Z	31	15	34	22	45	30
0	24	22	31	34	34	45
1	21	30	27	38	34	45
2	17	38	24	49	31	60
3	14	45	21	53	27	68

⚠ WARNING **Tool failure can cause serious injury. To prevent:**
- When using holders without support bushing, use a short T-A Pro holder to establish an initial hole that is a minimum of 2 diameters deep.
- Do not rotate tool holders more than 50 RPM unless it is engaged with the workpiece or fixture.

Visit **www.alliedmachine.com/DeepHoleGuidelines** for the most up-to-date information and procedures.
Factory technical assistance is available for your specific applications through our Application Engineering department. *ext:* **7611** | *email:* **appeng@alliedmachine.com**

IMPORTANT: The speeds and feeds listed above are a general starting point for all applications. Refer to the coolant recommendation chart for coolant requirements to run at the recommended speeds and feeds. Factory technical assistance is available through our Application Engineering department. For 7xD, 10xD, 12xD, and 15xD holder lengths, see adjustment example above.

High-Speed Steel Recommended Drilling Data | Metric (mm)

ISO	Material	Hardness (BHN)	Insert Grade	Speed (m/min)	Feed Rate (mm/rev) by Diameter: Y / Z Series (9.50 - 12.69)	0 Series (12.70 - 17.64)	1 Series (17.65 - 24.37)	2 Series (24.38 - 35.04)	3 Series (35.05 - 47.80)
M	**Stainless Steel 400 Series**	185 - 275	X	40	0.13❖	0.25	0.28	0.30	0.33
	416, 420, etc.	275 - 350	X	35	0.10❖	0.23	0.25	0.28	0.30
	Stainless Steel 300 Series	135 - 185	X	40	0.13❖	0.18	0.20	0.23	0.30
	304, 316, 17-4PH, etc.	185 - 275	X	35	0.10❖	0.15	0.18	0.20	0.28
	PH Stainless	275 - 350	X	30	0.08❖	0.10	0.15	0.20	0.25
	17-4, 13-8, 15-5	350 - 425	X	25	0.08❖	0.10	0.15	0.20	0.25
	Super Duplex Stainless Steel	135 - 185	X	40	0.13❖	0.13	0.15	0.15	0.18
		185 - 275	X	35	0.10❖	0.13	0.13	0.15	0.15
H	**Wear Plate**	400	X	20	0.08	0.15	0.20	0.23	0.30
	Hardox®, AR400, T-1, etc.	500	X	15	0.05	0.13	0.18	0.20	0.25
		600	–	–	–	–	–	–	–
	Hardened Steel	300 - 400	X	25	0.08	0.15	0.20	0.23	0.30
		400 - 500	X	15	0.05	0.13	0.18	0.20	0.25
K	**SG / Nodular Cast Iron**	120 - 150	X	90	0.18	0.30	0.41	0.51	0.61
		150 - 200	X	85	0.15	0.28	0.36	0.46	0.56
		200 - 220	X	75	0.15	0.23	0.30	0.41	0.46
		220 - 260	X	65	0.13	0.18	0.23	0.30	0.36
		260 - 320	X	55	0.10	0.15	0.18	0.23	0.30
N	**Cast Aluminum**	30	X	185	0.20	0.33	0.41	0.51	0.56
		180	X	90	0.20	0.33	0.41	0.46	0.56
	Wrought Aluminum	30	X	275	0.23	0.33	0.43	0.51	0.61
		180	X	185	0.13	0.18	0.25	0.33	0.41
	Aluminum Bronze	100 - 200	X	90	0.15	0.28	0.36	0.46	0.56
		200 - 250	X	75	0.13	0.18	0.23	0.30	0.36
	Brass	100	X	150	0.18	0.30	0.41	0.51	0.61
	Copper	60	X	100	0.05	0.08	0.15	0.20	0.25

❖ Contact our Application Engineering department for assistance when machining these materials.

7xD and 10xD Adjustment Example (0.80 Adjustment)

Data • Adjustment Value	Speed/Feed (7xD)
100 m/min • 0.80	= 80 m/min
0.2 mm/rev • 0.80	= 0.16 mm/rev

12xD and 15xD Adjustment Example (0.70 Adjustment)

Speed • Adjustment Value	Speed/Feed (12xD)
100 m/min • 0.70	= 70 m/min
0.2 mm/rev • 0.70	= 0.14 mm/rev

Coolant Recommendations

Series	Stub, 3xD, 5xD: Pressure BAR	Stub, 3xD, 5xD: Flow Rate LPM	7xD, 10xD: Pressure BAR	7xD, 10xD: Flow Rate LPM	12xD, 15xD: Pressure BAR	12xD, 15xD: Flow Rate LPM
Y	31	15	34	55	45	30
Z	31	15	34	22	45	30
0	24	22	31	34	34	45
1	21	30	27	38	34	45
2	17	38	24	49	31	60
3	14	45	21	53	27	68

⚠ WARNING **Tool failure can cause serious injury. To prevent:**
- When using holders without support bushing, use a short T-A Pro holder to establish an initial hole that is a minimum of 2 diameters deep.
- Do not rotate tool holders more than 50 RPM unless it is engaged with the workpiece or fixture.

Visit **www.alliedmachine.com/DeepHoleGuidelines** for the most up-to-date information and procedures.
Factory technical assistance is available for your specific applications through our Application Engineering department. *ext:* **7611** | *email:* **appeng@alliedmachine.com**

IMPORTANT: The speeds and feeds listed above are a general starting point for all applications. Refer to the coolant recommendation chart for coolant requirements to run at the recommended speeds and feeds. Factory technical assistance is available through our Application Engineering department. For 7xD, 10xD, 12xD, and 15xD holder lengths, see adjustment example above.

Tap Drill Information and Formulas | Imperial (inch)

American - Unified Inch Screw Thread

Tap Size	Tap Drill Size	Decimal Equivalent	* Theo % Thread	Probable Mean Oversize	Probable Hole Size	** Probable % Thread
1/2 - 20	29/64	0.4531	72%	0.003	0.4561	68%
9/16 - 12	12.0 mm	0.4724	72%	0.003	0.4754	69%
	31/64	0.4844	83%	0.003	0.4874	80%
9/16 - 18	1/2	0.5000	87%	0.003	0.5030	82%
	13.0 mm	0.5118	70%	0.003	0.5148	66%
	31/64	0.5156	65%	0.003	0.5186	61%
5/8 - 11	17/32	0.5313	79%	0.003	0.5343	77%
5/8 - 12	35/64	0.5469	72%	0.003	0.5499	69%
5/8 - 18	9/16	0.5625	87%	0.003	0.5655	82%
	14.5 mm	0.5709	75%	0.003	0.5739	71%
	37/64	0.5781	65%	0.003	0.5811	61%
11/16 - 12	39/64	0.6094	72%	0.003	0.6124	69%
3/4 - 10	41/64	0.6406	84%	0.003	0.6436	82%
	16.5 mm	0.6496	77%	0.003	0.6526	75%
	21/32	0.6563	72%	0.003	0.6593	70%
3/4 - 12	43/64	0.6719	72%	0.003	0.6749	69%
3/4 - 16	11/16	0.6875	77%	0.003	0.6905	73%
	17.5 mm	0.6890	75%	0.003	0.6920	71%
7/8 - 9	49/64	0.7656	76%	0.003	0.7686	74%
	25/32	0.7813	65%	0.003	0.7843	63%
7/8 - 14	51/64	0.7969	84%	0.003	0.7999	81%
	13/16	0.8125	67%	0.003	0.8155	64%
15/16 - 12	55/64	0.8594	72%	0.003	0.8624	69%
15/16 - 20	57/64	0.8906	72%	0.003	0.8936	68%
1 - 8	22.0 mm	0.8661	82%	0.003	0.8691	81%
	7/8	0.8750	77%	0.003	0.8780	75%
	57/64	0.8906	67%	0.003	0.8936	65%
1 - 12	29/32	0.9063	87%	0.003	0.9093	84%
	59/64	0.9219	72%	0.003	0.9249	69%
1 - 14	15/16	0.9375	67%	0.003	0.9405	64%
1-1/8 - 12	1-1/32	1.0313	87%	0.003	1.0343	84%
	1-3/64	1.0469	72%	0.003	1.0499	69%
1-1/4 - 7	1-7/64	1.1094	76%	0.003	1.1124	74%

Formulas

1. **RPM = (3.82 • SFM) / DIA**
   where:
   RPM = revolutions per minute (rev/min)
   SFM = speed (ft/min)
   DIA = diameter of drill (inch)

2. **IPM = RPM • IPR**
   where:
   IPM = inches per minute (in/min)
   RPM = revolutions per minute (rev/min)
   IPR = feed rate (in/rev)

3. **SFM = RPM • 0.262 • DIA**
   where:
   SFM = speed (ft/min)
   RPM = revolutions per minute (rev/min)
   DIA = diameter of drill (inch)

4. **Thrust = 153,700 • IPR • DIA • K_m**
   where:
   Thrust = axial thrust (lbs)
   IPR = feed rate (in/rev)
   DIA = diameter of drill (inch)
   K_m = specific cutting energy (lbs/in^2)

5. **Tool Power = .6991 • IPR • RPM • K_m • DIA^2**
   where:
   Tool Power = tool power (HP)
   IPR = feed rate (in/rev)
   RPM = revolutions per minute (rev/min)
   K_m = specific cutting energy (lbs/in^2)
   DIA = diameter of drill (inch)

Taper Pipe Thread (NPT)

Tap Size	Tap Drill Size	Decimal Equivalent	* Theo % Thread	Probable Mean Oversize	Probable Hole Size	** Probable % Thread
1/4 - 18	7/16	0.4375	–	0.003	0.4405	–
3/8 - 18	9/16	0.5625	–	0.003	0.5655	–
1/2 - 14	45/64	0.7031	–	0.003	0.7061	–
3/4 - 14	29/32	0.9063	–	0.003	0.9093	–

*Based on nominal tap drill diameter.
**Based on 0.003" probable mean oversize.

To calculate the percent of full thread for a given hole diameter:

$$\text{\% Thread} = \text{\# of threads per inch} \bullet \frac{\text{(Basic major diameter of thread - Drill hole size)}}{.0130}$$

Material Constants

Type of Material	Hardness	K_m (lbs/in^2)
Plain Carbon and Alloy Steel	85 - 200 BHN	0.79
	200 - 275 BHN	0.94
	275 - 375 BHN	1.00
	375 - 425 BHN	1.15
High-Temperature Alloys	–	1.44
Titanium Alloy	–	0.72
Stainless Steels	135 - 275 BHN	0.94
	30 - 45 RC	1.08
Cast Iron	100 - 200 BHN	0.50
	200 - 300 BHN	1.08
Copper Alloy	20 - 80 RB	0.43
	80 - 100 RB	0.72
Aluminum Alloy	–	0.22
Magnesium Alloy	–	0.16

Notes

- The above tap drill information represents probable thread percentages for the standard tap drills stocked at Allied Machine. Special insert diameters may be required in order to meet a user specific percentage of thread requirement.
- The 0.003" probable mean oversize hole condition is based on optimum cutting conditions. Probable percent of full thread may vary based on less ideal cutting conditions.
- The table and equations on this page are found in the *Machinery's Handbook*. Permission to simplify and print the equations is granted by the editor of the *Machinery's Handbook*.

Tap Drill Information and Formulas | Metric (mm)

Tap Size	Tap Drill Size	Decimal Equivalent (inch)	* Theo % Thread	Probable Mean Oversize	Probable Hole Size	** Probable % Thread
12 X 1.25	27/64	0.4219	79%	0.075 mm	10.79 mm	74%
	10.8 mm	0.4252	74%	0.075 mm	10.88 mm	69%
14 X 2.0	15/32	0.4688	81%	0.075 mm	11.98 mm	78%
	12.0 mm	0.4724	77%	0.075 mm	12.08 mm	74%
14 X 1.5	12.5 mm	0.4921	77%	0.075 mm	12.58 mm	73%
16 X 2.0	14.0 mm	0.5512	77%	0.075 mm	14.08 mm	74%
16 X 1.5	14.5 mm	0.5709	77%	0.075 mm	14.58 mm	73%
	37/64	0.5781	68%	0.075 mm	14.76 mm	64%
18 X 2.5	15.5 mm	0.6102	77%	0.075 mm	15.58 mm	75%
18 X 1.5	16.5 mm	0.6496	77%	0.075 mm	16.58 mm	73%
	21/32	0.6563	68%	0.075 mm	16.75 mm	64%
20 X 2.5	11/16	0.6875	78%	0.075 mm	17.54 mm	76%
	17.5 mm	0.6890	77%	0.075 mm	17.58 mm	74%
20 X 1.5	18.5 mm	0.7283	77%	0.075 mm	18.58 mm	73%
	47/64	0.7344	69%	0.075 mm	18.66 mm	65%
22 X 2.5	49/64	0.7656	79%	0.075 mm	19.52 mm	76%
	19.5 mm	0.7677	77%	0.075 mm	19.58 mm	75%
22 X 1.5	20.5 mm	0.8071	77%	0.075 mm	20.58 mm	73%
	13/16	0.8125	70%	0.075 mm	20.71 mm	66%
24 X 3	13/16	0.8125	86%	0.075 mm	20.71 mm	84%
	21.0 mm	0.8268	76%	0.075 mm	21.08 mm	75%
24 X 2	22.0 mm	0.8661	77%	0.075 mm	22.08 mm	74%
	7/8	0.8750	68%	0.075 mm	22.30 mm	65%
27 X 3	24.0 mm	0.9449	77%	0.075 mm	24.08 mm	75%

Formulas

1. **RPM = (318.47 • m/min) / DIA**
   where:
   RPM = revolutions per minute (rev/min)
   m/min = speed (m/min)
   DIA = diameter of drill (mm)

2. **mm/min = RPM • mm/rev**
   where:
   mm/min = mm per minute (mm/min)
   RPM = revolutions per minute (rev/min)
   mm/rev = feed rate (mm/rev)

3. **m/min = RPM • 0.003 • DIA**
   where:
   m/min = speed (m/min)
   RPM = revolutions per minute (rev/min)
   DIA = diameter of drill (mm)

4. **Thrust = 154 • (mm/rev) • DIA • K_m**
   where:
   Thrust = axial thrust (N)
   mm/rev = feed rate (mm/rev)
   DIA = diameter of drill (mm)
   K_m = specific cutting energy (kPa)

5. **Tool Power = ((mm/rev) • RPM • K_m • DIA^2) / 218604.8**
   where:
   Tool Power = tool power (HP)
   mm/rev = feed rate (mm/rev)
   RPM = revolutions per minute (rev/min)
   K_m = specific cutting energy (kPa)
   DIA = diameter of drill (mm)

BSP and ISO 7-1

Tap Size	Tap Drill Size	Decimal Equivalent	* Theo % Thread	Probable Mean Oversize	Probable Hole Size	** Probable % Thread
1/4-19	7/16	0.4375	–	0.075mm	11.19 mm	–
3/8-19	37/64	0.5781	–	0.075mm	14.76 mm	–
1/2-14	23/32	0.7188	–	0.075mm	18.33 mm	–
3/4-14	15/16	0.9375	–	0.075mm	23.89 mm	–

*Based on nominal tap drill diameter.
**Based on 0.075 mm probable mean oversize.

To calculate the percent of full thread for a given hole diameter:

$$\% \text{ Thread} = \frac{76.93}{\text{Pitch (mm)}} \cdot (\text{Basic major diameter - Drill hole size})$$

Material Constants

Type of Material	Hardness	K_m (kPa)
Plain Carbon and Alloy Steel	85 - 200 BHN	5.45
	200 - 275 BHN	6.48
	275 - 375 BHN	6.89
	375 - 425 BHN	7.93
High-Temperature Alloys	–	9.93
Titanium Alloy	–	4.96
Stainless Steels	135 - 275 BHN	6.48
	30 - 45 RC	7.45
Cast Iron	100 - 200 BHN	3.45
	200 - 300 BHN	7.45
Copper Alloy	20 - 80 RB	2.96
	80 - 100 RB	4.96
Aluminum Alloy	–	1.52
Magnesium Alloy	–	1.10

Notes

- The above tap drill information represents probable thread percentages for the standard tap drills stocked at Allied Machine. Special insert diameters may be required in order to meet a user specific percentage of thread requirement.
- The 0.075 mm probable mean oversize hole condition is based on optimum cutting conditions. Probable percent of full thread may vary based on less ideal cutting conditions.
- The table and equations on this page are found in the *Machinery's Handbook*. Permission to simplify and print the equations is granted by the editor of the *Machinery's Handbook*.

Deep Hole Drilling Guidelines

T-A Pro | 10xD, 12xD, and 15xD Holders

1. Pilot Hole
100 % RPM
100% IPR (mm/rev)

Establish the pilot hole using the same diameter short drill to a depth of 2xD minimum.
Utilize a pilot drill with the same or larger included point angle.

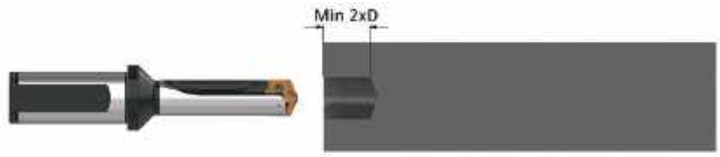

Coolant ON

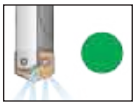

2. Feed-in
50 RPM max
12 IPM (300 mm/min)

Feed the longer drill within 1/16" (1.5 mm) short of the established pilot hole bottom at a **maximum of 50 RPM** and 12 IPM (300 mm/min) feed rate.

Coolant OFF

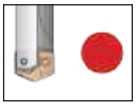

3. Deep Hole Transition Drilling
50 % RPM
75% IPR (mm/rev)

Drill additional 1xD past the bottom of the pilot hole at 50% reduction of recommended speed and 25% reduction of recommended feed.
Minimum of one second dwell is required to meet full speed before feeding.

Coolant ON

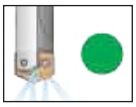

4. Deep Hole Drilling - Blind
100% RPM
100% IPR (mm/rev)

Drill to full depth at recommended speed and feed for longer drill according to Allied speed and feed charts.
No peck cycle recommended.

Coolant ON

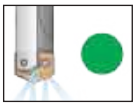

5. Deep Hole Drilling - at Breakout
50% RPM
75% IPR (mm/rev)

For through holes only:
Reduce speed by 50% and feed by 25% prior to breakout.
Do not break out more than 1/8" (3 mm) past the full diameter of the drill.

Coolant ON

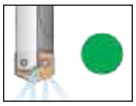

6. Drill Retract
50 RPM max

Reduce speed to a **maximum of 50 RPM** before retracting from the hole.

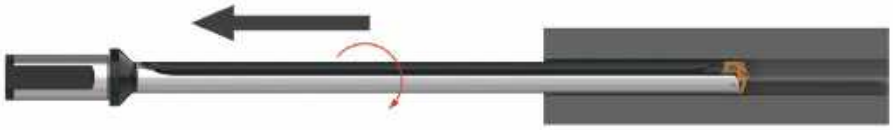

Coolant OFF

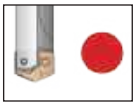

⚠ WARNING **Tool failure can cause serious injury. To prevent:**
- When using holders without support bushing, use a short T-A Pro holder to establish an initial hole that is a minimum of 2 diameters deep.
- Do not rotate tool holders more than 50 RPM unless it is engaged with the workpiece or fixture.

Visit **www.alliedmachine.com/DeepHoleGuidelines** for the most up-to-date information and procedures.
Factory technical assistance is available for your specific applications through our Application Engineering department. *ext:* **7611** | *email:* **appeng@alliedmachine.com**

Troubleshooting Guide

	Potential Problem																		
	Accelerated corner wear	Barber pole	Bell-mouth hole	Insert chipping	Blue chips	Built-Up Edge (BUE)	Chatter	Chip packing	Chipping of point	Damaged or broken tools	Excessive margin wear	High flank wear	Hole lead off	Hole out of position	Hole out of round	Oversize hole	Poor hole finish	Poor tool life	Power spikes - Load meter
Setup Condition	1	2	3	4	5	6	7	8	9	10	11	12	13	14	15	16	17	18	19
Worn or misaligned spindle (lathe, screw machine, chucker)	1	2	3				7		9	10	11		13			16	17		
Use of low rigidity machine tools		2	3	4			7		9	10			13	14					
Poor workpiece support		2		4			7			10	11				15		17		
Flood coolant, low coolant pressure, or low coolant volume	1				5	6		8		10		12				16	17	18	19
Interrupted cuts. Entry or exit surfaces that are not perpendicular to the spindle (draft angles, parting lines, curved or stepped surfaces, cross holes, and cast or forged surfaces)				4			7		9	10	11		13	14	15	16	17	18	
Material harder than expected or running tools beyond recommended speed	1				5	6				10		12						18	
Poor material micro-structure or foreign particles (forgings and castings that have not been normalized or annealed, poorly prepared steel, flame cut parts, and sand casting)				4		6				10		12	13					18	
Poor chip control								8		10	11		13			16	17	18	19
Spot drilled holes with included angle less than that matching T-A Pro or cored holes	1			4			7						13					18	

Setup Condition	Possible Solutions
Worn or misaligned spindle (lathe, screw machine, chucker)	• Align spindle and turret or tailstock. • Repair spindle.
Use of low rigidity machine tools	• Reduce penetration rate to fall within the physical limits of the machine or setup (**NOTICE:** Do not reduce feed below threshold of good chip formation).
Poor workpiece support	• Provide additional support for the workpiece. • Reduce penetration rate to fall within the physical limits of the machine or setup (**NOTICE:** Do not reduce feed below threshold of good chip formation).
Flood coolant, low coolant pressure, or low coolant volume	• Run coolant through tool holder when drilling greater than 1xD. • Increase coolant pressure and volume through the tool holder. • Reduce penetration rate to fall within the coolant limitations (**NOTICE:** Do not reduce feed below threshold of good chip formation). • Add a peck cycle to help clear chips.
Interrupted cuts. Entry or exit surfaces that are not perpendicular to the spindle (draft angles, parting lines, curved or stepped surfaces, cross holes, and cast or forged surfaces)	• Pre-mill (spot face) entry or exit surface to remove interruption. • Decrease feed as much as 50% through entry or exit interruption. • Use short holders in low impact entry cuts.
Material harder than expected or running tools beyond recommended speed	• Reduce speed. • Increase coolant pressure and volume. • Improve coolant condition by use of quality products and regular maintenance.
Poor material micro-structure or foreign particles (forgings and castings that have not been normalized or annealed, poorly prepared steel, flame cut parts, and sand casting)	• Compare performance of other tools for similar wear problems, which may indicate poor micro-structure. Anneal or normalize parts to improve micro-structure for machining. • Reduce feeds (**NOTICE:** Do not reduce feed below threshold of good chip formation).
Poor chip control	• Increase feed to recommended levels. Contact Allied's Application Engineering group for technical recommendations. • Increase coolant pressure and volume. • Improve coolant condition by use of quality products and regular maintenance.
Spot drilled holes with included angle less than that matching T-A Pro or cored holes	• Spot hole with short tool of same or greater included angle as T-A Pro drill insert. • Reduce feed (**NOTICE:** Do not reduce feed below threshold of good chip formation). If possible, drill from solid.

SECTION

A30

T-A® Drilling System

T-A® Drilling System

Replaceable Insert Drilling System | GEN2 T-A® | T-A®

- **Diameter Range:** 0.374" - 4.507" (9.50 mm - 114.48 mm)

This is Not Yesterday's Spade Drill

The T-A drilling system is an innovation inspired by the Universal replaceable spade insert drilling system. However, with the development of the GEN2 T-A insert, along with the countless geometry options for the T-A, this drilling system provides benefits and performance that spade blade inserts of the past never could.

With constant innovations in holder designs, insert geometries and coatings, and coolant dispersion, the T-A drilling system continues to evolve and become much more productive and powerful than ever before.

Excellent hole size and finish.	Optimizes chip evacuation.	Wide range of geometry options available.

Applicable Industries

Aerospace | Agriculture | Automotive | Firearms | General Machining | Oil & Gas | Renewable Energy

Your safety and the safety of others is very important. This catalog contains important safety messages. Always read and follow all safety precautions.

This triangle is a safety hazard symbol. It alerts you to potential safety hazards that can cause tool failure and serious injury.

When you see this symbol in the catalog, look for a related safety message that may be near this triangle or referred to in the nearby text.

There are safety signal words also used in the catalog. Safety messages follow these words.

WARNING

WARNING (shown above) means that failure to follow the precautions in this message could result in tool failure and serious injury.

NOTICE means that failure to follow the precautions in this message could result in damage to the tool or machine but not result in personal injury.

NOTE and **IMPORTANT** are also used. These are important that you read and follow but are not safety-related.

Visit www.alliedmachine.com for the most up-to-date information and procedures.

Reference Icons
The following icons will appear throughout the catalog to help you navigate between products.

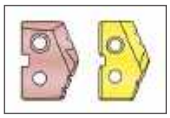

T-A Inserts
Refers to the range of inserts that connect with the corresponding holders

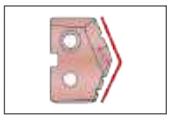

Available Insert Geometries
Details for the different geometry options available for each T-A insert style

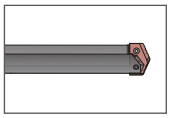

T-A Holders
Refers to the range of holders that connect with the corresponding inserts

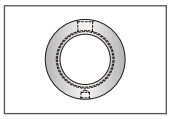

Rotary Coolant Adapter (RCA) Information
Detailed instructions and information regarding the corresponding part(s)

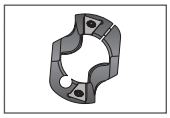

T-ACR 45 Chamfer Rings
Refers to the range of T-ACR 45 chamfer rings available for the corresponding holders

Technical Information
Detailed instructions and information regarding the corresponding part(s)

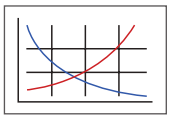

Recommended Cutting Data
Speed and feed recommendations for optimum and safe drilling

Coolant-Through Option
Indicates that the product is coolant through

Series	Diameter Range	
	Imperial (inch)	Metric (mm)
Y	0.374 - 0.436	9.50 - 11.07
Z	0.437 - 0.510	11.10 - 12.95
0	0.511 - 0.695	12.98 - 17.65
1	0.690 - 0.960	17.53 - 24.38
2	0.961 - 1.380	24.41 - 35.05
3	1.353 - 1.882	34.36 - 47.80
4	1.850 - 2.570	46.99 - 65.28
5	2.456 - 3.000	62.38 - 76.20
6	3.001 - 3.507	76.22 - 89.08
7	3.508 - 4.000	89.10 - 101.60
8	4.001 - 4.507	101.63 - 114.48

T-A® Drilling System Contents

Introduction Information

T-A Inserts Overview . . . . . 2 - 3
T-A Insert Geometries . . . . . 4 - 6
T-A Holders Overview 7
Technical Information . . . . . 8 - 9
Product Nomenclature . . . . . 10 - 11

T-A Drill Series

Y Series . . . . . 12 - 21
Z Series . . . . . 22 - 31
0 Series . . . . . 32 - 43
1 Series . . . . . 44 - 57
2 Series . . . . . 58 - 73
3 Series . . . . . 74 - 85
4 Series . . . . . 86 - 93
5 and 6 Series . . . . . 94 - 101
7 and 8 Series . . . . . 102 - 109

T-A Drill Adapters

Rotary Coolant Adapters (RCA) 110
T-ACR 45 Chamfer Rings 111

Recommended Cutting Data

Imperial (inch)
- GEN2 T-A® . . . . . 112 - 115
- T-A . . . . . 116 - 119
- Flat Bottom Geometry . . . . . 120 - 123
- Diamond Coating 124
- Tap Drill Information 125
- Coolant Recommendations . . . . . 126 - 127

Metric (mm)
- GEN2 T-A . . . . . 128 - 131
- T-A . . . . . 132 - 135
- Flat Bottom Geometry . . . . . 136 - 139
- Diamond Coating 140
- Tap Drill Information 141
- Coolant Recommendations . . . . . 142 - 143

Troubleshooting Guide . . . . . 144 - 145

Deep Hole Drilling Guidelines 146

T-A Drilling System Overview | Drill Inserts

Series	Y Series	Z Series	0 Series	1 Series	2 Series	3 Series	4 Series
GEN2 T-A®							
D_1 inch	0.374 - 0.436	0.437 - 0.510	0.511 - 0.695	0.690 - 0.960	0.961 - 1.380	1.353 - 1.882	1.850 - 2.570
D_1 mm	9.50 - 11.07	11.10 - 12.95	12.98 - 17.65	17.53 - 24.38	24.41 - 35.05	34.36 - 47.80	46.99 - 65.28
Half Series Option*	✗	✗	✓	✓	✓	✗	✗
HSS Substrates	Super Cobalt	Super Cobalt	Super Cobalt	Super Cobalt	Super Cobalt	HSS Super Cobalt Premium Cobalt	HSS Super Cobalt
Carbide Substrates	C1 (K35) C2 (K20)	C1 (K35) C2 (K20)	C1 (K35) C2 (K20)	C1 (K35) C2 (K20)	C1 (K35) C2 (K20)	–	–
Coatings	AM200® AM300®	AM200® AM300®	AM200® AM300®	AM200® AM300®	AM200® AM300®	AM200® TiN	AM200® TiN

*See page A30: 7 for more information regarding half series options

Series	Y Series	Z Series	0 Series	1 Series	2 Series	3 Series	4 Series
T-A®							
D_1 inch	0.374 - 0.436	0.437 - 0.510	0.511 - 0.695	0.690 - 0.960	0.961 - 1.380	1.353 - 1.882	1.850 - 2.570
D_1 mm	9.50 - 11.07	11.10 - 12.95	12.98 - 17.65	17.53 - 24.38	24.41 - 35.05	34.36 - 47.80	46.99 - 65.28
Half Series Option*	✗	✗	✓	✓	✓	✗	✗
HSS Substrates	Super Cobalt Premium Cobalt	Super Cobalt Premium Cobalt	Super Cobalt Premium Cobalt	HSS Super Cobalt Premium Cobalt	HSS Super Cobalt Premium Cobalt	Super Cobalt	Super Cobalt
Carbide Substrates	C2 (K20) C3 (K10) C5 (P40) N2	C2 (K20) C3 (K10) C5 (P40) N2	C2 (K20) C3 (K10) C5 (P40) N2	C2 (K20) C3 (K10) C5 (P40) N2	C2 (K20) C3 (K10) C5 (P40) N2	C2 (K20) C5 (P40)	–
Coatings	TiN TiAlN TiCN	TiN TiAlN TiCN	TiN TiAlN TiCN	TiN TiAlN TiCN	TiN TiAlN TiCN	TiN	TiN

*See page A30: 7 for more information regarding half series options

Drill Insert Coatings

AM300®

- Increased heat resistance over AM200® coating
- Up to 20% increased tool life over AM200 coating
- Provides superior tool life at high penetration rates
- Color: copper/orange

AM200®

- First choice for increased heat resistance over TiN, TiCN, and TiALN with improved wear capabilities
- Allows for improved tool life and higher penetration rates
- Over 20% increase in tool life compared to TiAlN coating
- Color: copper/bronze

TiN

- General purpose coating
- Improved tool life over non-coated inserts
- Excellent choice for aluminum
- Color: gold/yellow

TiAlN

- Excellent choice for wear resistance over high surface speeds
- Excellent oxidation resistance
- Maximum working temperature 800°C
- Color: violet/grey

TiCN

- Excellent choice for wear resistance over low surface speeds
- High hardness/wear resistance
- Maximum working temperature 400°C
- Color: blue/grey

5 Series	6 Series	7 Series	8 Series
2.456 - 3.000	3.001 - 3.507	3.508 - 4.000	4.001 - 4.507
62.38 - 76.20	76.22 - 89.08	89.10 - 101.60	101.63 - 114.48
✖	✖	✖	✖
HSS Super Cobalt	HSS Super Cobalt	HSS Super Cobalt	HSS Super Cobalt
–	–	–	–
AM200® TiN	AM200® TiN	AM200® TiN	AM200® TiN

5 Series	6 Series	7 Series	8 Series
2.456 - 3.000	3.001 - 3.507	3.508 - 4.000	4.001 - 4.507
62.38 - 76.20	76.22 - 89.08	89.10 - 101.60	101.63 - 114.48
✖	✖	✖	✖
HSS Super Cobalt	HSS Super Cobalt	HSS Super Cobalt	HSS Super Cobalt
–	–	–	–
TiN	TiN	TiN	TiN

Drill Insert Grades			
HSS (T-A® / GEN2 T-A®) First choice for general purpose use. Suited for difficult machining applications with low rigidity, as well as deep hole drilling. Recommended for drilling most steels, cast irons, and aluminum alloys up to 275 BHN.	**HSS Super Cobalt** (T-A® / GEN2 T-A®) Suited for good-to-rigid machining applications, used for drilling exotic and high-alloy materials, or general use when surface speed needs to be increased. For use in material hardness up to 350 BHN.	**HSS Premium Cobalt** (T-A® / GEN2 T-A®) Suited for rigid machining applications, used for drilling exotic and high-alloy materials, or general use when surface speed needs to be increased. For material hardness up to 400 BHN.	**Carbide C5 (P40)** (T-A®) Excellent for drilling free-machining steel, low/medium-carbon steels, alloy steels, high-strength steels, tool steels, and hardened steels.
Carbide C3 (K10) (T-A®) Designed for drilling grey/white cast irons. The special geometry offers substantial increase in penetration rates and provides exceptional edge strength and tool life.	**Carbide C2 (K20)** (T-A® / GEN2 T-A®) Excellent for drilling high-temperature alloys, titanium alloys, cast aluminum, SG/nodular cast iron, grey/white iron, aluminum bronze, brass, copper, and certain stainless steels.	**Carbide C1 (K35)** (T-A® / GEN2 T-A®) Excellent for drilling free-machining steels, low/medium-carbon steels, alloy steels, high-strength steels, tool steels, and hardened steels.	**Carbide N2** (T-A®) Allied's N2 carbide is used with CVD diamond coating. This improves the insert's hardness, durability, and performance, which extends tool life between 30 - 50x over uncoated carbide.

Insert Geometries

There's a Geometry for That

Allied Machine knows there isn't a one-size-fits-all solution when it comes to holemaking. To better accommodate the countless holes our customers drill, we have developed multiple geometry options with new geometries in development at all times.

If you're unsure which geometry would be best for your application, give our Application Engineers a call. They're standing by ready to point you in the right direction.

1.330.343.4283

1.800.321.5537 (toll free United States and Canada)

appeng@alliedmachine.com

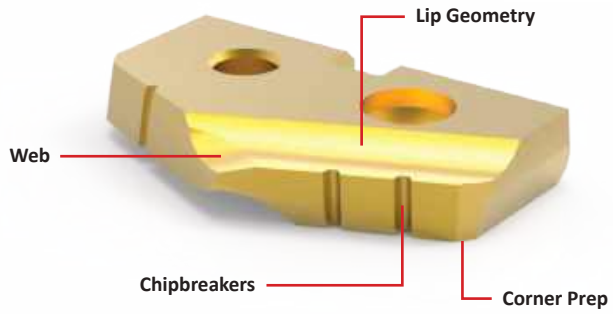

GEN2 T-A® Drill Inserts

Standard

- Offers substantial increases in penetration rates and tool life.
- Improves centering, drill stability, chip formation, and lowers drill forces.
- Provides smoother breakout on through hole applications.

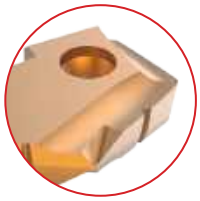

High Efficiency (-HE)

- Excellent chip formation in materials with very high elasticity/ductility and poor chip forming conditions.
- Effective in lower-powered machines.
- Material example: low-carbon steel (not suitable for stainless steel).

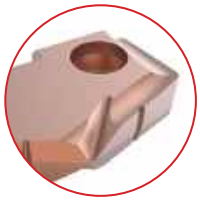

T-A® Drill Inserts

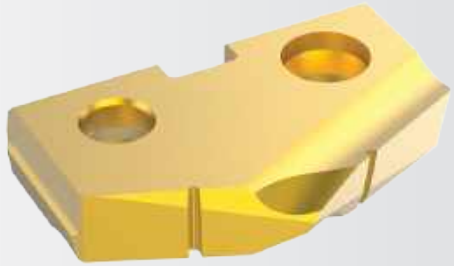

Standard

- Offers excellent penetration rates and tool life.
- Smooth breakout on through holes.
- Increases drill stability and chip formation.
- Ideally suited for low-to-high rigidity machining applications.

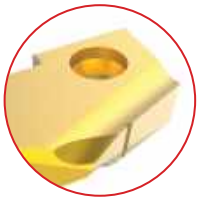

Tiny Chip (-TC)

- Unique lip and point design for excellent chip control.
- Improved capabilities in long-chipping materials such as low-carbon steels and soft alloy steels.
- Enhanced performance in lower-powered machines for better chip formation at lower feed rates.

Corner Radius (-CR)

- Improves exit burrs.
- Excellent surface finish in most applications.
- Improves heat dispersion and tool life.
- Can be used in addition to other geometries (as a special).

Special Corner Preparation (-SK)

- Ideal for machining cast iron materials.
- Larger than a standard corner clip.
- Improves heat resistance.
- Standard feature on CI, HI, and HR geometries.

continued on next page

Cam Point (-CP)

- Helical cam ground point.
- Improves drill stability and centering characteristics.
- Reduces bellmouthing when using longer holders.
- Target materials: steels, cast/forged steels, cast iron.

High Impact (-HI)

- Designed for materials with hardness > 200 BHN (700 N/mm^2).
- Enhances chip formation in materials with high elasticity/ductility and poor chip forming characteristics.
- SK corner clip improves tool life.
- Target materials: structural/cast and forged steels (not suitable for stainless steel).

High Rake (-HR)

- Designed for materials with hardness < 200 BHN (700 N/mm^2).
- Improves chip formation in materials with very high elasticity/ductility, extremely poor chip forming characteristics, and low material hardness.
- SK corner clip improves tool life.
- Target materials: soft steels, steel castings and forgings (not suitable for stainless steel).

Cast Iron (-CI)

- Specifically designed for use in grey and white cast irons.
- Exceptional edge strength.
- SK2 corner preparation for improved tool life.
- Standard geometry on C3 (K10) carbide inserts.

Aluminum (-AN)

- First choice for machining aluminum.
- Enhanced geometry improves chip formation and hole quality.
- TiN coating improves heat resistance and extends tool life.

90° Spot and Chamfer (-SP)

- Center cutting web design improves stability and strength.
- Eliminates the need for a secondary chamfering operation.
- Available with chipbreakers (see -SW below).

90° Spot and Chamfer (-SW)

- Center cutting web design improves stability and strength.
- Eliminates the need for a secondary chamfering operation.
- With added chipbreakers.

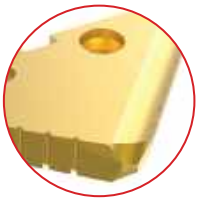

Notch Point® (-NP)

- Reduces bellmouth and lead-off.
- Increases stability in deep hole applications.
- Reduces thrust.
- Can be used in addition to other geometries like cast iron, high rake, and high impact.

High Impact Notch Point® (-IN)

- Combination of high impact and Notch Point geometries.
- Increases stability in deep hole applications.
- Enhances chip formation in materials with high elasticity/ductility and poor chip forming characteristics.

High Rake Notch Point® (-RN)

- Combination of high rake and Notch Point geometries.
- Reduces bellmouth and lead-off.
- Improves chip formation in materials with very high elasticity/ductility, extremely poor chip forming characteristics, and low material hardness.

Cast Iron Notch Point® (-CN)

- Combination of cast iron and Notch Point geometries.
- Increases stability in deep hole applications.
- Specifically designed for use in grey and white cast irons.

Brass (-BR)

- Improves tool life due to the specialized geometry and edge preparation.
- Reduces self-feed tendency.

Flat Bottom (-FB)

- Ideal for flattening or squaring the bottom of preexisting holes with high rigidity.
- Includes small 10° point on the nose of the insert.
- Available without chipbreakers (see -FN below).

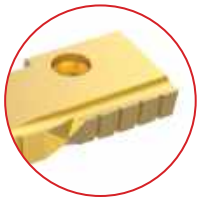

Flat Bottom (-FN)

- Ideal for flattening or squaring the bottom of preexisting holes with high rigidity.
- Includes small 10° point on the nose of the insert.
- Available with chipbreakers (see -FB above).

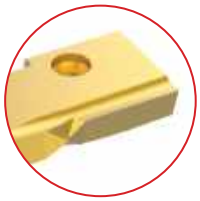

Available Standard Insert Geometries

The following table shows which geometries are available as a standard item (based on insert type and series). If you need a geometry on your insert but it is not listed as available, please call the Application Engineering department to discuss quoting your insert as a special to include the desired geometry.

Additional lead time and process fees may apply.

		GEN2 T-A®			T-A®						
					HSS Inserts				Carbide Inserts		
Available Additional Geometries		Y - 2 Series	3 - 4 Series	5 - 8 Series	Y - 2 Series	3 Series	4 Series	5 - 8 Series	Y - Z Series	0 - 2 Series	3 Series
-AN	Aluminum				●				●	●	
-BT	BT-A Specific								●	●	●
-BR	Brass		●	●	●	●	●	●	●	●	●
-CI	Cast Iron		●		●	●	●		●	●	●
-CN	Cast Iron Notch Point®				●	●			●	●	●
-CP	Cam Point				●				●	●	
-CR	Corner Radius		●	●	●	●	●	●	●	●	●
-FB	Flat Bottom				●	●	●		●	●	
-FN	Flat Bottom				●	●	●		●	●	
-HE	High Effciency	●	●								
-HI	High Impact		●	●	●	●	●	●	●	●	●
-HR	High Rake		●	●	●	●	●	●	●	●	●
-IN	High Impact Notch Point®				●	●			●	●	●
-NC	No Chipbreaker		●	●	●	●	●	●	●	●	●
-NP	Notch Point®				●	●			●	●	●
-RN	High Rake Notch Point®				●	●			●	●	●
-SK	Special Corner Preparation		●	●	●	●	●	●	●	●	●
-SP	90° Spot and Chamfer				●	●					
-SW	90° Spot and Chamfer				●	●					
-TC	Tiny Chip				●	●	●	●	●	●	●
-WC	No Corner Clips		●	●	●	●	●	●	●	●	●

Drill Holders

Holder Length Options (for use with both T-A GEN2 and T-A inserts)

Stub Length | Series: Y - 3 (straight flute flanged shank only)

Short Length | Series: ALL

Intermediate Length | Series: ALL

Standard Length | Series: ALL

⚠ **Standard Plus Length** | Series: Y - 2 (helical flute flanged shank only)

⚠ **Extended Length** | Series: 0 - 3

⚠ **Long Length** | Series: 0 - 2

⚠ **Long Plus Length** | Series: 0

⚠ **XL Length** | Series: ALL

⚠ **3XL Length** | Series: ALL

Holder Shank Options

ER Collet Shank
Series: Y, Z, 0

Straight Shank
Series: ALL

Morse Taper Shank
Series: ALL

Flanged Shank
Series: ALL

Half Series Holders (0.5, 1.5, 2.5)

Half series holders are recommended when running carbide inserts toward the upper end of the series drill range, as well as in tougher applications requiring more insert support and holder strength. **NOTE:** Only specified half series inserts should be used with half series holders.

Standard Series Insert +
Standard Series Holder

Half Series Insert +
Standard Series Holder

Half Series Insert +
Half Series Holder

Standard Series Insert +
Half Series Holder

⚠ **WARNING** Refer to Speed and Feed charts for recommended adjustments to speeds and feeds. Refer to page A30: 146 for deep hole drilling guidelines in this section of the catalog. Visit **www.alliedmachine.com/DeepHoleGuidelines** for the most up-to-date information and procedures. Factory technical assistance is available for your specific applications through our Application Engineering Team.

Technical Information

Next Level Solutions: GEN2 T-A®

What takes a solution to the next level? When you make innovative designs and enhancements to a product that already achieves high performance results, you push the boundaries of what is known. And when you push the known boundaries, the unknown becomes the next level.

After all, everything begins as unknown.

AM300® Coating

- ***Provides superior tool life*** at high penetration rates
- ***Improves heat resistance*** over AM200® coating
- ***Increases tool life*** up to 20% over AM200 coating

AM200® Coating

- ***Improves heat resistance*** over TiN, TiCN, and TiAlN with improved wear capabilities
- ***Increases penetration rates***
- ***Increases tool life*** more than 20% over TiAlN coating

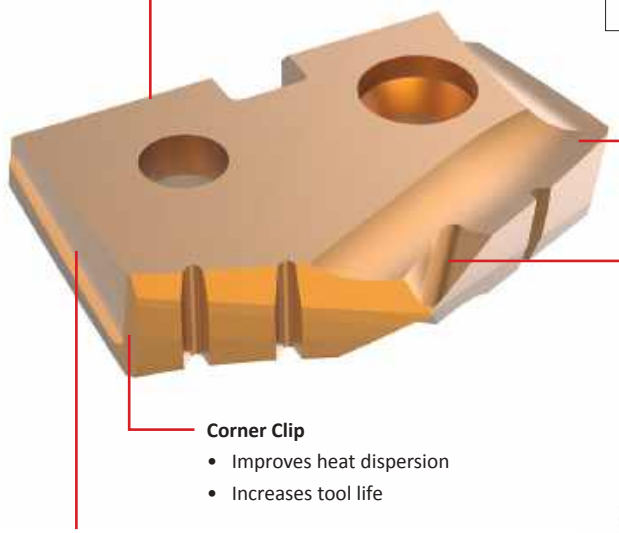

Improving Chip Formation

Achieving optimal chip formation is crucial. The quality of the chips being produced directly affects everything in the entire process: the cycle time, the tool life, the scrap rate, and the quality and condition of the final machined hole.

We know how important chip formation is. That's why we constantly improve and develop new geometries to create a better, more productive T-A product.

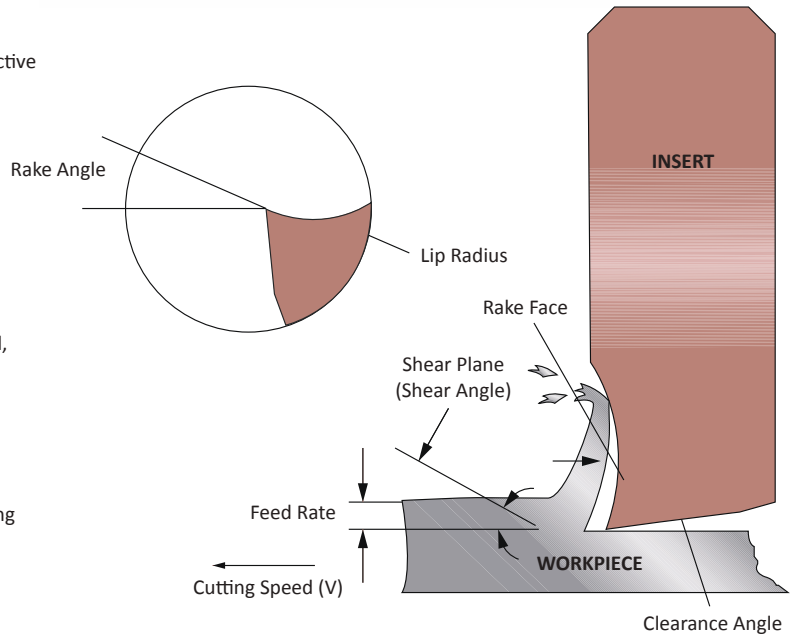

Setting Up New Applications

- Check coolant flows adequately through the tool before beginning
- Drill a short hole 1xD deep initially
- The chips produced should be short in length and material colored, not straw or blue
- Measure the hole produced to check that it is within the desired tolerance
- If all is correct, continue to machine the remainder of the hole
- Ensure the drilling process is quiet and smooth with no chip packing

Wear vs Toughness

When selecting a grade of cutting tool material for your application, both wear resistance and grade toughness should be considered. The greater the wear resistance a cutting tool material exhibits, the more likely chipping or fracture is to occur. This requires more rigid machining conditions.

On the other hand, to effectively machine some materials, cobalt or carbide grades of cutting tool material may be required. The graph will aid you in the selection of a cutting tool material with the right combination of wear resistance and toughness to make your application both efficient and cost-effective.

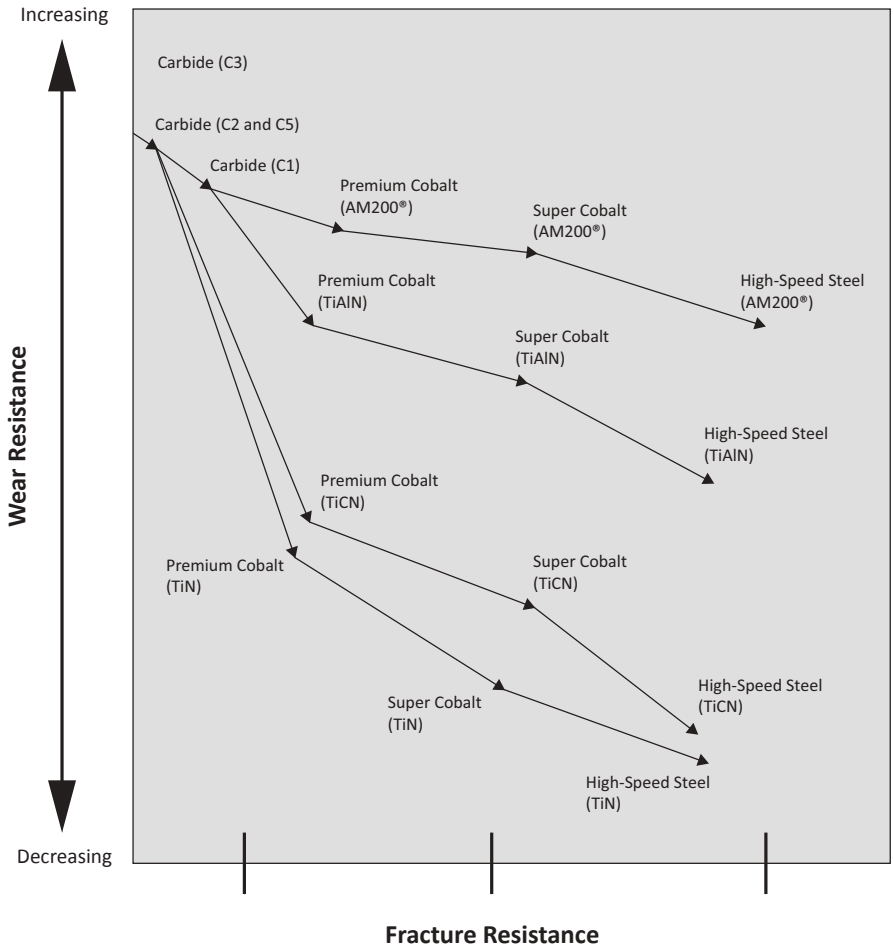

T-A System Guidelines for Use

- Select the shortest holder possible for the application.
- Ensure the T-A holder is held securely and is within 0.003" (0.08 mm) of center line.
- The T-A insert should be installed in the slot of the holder using the TORX Plus screws provided. These should be tightened to the values listed on the T-A holder pages.
- The holder slot should be clean from dirt or debris.
- Check that the insert outer diameter is a minimum of 0.012" (0.30 mm) larger than the holder body diameter.
- Use the recommended cutting data section for guidance when selecting correct insert grades, along with speeds and feeds.
- **NOTE:** These cutting parameters are starting conditions only and make no allowance for machine or component rigidity.

Product Nomenclature

T-A Drill Inserts

4	5	3	H	–	0115
1	2	3	4		5

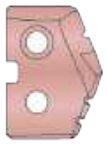

1. Insert	2. Material	3. Series		4. Coating	5. Diameter
1 = T-A®	**3** = HSS	**Y** = Y series	**4** = 4 series	**P** = AM300®	**0017** = Inch
4 = GEN2 T-A®	**5** = Super cobalt	**Z** = Z series	**5** = 5 series	**H** = AM200®	**.515** = Decimal
	8 = Premium cobalt	**0** = 0 series	**6** = 6 series	**A** = TiAlN	**13** = Metric
	C1 = C1 (K35) carbide	**1** = 1 series	**7** = 7 series	**N** = TiCN	
	C2 = C2 (K20) carbide	**2** = 2 series	**8** = 8 series	**T** = TiN	
	C3 = C3 (K10) carbide	**3** = 3 series			
	C5 = C5 (P40) carbide				

Ordering Instructions

▶ **Standard Items:**

All orders are processed through Allied Machine's computerized order entry and invoicing system. Please specify the correct item number as well as a full description of the desired item(s) so we can process your order accurately and efficiently. Incorrect item numbers and/or descriptions will cause unnecessary delays and possible returns that are subject to a 10% restocking charge. Your assistance is critical if we are to achieve our goal of processing orders and shipping in-stock items error free within 24 hours.

▶ **Nonstandard Sizes and Geometries:**

Nonstandard diameter	Substitute the required diameter in place of the standard diameter.	
	Ex: Standard item number	**132T-0101**
	Nonstandard diameter with standard geometry (inch)	**132T-1.0200** (Note: 4 decimal places)
	Nonstandard diameter with standard geometry (metric)	**132T-34.20** (Note: 2 decimal places)

Special geometry	Add the special geometry code at the end of the standard item number (see pages A30: 4 - 6 for geometry options).	
	Ex: Standard item number	**132T-0101**
	Standard diameter with special geometry (inch)	**132T-0101-SK**

Nonstandard diameter with special geometry	Replace the standard diameter and add the special geometry code.	
	Ex: Standard item number	**132T-0101**
	Nonstandard diameter with special geometry (inch)	**132T-1.0200-SK** (Note: 4 decimal places)

Reference Key

Symbol	Attribute
D_1	Insert diameter
T_1	Insert thickness

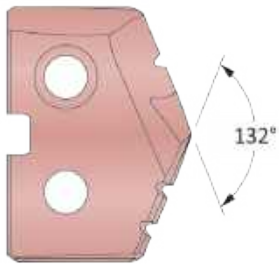

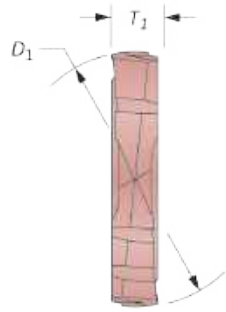

Product Nomenclature

T-A Drill Holders

2	30	20	S	–	004	I
1	2	3	4		5	6

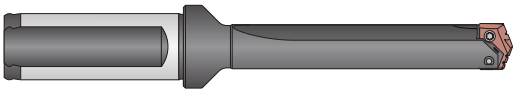

1. Holder
2 = T-A holder

2. Length
10 = Stub
20 = Short
30 = Intermediate
40 = Standard
45 = Standard Plus
50 = Extended
60 = Long
65 = Long Plus
70 = XL
90 = 3XL

3. Series	
Y0 = Y series	**20** = 2 series
Z0 = Z series	**25** = 2.5 series
00 = 0 series	**30** = 3 series
05 = 0.5 series	**40** = 4 series
10 = 1 series	**50** = 5 series
15 = 1.5 series	**70** = 7 series

4. Flute
S = Straight
H = Helical

5. Shank Designator		
Morse Taper	**Imperial**	**Metric**
002 = 2MT	**063** = 5/8"	**16** = 16 mm
003 = 3MT	**075** = 3/4"	**20** = 20 mm
004 = 4MT	**100** = 1"	**25** = 25 mm
005 = 5MT	**125** = 1-1/4"	**32** = 32 mm
	150 = 1-1/2"	**40** = 40 mm
	175 = 1-3/4"	**50** = 50 mm
	200 = 2"	
	300 = 3"	

6. Shank Code
I = Imperial Morse taper
M = Metric Morse taper
L = Lathe shank
F = Flanged shank
FM = Flanged metric shank
ER = ER Collet

Reference Key

Symbol	Attribute
D_2	Shank diameter
L_1	Overall length
L_2	Drill depth
L_3	Holder reference length
L_4	Holder length
L_7	Shank length
P_1	Rear pipe tap
P_2	Side pipe tap
RCA	Corresponding RCA item number
MT	Morse taper size
ER	ER collet size

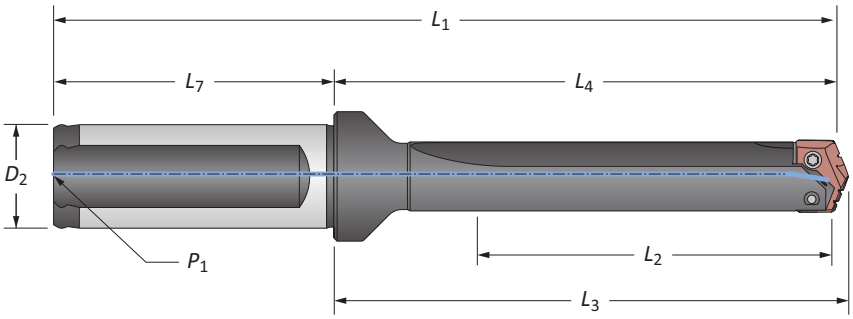

GEN2 T-A® Drill Inserts

Y Series | Diameter Range: 0.374" - 0.436" (9.50 mm - 11.07 mm)

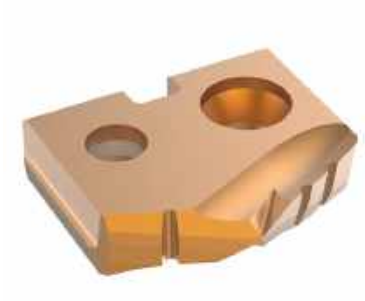

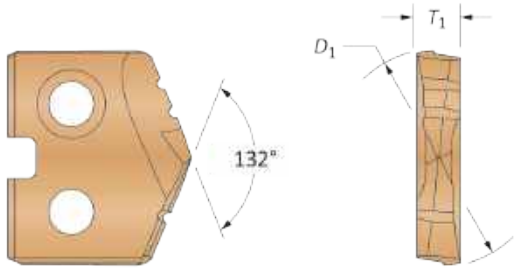

HSS Inserts – Super Cobalt • Carbide Inserts – C2 (K20) | C1 (K35)

Insert				HSS Part No.	Carbide Part No.	
Fractional Equivalent	D_1 inch	D_1 mm	T_1	AM200® Super Cobalt	AM300® C2 (K20)	AM300® C1 (K35)
—	0.3740	9.50	3/32	**45YH-9.5**	**4C2YP-9.5**	**4C1YP-9.5**
3/8	0.3750	9.53	3/32	**45YH-0012**	**4C2YP-0012**	**4C1YP-0012**
—	0.3860	9.80	3/32	**45YH-.386**	**4C2YP-.386**	**4C1YP-.386**
25/64	0.3906	9.92	3/32	**45YH-.390**	**4C2YP-.390**	**4C1YP-.390**
—	0.3937	10.00	3/32	**45YH-10**	**4C2YP-10**	**4C1YP-10**
—	0.4016	10.20	3/32	**45YH-10.2**	**4C2YP-10.2**	**4C1YP-10.2**
13/32	0.4063	10.32	3/32	**45YH-0013**	**4C2YP-0013**	**4C1YP-0013**
—	0.4134	10.50	3/32	**45YH-10.5**	**4C2YP-10.5**	**4C1YP-10.5**
27/64	0.4219	10.72	3/32	**45YH-.421**	**4C2YP-.421**	**4C1YP-.421**
—	0.4252	10.80	3/32	**45YH-10.8**	**4C2YP-10.8**	**4C1YP-10.8**
—	0.4331	11.00	3/32	**45YH-11**	**4C2YP-11**	**4C1YP-11**

A30: 112 - 143

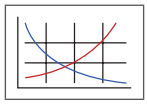

A30: 18 - 21

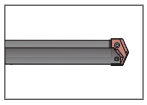

A30: 4 - 6

Inserts sold in quantities of 2.

Coatings not listed above can be supplied as nonstocked standards. Process fees apply.

TiN = 45YT-XXXX	**TiAlN** = 45YA-XXXX
TiCN = 45YN-XXXX	**AM200®** = 45YH-XXXX

T-A® Drill Inserts

Y Series | HSS | Diameter Range: 0.374" - 0.436" (9.50 mm - 11.07 mm)

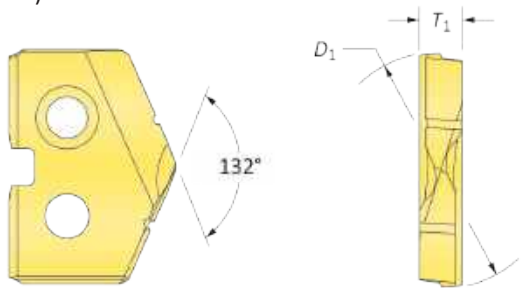

HSS Inserts – Premium Cobalt

Insert				Part No.		
Fractional Equivalent	D_1 inch	D_1 mm	T_1	TiN	TiAlN	TiCN
—	0.3740	9.50	3/32	**18YT-9.5**	**18YA-9.5**	**18YN-9.5**
3/8	0.3750	9.53	3/32	**18YT-0012**	**18YA-0012**	**18YN-0012**
—	0.3860	9.80	3/32	**18YT-.386**	**18YA-.386**	**18YN-.386**
25/64	0.3906	9.92	3/32	**18YT-.390**	**18YA-.390**	**18YN-.390**
—	0.3937	10.00	3/32	**18YT-10**	**18YA-10**	**18YN-10**
—	0.4016	10.20	3/32	**18YT-10.2**	**18YA-10.2**	**18YN-10.2**
13/32	0.4063	10.32	3/32	**18YT-0013**	**18YA-0013**	**18YN-0013**
—	0.4134	10.50	3/32	**18YT-10.5**	**18YA-10.5**	**18YN-10.5**
27/64	0.4219	10.72	3/32	**18YT-.421**	**18YA-.421**	**18YN-.421**
—	0.4252	10.80	3/32	**18YT-10.8**	**18YA-10.8**	**18YN-10.8**
—	0.4331	11.00	3/32	**18YT-11**	**18YA-11**	**18YN-11**

A30: 112 - 143

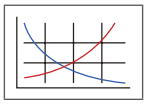

Key on A30: 1

A30: 18 - 21

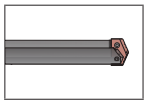

A30: 4 - 6

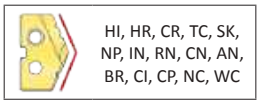

Inserts sold in quantities of 2.

Coatings not listed above can be supplied as nonstocked standards. Process fees apply.

TiN = 18YT-XXXX	**TiAlN** = 18YA-XXXX
TiCN = 18YN-XXXX	**AM200®** = 18YH-XXXX

T-A® Drill Inserts

Y Series | HSS | Diameter Range: 0.374" - 0.436" (9.50 mm - 11.07 mm)

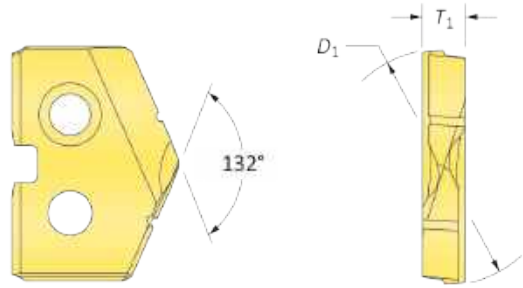

HSS Inserts – Super Cobalt

Insert				Part No.		
Fractional Equivalent	D_1 inch	D_1 mm	T_1	TiN	TiAlN	TiCN
—	0.3740	9.50	3/32	**15YT-9.5**	**15YA-9.5**	**15YN-9.5**
3/8	0.3750	9.53	3/32	**15YT-0012**	**15YA-0012**	**15YN-0012**
—	0.3860	9.80	3/32	**15YT-.386**	**15YA-.386**	**15YN-.386**
25/64	0.3906	9.92	3/32	**15YT-.390**	**15YA-.390**	**15YN-.390**
—	0.3937	10.00	3/32	**15YT-10**	**15YA-10**	**15YN-10**
—	0.4016	10.20	3/32	**15YT-10.2**	**15YA-10.2**	**15YN-10.2**
13/32	0.4063	10.32	3/32	**15YT-0013**	**15YA-0013**	**15YN-0013**
—	0.4134	10.50	3/32	**15YT-10.5**	**15YA-10.5**	**15YN-10.5**
27/64	0.4219	10.72	3/32	**15YT-.421**	**15YA-.421**	**15YN-.421**
—	0.4252	10.80	3/32	**15YT-10.8**	**15YA-10.8**	**15YN-10.8**
—	0.4331	11.00	3/32	**15YT-11**	**15YA-11**	**15YN-11**

A30: 112 - 143

Key on A30: 1

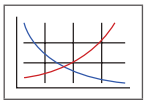

A30: 18 - 21

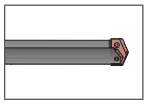

A30: 4 - 6

HI, HR, CR, TC, SK, NP, IN, RN, CN, AN, BR, CI, CP, NC, WC

Inserts sold in quantities of 2.

Coatings not listed above can be supplied as nonstocked standards. Process fees apply.

TiN = 15YT-XXXX	**TiAlN** = 15YA-XXXX
TiCN = 15YN-XXXX	**AM200®** = 15YH-XXXX

T-A® Drill Inserts

Y Series | HSS | Diameter Range: 0.374" - 0.436" (9.50 mm - 11.07 mm)

90° Spot & Chamfer

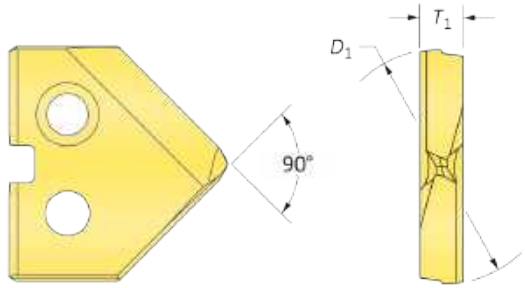

Flat Bottom

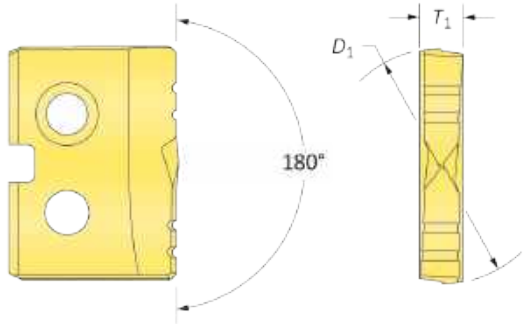

HSS Inserts – Super Cobalt

Insert				90° Spot & Chamfer Part No.			Flat Bottom Part No.
Fractional Equivalent	D_1 inch	D_1 mm	T_1	TiN	TiAlN	TiCN	TiN
—	0.3740	9.50	3/32	**15YT-9.5-SP**	**15YA-9.5-SP**	**15YN-9.5-SP**	**15YT-9.5-FB**
3/8	0.3750	9.53	3/32	**15YT-0012-SP**	**15YA-0012-SP**	**15YN-0012-SP**	**15YT-0012-FB**
—	0.3860	9.80	3/32	**15YT-.386-SP**	**15YA-.386-SP**	**15YN-.386-SP**	**15YT-.386-FB**
25/64	0.3906	9.92	3/32	**15YT-.390-SP**	**15YA-.390-SP**	**15YN-.390-SP**	**15YT-.390-FB**
—	0.3937	10.00	3/32	**15YT-10-SP**	**15YA-10-SP**	**15YN-10-SP**	**15YT-10-FB**
—	0.4016	10.20	3/32	**15YT-10.2-SP**	**15YA-10.2-SP**	**15YN-10.2-SP**	**15YT-10.2-FB**
13/32	0.4063	10.32	3/32	**15YT-0013-SP**	**15YA-0013-SP**	**15YN-0013-SP**	**15YT-0013-FB**
—	0.4134	10.50	3/32	**15YT-10.5-SP**	**15YA-10.5-SP**	**15YN-10.5-SP**	**15YT-10.5-FB**
27/64	0.4219	10.72	3/32	**15YT-.421-SP**	**15YA-.421-SP**	**15YN-.421-SP**	**15YT-.421-FB**
—	0.4252	10.80	3/32	**15YT-10.8-SP**	**15YA-10.8-SP**	**15YN-10.8-SP**	**15YT-10.8-FB**
—	0.4331	11.00	3/32	**15YT-11-SP**	**15YA-11-SP**	**15YN-11-SP**	**15YT-11-FB**

A30: 112 - 143

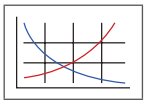

Key on A30: 1

A30: 18 - 21

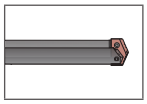

A30: 4 - 6

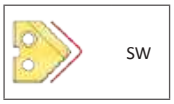

A30: 4 - 6

Inserts sold in quantities of 2.

Coatings not listed above can be supplied as nonstocked standards. Process fees apply.

TiN = 15YT-XXXX	**TiAlN** = 15YA-XXXX
TiCN = 15YN-XXXX	**AM200®** = 15YH-XXXX

T-A® Drill Inserts

Y Series | Carbide | Diameter Range: 0.374" - 0.436" (9.50 mm - 11.07 mm)

Standard

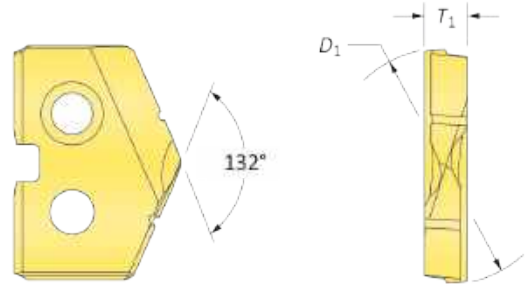

Flat Bottom

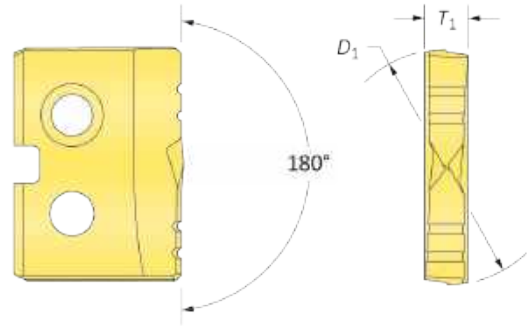

Carbide Inserts – C2 (K20)

Insert				Part No.		Flat Bottom Part No.
Fractional Equivalent	D_1 inch	D_1 mm	T_1	TiN	TiAlN	TiN
—	0.3740	9.50	3/32	**1C2YT-9.5**	**1C2YA-9.5**	**1C2YT-9.5-FB**
3/8	0.3750	9.53	3/32	**1C2YT-0012**	**1C2YA-0012**	**1C2YT-0012-FB**
—	0.3860	9.80	3/32	**1C2YT-.386**	**1C2YA-.386**	**1C2YT-.386-FB**
25/64	0.3906	9.92	3/32	**1C2YT-.390**	**1C2YA-.390**	**1C2YT-.390-FB**
—	0.3937	10.00	3/32	**1C2YT-10**	**1C2YA-10**	**1C2YT-10-FB**
—	0.4016	10.20	3/32	**1C2YT-10.2**	**1C2YA-10.2**	**1C2YT-10.2-FB**
13/32	0.4063	10.32	3/32	**1C2YT-0013**	**1C2YA-0013**	**1C2YT-0013-FB**
—	0.4134	10.50	3/32	**1C2YT-10.5**	**1C2YA-10.5**	**1C2YT-10.5-FB**
27/64	0.4219	10.72	3/32	**1C2YT-.421**	**1C2YA-.421**	**1C2YT-.421-FB**
—	0.4252	10.80	3/32	**1C2YT-10.8**	**1C2YA-10.8**	**1C2YT-10.8-FB**
—	0.4331	11.00	3/32	**1C2YT-11**	**1C2YA-11**	**1C2YT-11-FB**

A30: 112 - 143

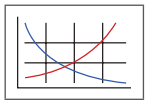

Key on A30: 1

A30: 18 - 21

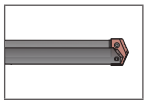

A30: 4 - 6

HI, HR, CR, TC, SK, NP, IN, RN, CN, AN, BR, CI, CP, NC, WC, BT

A30: 4 - 6

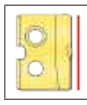

FN

Coatings not listed above can be supplied as nonstocked standards. Process fees apply.

Inserts sold in quantities of 2.

TiN = 1C2YT-XXXX	**TiAlN** = 1C2YA-XXXX
TiCN = 1C2YN-XXXX	**AM200®** = 1C2YH-XXXX

T-A® Drill Inserts

Y Series | Carbide | Diameter Range: 0.374" - 0.436" (9.50 mm - 11.07 mm)

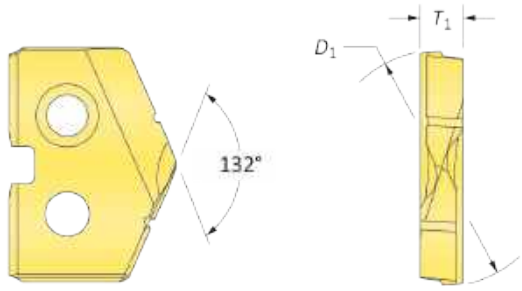

Carbide Inserts – C5 (P40) | C3 (K10) | N2

Insert				C5 Part No.		C3 Part No.	N2 Part No.
Fractional Equivalent	D_1 inch	D_1 mm	T_1	TiN	TiAlN	TiAlN (Cast Iron)	Diamond Film*
—	0.3740	9.50	3/32	**1C5YT-9.5**	**1C5YA-9.5**	**1C3YA-9.5-CI**	**1N2YD-9.5**
3/8	0.3750	9.53	3/32	**1C5YT-0012**	**1C5YA-0012**	**1C3YA-0012-CI**	**1N2YD-0012**
—	0.3860	9.80	3/32	**1C5YT-.386**	**1C5YA-.386**	**1C3YA-.386-CI**	**1N2YD-.386**
25/64	0.3906	9.92	3/32	**1C5YT-.390**	**1C5YA-.390**	**1C3YA-.390-CI**	**1N2YD-.390**
—	0.3937	10.00	3/32	**1C5YT-10**	**1C5YA-10**	**1C3YA-10-CI**	**1N2YD-10**
—	0.4016	10.20	3/32	**1C5YT-10.2**	**1C5YA-10.2**	**1C3YA-10.2-CI**	**1N2YD-10.2**
13/32	0.4063	10.32	3/32	**1C5YT-0013**	**1C5YA-0013**	**1C3YA-0013-CI**	**1N2YD-0013**
—	0.4134	10.50	3/32	**1C5YT-10.5**	**1C5YA-10.5**	**1C3YA-10.5-CI**	**1N2YD-10.5**
27/64	0.4219	10.72	3/32	**1C5YT-.421**	**1C5YA-.421**	**1C3YA-.421-CI**	**1N2YD-.421**
—	0.4252	10.80	3/32	**1C5YT-10.8**	**1C5YA-10.8**	**1C3YA-10.8-CI**	**1N2YD-10.8**
—	0.4331	11.00	3/32	**1C5YT-11**	**1C5YA-11**	**1C3YA-11-CI**	**1N2YD-11**

*Diamond Film is only available in standard geometry. For additional geometries, please contact Application Engineering.

A30: 112 - 143

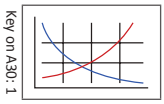

Key on A30: 1

A30: 18 - 21

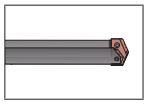

A30: 4 - 6

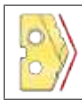

HI, HR, CR, TC, SK, NP, IN, RN, CN, AN, BR, CI, CP, NC, WC, BT

Inserts sold in quantities of 2.

Coatings not listed above can be supplied as nonstocked standards. Process fees apply.

TiN = 1C5YT-XXXX	**TiAlN** = 1C5YA-XXXX
TiCN = 1C5YN-XXXX	**AM200®** = 1C5YH-XXXX

T-A® Drill Insert Holders

Y Series | Flange Shank | Diameter Range: 0.374" - 0.436" (9.50 mm - 11.07 mm)

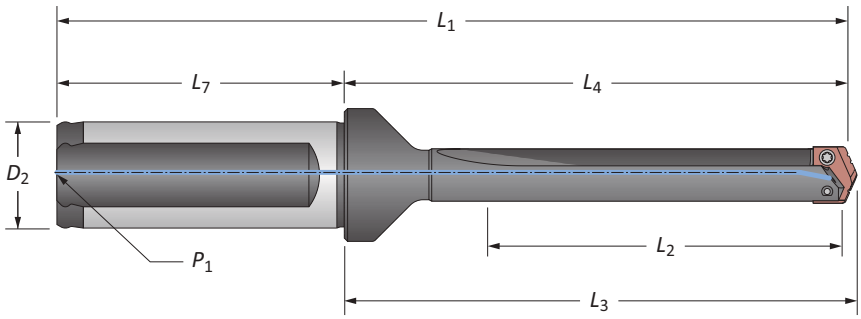

Straight Flute

	Length	Body L_2	Body L_4	Body L_3	Body L_1	Shank D_2	Shank L_7	Shank P_1	Part No.
i	Short	1.141	2.406	2.496	4.436	3/4	2.030	1/8 NPT	**220Y0S-075F**
i	Standard	2.266	3.531	3.621	5.561	3/4	2.030	1/8 NPT	**240Y0S-075F**
i	Extended	4.266	5.531	5.621	7.561	3/4	2.030	1/8 NPT	⚠ **250Y0S-075F**
m	Short	28.9	61.1	63.4	111.1	20	50.0	1/8 BSPT	**220Y0S-20FM**
m	XL	219.4	251.6	253.9	301.6	20	50.0	1/8 BSPT	⚠ **270Y0S-20FM**
m	3XL	287.6	319.9	322.1	369.9	20	50.0	1/8 BSPT	⚠ **290Y0S-20FM**

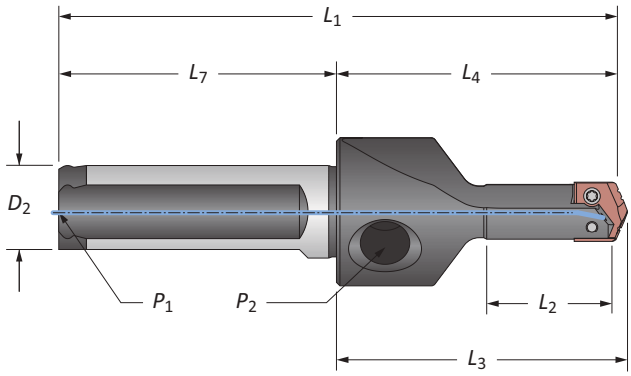

Straight Flute (Stub Length)

	Length	Body L_2	Body L_4	Body L_3	Body L_1	Shank D_2	Shank L_7	Shank P_1	Part No.
i	Stub	0.861	1.875	1.965	3.750	5/8	1.875	1/16 NPT	**210Y0S-063F**
m	Stub	21.9	47.6	49.9	95.6	16	48.0	1/16 BSPT	**210Y0S-16FM**

NOTE: Stub length holders have a 1/8" side pipe tap (P_2).

Connection Accessories

Insert Screws	Nylon Locking Screws	Insert Driver	Preset Torque Hand Driver	Replacement Tips	Admissible Tightening Torque*
724-IP7-1	724N-IP7-1	8IP-7	8IP-7TL	8IP-7B	7.4 in-lbs (84 N-cm)

*Tightening torques are calculated with a friction coefficient of μ = 0.14 and develop 90% of ultimate yield strength.

A30: 12 - 17

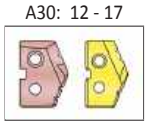

i = Imperial (in)
m = Metric (mm)
Screws sold in quantities of 10.

⚠ **WARNING** Refer to Speed and Feed charts for recommended adjustments to speeds and feeds. Refer to page A30: 146 for deep hole drilling guidelines in this section of the catalog. Visit **www.alliedmachine.com/DeepHoleGuidelines** for the most up-to-date information and procedures. Factory technical assistance is available for your specific applications through our Application Engineering Team.

T-A® Drill Insert Holders

Y Series | Flange Shank | Diameter Range: 0.374" - 0.436" (9.50 mm - 11.07 mm)

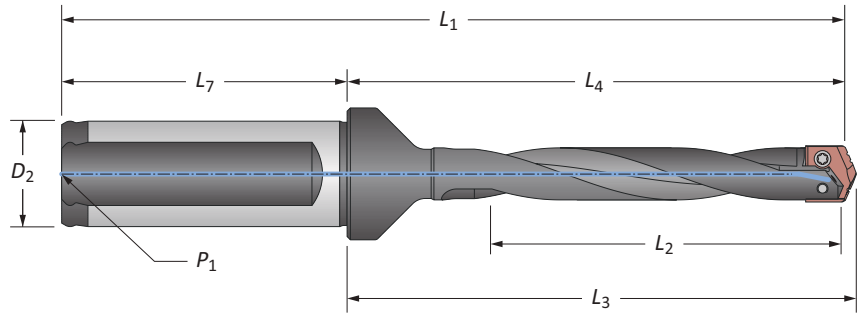

Helical Flute

	Length	Body L_2	Body L_4	Body L_3	Body L_1	Shank D_2	Shank L_7	Shank P_1	Part No.
i	Standard	2.860	3.531	3.621	5.561	3/4	2.030	1/8 NPT	**240Y0H-075F**
i	Standard Plus	3.872	4.543	4.633	6.573	3/4	2.030	1/8 NPT	⚠ **245Y0H-075F**
i	Extended	4.860	5.531	5.621	7.561	3/4	2.030	1/8 NPT	⚠ **250Y0H-075F**
m	Standard	72.6	89.7	92.0	139.7	20	50.0	1/8 BSPT	**240Y0H-20FM**
m	Standard Plus	98.3	115.4	117.7	165.4	20	50.0	1/8 BSPT	⚠ **245Y0H-20FM**
m	Extended	123.4	140.5	142.8	190.5	20	50.0	1/8 BSPT	⚠ **250Y0H-20FM**

Connection Accessories

Insert Screws	Nylon Locking Screws	Insert Driver	Preset Torque Hand Driver	Replacement Tips	Admissible Tightening Torque*
724-IP7-1	724N-IP7-1	8IP-7	8IP-7TL	8IP-7B	7.4 in-lbs (84 N-cm)

*Tightening torques are calculated with a friction coefficient of μ = 0.14 and develop 90% of ultimate yield strength.

A30: 12 - 17

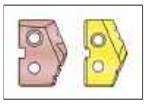

Key on A30: 1

i = Imperial (in)
m = Metric (mm)
Screws sold in quantities of 10.

⚠ **WARNING** Refer to Speed and Feed charts for recommended adjustments to speeds and feeds. Refer to page A30: 146 for deep hole drilling guidelines in this section of the catalog. Visit **www.alliedmachine.com/DeepHoleGuidelines** for the most up-to-date information and procedures. Factory technical assistance is available for your specific applications through our Application Engineering Team.

T-A® Drill Insert Holders

Y Series | Taper Shank | Diameter Range: 0.374" - 0.436" (9.50 mm - 11.07 mm)

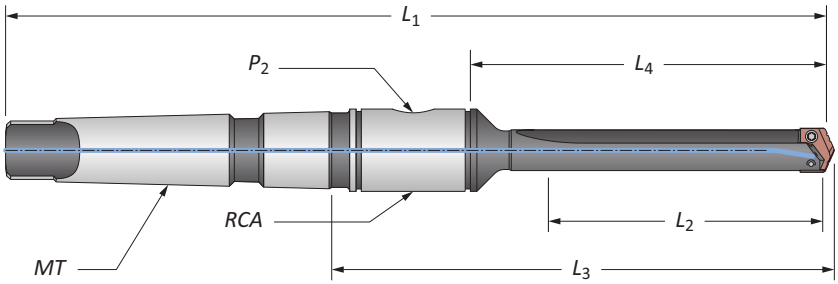

Straight Flute

	Length	Body L_2	Body L_4	Body L_3	Body L_1	Shank MT*	Shank P_2	Shank RCA	Part No.
i	Short	1.075	2.031	3.464	6.312	#2 MT	1/16 NPT	2T-2SR	**220Y0S-002I**
i	Standard	2.200	3.156	4.589	7.437	#2 MT	1/16 NPT	2T-2SR	**240Y0S-002I**
i	Extended	4.200	5.156	6.589	9.437	#2 MT	1/16 NPT	2T-2SR	⚠ **250Y0S-002I**
m	Short	27.3	51.6	88.0	160.3	#2 MT ISO	1/16 BSPT	2T-2SRM	**220Y0S-002M**

*MT ISO 296 type BEK.

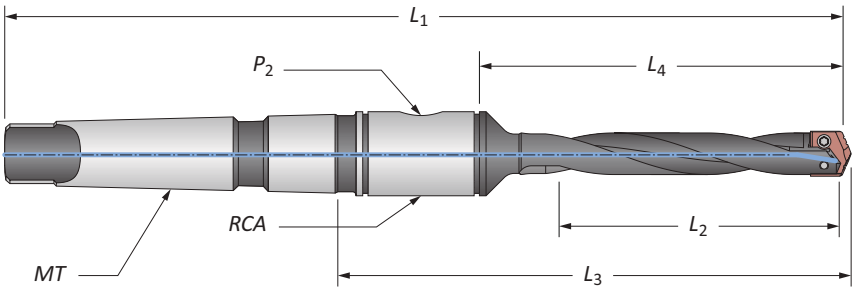

Helical Flute

	Length	Body L_2	Body L_4	Body L_3	Body L_1	Shank MT*	Shank P_2	Shank RCA	Part No.
i	Standard	2.719	3.156	4.589	7.437	#2 MT	1/16 NPT	2T-2SR	**240Y0H-002I**
i	Extended	4.719	5.156	6.589	9.437	#2 MT	1/16 NPT	2T-2SR	⚠ **250Y0H-002I**
m	Standard	69.1	80.2	116.6	188.9	#2 MT ISO	1/16 BSPT	2T-2SRM	**240Y0H-002M**
m	Extended	119.9	131.0	167.4	239.7	#2 MT ISO	1/16 BSPT	2T-2SRM	⚠ **250Y0H-002M**

*MT ISO 296 type BEK.

Connection Accessories

Insert Screws	Nylon Locking Screws	Insert Driver	Preset Torque Hand Driver	Replacement Tips	Admissible Tightening Torque*
724-IP7-1	724N-IP7-1	8IP-7	8IP-7TL	8IP-7B	7.4 in-lbs (84 N-cm)

*Tightening torques are calculated with a friction coefficient of μ = 0.14 and develop 90% of ultimate yield strength.

A30: 12 - 17

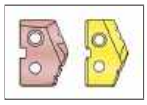

Key on A30: 1

A30: 21 & 110

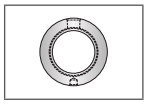

i = Imperial (in)
m = Metric (mm)
Screws sold in quantities of 10.

⚠ **WARNING** Refer to Speed and Feed charts for recommended adjustments to speeds and feeds. Refer to page A30: 146 for deep hole drilling guidelines in this section of the catalog. Visit **www.alliedmachine.com/DeepHoleGuidelines** for the most up-to-date information and procedures. Factory technical assistance is available for your specific applications through our Application Engineering Team.

T-A® Drill Insert Holders

Y Series | Straight Shank | ER Collet | Diameter Range: 0.374" - 0.436" (9.50 mm - 11.07 mm)

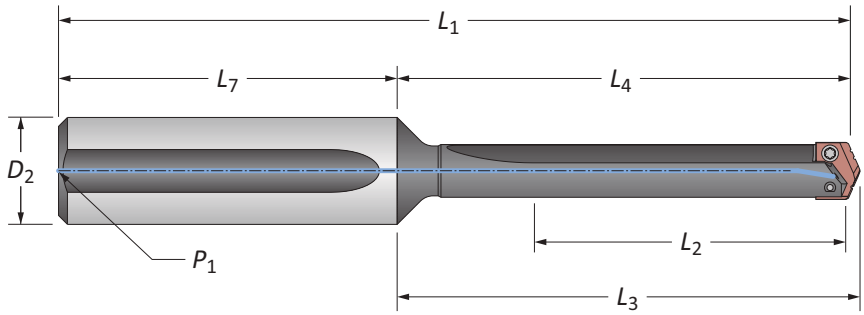

Straight Flute

	Length	Body L_2	Body L_4	Body L_3	Body L_1	Shank D_2	Shank L_7	Shank P_1	Part No.
	Short	1.080	2.031	2.121	4.406	3/4	2.375	1/8 NPT	**220Y0S-075L**
	Standard	2.205	3.156	3.246	5.531	3/4	2.375	1/8 NPT	**240Y0S-075L**
i	Extended	4.205	5.156	5.246	7.531	3/4	2.375	1/8 NPT	⚠ **250Y0S-075L**
	XL	8.580	9.531	9.621	11.906	3/4	2.375	1/8 NPT	⚠ **270Y0S-075L**
	3XL	11.267	12.218	12.308	14.593	3/4	2.375	1/8 NPT	⚠ **290Y0S-075L**

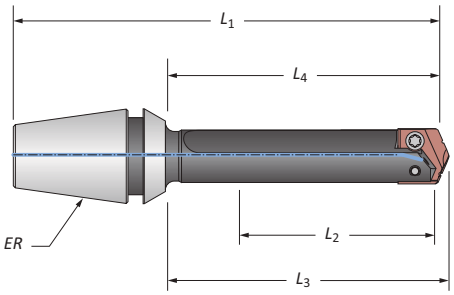

ER Collet Holder

	Body L_2	Body L_4	Body L_3	Body L_1	Body ER	Part No.	Collet Nut without Retaining Ring
m	42.5	48.5	50.8	75.8	ER-16	**210Y0S-16ER**	ER-16N
	42.5	48.5	50.8	79.8	ER-20	**210Y0S-20ER**	ER-20N

T-A Drill Accessories

Y Series | Rotary Coolant Adapters | Torx® Plus Screws

Rotary Coolant Adapter (RCA) and Accessories

	ID	OD	L_1	Driving Rod Thread	P_1	Part No.	RCA O-Rings Kit Part No.*	RCA O-Rings Replacements
i	0.750	1.750	0.875	5/16" - 18	1/8 NPT	⚠ **2T-2SR**	2T1-2SR	2T1-2OR-10
m	19.1	44.5	22.2	M8 x 1.25	1/8 BSPT	⚠ **2T-2SRM**	2T1-2SR	2T1-2OR-10

*RCA Repair Kit includes (2) O-rings, (2) snap rings, and (2) thrust washers.

⚠ Refer to page A30: 110 for proper RCA assembly and safety information.

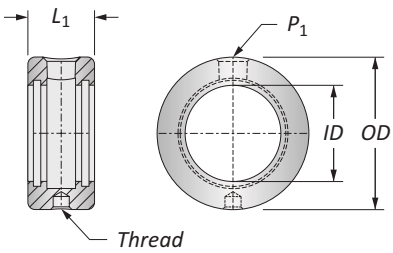

Connection Accessories

Insert Screws	Nylon Locking Screws	Insert Driver	Preset Torque Hand Driver	Replacement Tips	Admissible Tightening Torque*
724-IP7-1	724N-IP7-1	8IP-7	8IP-7TL	8IP-7B	7.4 in-lbs (84 N-cm)

*Tightening torques are calculated with a friction coefficient of μ = 0.14 and develop 90% of ultimate yield strength.

⚠ **WARNING** Refer to Speed and Feed charts for recommended adjustments to speeds and feeds. Refer to page A30: 146 for deep hole drilling guidelines in this section of the catalog. Visit **www.alliedmachine.com/DeepHoleGuidelines** for the most up-to-date information and procedures. Factory technical assistance is available for your specific applications through our Application Engineering Team.

i = Imperial (in)
m = Metric (mm)
Screws sold in quantities of 10.
O-rings sold in packs of 10.

GEN2 T-A® Drill Inserts

Z Series | Diameter Range: 0.437" - 0.510" (11.10 mm - 12.95 mm)

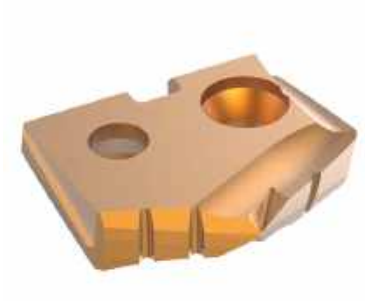

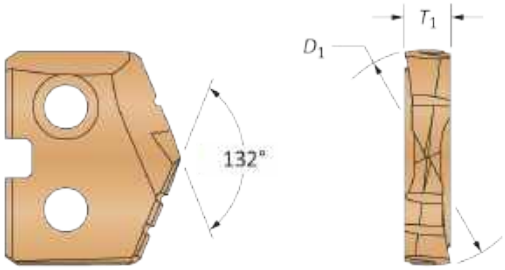

HSS Inserts – Super Cobalt • Carbide Inserts – C2 (K20) | C1 (K35)

Insert				HSS Part No.	Carbide Part No.	
Fractional Equivalent	D_1 inch	D_1 mm	T_1	AM200® Super Cobalt	AM300® C2 (K20)	AM300® C1 (K35)
7/16	0.4375	11.11	3/32	**45ZH-0014**	**4C2ZP-0014**	**4C1ZP-0014**
—	0.4510	11.46	3/32	**45ZH-.451**	**4C2ZP-.451**	**4C1ZP-.451**
—	0.4528	11.50	3/32	**45ZH-11.5**	**4C2ZP-11.5**	**4C1ZP-11.5**
29/64	0.4531	11.51	3/32	**45ZH-.453**	**4C2ZP-.453**	**4C1ZP-.453**
15/32	0.4688	11.91	3/32	**45ZH-0015**	**4C2ZP-0015**	**4C1ZP-0015**
—	0.4724	12.00	3/32	**45ZH-12**	**4C2ZP-12**	**4C1ZP-12**
31/64	0.4844	12.30	3/32	**45ZH-.484**	**4C2ZP-.484**	**4C1ZP-.484**
—	0.4921	12.50	3/32	**45ZH-12.5**	**4C2ZP-12.5**	**4C1ZP-12.5**
1/2	0.5000	12.70	3/32	**45ZH-0016**	**4C2ZP-0016**	**4C1ZP-0016**
—	0.5060	12.85	3/32	**45ZH-.506**	**4C2ZP-.506**	**4C1ZP-.506**
—	0.5100	12.95	3/32	**45ZH-.510**	**4C2ZP-.510**	**4C1ZP-.510**

A30: 112 - 143

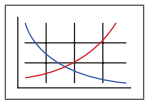

A30: 28 - 31

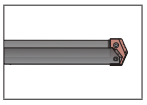

A30: 4 - 6

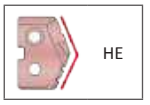

Inserts sold in quantities of 2.

Coatings not listed above can be supplied as nonstocked standards. Process fees apply.

TiN = 45ZT-XXXX	**TiAlN** = 45ZA-XXXX
TiCN = 45ZN-XXXX	**AM200®** = 45ZH-XXXX

T-A® Drill Inserts

Z Series | HSS | Diameter Range: 0.437" - 0.510" (11.10 mm - 12.95 mm)

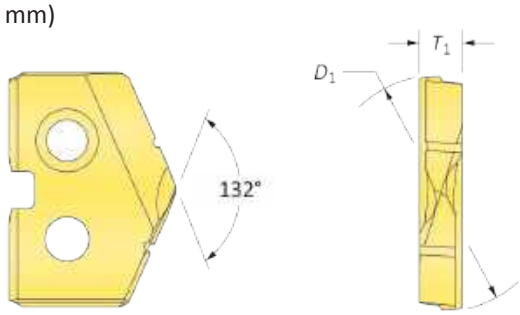

HSS Inserts – Premium Cobalt

Insert				Part No.		
Fractional Equivalent	D_1 inch	D_1 mm	T_1	TiN	TiAlN	TiCN
7/16	0.4375	11.11	3/32	**18ZT-0014**	**18ZA-0014**	**18ZN-0014**
—	0.4510	11.46	3/32	**18ZT-.451**	**18ZA-.451**	**18ZN-.451**
—	0.4528	11.50	3/32	**18ZT-11.5**	**18ZA-11.5**	**18ZN-11.5**
29/64	0.4531	11.51	3/32	**18ZT-.453**	**18ZA-.453**	**18ZN-.453**
15/32	0.4688	11.91	3/32	**18ZT-0015**	**18ZA-0015**	**18ZN-0015**
—	0.4724	12.00	3/32	**18ZT-12**	**18ZA-12**	**18ZN-12**
31/64	0.4844	12.30	3/32	**18ZT-.484**	**18ZA-.484**	**18ZN-.484**
—	0.4921	12.50	3/32	**18ZT-12.5**	**18ZA-12.5**	**18ZN-12.5**
1/2	0.5000	12.70	3/32	**18ZT-0016**	**18ZA-0016**	**18ZN-0016**
—	0.5060	12.85	3/32	**18ZT-.506**	**18ZA-.506**	**18ZN-.506**
—	0.5100	12.95	3/32	**18ZT-.510**	**18ZA-.510**	**18ZN-.510**

A30: 112 - 143
Key on A30: 1

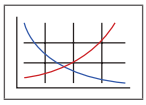

A30: 28 - 31

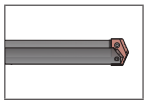

A30: 4 - 6

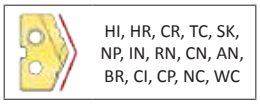

Inserts sold in quantities of 2.

Coatings not listed above can be supplied as nonstocked standards. Process fees apply.

TiN = 18ZT-XXXX	**TiAlN** = 18ZA-XXXX
TiCN = 18ZN-XXXX	**AM200®** = 18ZH-XXXX

T-A® Drill Inserts

Z Series | HSS | Diameter Range: 0.437" - 0.510" (11.10 mm - 12.95 mm)

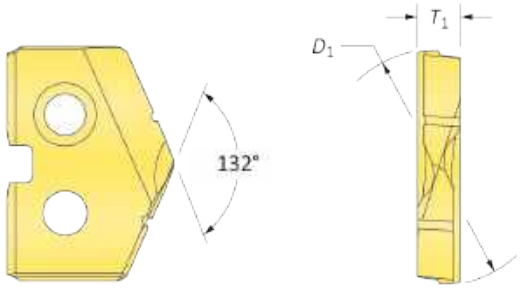

HSS Inserts – Super Cobalt

Insert				Part No.		
Fractional Equivalent	D_1 inch	D_1 mm	T_1	TiN	TiAlN	TiCN
7/16	0.4375	11.11	3/32	**15ZT-0014**	**15ZA-0014**	**15ZN-0014**
—	0.4510	11.46	3/32	**15ZT-.451**	**15ZA-.451**	**15ZN-.451**
—	0.4528	11.50	3/32	**15ZT-11.5**	**15ZA-11.5**	**15ZN-11.5**
29/64	0.4531	11.51	3/32	**15ZT-.453**	**15ZA-.453**	**15ZN-.453**
15/32	0.4688	11.91	3/32	**15ZT-0015**	**15ZA-0015**	**15ZN-0015**
—	0.4724	12.00	3/32	**15ZT-12**	**15ZA-12**	**15ZN-12**
31/64	0.4844	12.30	3/32	**15ZT-.484**	**15ZA-.484**	**15ZN-.484**
—	0.4921	12.50	3/32	**15ZT-12.5**	**15ZA-12.5**	**15ZN-12.5**
1/2	0.5000	12.70	3/32	**15ZT-0016**	**15ZA-0016**	**15ZN-0016**
—	0.5060	12.85	3/32	**15ZT-.506**	**15ZA-.506**	**15ZN-.506**
—	0.5100	12.95	3/32	**15ZT-.510**	**15ZA-.510**	**15ZN-.510**

A30: 112 - 143
Key on A30: 1

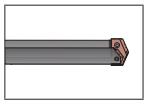

A30: 28 - 31

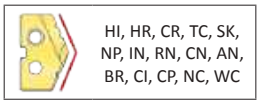

A30: 4 - 6

Inserts sold in quantities of 2.

Coatings not listed above can be supplied as nonstocked standards. Process fees apply.

TiN = 15ZT-XXXX	**TiAlN** = 15ZA-XXXX
TiCN = 15ZN-XXXX	**AM200®** = 15ZH-XXXX

T-A® Drill Inserts

Z Series | HSS | Diameter Range: 0.437" - 0.510" (11.10 mm - 12.95 mm)

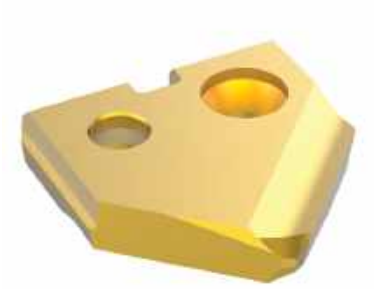

90° Spot & Chamfer

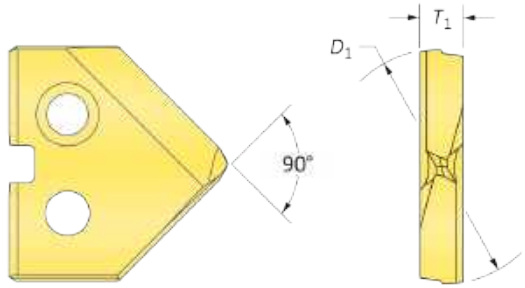

Flat Bottom

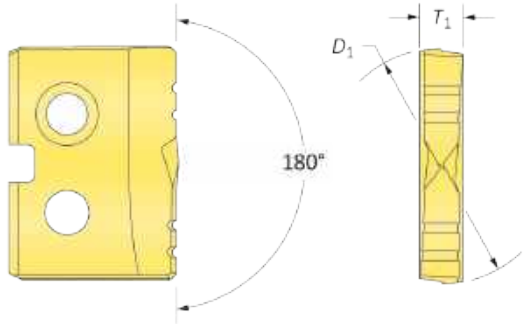

HSS Inserts – Super Cobalt

Insert				90° Spot & Chamfer Part No.			Flat Bottom Part No.
Fractional Equivalent	D_1 inch	D_1 mm	T_1	TiN	TiAlN	TiCN	TiN
7/16	0.4375	11.11	3/32	**15ZT-0014-SP**	**15ZA-0014-SP**	**15ZN-0014-SP**	**15ZT-0014-FB**
—	0.4510	11.46	3/32	**15ZT-.451-SP**	**15ZA-.451-SP**	**15ZN-.451-SP**	**15ZT-.451-FB**
—	0.4528	11.50	3/32	**15ZT-11.5-SP**	**15ZA-11.5-SP**	**15ZN-11.5-SP**	**15ZT-11.5-FB**
29/64	0.4531	11.51	3/32	**15ZT-.453-SP**	**15ZA-.453-SP**	**15ZN-.453-SP**	**15ZT-.453-FB**
15/32	0.4688	11.91	3/32	**15ZT-0015-SP**	**15ZA-0015-SP**	**15ZN-0015-SP**	**15ZT-0015-FB**
—	0.4724	12.00	3/32	**15ZT-12-SP**	**15ZA-12-SP**	**15ZN-12-SP**	**15ZT-12-FB**
31/64	0.4844	12.30	3/32	**15ZT-.484-SP**	**15ZA-.484-SP**	**15ZN-.484-SP**	**15ZT-.484-FB**
—	0.4921	12.50	3/32	**15ZT-12.5-SP**	**15ZA-12.5-SP**	**15ZN-12.5-SP**	**15ZT-12.5-FB**
1/2	0.5000	12.70	3/32	**15ZT-0016-SP**	**15ZA-0016-SP**	**15ZN-0016-SP**	**15ZT-0016-FB**
—	0.5060	12.85	3/32	**15ZT-.506-SP**	**15ZA-.506-SP**	**15ZN-.506-SP**	**15ZT-.506-FB**
—	0.5100	12.95	3/32	**15ZT-.510-SP**	**15ZA-.510-SP**	**15ZN-.510-SP**	**15ZT-.510-FB**

A30: 112 - 143

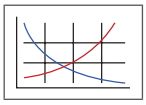

Key on A30: 1

A30: 28 - 31

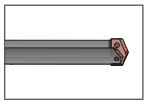

A30: 4 - 6

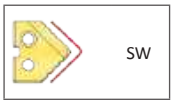

A30: 4 - 6

Inserts sold in quantities of 2.

Coatings not listed above can be supplied as nonstocked standards. Process fees apply.

TiN = 15ZT-XXXX	**TiAlN** = 15ZA-XXXX
TiCN = 15ZN-XXXX	**AM200®** = 15ZH-XXXX

T-A® Drill Inserts

Z Series | Carbide | Diameter Range: 0.437" - 0.510" (11.10 mm - 12.95 mm)

Standard

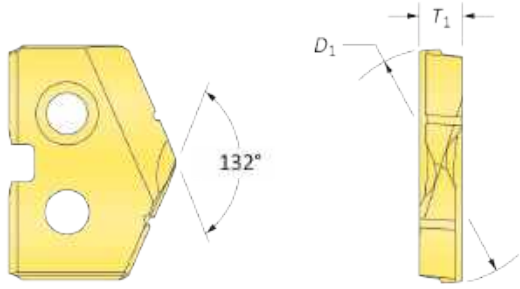

Flat Bottom

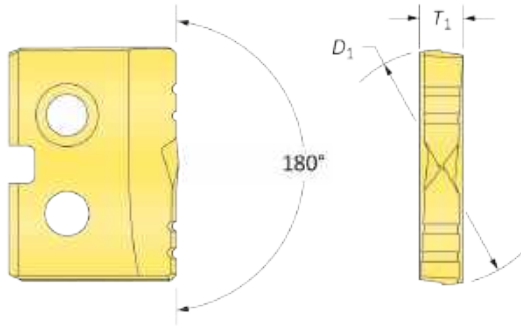

Carbide Inserts – C2 (K20)

Insert				Part No.		Flat Bottom Part No.
Fractional Equivalent	D_1 inch	D_1 mm	T_1	TiN	TiAlN	TiN
7/16	0.4375	11.11	3/32	**1C2ZT-0014**	**1C2ZA-0014**	**1C2ZT-0014-FB**
—	0.4510	11.46	3/32	**1C2ZT-.451**	**1C2ZA-.451**	**1C2ZT-.451-FB**
—	0.4528	11.50	3/32	**1C2ZT-11.5**	**1C2ZA-11.5**	**1C2ZT-11.5-FB**
29/64	0.4531	11.51	3/32	**1C2ZT-.453**	**1C2ZA-.453**	**1C2ZT-.453-FB**
15/32	0.4688	11.91	3/32	**1C2ZT-0015**	**1C2ZA-0015**	**1C2ZT-0015-FB**
—	0.4724	12.00	3/32	**1C2ZT-12**	**1C2ZA-12**	**1C2ZT-12-FB**
31/64	0.4844	12.30	3/32	**1C2ZT-.484**	**1C2ZA-.484**	**1C2ZT-.484-FB**
—	0.4921	12.50	3/32	**1C2ZT-12.5**	**1C2ZA-12.5**	**1C2ZT-12.5-FB**
1/2	0.5000	12.70	3/32	**1C2ZT-0016**	**1C2ZA-0016**	**1C2ZT-0016-FB**
—	0.5060	12.85	3/32	**1C2ZT-.506**	**1C2ZA-.506**	**1C2ZT-.506-FB**
—	0.5100	12.95	3/32	**1C2ZT-.510**	**1C2ZA-.510**	**1C2ZT-.510-FB**

A30: 112 - 143
Key on A30: 1
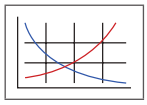

A30: 28 - 31
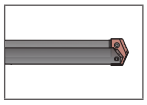

A30: 4 - 6

HI, HR, CR, TC, SK, NP, IN, RN, CN, AN, BR, CI, CP, NC, WC, BT

A30: 4 - 6

FN

Coatings not listed above can be supplied as nonstocked standards. Process fees apply.

Inserts sold in quantities of 2.

TiN = 1C2ZT-XXXX	**TiAlN** = 1C2ZA-XXXX
TiCN = 1C2ZN-XXXX	**AM200®** = 1C2ZH-XXXX

T-A® Drill Inserts

Z Series | Carbide | Diameter Range: 0.437" - 0.510" (11.10 mm - 12.95 mm)

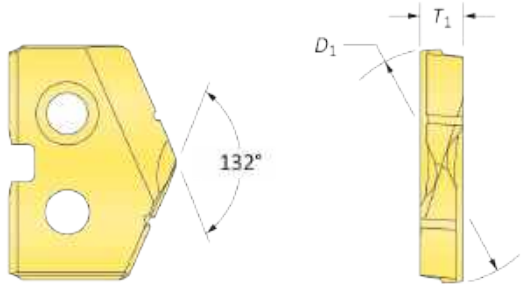

Carbide Inserts – C5 (P40) | C3 (K10) | N2

Insert				C5 Part No.		C3 Part No.	N2 Part No.
Fractional Equivalent	D_1 inch	D_1 mm	T_1	TiN	TiAlN	TiAlN (Cast Iron)	Diamond Film*
7/16	0.4375	11.11	3/32	**1C5ZT-0014**	**1C5ZA-0014**	**1C3ZA-0014-CI**	**1N2ZD-0014**
—	0.4510	11.46	3/32	**1C5ZT-.451**	**1C5ZA-.451**	**1C3ZA-.451-CI**	**1N2ZD-.451**
—	0.4528	11.50	3/32	**1C5ZT-11.5**	**1C5ZA-11.5**	**1C3ZA-11.5-CI**	**1N2ZD-11.5**
29/64	0.4531	11.51	3/32	**1C5ZT-.453**	**1C5ZA-.453**	**1C3ZA-.453-CI**	**1N2ZD-.453**
15/32	0.4688	11.91	3/32	**1C5ZT-0015**	**1C5ZA-0015**	**1C3ZA-0015-CI**	**1N2ZD-0015**
—	0.4724	12.00	3/32	**1C5ZT-12**	**1C5ZA-12**	**1C3ZA-12-CI**	**1N2ZD-12**
31/64	0.4844	12.30	3/32	**1C5ZT-.484**	**1C5ZA-.484**	**1C3ZA-.484-CI**	**1N2ZD-.484**
—	0.4921	12.50	3/32	**1C5ZT-12.5**	**1C5ZA-12.5**	**1C3ZA-12.5-CI**	**1N2ZD-12.5**
1/2	0.5000	12.70	3/32	**1C5ZT-0016**	**1C5ZA-0016**	**1C3ZA-0016-CI**	**1N2ZD-0016**
—	0.5060	12.85	3/32	**1C5ZT-.506**	**1C5ZA-.506**	**1C3ZA-.506-CI**	**1N2ZD-.506**
—	0.5100	12.95	3/32	**1C5ZT-.510**	**1C5ZA-.510**	**1C3ZA-.510-CI**	**1N2ZD-.510**

*Diamond Film is only available in standard geometry. For additional geometries, please contact Application Engineering.

A30: 112 - 143

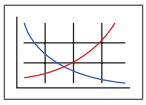

Key on A30: 1

A30: 28 - 31

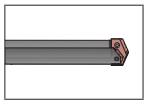

A30: 4 - 6

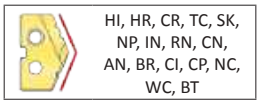

Inserts sold in quantities of 2.

Coatings not listed above can be supplied as nonstocked standards. Process fees apply.

TiN = 1C5ZT-XXXX	**TiAlN** = 1C5ZA-XXXX
TiCN = 1C5ZN-XXXX	**AM200®** = 1C5ZH-XXXX

T-A® Drill Insert Holders

Z Series | Flange Shank | Diameter Range: 0.437" - 0.510" (11.10 mm - 12.95 mm)

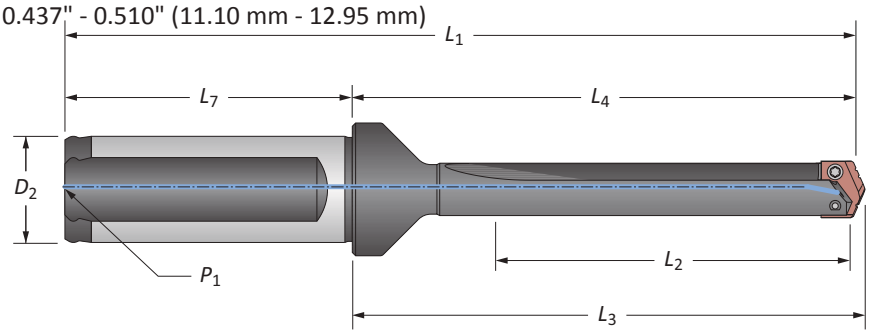

Straight Flute

	Length	Body L_2	Body L_4	Body L_3	Body L_1	Shank D_2	Shank L_7	Shank P_1	Part No.
i	Short	1.142	2.406	2.496	4.436	3/4	2.030	1/8 NPT	**220Z0S-075F**
i	Standard	2.267	3.531	3.621	5.561	3/4	2.030	1/8 NPT	**240Z0S-075F**
i	Extended	4.267	5.531	5.621	7.561	3/4	2.030	1/8 NPT	⚠ **250Z0S-075F**
m	Short	29.1	61.1	63.4	111.1	20	50.0	1/8 BSPT	**220Z0S-20FM**
m	XL	219.6	251.6	253.9	301.6	20	50.0	1/8 BSPT	⚠ **270Z0S-20FM**
m	3XL	287.9	319.9	322.1	369.9	20	50.0	1/8 BSPT	⚠ **290Z0S-20FM**

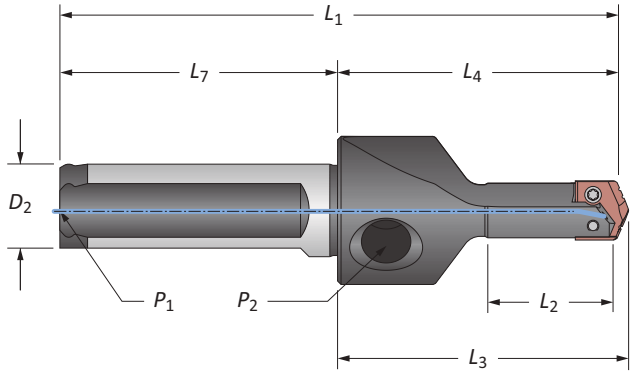

Straight Flute (Stub Length)

	Length	Body L_2	Body L_4	Body L_3	Body L_1	Shank D_2	Shank L_7	Shank P_1	Part No.
i	Stub	0.805	1.797	1.887	3.672	5/8	1.875	1/16 NPT	**210Z0S-063F**
m	Stub	20.4	45.6	47.9	93.6	16	48.0	1/16 BSPT	**210Z0S-16FM**

NOTE: Stub length holders have a 1/8" side pipe tap (P_2).

Connection Accessories

Insert Screws	Nylon Locking Screws	Insert Driver	Preset Torque Hand Driver	Replacement Tips	Admissible Tightening Torque*
7247-IP7-1	7247N-IP7-1	8IP-7	8IP-7TL	8IP-7B	7.4 in-lbs (84 N-cm)

*Tightening torques are calculated with a friction coefficient of μ = 0.14 and develop 90% of ultimate yield strength.

A30: 22 - 27

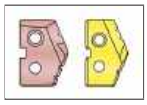

Key on A30: 1

i = Imperial (in)
m = Metric (mm)
Screws sold in quantities of 10.

⚠ **WARNING** Refer to Speed and Feed charts for recommended adjustments to speeds and feeds. Refer to page A30: 146 for deep hole drilling guidelines in this section of the catalog. Visit **www.alliedmachine.com/DeepHoleGuidelines** for the most up-to-date information and procedures. Factory technical assistance is available for your specific applications through our Application Engineering Team.

T-A® Drill Insert Holders

Z Series | Flange Shank | Diameter Range: 0.437" - 0.510" (11.10 mm - 12.95 mm)

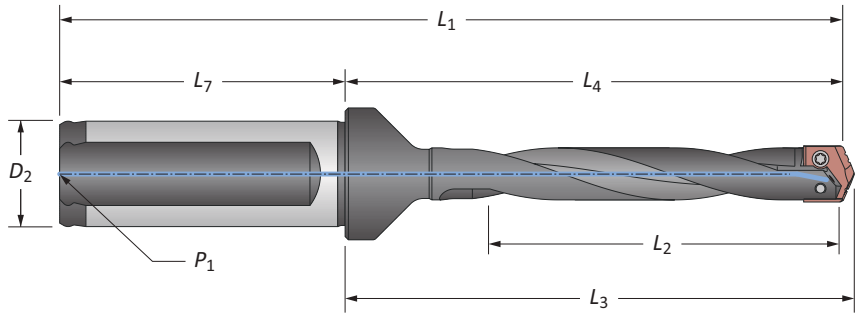

Helical Flute

	Length	Body L_2	Body L_4	Body L_3	Body L_1	Shank D_2	Shank L_7	Shank P_1	Part No.
i	Standard	2.874	3.531	3.621	5.561	3/4	2.030	1/8 NPT	**240Z0H-075F**
i	Standard Plus	3.886	4.543	4.633	6.573	3/4	2.030	1/8 NPT	⚠ **245Z0H-075F**
i	Extended	4.874	5.531	5.621	7.561	3/4	2.030	1/8 NPT	⚠ **250Z0H-075F**
i	Long	7.586	8.244	8.334	10.274	3/4	2.030	1/8 NPT	⚠ **260Z0H-075F**
m	Standard	73.0	89.7	92.0	139.7	20	50.0	1/8 BSPT	**240Z0H-20FM**
m	Standard Plus	98.7	115.4	117.7	165.4	20	50.0	1/8 BSPT	⚠ **245Z0H-20FM**
m	Extended	123.8	140.5	142.8	190.5	20	50.0	1/8 BSPT	⚠ **250Z0H-20FM**
m	Long	192.7	209.4	211.7	259.4	20	50.0	1/8 BSPT	⚠ **260Z0H-20FM**

Connection Accessories

Insert Screws	Nylon Locking Screws	Insert Driver	Preset Torque Hand Driver	Replacement Tips	Admissible Tightening Torque*
7247-IP7-1	7247N-IP7-1	8IP-7	8IP-7TL	8IP-7B	7.4 in-lbs (84 N-cm)

*Tightening torques are calculated with a friction coefficient of μ = 0.14 and develop 90% of ultimate yield strength.

A30: 22 - 27

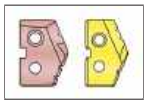

Key on A30: 1

i = Imperial (in)
m = Metric (mm)
Screws sold in quantities of 10.

⚠ **WARNING** Refer to Speed and Feed charts for recommended adjustments to speeds and feeds. Refer to page A30: 146 for deep hole drilling guidelines in this section of the catalog. Visit **www.alliedmachine.com/DeepHoleGuidelines** for the most up-to-date information and procedures. Factory technical assistance is available for your specific applications through our Application Engineering Team.

T-A® Drill Insert Holders

Z Series | Taper Shank | Diameter Range: 0.437" - 0.510" (11.10 mm - 12.95 mm)

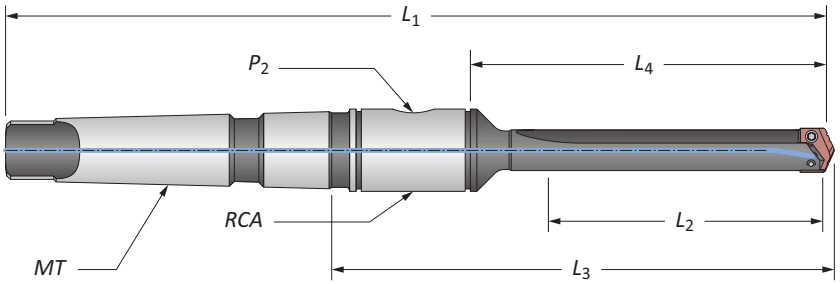

Straight Flute

	Length	Body L_2	Body L_4	Body L_3	Body L_1	Shank MT*	Shank P_2	Shank RCA	Part No.
i	Short	1.074	2.031	3.464	6.312	#2 MT	1/16 NPT	2T-2SR	**220Z0S-002I**
i	Standard	2.199	3.156	4.589	7.437	#2 MT	1/16 NPT	2T-2SR	**240Z0S-002I**
i	Extended	4.199	5.156	6.589	9.437	#2 MT	1/16 NPT	2T-2SR	⚠ **250Z0S-002I**
m	Short	27.3	51.6	88.0	160.3	#2 MT ISO	1/16 BSPT	2T-2SRM	**220Z0S-002M**

*MT ISO 296 type BEK.

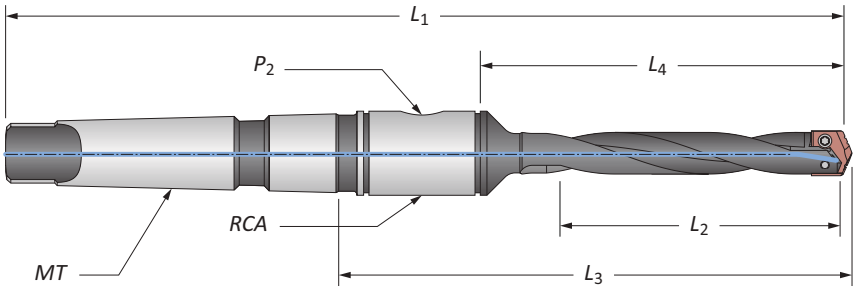

Helical Flute

	Length	Body L_2	Body L_4	Body L_3	Body L_1	Shank MT*	Shank P_2	Shank RCA	Part No.
i	Standard	2.733	3.156	4.589	7.437	#2 MT	1/16 NPT	2T-2SR	**240Z0H-002I**
i	Extended	4.733	5.156	6.589	9.437	#2 MT	1/16 NPT	2T-2SR	⚠ **250Z0H-002I**
m	Standard	69.4	80.2	116.6	188.9	#2 MT ISO	1/16 BSPT	2T-2SRM	**240Z0H-002M**
m	Extended	120.2	131.0	167.4	239.7	#2 MT ISO	1/16 BSPT	2T-2SRM	⚠ **250Z0H-002M**

*MT ISO 296 type BEK.

Connection Accessories

Insert Screws	Nylon Locking Screws	Insert Driver	Preset Torque Hand Driver	Replacement Tips	Admissible Tightening Torque*
7247-IP7-1	7247N-IP7-1	8IP-7	8IP-7TL	8IP-7B	7.4 in-lbs (84 N-cm)

*Tightening torques are calculated with a friction coefficient of μ = 0.14 and develop 90% of ultimate yield strength.

A30: 22 - 27

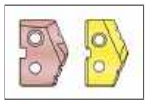

Key on A30: 1

A30: 31 & 110

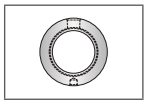

i = Imperial (in)
m = Metric (mm)
Screws sold in quantities of 10.

⚠ **WARNING** Refer to Speed and Feed charts for recommended adjustments to speeds and feeds. Refer to page A30: 146 for deep hole drilling guidelines in this section of the catalog. Visit **www.alliedmachine.com/DeepHoleGuidelines** for the most up-to-date information and procedures. Factory technical assistance is available for your specific applications through our Application Engineering Team.

T-A® Drill Insert Holders

Z Series | Straight Shank | ER Collet | Diameter Range: 0.437" - 0.510" (11.10 mm - 12.95 mm)

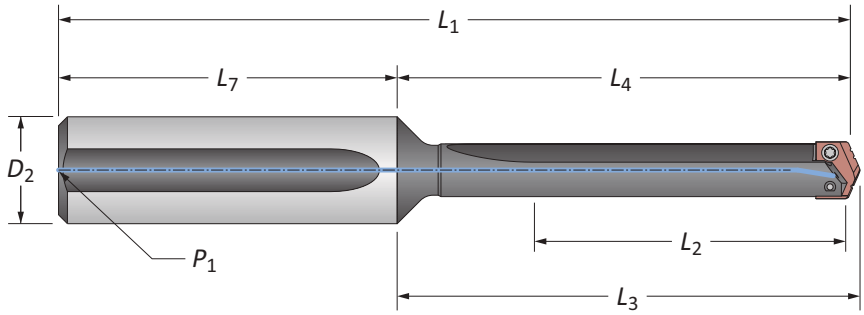

Straight Flute

	Length	Body L_2	Body L_4	Body L_3	Body L_1	Shank D_2	Shank L_7	Shank P_1	Part No.
	Short	1.079	2.031	2.121	4.406	3/4	2.375	1/8 NPT	**220Z0S-075L**
	Standard	2.204	3.156	3.246	5.531	3/4	2.375	1/8 NPT	**240Z0S-075L**
i	Extended	4.204	5.156	5.246	7.531	3/4	2.375	1/8 NPT	⚠ **250Z0S-075L**
	XL	8.579	9.531	9.621	11.906	3/4	2.375	1/8 NPT	⚠ **270Z0S-075L**
	3XL	11.266	12.218	12.308	14.593	3/4	2.375	1/8 NPT	⚠ **290Z0S-075L**

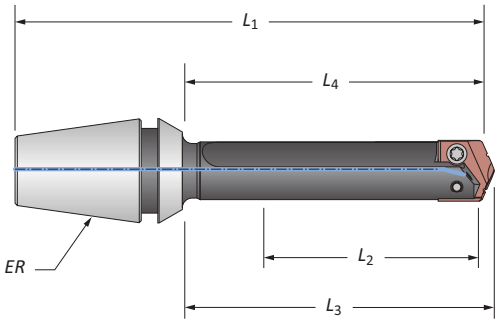

ER Collet Holder

	Body L_2	Body L_4	Body L_3	Body L_1	Body ER	Part No.	Collet Nut without Retaining Ring
m	42.1	48.5	50.8	75.8	ER-16	**210Z0S-16ER**	ER-16N
	42.1	48.5	50.8	79.8	ER-20	**210Z0S-20ER**	ER-20N

T-A Drill Accessories

Z Series | Rotary Coolant Adapters | Torx® Plus Screws

Rotary Coolant Adapter (RCA) and Accessories

	ID	OD	L_1	Driving Rod Thread	P_1	Part No.	RCA O-Rings Kit Part No.*	RCA O-Rings Replacements
i	0.750	1.750	0.875	5/16" - 18	1/8 NPT	⚠ **2T-2SR**	2T1-2SR	2T1-2OR-10
m	19.1	44.5	22.2	M8 x 1.25	1/8 BSPT	⚠ **2T-2SRM**	2T1-2SR	2T1-2OR-10

*RCA Repair Kit includes (2) O-rings, (2) snap rings, and (2) thrust washers.

⚠ Refer to page A30: 110 for proper RCA assembly and safety information.

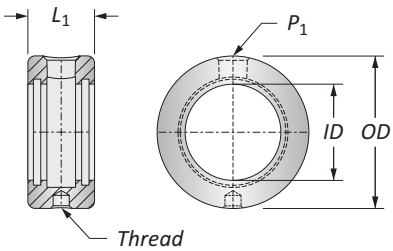

Connection Accessories

Insert Screws	Nylon Locking Screws	Insert Driver	Preset Torque Hand Driver	Replacement Tips	Admissible Tightening Torque*
7247-IP7-1	7247N-IP7-1	8IP-7	8IP-7TL	8IP-7B	7.4 in-lbs (84 N-cm)

*Tightening torques are calculated with a friction coefficient of μ = 0.14 and develop 90% of ultimate yield strength.

⚠ **WARNING** Refer to Speed and Feed charts for recommended adjustments to speeds and feeds. Refer to page A30: 146 for deep hole drilling guidelines in this section of the catalog. Visit **www.alliedmachine.com/DeepHoleGuidelines** for the most up-to-date information and procedures. Factory technical assistance is available for your specific applications through our Application Engineering Team.

i = Imperial (in)
m = Metric (mm)
Screws sold in quantities of 10.
O-rings sold in packs of 10.

GEN2 T-A® Drill Inserts

0 Series | Diameter Range: 0.511" - 0.695" (12.98 mm - 17.65 mm)

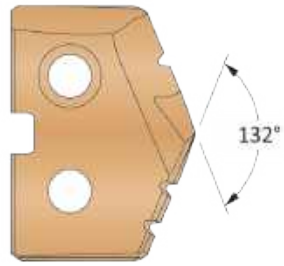

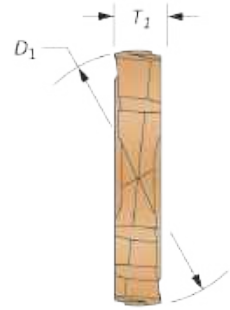

HSS Inserts – Super Cobalt • Carbide Inserts – C2 (K20) | C1 (K35)

Series	Insert: Fractional Equivalent	Insert: D_1 inch	Insert: D_1 mm	Insert: T_1	HSS Part No. AM200® Super Cobalt	Carbide Part No. AM300® C2 (K20)	Carbide Part No. AM300® C1 (K35)
0	—	0.5118	13.00	1/8	**450H-13**	**4C20P-13**	**4C10P-13**
	33/64	0.5156	13.10	1/8	**450H-.515**	**4C20P-.515**	**4C10P-.515**
	17/32	0.5313	13.50	1/8	**450H-0017**	**4C20P-0017**	**4C10P-0017**
	—	0.5315	13.50	1/8	**450H-13.5**	**4C20P-13.5**	**4C10P-13.5**
	35/64	0.5469	13.89	1/8	**450H-.546**	**4C20P-.546**	**4C10P-.546**
	—	0.5512	14.00	1/8	**450H-14**	**4C20P-14**	**4C10P-14**
	9/16	0.5625	14.29	1/8	**450H-0018**	**4C20P-0018**	**4C10P-0018**
	—	0.5709	14.50	1/8	**450H-14.5**	**4C20P-14.5**	**4C10P-14.5**
	37/64	0.5781	14.68	1/8	**450H-.578**	**4C20P-.578**	**4C10P-.578**
	—	0.5906	15.00	1/8	**450H-15**	**4C20P-15**	**4C10P-15**
	19/32	0.5938	15.08	1/8	**450H-0019**	**4C20P-0019**	**4C10P-0019**
0.5	39/64	0.6094	15.48	1/8	**450H-.609**	**4C20P-.609**	**4C10P-.609**
	—	0.6102	15.50	1/8	**450H-15.5**	**4C20P-15.5**	**4C10P-15.5**
	5/8	0.6250	15.88	1/8	**450H-0020**	**4C20P-0020**	**4C10P-0020**
	—	0.6299	16.00	1/8	**450H-16**	**4C20P-16**	**4C10P-16**
	41/64	0.6406	16.27	1/8	**450H-.640**	**4C20P-.640**	**4C10P-.640**
	—	0.6496	16.50	1/8	**450H-16.5**	**4C20P-16.5**	**4C10P-16.5**
	21/32	0.6563	16.67	1/8	**450H-0021**	**4C20P-0021**	**4C10P-0021**
	—	0.6693	17.00	1/8	**450H-17**	**4C20P-17**	**4C10P-17**
	43/64	0.6719	17.07	1/8	**450H-.671**	**4C20P-.671**	**4C10P-.671**
	11/16	0.6875	17.46	1/8	**450H-0022**	**4C20P-0022**	**4C10P-0022**
	—	0.6890	17.50	1/8	**450H-17.5**	**4C20P-17.5**	**4C10P-17.5**

NOTE: 0.5 series inserts fit into both 0 and 0.5 series holders. However, 0 series inserts ONLY fit into 0 series holders. See page A30: 7 for visual.

A30: 112 - 143

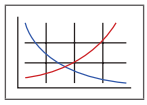

Key on A30: 1

A30: 38 - 42

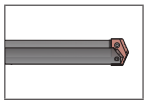

A30: 4 - 6

Inserts sold in quantities of 2.

Coatings not listed above can be supplied as nonstocked standards. Process fees apply.

TiN = 450T-XXXX	**TiAlN** = 450A-XXXX
TiCN = 450N-XXXX	**AM200®** = 450H-XXXX

T-A® Drill Inserts

0 Series | HSS | Diameter Range: 0.511" - 0.695" (12.98 mm - 17.65 mm)

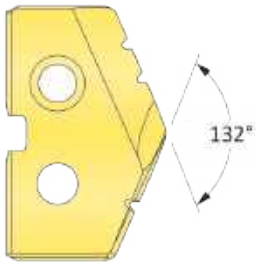

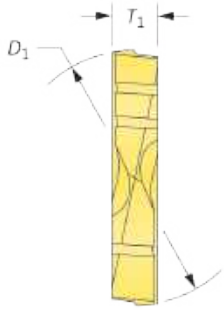

HSS Inserts – Premium Cobalt

Series	Insert				Part No.		
	Fractional Equivalent	D_1 inch	D_1 mm	T_1	TiN	TiAlN	TiCN
0	—	0.5118	13.00	1/8	**180T-13**	**180A-13**	**180N-13**
	33/64	0.5156	13.10	1/8	**180T-.515**	**180A-.515**	**180N-.515**
	17/32	0.5313	13.50	1/8	**180T-0017**	**180A-0017**	**180N-0017**
	—	0.5315	13.50	1/8	**180T-13.5**	**180A-13.5**	**180N-13.5**
	35/64	0.5469	13.89	1/8	**180T-.546**	**180A-.546**	**180N-.546**
	—	0.5512	14.00	1/8	**180T-14**	**180A-14**	**180N-14**
	9/16	0.5625	14.29	1/8	**180T-0018**	**180A-0018**	**180N-0018**
	—	0.5709	14.50	1/8	**180T-14.5**	**180A-14.5**	**180N-14.5**
	37/64	0.5781	14.68	1/8	**180T-.578**	**180A-.578**	**180N-.578**
	—	0.5906	15.00	1/8	**180T-15**	**180A-15**	**180N-15**
	19/32	0.5938	15.08	1/8	**180T-0019**	**180A-0019**	**180N-0019**
0.5	39/64	0.6094	15.48	1/8	**180T-.609**	**180A-.609**	**180N-.609**
	—	0.6102	15.50	1/8	**180T-15.5**	**180A-15.5**	**180N-15.5**
	5/8	0.6250	15.88	1/8	**180T-0020**	**180A-0020**	**180N-0020**
	—	0.6299	16.00	1/8	**180T-16**	**180A-16**	**180N-16**
	41/64	0.6406	16.27	1/8	**180T-.640**	**180A-.640**	**180N-.640**
	—	0.6496	16.50	1/8	**180T-16.5**	**180A-16.5**	**180N-16.5**
	21/32	0.6563	16.67	1/8	**180T-0021**	**180A-0021**	**180N-0021**
	—	0.6693	17.00	1/8	**180T-17**	**180A-17**	**180N-17**
	43/64	0.6719	17.07	1/8	**180T-.671**	**180A-.671**	**180N-.671**
	11/16	0.6875	17.46	1/8	**180T-0022**	**180A-0022**	**180N-0022**
	—	0.6890	17.50	1/8	**180T-17.5**	**180A-17.5**	**180N-17.5**

NOTE: 0.5 series inserts fit into both 0 and 0.5 series holders. However, 0 series inserts ONLY fit into 0 series holders. See page A30: 7 for visual.

A30: 112 - 143

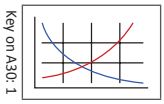

Key on A30: 1

A30: 38 - 42

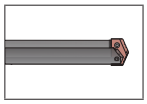

A30: 4 - 6

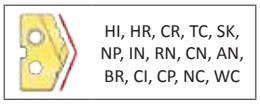

Inserts sold in quantities of 2.

Coatings not listed above can be supplied as nonstocked standards. Process fees apply.

TiN = 180T-XXXX	**TiAlN** = 180A-XXXX
TiCN = 180N-XXXX	**AM200®** = 180H-XXXX

T-A® Drill Inserts

0 Series | HSS | Diameter Range: 0.511" - 0.695" (12.98 mm - 17.65 mm)

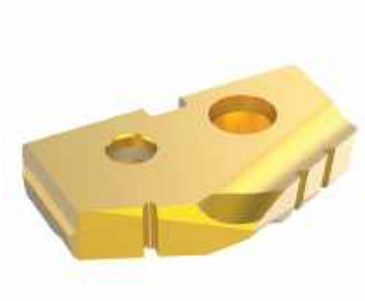

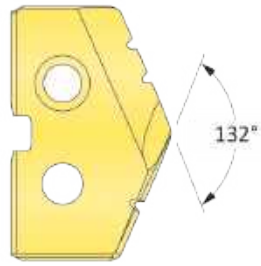

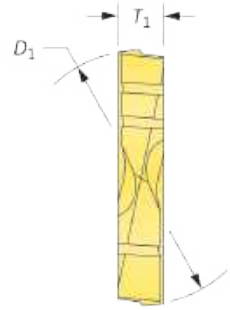

HSS Inserts – Super Cobalt

Series	Insert				Part No.		
	Fractional Equivalent	D_1 inch	D_1 mm	T_1	TiN	TiAlN	TiCN
0	—	0.5118	13.00	1/8	**150T-13**	**150A-13**	**150N-13**
	33/64	0.5156	13.10	1/8	**150T-.515**	**150A-.515**	**150N-.515**
	17/32	0.5313	13.50	1/8	**150T-0017**	**150A-0017**	**150N-0017**
	—	0.5315	13.50	1/8	**150T-13.5**	**150A-13.5**	**150N-13.5**
	35/64	0.5469	13.89	1/8	**150T-.546**	**150A-.546**	**150N-.546**
	—	0.5512	14.00	1/8	**150T-14**	**150A-14**	**150N-14**
	9/16	0.5625	14.29	1/8	**150T-0018**	**150A-0018**	**150N-0018**
	—	0.5709	14.50	1/8	**150T-14.5**	**150A-14.5**	**150N-14.5**
	37/64	0.5781	14.68	1/8	**150T-.578**	**150A-.578**	**150N-.578**
	—	0.5906	15.00	1/8	**150T-15**	**150A-15**	**150N-15**
	19/32	0.5938	15.08	1/8	**150T-0019**	**150A-0019**	**150N-0019**
0.5	39/64	0.6094	15.48	1/8	**150T-.609**	**150A-.609**	**150N-.609**
	—	0.6102	15.50	1/8	**150T-15.5**	**150A-15.5**	**150N-15.5**
	5/8	0.6250	15.88	1/8	**150T-0020**	**150A-0020**	**150N-0020**
	—	0.6299	16.00	1/8	**150T-16**	**150A-16**	**150N-16**
	41/64	0.6406	16.27	1/8	**150T-.640**	**150A-.640**	**150N-.640**
	—	0.6496	16.50	1/8	**150T-16.5**	**150A-16.5**	**150N-16.5**
	21/32	0.6563	16.67	1/8	**150T-0021**	**150A-0021**	**150N-0021**
	—	0.6693	17.00	1/8	**150T-17**	**150A-17**	**150N-17**
	43/64	0.6719	17.07	1/8	**150T-.671**	**150A-.671**	**150N-.671**
	11/16	0.6875	17.46	1/8	**150T-0022**	**150A-0022**	**150N-0022**
	—	0.6890	17.50	1/8	**150T-17.5**	**150A-17.5**	**150N-17.5**

NOTE: 0.5 series inserts fit into both 0 and 0.5 series holders. However, 0 series inserts ONLY fit into 0 series holders. See page A30: 7 for visual.

A30: 112 - 143

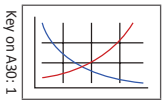

A30: 38 - 42

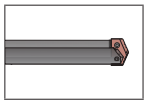

A30: 4 - 6

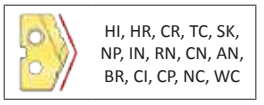

Inserts sold in quantities of 2.

Coatings not listed above can be supplied as nonstocked standards. Process fees apply.

TiN = 150T-XXXX	**TiAlN** = 150A-XXXX
TiCN = 150N-XXXX	**AM200®** = 150H-XXXX

T-A® Drill Inserts

0 Series | HSS | Diameter Range: 0.511" - 0.695" (12.98 mm - 17.65 mm)

90° Spot & Chamfer

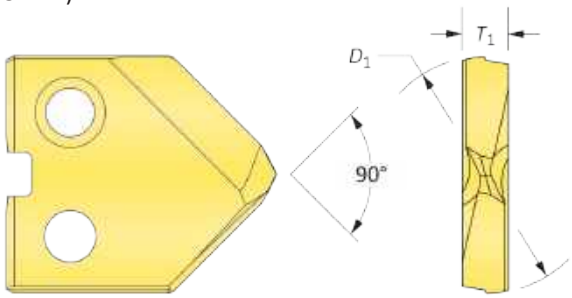

Flat Bottom

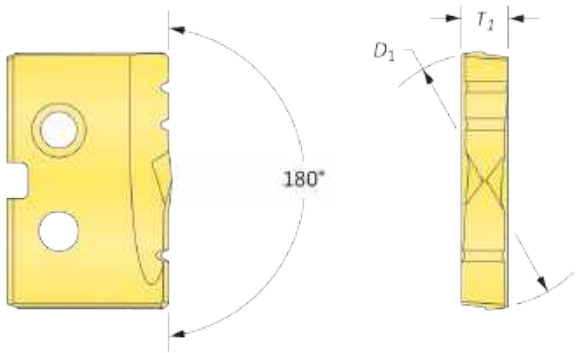

HSS Inserts – Super Cobalt

Series	Insert: Fractional Equivalent	Insert: D_1 inch	Insert: D_1 mm	Insert: T_1	90° Spot & Chamfer Part No.: TiN	90° Spot & Chamfer Part No.: TiAlN	90° Spot & Chamfer Part No.: TiCN	Flat Bottom Part No.: TiN
0	—	0.5118	13.00	1/8	**150T-13-SP**	**150A-13-SP**	**150N-13-SP**	**150T-13-FB**
	33/64	0.5156	13.10	1/8	**150T-.515-SP**	**150A-.515-SP**	**150N-.515-SP**	**150T-.515-FB**
	17/32	0.5313	13.50	1/8	**150T-0017-SP**	**150A-0017-SP**	**150N-0017-SP**	**150T-0017-FB**
	—	0.5315	13.50	1/8	**150T-13.5-SP**	**150A-13.5-SP**	**150N-13.5-SP**	**150T-13.5-FB**
	35/64	0.5469	13.89	1/8	**150T-.546-SP**	**150A-.546-SP**	**150N-.546-SP**	**150T-.546-FB**
	—	0.5512	14.00	1/8	**150T-14-SP**	**150A-14-SP**	**150N-14-SP**	**150T-14-FB**
	9/16	0.5625	14.29	1/8	**150T-0018-SP**	**150A-0018-SP**	**150N-0018-SP**	**150T-0018-FB**
	—	0.5709	14.50	1/8	**150T-14.5-SP**	**150A-14.5-SP**	**150N-14.5-SP**	**150T-14.5-FB**
	37/64	0.5781	14.68	1/8	**150T-.578-SP**	**150A-.578-SP**	**150N-.578-SP**	**150T-.578-FB**
	—	0.5906	15.00	1/8	**150T-15-SP**	**150A-15-SP**	**150N-15-SP**	**150T-15-FB**
	19/32	0.5938	15.08	1/8	**150T-0019-SP**	**150A-0019-SP**	**150N-0019-SP**	**150T-0019-FB**
0.5	39/64	0.6094	15.48	1/8	**150T-.609-SP**	**150A-.609-SP**	**150N-.609-SP**	**150T-.609-FB**
	—	0.6102	15.50	1/8	**150T-15.5-SP**	**150A-15.5-SP**	**150N-15.5-SP**	**150T-15.5-FB**
	5/8	0.6250	15.88	1/8	**150T-0020-SP**	**150A-0020-SP**	**150N-0020-SP**	**150T-0020-FB**
	—	0.6299	16.00	1/8	**150T-16-SP**	**150A-16-SP**	**150N-16-SP**	**150T-16-FB**
	41/64	0.6406	16.27	1/8	**150T-.640-SP**	**150A-.640-SP**	**150N-.640-SP**	**150T-.640-FB**
	—	0.6496	16.50	1/8	**150T-16.5-SP**	**150A-16.5-SP**	**150N-16.5-SP**	**150T-16.5-FB**
	21/32	0.6563	16.67	1/8	**150T-0021-SP**	**150A-0021-SP**	**150N-0021-SP**	**150T-0021-FB**
	—	0.6693	17.00	1/8	**150T-17-SP**	**150A-17-SP**	**150N-17-SP**	**150T-17-FB**
	43/64	0.6719	17.07	1/8	**150T-.671-SP**	**150A-.671-SP**	**150N-.671-SP**	**150T-.671-FB**
	11/16	0.6875	17.46	1/8	**150T-0022-SP**	**150A-0022-SP**	**150N-0022-SP**	**150T-0022-FB**
	—	0.6890	17.50	1/8	**150T-17.5-SP**	**150A-17.5-SP**	**150N-17.5-SP**	**150T-17.5-FB**

NOTE: 0.5 series inserts fit into both 0 and 0.5 series holders. However, 0 series inserts ONLY fit into 0 series holders. See page A30: 7 for visual.

A30: 112 - 143

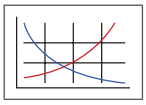

Key on A30: 1

A30: 38 - 42

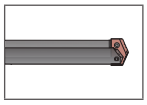

A30: 4 - 6

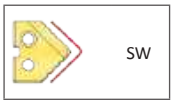

SW

A30: 4 - 6

FN

Inserts sold in quantities of 2.

Coatings not listed above can be supplied as nonstocked standards. Process fees apply.

TiN = 150T-XXXX	**TiAlN** = 150A-XXXX
TiCN = 150N-XXXX	**AM200®** = 150H-XXXX

T-A® Drill Inserts

0 Series | Carbide | Diameter Range: 0.511" - 0.695" (12.98 mm - 17.65 mm)

Standard

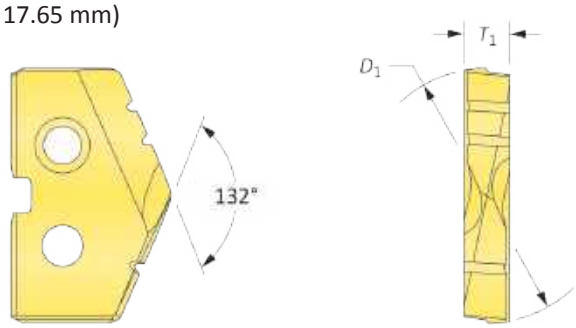

Flat Bottom

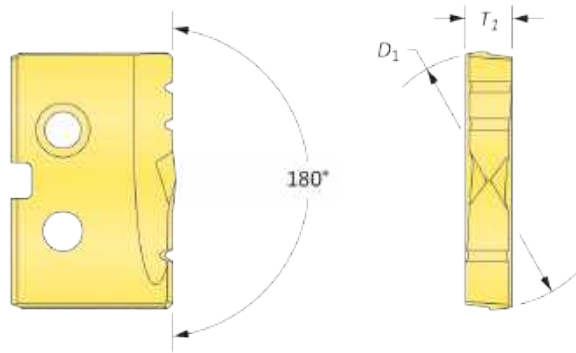

Carbide Inserts – C2 (K20)

Series	Insert: Fractional Equivalent	Insert: D_1 inch	Insert: D_1 mm	Insert: T_1	Part No. TiN	Part No. TiAlN	Flat Bottom Part No. TiN
0	—	0.5118	13.00	1/8	**1C20T-13**	**1C20A-13**	**1C20T-13-FB**
	33/64	0.5156	13.10	1/8	**1C20T-.515**	**1C20A-.515**	**1C20T-.515-FB**
	17/32	0.5313	13.50	1/8	**1C20T-0017**	**1C20A-0017**	**1C20T-0017-FB**
	—	0.5315	13.50	1/8	**1C20T-13.5**	**1C20A-13.5**	**1C20T-13.5-FB**
	35/64	0.5469	13.89	1/8	**1C20T-.546**	**1C20A-.546**	**1C20T-.546-FB**
	—	0.5512	14.00	1/8	**1C20T-14**	**1C20A-14**	**1C20T-14-FB**
	9/16	0.5625	14.29	1/8	**1C20T-0018**	**1C20A-0018**	**1C20T-0018-FB**
	—	0.5709	14.50	1/8	**1C20T-14.5**	**1C20A-14.5**	**1C20T-14.5-FB**
	37/64	0.5781	14.68	1/8	**1C20T-.578**	**1C20A-.578**	**1C20T-.578-FB**
	—	0.5906	15.00	1/8	**1C20T-15**	**1C20A-15**	**1C20T-15-FB**
	19/32	0.5938	15.08	1/8	**1C20T-0019**	**1C20A-0019**	**1C20T-0019-FB**
0.5	39/64	0.6094	15.48	1/8	**1C20T-.609**	**1C20A-.609**	**1C20T-.609-FB**
	—	0.6102	15.50	1/8	**1C20T-15.5**	**1C20A-15.5**	**1C20T-15.5-FB**
	5/8	0.6250	15.88	1/8	**1C20T-0020**	**1C20A-0020**	**1C20T-0020-FB**
	—	0.6299	16.00	1/8	**1C20T-16**	**1C20A-16**	**1C20T-16-FB**
	41/64	0.6406	16.27	1/8	**1C20T-.640**	**1C20A-.640**	**1C20T-.640-FB**
	—	0.6496	16.50	1/8	**1C20T-16.5**	**1C20A-16.5**	**1C20T-16.5-FB**
	21/32	0.6563	16.67	1/8	**1C20T-0021**	**1C20A-0021**	**1C20T-0021-FB**
	—	0.6693	17.00	1/8	**1C20T-17**	**1C20A-17**	**1C20T-17-FB**
	43/64	0.6719	17.07	1/8	**1C20T-.671**	**1C20A-.671**	**1C20T-.671-FB**
	11/16	0.6875	17.46	1/8	**1C20T-0022**	**1C20A-0022**	**1C20T-0022-FB**
	—	0.6890	17.50	1/8	**1C20T-17.5**	**1C20A-17.5**	**1C20T-17.5-FB**

NOTE: 0.5 series inserts fit into both 0 and 0.5 series holders. However, 0 series inserts ONLY fit into 0 series holders. See page A30: 7 for visual.

A30: 112 - 143

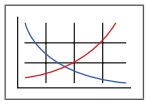

Key on A30: 1

A30: 38 - 42

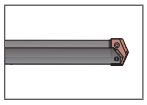

A30: 4 - 6

HI, HR, CR, TC, SK, NP, IN, RN, CN, AN, BR, CI, CP, NC, WC, BT

A30: 4 - 6

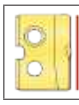

FN

Coatings not listed above can be supplied as nonstocked standards. Process fees apply.

Inserts sold in quantities of 2.

TiN = 1C20T-XXXX	**TiAlN** = 1C20A-XXXX
TiCN = 1C20N-XXXX	**AM200®** = 1C20H-XXXX

T-A® Drill Inserts

0 Series | Carbide | Diameter Range: 0.511" - 0.695" (12.98 mm - 17.65 mm)

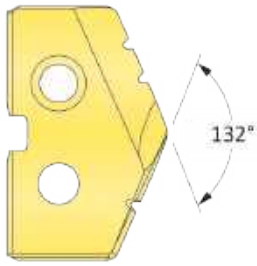

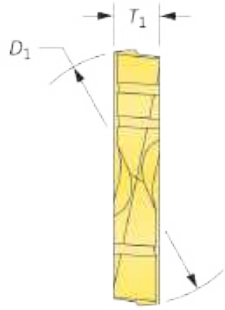

Carbide Inserts – C5 (P40) | C3 (K10) | N2

Series	Insert: Fractional Equivalent	Insert: D_1 inch	Insert: D_1 mm	Insert: T_1	C5 Part No. TiN	C5 Part No. TiAlN	C3 Part No. TiAlN (Cast Iron)	N2 Part No. Diamond Film*
0	—	0.5118	13.00	1/8	**1C50T-13**	**1C50A-13**	**1C30A-13-CI**	**1N20D-13**
	33/64	0.5156	13.10	1/8	**1C50T-.515**	**1C50A-.515**	**1C30A-.515-CI**	**1N20D-.515**
	17/32	0.5313	13.50	1/8	**1C50T-0017**	**1C50A-0017**	**1C30A-0017-CI**	**1N20D-0017**
	—	0.5315	13.50	1/8	**1C50T-13.5**	**1C50A-13.5**	**1C30A-13.5-CI**	**1N20D-13.5**
	35/64	0.5469	13.89	1/8	**1C50T-.546**	**1C50A-.546**	**1C30A-.546-CI**	**1N20D-.546**
	—	0.5512	14.00	1/8	**1C50T-14**	**1C50A-14**	**1C30A-14-CI**	**1N20D-14**
	9/16	0.5625	14.29	1/8	**1C50T-0018**	**1C50A-0018**	**1C30A-0018-CI**	**1N20D-0018**
	—	0.5709	14.50	1/8	**1C50T-14.5**	**1C50A-14.5**	**1C30A-14.5-CI**	**1N20D-14.5**
	37/64	0.5781	14.68	1/8	**1C50T-.578**	**1C50A-.578**	**1C30A-.578-CI**	**1N20D-.578**
	—	0.5906	15.00	1/8	**1C50T-15**	**1C50A-15**	**1C30A-15-CI**	**1N20D-15**
	19/32	0.5938	15.08	1/8	**1C50T-0019**	**1C50A-0019**	**1C30A-0019-CI**	**1N20D-0019**
0.5	39/64	0.6094	15.48	1/8	**1C50T-.609**	**1C50A-.609**	**1C30A-.609-CI**	**1N20D-.609**
	—	0.6102	15.50	1/8	**1C50T-15.5**	**1C50A-15.5**	**1C30A-15.5-CI**	**1N20D-15.5**
	5/8	0.6250	15.88	1/8	**1C50T-0020**	**1C50A-0020**	**1C30A-0020-CI**	**1N20D-0020**
	—	0.6299	16.00	1/8	**1C50T-16**	**1C50A-16**	**1C30A-16-CI**	**1N20D-16**
	41/64	0.6406	16.27	1/8	**1C50T-.640**	**1C50A-.640**	**1C30A-.640-CI**	**1N20D-.640**
	—	0.6496	16.50	1/8	**1C50T-16.5**	**1C50A-16.5**	**1C30A-16.5-CI**	**1N20D-16.5**
	21/32	0.6563	16.67	1/8	**1C50T-0021**	**1C50A-0021**	**1C30A-0021-CI**	**1N20D-0021**
	—	0.6693	17.00	1/8	**1C50T-17**	**1C50A-17**	**1C30A-17-CI**	**1N20D-17**
	43/64	0.6719	17.07	1/8	**1C50T-.671**	**1C50A-.671**	**1C30A-.671-CI**	**1N20D-.671**
	11/16	0.6875	17.46	1/8	**1C50T-0022**	**1C50A-0022**	**1C30A-0022-CI**	**1N20D-0022**
	—	0.6890	17.50	1/8	**1C50T-17.5**	**1C50A-17.5**	**1C30A-17.5-CI**	**1N20D-17.5**

NOTE: 0.5 series inserts fit into both 0 and 0.5 series holders. However, 0 series inserts ONLY fit into 0 series holders. See page A30: 7 for visual.
*Diamond Film is only available in standard geometry. For additional geometries, please contact Application Engineering.

A30: 112 - 143

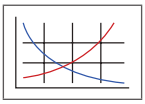

Key on A30: 1

A30: 38 - 42

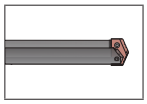

A30: 4 - 6

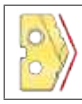

HI, HR, CR, TC, SK, NP, IN, RN, CN, AN, BR, CI, CP, NC, WC, BT

Inserts sold in quantities of 2.

Coatings not listed above can be supplied as nonstocked standards. Process fees apply.

TiN = 1C50T-XXXX	**TiAlN** = 1C50A-XXXX
TiCN = 1C50N-XXXX	**AM200®** = 1C50H-XXXX

T-A® Drill Insert Holders

0 Series | Flange Shank | Diameter Range: 0.511" - 0.695" (12.98 mm - 17.65 mm)

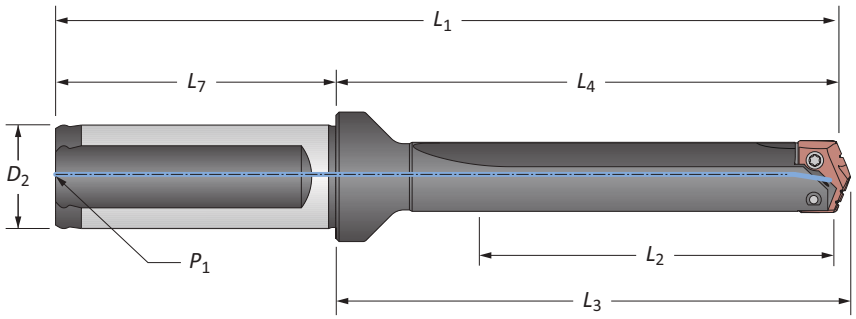

Stub Length

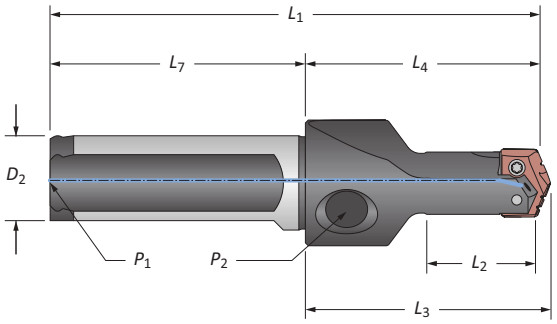

Straight Flute

	Series	Length	Body L_2	Body L_4	Body L_3	Body L_1	Shank D_2	Shank L_7	Shank P_1	Part No.
i	0	Stub	0.910	1.875	1.982	3.905	3/4	2.030	1/8 NPT	**21000S-075F**
		Short	1.220	2.500	2.607	4.530	3/4	2.030	1/8 NPT	**22000S-075F**
		Standard	2.345	3.625	3.732	5.655	3/4	2.030	1/8 NPT	**24000S-075F**
		Extended	4.345	5.625	5.732	7.655	3/4	2.030	1/8 NPT	⚠ **25000S-075F**
	0.5	Stub	0.945	1.875	1.982	3.905	3/4	2.030	1/8 NPT	**21005S-075F**
		Short	1.195	2.500	2.607	4.530	3/4	2.030	1/8 NPT	**22005S-075F**
		Standard	2.320	3.625	3.732	5.655	3/4	2.030	1/8 NPT	**24005S-075F**
		Extended	4.320	5.625	5.732	7.655	3/4	2.030	1/8 NPT	⚠ **25005S-075F**
m	0	Stub	23.1	47.6	50.3	97.6	20	50.0	1/8 BSPT	**21000S-20FM**
		Short	30.9	63.5	66.2	113.5	20	50.0	1/8 BSPT	**22000S-20FM**
		XL	291.3	323.9	326.6	373.9	20	50.0	1/8 BSPT	⚠ **27000S-20FM**
		3XL	383.3	415.9	418.6	465.9	20	50.0	1/8 BSPT	⚠ **29000S-20FM**
	0.5	Stub	24.0	47.6	50.3	97.6	20	50.0	1/8 BSPT	**21005S-20FM**
		Short	29.6	63.5	66.2	113.5	20	50.0	1/8 BSPT	**22005S-20FM**

NOTE: Stub length holders have a 1/8" side pipe tap (P_2).
NOTE: 0.5 series inserts fit into both 0 and 0.5 series holders. However, 0 series inserts ONLY fit into 0 series holders. See page A30: 7 for visual.

Connection Accessories

Series	Insert Screws	Nylon Locking Screws	Insert Driver	Preset Torque Hand Driver	Replacement Tips	Admissible Tightening Torque*
0	72556-IP8-1	72556N-IP8-1	8IP-8	8IP-8TL	8IP-8B	15.5 in-lbs (175 N-cm)
0.5	72567-IP8-1	72567N-IP8-1	8IP-8	8IP-8TL	8IP-8B	15.5 in-lbs (175 N-cm)

*Tightening torques are calculated with a friction coefficient of μ = 0.14 and develop 90% of ultimate yield strength.

A30: 32 - 37

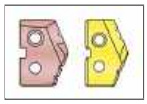

Key on A30: 1

A30: 43 & 111

i = Imperial (in)
m = Metric (mm)
Screws sold in quantities of 10.

⚠ **WARNING** Refer to Speed and Feed charts for recommended adjustments to speeds and feeds. Refer to page A30: 146 for deep hole drilling guidelines in this section of the catalog. Visit **www.alliedmachine.com/DeepHoleGuidelines** for the most up-to-date information and procedures. Factory technical assistance is available for your specific applications through our Application Engineering Team.

T-A® Drill Insert Holders

0 Series | Flange Shank | Diameter Range: 0.511" - 0.695" (12.98 mm - 17.65 mm)

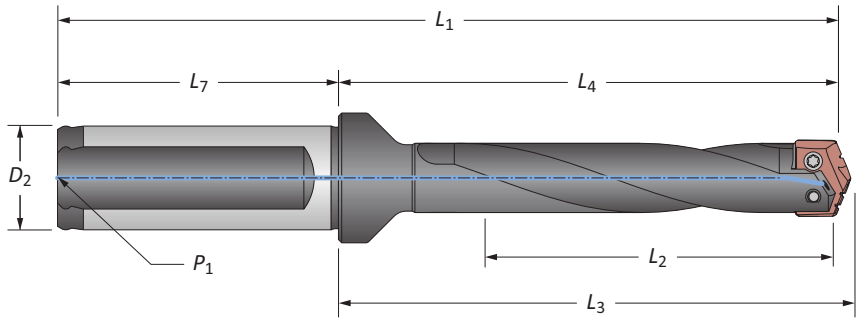

Helical Flute

	Series	Length	Body L_2	Body L_4	Body L_3	Body L_1	Shank D_2	Shank L_7	Shank P_1	Part No.
i	0	Standard	2.987	3.625	3.732	5.655	3/4	2.030	1/8 NPT	24000H-075F
		Standard Plus	3.992	4.630	4.737	6.660	3/4	2.030	1/8 NPT	⚠ 24500H-075F
		Extended	4.987	5.625	5.732	7.655	3/4	2.030	1/8 NPT	⚠ 25000H-075F
		Long	7.487	8.125	8.232	10.155	3/4	2.030	1/8 NPT	⚠ 26000H-075F
		Long Plus	9.937	10.575	10.682	12.605	3/4	2.030	1/8 NPT	⚠ 26500H-075F
	0.5	Standard	3.034	3.625	3.732	5.655	3/4	2.030	1/8 NPT	24005H-075F
		Extended	5.034	5.625	5.732	7.655	3/4	2.030	1/8 NPT	⚠ 25005H-075F
		Long	7.534	8.125	8.232	10.155	3/4	2.030	1/8 NPT	⚠ 26005H-075F
m	0	Standard	75.9	92.1	94.8	142.1	20	50.0	1/8 BSPT	24000H-20FM
		Standard Plus	101.4	117.6	120.3	167.6	20	50.0	1/8 BSPT	⚠ 24500H-20FM
		Extended	126.7	142.9	145.6	192.9	20	50.0	1/8 BSPT	⚠ 25000H-20FM
		Long	190.2	206.4	209.1	256.4	20	50.0	1/8 BSPT	⚠ 26000H-20FM
		Long Plus	252.4	268.6	271.3	318.6	20	50.0	1/8 BSPT	⚠ 26500H-20FM
	0.5	Standard	77.1	92.1	94.8	142.1	20	50.0	1/8 BSPT	24005H-20FM
		Extended	127.9	142.9	145.6	192.9	20	50.0	1/8 BSPT	⚠ 25005H-20FM
		Long	191.4	206.4	209.1	256.4	20	50.0	1/8 BSPT	⚠ 26005H-20FM

NOTE: 0.5 series inserts fit into both 0 and 0.5 series holders. However, 0 series inserts ONLY fit into 0 series holders. See page A30: 7 for visual.

Connection Accessories

Series	Insert Screws	Nylon Locking Screws	Insert Driver	Preset Torque Hand Driver	Replacement Tips	Admissible Tightening Torque*
0	72556-IP8-1	72556N-IP8-1	8IP-8	8IP-8TL	8IP-8B	15.5 in-lbs (175 N-cm)
0.5	72567-IP8-1	72567N-IP8-1	8IP-8	8IP-8TL	8IP-8B	15.5 in-lbs (175 N-cm)

*Tightening torques are calculated with a friction coefficient of μ = 0.14 and develop 90% of ultimate yield strength.

A30: 32 - 37

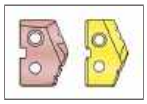

Key on A30: 1

i = Imperial (in)
m = Metric (mm)
Screws sold in quantities of 10.

⚠ WARNING Refer to Speed and Feed charts for recommended adjustments to speeds and feeds. Refer to page A30: 146 for deep hole drilling guidelines in this section of the catalog. Visit **www.alliedmachine.com/DeepHoleGuidelines** for the most up-to-date information and procedures. Factory technical assistance is available for your specific applications through our Application Engineering Team.

T-A Drill Insert Holders

0 Series | Taper Shank | Diameter Range: 0.511" - 0.695" (12.98 mm - 17.65 mm)

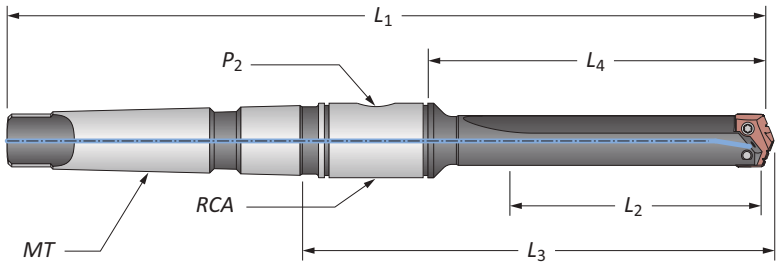

Straight Flute

	Series	Length	Body L_2	Body L_4	Body L_3	Body L_1	Shank MT*	Shank P_2	Shank RCA	Part No.
i	0	Short	1.213	2.188	3.638	6.469	#2 MT	1/16 NPT	2T-2SR	**22000S-002I**
		Standard	2.338	3.313	4.763	7.594	#2 MT	1/16 NPT	2T-2SR	**24000S-002I**
		Extended	4.338	5.313	6.763	9.594	#2 MT	1/16 NPT	2T-2SR	⚠ **25000S-002I**
	0.5	Short	1.188	2.188	3.638	6.469	#2 MT	1/16 NPT	2T-2SR	**22005S-002I**
		Standard	2.313	3.313	4.763	7.594	#2 MT	1/16 NPT	2T-2SR	**24005S-002I**
		Extended	4.313	5.313	6.763	9.594	#2 MT	1/16 NPT	2T-2SR	⚠ **25005S-002I**
m	0	Short	30.8	55.6	92.4	164.3	#2 MT ISO	1/16 BSPT	2T-2SRM	**22000S-002M**
	0.5	Short	30.2	55.6	92.4	164.3	#2 MT ISO	1/16 BSPT	2T-2SRM	**22005S-002M**

*MT ISO 296 type BEK.

NOTE: 0.5 series inserts fit into both 0 and 0.5 series holders. However, 0 series inserts ONLY fit into 0 series holders. See page A30: 7 for visual.

Connection Accessories

Series	Insert Screws	Nylon Locking Screws	Insert Driver	Preset Torque Hand Driver	Replacement Tips	Admissible Tightening Torque*
0	72556-IP8-1	72556N-IP8-1	8IP-8	8IP-8TL	8IP-8B	15.5 in-lbs (175 N-cm)
0.5	72567-IP8-1	72567N-IP8-1	8IP-8	8IP-8TL	8IP-8B	15.5 in-lbs (175 N-cm)

*Tightening torques are calculated with a friction coefficient of μ = 0.14 and develop 90% of ultimate yield strength.

A30: 32 - 37

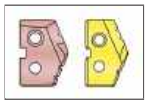

Key on A30: 1

A30: 43 & 110

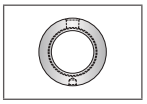

A30: 43 & 111

i = Imperial (in)
m = Metric (mm)
Screws sold in quantities of 10.

⚠ **WARNING** Refer to Speed and Feed charts for recommended adjustments to speeds and feeds. Refer to page A30: 146 for deep hole drilling guidelines in this section of the catalog. Visit **www.alliedmachine.com/DeepHoleGuidelines** for the most up-to-date information and procedures. Factory technical assistance is available for your specific applications through our Application Engineering Team.

T-A Drill Insert Holders

0 Series | Taper Shank | Diameter Range: 0.511" - 0.695" (12.98 mm - 17.65 mm)

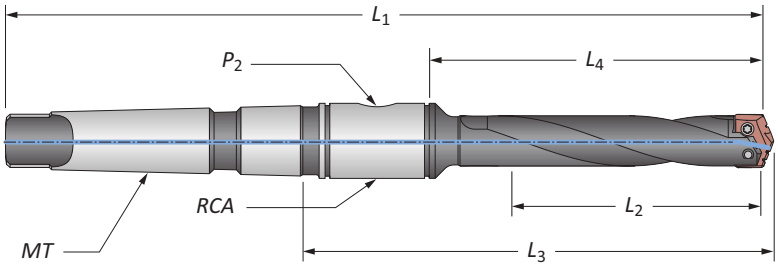

Helical Flute

	Series	Length	Body L_2	Body L_4	Body L_3	Body L_1	Shank MT*	Shank P_2	Shank RCA	Part No.
i	0	Standard	2.909	3.313	4.763	7.594	#2 MT	1/16 NPT	2T-2SR	24000H-002I
		Extended	4.909	5.313	6.763	9.594	#2 MT	1/16 NPT	2T-2SR	⚠ 25000H-002I
		Long	7.409	7.813	9.263	12.094	#2 MT	1/16 NPT	2T-2SR	⚠ 26000H-002I
	0.5	Standard	2.956	3.313	4.763	7.594	#2 MT	1/16 NPT	2T-2SR	24005H-002I
		Extended	4.956	5.313	6.763	9.594	#2 MT	1/16 NPT	2T-2SR	⚠ 25005H-002I
		Long	7.456	7.813	9.263	12.094	#2 MT	1/16 NPT	2T-2SR	⚠ 26005H-002I
m	0	Standard	73.9	84.2	121.0	192.9	#2 MT ISO	1/16 BSPT	2T-2SRM	24000H-002M
		Extended	124.7	135.0	171.8	243.7	#2 MT ISO	1/16 BSPT	2T-2SRM	⚠ 25000H-002M
		Long	188.2	198.5	235.3	307.2	#2 MT ISO	1/16 BSPT	2T-2SRM	⚠ 26000H-002M
	0.5	Standard	75.1	84.2	121.0	192.9	#2 MT ISO	1/16 BSPT	2T-2SRM	24005H-002M
		Extended	125.9	135.0	171.8	243.7	#2 MT ISO	1/16 BSPT	2T-2SRM	⚠ 25005H-002M
		Long	189.4	198.5	235.3	307.2	#2 MT ISO	1/16 BSPT	2T-2SRM	⚠ 26005H-002M

*MT ISO 296 type BEK.

NOTE: 0.5 series inserts fit into both 0 and 0.5 series holders. However, 0 series inserts ONLY fit into 0 series holders. See page A30: 7 for visual.

Connection Accessories

Series	Insert Screws	Nylon Locking Screws	Insert Driver	Preset Torque Hand Driver	Replacement Tips	Admissible Tightening Torque*
0	72556-IP8-1	72556N-IP8-1	8IP-8	8IP-8TL	8IP-8B	15.5 in-lbs (175 N-cm)
0.5	72567-IP8-1	72567N-IP8-1	8IP-8	8IP-8TL	8IP-8B	15.5 in-lbs (175 N-cm)

*Tightening torques are calculated with a friction coefficient of μ = 0.14 and develop 90% of ultimate yield strength.

A30: 32 - 37

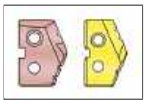

Key on A30: 1

A30: 43 & 110

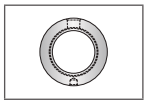

i = Imperial (in)
m = Metric (mm)
Screws sold in quantities of 10.

⚠ WARNING Refer to Speed and Feed charts for recommended adjustments to speeds and feeds. Refer to page A30: 146 for deep hole drilling guidelines in this section of the catalog. Visit **www.alliedmachine.com/DeepHoleGuidelines** for the most up-to-date information and procedures. Factory technical assistance is available for your specific applications through our Application Engineering Team.

T-A® Drill Insert Holders

0 Series | Straight Shank | ER Collet | Diameter Range: 0.511" - 0.695" (12.98 mm - 17.65 mm)

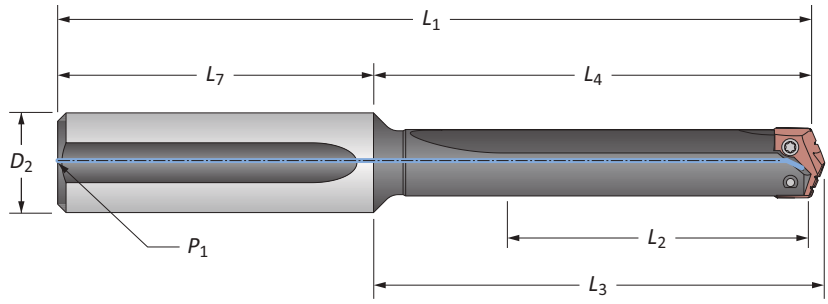

Straight Flute

Series	Length	Body L_2	Body L_4	Body L_3	Body L_1	Shank D_2	Shank L_7	Shank P_1	Part No.
0	Short	1.218	2.188	2.295	4.563	3/4	2.375	1/8 NPT	**22000S-075L**
0	Standard	2.343	3.313	3.420	5.688	3/4	2.375	1/8 NPT	**24000S-075L**
0	Extended	4.343	5.313	5.420	7.688	3/4	2.375	1/8 NPT	⚠ **25000S-075L**
0	Long	6.843	7.813	7.920	10.188	3/4	2.375	1/8 NPT	⚠ **26000S-075L**
0	XL	11.468	12.438	12.545	14.813	3/4	2.375	1/8 NPT	⚠ **27000S-075L**
0	3XL	15.093	16.063	16.170	18.438	3/4	2.375	1/8 NPT	⚠ **29000S-075L**
0.5	Short	1.194	2.188	2.295	4.563	3/4	2.375	1/8 NPT	**22005S-075L**
0.5	Standard	2.319	3.313	3.420	5.688	3/4	2.375	1/8 NPT	**24005S-075L**
0.5	Extended	4.319	5.313	5.420	7.688	3/4	2.375	1/8 NPT	⚠ **25005S-075L**
0.5	Long	6.819	7.813	7.920	10.188	3/4	2.375	1/8 NPT	⚠ **26005S-075L**

NOTE: 0.5 series inserts fit into both 0 and 0.5 series holders. However, 0 series inserts ONLY fit into 0 series holders. See page A30: 7 for visual.

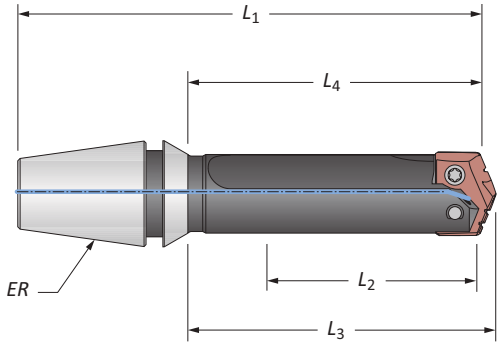

ER Collet Holder

Series	Body L_2	Body L_4	Body L_3	Body L_1	Body ER	Part No.	Collet Nut without Retaining Ring
0	41.2	48.1	50.8	75.3	ER-16	**21000S-16ER**	ER-16N
0	41.2	48.1	50.8	79.3	ER-20	**21000S-20ER**	ER-20N

Connection Accessories

Series	Insert Screws	Nylon Locking Screws	Insert Driver	Preset Torque Hand Driver	Replacement Tips	Admissible Tightening Torque*
0	72556-IP8-1	72556N-IP8-1	8IP-8	8IP-8TL	8IP-8B	15.5 in-lbs (175 N-cm)
0.5	72567-IP8-1	72567N-IP8-1	8IP-8	8IP-8TL	8IP-8B	15.5 in-lbs (175 N-cm)

*Tightening torques are calculated with a friction coefficient of μ = 0.14 and develop 90% of ultimate yield strength.

A30: 32 - 37

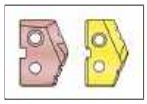

Key on A30: 1

A30: 43 & 111

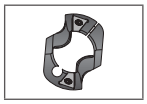

ⓘ = Imperial (in)
ⓜ = Metric (mm)
Screws sold in quantities of 10.

⚠ **WARNING** Refer to Speed and Feed charts for recommended adjustments to speeds and feeds. Refer to page A30: 146 for deep hole drilling guidelines in this section of the catalog. Visit **www.alliedmachine.com/DeepHoleGuidelines** for the most up-to-date information and procedures. Factory technical assistance is available for your specific applications through our Application Engineering Team.

T-A® Drill Accessories

0 Series | Chamfer Rings | Rotary Coolant Adapters | Torx® Plus Screws

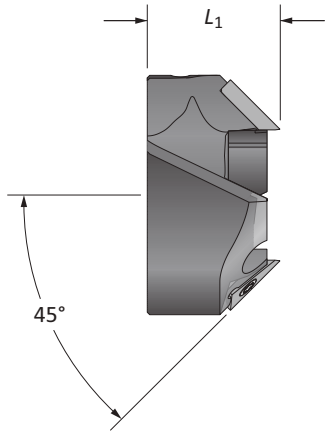

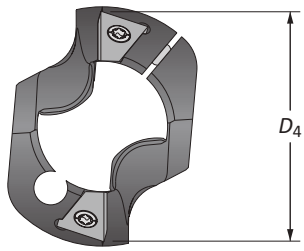

T-ACR 45 Chamfer Ring

Holder Series	D_1 Range	Chamfer Ring D_4	Chamfer Ring L_1	Part No.	Insert Part No.	Insert Screw	Insert Driver	Clamping Screw	Insert Driver
0	0.5118 - 0.6890	1.148	0.676	**T-ACR-45-0**	T-ACRI-45-B-C5A	7255-IP8-1	8IP-8	7375-IP9-1	8IP-9

Rotary Coolant Adapter (RCA) and Accessories

	ID	OD	L_1	Driving Rod Thread	P_1	Part No.	RCA O-Rings Kit Part No.*	RCA O-Rings Replacements
i	0.750	1.750	0.875	5/16" - 18	1/8 NPT	⚠ **2T-2SR**	2T1-2SR	2T1-2OR-10
m	19.1	44.5	22.2	M8 x 1.25	1/8 BSPT	⚠ **2T-2SRM**	2T1-2SR	2T1-2OR-10

*RCA Repair Kit includes (2) O-rings, (2) snap rings, and (2) thrust washers.
⚠ Refer to page A30: 110 for proper RCA assembly and safety information.

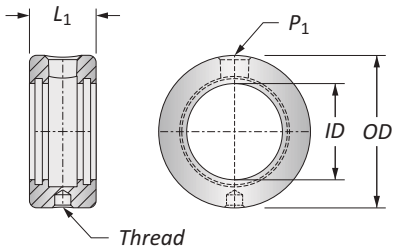

Connection Accessories

Series	Insert Screws	Nylon Locking Screws	Insert Driver	Preset Torque Hand Driver	Replacement Tips	Admissible Tightening Torque*
0	72556-IP8-1	72556N-IP8-1	8IP-8	8IP-8TL	8IP-8B	15.5 in-lbs (175 N-cm)
0.5	72567-IP8-1	72567N-IP8-1	8IP-8	8IP-8TL	8IP-8B	15.5 in-lbs (175 N-cm)

*Tightening torques are calculated with a friction coefficient of μ = 0.14 and develop 90% of ultimate yield strength.

A30: 32 - 37 A30: 38 - 42

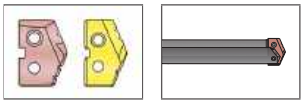

Key on A30: 1

i = Imperial (in)
m = Metric (mm)
Chamfer Ring Inserts sold separately.
Screws sold in quantities of 10.
O-rings sold in packs of 10.

⚠ **WARNING** RCA rotation during drilling can cause hose and/or hose fitting failure, machinery damage, and/or serious injury. To prevent, use RCA and positive stop studs when drilling. Factory technical assistance is also available for your specific applications.

GEN2 T-A® Drill Inserts

1 Series | Diameter Range: 0.690" - 0.960" (17.53 mm - 24.38 mm)

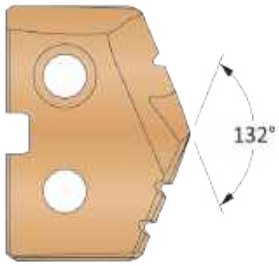

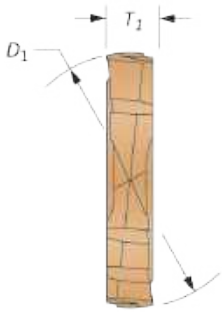

HSS Inserts – Super Cobalt • Carbide Inserts – C2 (K20) | C1 (K35)

Series	Insert: Fractional Equivalent	Insert: D_1 inch	Insert: D_1 mm	Insert: T_1	HSS Part No. AM200® Super Cobalt	Carbide Part No. AM300® C2 (K20)	Carbide Part No. AM300® C1 (K35)
1	45/64	0.7031	17.86	5/32	**451H-.703**	**4C21P-.703**	**4C11P-.703**
	—	0.7087	18.00	5/32	**451H-18**	**4C21P-18**	**4C11P-18**
	23/32	0.7188	18.26	5/32	**451H-0023**	**4C21P-0023**	**4C11P-0023**
	—	0.7283	18.50	5/32	**451H-18.5**	**4C21P-18.5**	**4C11P-18.5**
	47/64	0.7344	18.65	5/32	**451H-.734**	**4C21P-.734**	**4C11P-.734**
	—	0.7480	19.00	5/32	**451H-19**	**4C21P-19**	**4C11P-19**
	3/4	0.7500	19.05	5/32	**451H-0024**	**4C21P-0024**	**4C11P-0024**
	49/64	0.7656	19.45	5/32	**451H-.765**	**4C21P-.765**	**4C11P-.765**
	—	0.7677	19.50	5/32	**451H-19.5**	**4C21P-19.5**	**4C11P-19.5**
	25/32	0.7813	19.85	5/32	**451H-0025**	**4C21P-0025**	**4C11P-0025**
	—	0.7874	20.00	5/32	**451H-20**	**4C21P-20**	**4C11P-20**
	51/64	0.7969	20.24	5/32	**451H-.796**	**4C21P-.796**	**4C11P-.796**
	—	0.8010	20.35	5/32	**451H-.801**	**4C21P-.801**	**4C11P-.801**
	—	0.8071	20.50	5/32	**451H-20.5**	**4C21P-20.5**	**4C11P-20.5**
	13/16	0.8125	20.64	5/32	**451H-0026**	**4C21P-0026**	**4C11P-0026**
	—	0.8268	21.00	5/32	**451H-21**	**4C21P-21**	**4C11P-21**
	27/32	0.8438	21.43	5/32	**451H-0027**	**4C21P-0027**	**4C11P-0027**
	—	0.8465	21.50	5/32	**451H-21.5**	**4C21P-21.5**	**4C11P-21.5**
1.5	55/64	0.8594	21.83	5/32	**451H-.859**	**4C21P-.859**	**4C11P-.859**
	—	0.8661	22.00	5/32	**451H-22**	**4C21P-22**	**4C11P-22**
	7/8	0.8750	22.23	5/32	**451H-0028**	**4C21P-0028**	**4C11P-0028**
	—	0.8858	22.50	5/32	**451H-22.5**	**4C21P-22.5**	**4C11P-22.5**
	57/64	0.8906	22.62	5/32	**451H-.890**	**4C21P-.890**	**4C11P-.890**
	—	0.9055	23.00	5/32	**451H-23**	**4C21P-23**	**4C11P-23**
	29/32	0.9063	23.02	5/32	**451H-0029**	**4C21P-0029**	**4C11P-0029**
	59/64	0.9219	23.42	5/32	**451H-.921**	**4C21P-.921**	**4C11P-.921**
	—	0.9252	23.50	5/32	**451H-23.5**	**4C21P-23.5**	**4C11P-23.5**
	15/16	0.9375	23.81	5/32	**451H-0030**	**4C21P-0030**	**4C11P-0030**
	—	0.9449	24.00	5/32	**451H-24**	**4C21P-24**	**4C11P-24**

NOTE: 1.5 series inserts fit into both 1 and 1.5 series holders. However, 1 series inserts ONLY fit into 1 series holders. See page A30: 7 for visual.

A30: 112 - 143

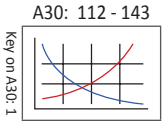

A30: 52 - 56

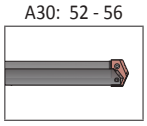

A30: 4 - 6

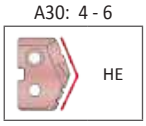

Inserts sold in quantities of 2.

Coatings not listed above can be supplied as nonstocked standards. Process fees apply.

TiN = 451T-XXXX	**TiAlN** = 451A-XXXX
TiCN = 451N-XXXX	**AM200®** = 451H-XXXX

T-A® Drill Inserts

1 Series | HSS | Diameter Range: 0.690" - 0.960" (17.53 mm - 24.38 mm)

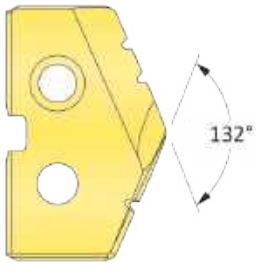

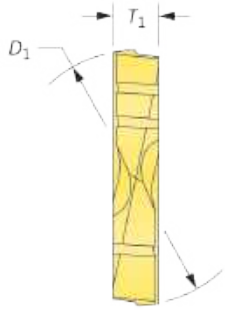

HSS Inserts – Premium Cobalt

Series	Insert: Fractional Equivalent	Insert: D_1 inch	Insert: D_1 mm	Insert: T_1	Part No. TiN	Part No. TiAlN	Part No. TiCN
1	45/64	0.7031	17.86	5/32	**181T-.703**	**181A-.703**	**181N-.703**
	—	0.7087	18.00	5/32	**181T-18**	**181A-18**	**181N-18**
	23/32	0.7188	18.26	5/32	**181T-0023**	**181A-0023**	**181N-0023**
	—	0.7283	18.50	5/32	**181T-18.5**	**181A-18.5**	**181N-18.5**
	47/64	0.7344	18.65	5/32	**181T-.734**	**181A-.734**	**181N-.734**
	—	0.7480	19.00	5/32	**181T-19**	**181A-19**	**181N-19**
	3/4	0.7500	19.05	5/32	**181T-0024**	**181A-0024**	**181N-0024**
	49/64	0.7656	19.45	5/32	**181T-.765**	**181A-.765**	**181N-.765**
	—	0.7677	19.50	5/32	**181T-19.5**	**181A-19.5**	**181N-19.5**
	25/32	0.7813	19.85	5/32	**181T-0025**	**181A-0025**	**181N-0025**
	—	0.7874	20.00	5/32	**181T-20**	**181A-20**	**181N-20**
	51/64	0.7969	20.24	5/32	**181T-.796**	**181A-.796**	**181N-.796**
	—	0.8010	20.35	5/32	**181T-.801**	**181A-.801**	**181N-.801**
	—	0.8071	20.50	5/32	**181T-20.5**	**181A-20.5**	**181N-20.5**
	13/16	0.8125	20.64	5/32	**181T-0026**	**181A-0026**	**181N-0026**
	—	0.8268	21.00	5/32	**181T-21**	**181A-21**	**181N-21**
	27/32	0.8438	21.43	5/32	**181T-0027**	**181A-0027**	**181N-0027**
	—	0.8465	21.50	5/32	**181T-21.5**	**181A-21.5**	**181N-21.5**
1.5	55/64	0.8594	21.83	5/32	**181T-.859**	**181A-.859**	**181N-.859**
	—	0.8661	22.00	5/32	**181T-22**	**181A-22**	**181N-22**
	7/8	0.8750	22.23	5/32	**181T-0028**	**181A-0028**	**181N-0028**
	—	0.8858	22.50	5/32	**181T-22.5**	**181A-22.5**	**181N-22.5**
	57/64	0.8906	22.62	5/32	**181T-.890**	**181A-.890**	**181N-.890**
	—	0.9055	23.00	5/32	**181T-23**	**181A-23**	**181N-23**
	29/32	0.9063	23.02	5/32	**181T-0029**	**181A-0029**	**181N-0029**
	59/64	0.9219	23.42	5/32	**181T-.921**	**181A-.921**	**181N-.921**
	—	0.9252	23.50	5/32	**181T-23.5**	**181A-23.5**	**181N-23.5**
	15/16	0.9375	23.81	5/32	**181T-0030**	**181A-0030**	**181N-0030**
	—	0.9449	24.00	5/32	**181T-24**	**181A-24**	**181N-24**

NOTE: 1.5 series inserts fit into both 1 and 1.5 series holders. However, 1 series inserts ONLY fit into 1 series holders. See page A30: 7 for visual.

A30: 112 - 143

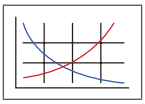

Key on A30: 1

A30: 52 - 56

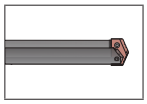

A30: 4 - 6

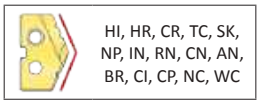

Inserts sold in quantities of 2.

Coatings not listed above can be supplied as nonstocked standards. Process fees apply.

TiN = 181T-XXXX	**TiAlN** = 181A-XXXX
TiCN = 181N-XXXX	**AM200®** = 181H-XXXX

T-A® Drill Inserts

1 Series | HSS | Diameter Range: 0.690" - 0.960" (17.53 mm - 24.38 mm)

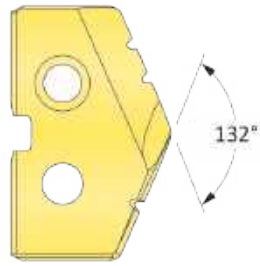

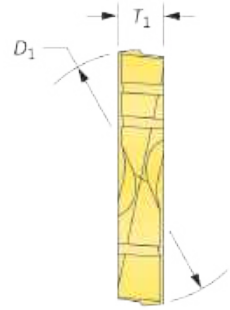

HSS Inserts – Super Cobalt

Series	Insert				Part No.		
	Fractional Equivalent	D_1 inch	D_1 mm	T_1	TiN	TiAlN	TiCN
1	45/64	0.7031	17.86	5/32	**151T-.703**	**151A-.703**	**151N-.703**
	—	0.7087	18.00	5/32	**151T-18**	**151A-18**	**151N-18**
	23/32	0.7188	18.26	5/32	**151T-0023**	**151A-0023**	**151N-0023**
	—	0.7283	18.50	5/32	**151T-18.5**	**151A-18.5**	**151N-18.5**
	47/64	0.7344	18.65	5/32	**151T-.734**	**151A-.734**	**151N-.734**
	—	0.7480	19.00	5/32	**151T-19**	**151A-19**	**151N-19**
	3/4	0.7500	19.05	5/32	**151T-0024**	**151A-0024**	**151N-0024**
	49/64	0.7656	19.45	5/32	**151T-.765**	**151A-.765**	**151N-.765**
	—	0.7677	19.50	5/32	**151T-19.5**	**151A-19.5**	**151N-19.5**
	25/32	0.7813	19.85	5/32	**151T-0025**	**151A-0025**	**151N-0025**
	—	0.7874	20.00	5/32	**151T-20**	**151A-20**	**151N-20**
	51/64	0.7969	20.24	5/32	**151T-.796**	**151A-.796**	**151N-.796**
	—	0.8010	20.35	5/32	**151T-.801**	**151A-.801**	**151N-.801**
	—	0.8071	20.50	5/32	**151T-20.5**	**151A-20.5**	**151N-20.5**
	13/16	0.8125	20.64	5/32	**151T-0026**	**151A-0026**	**151N-0026**
	—	0.8268	21.00	5/32	**151T-21**	**151A-21**	**151N-21**
	27/32	0.8438	21.43	5/32	**151T-0027**	**151A-0027**	**151N-0027**
	—	0.8465	21.50	5/32	**151T-21.5**	**151A-21.5**	**151N-21.5**
1.5	55/64	0.8594	21.83	5/32	**151T-.859**	**151A-.859**	**151N-.859**
	—	0.8661	22.00	5/32	**151T-22**	**151A-22**	**151N-22**
	7/8	0.8750	22.23	5/32	**151T-0028**	**151A-0028**	**151N-0028**
	—	0.8858	22.50	5/32	**151T-22.5**	**151A-22.5**	**151N-22.5**
	57/64	0.8906	22.62	5/32	**151T-.890**	**151A-.890**	**151N-.890**
	—	0.9055	23.00	5/32	**151T-23**	**151A-23**	**151N-23**
	29/32	0.9063	23.02	5/32	**151T-0029**	**151A-0029**	**151N-0029**
	59/64	0.9219	23.42	5/32	**151T-.921**	**151A-.921**	**151N-.921**
	—	0.9252	23.50	5/32	**151T-23.5**	**151A-23.5**	**151N-23.5**
	15/16	0.9375	23.81	5/32	**151T-0030**	**151A-0030**	**151N-0030**
	—	0.9449	24.00	5/32	**151T-24**	**151A-24**	**151N-24**

NOTE: 1.5 series inserts fit into both 1 and 1.5 series holders. However, 1 series inserts ONLY fit into 1 series holders. See page A30: 7 for visual.

A30: 112 - 143

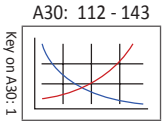

A30: 52 - 56

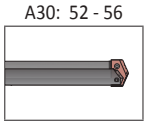

A30: 4 - 6

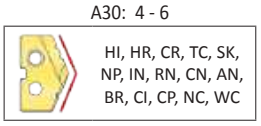

Inserts sold in quantities of 2.

Coatings not listed above can be supplied as nonstocked standards. Process fees apply.

TiN = 151T-XXXX	**TiAlN** = 151A-XXXX
TiCN = 151N-XXXX	**AM200®** = 151H-XXXX

T-A® Drill Inserts

1 Series | HSS | Diameter Range: 0.690" - 0.960" (17.53 mm - 24.38 mm)

90° Spot & Chamfer

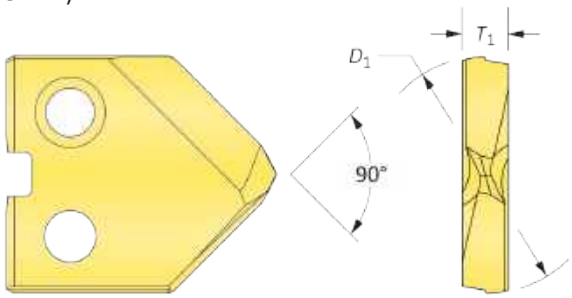

Flat Bottom

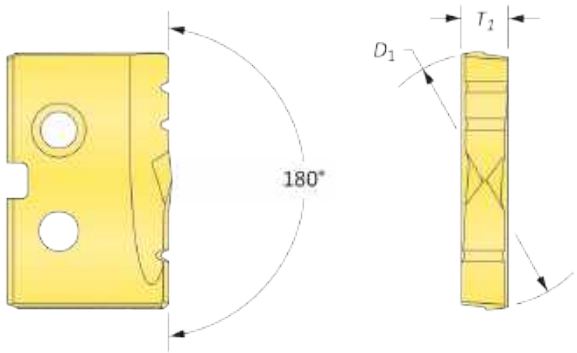

HSS Inserts – Super Cobalt

Series	Insert: Fractional Equivalent	Insert: D_1 inch	Insert: D_1 mm	Insert: T_1	90° Spot & Chamfer Part No.: TiN	90° Spot & Chamfer Part No.: TiAlN	90° Spot & Chamfer Part No.: TiCN	Flat Bottom Part No.: TiN
1	45/64	0.7031	17.86	5/32	**151T-.703-SP**	**151A-.703-SP**	**151N-.703-SP**	**151T-.703-FB**
	—	0.7087	18.00	5/32	**151T-18-SP**	**151A-18-SP**	**151N-18-SP**	**151T-18-FB**
	23/32	0.7188	18.26	5/32	**151T-0023-SP**	**151A-0023-SP**	**151N-0023-SP**	**151T-0023-FB**
	—	0.7283	18.50	5/32	**151T-18.5-SP**	**151A-18.5-SP**	**151N-18.5-SP**	**151T-18.5-FB**
	47/64	0.7344	18.65	5/32	**151T-.734-SP**	**151A-.734-SP**	**151N-.734-SP**	**151T-.734-FB**
	—	0.7480	19.00	5/32	**151T-19-SP**	**151A-19-SP**	**151N-19-SP**	**151T-19-FB**
	3/4	0.7500	19.05	5/32	**151T-0024-SP**	**151A-0024-SP**	**151N-0024-SP**	**151T-0024-FB**
	49/64	0.7656	19.45	5/32	**151T-.765-SP**	**151A-.765-SP**	**151N-.765-SP**	**151T-.765-FB**
	—	0.7677	19.50	5/32	**151T-19.5-SP**	**151A-19.5-SP**	**151N-19.5-SP**	**151T-19.5-FB**
	25/32	0.7813	19.85	5/32	**151T-0025-SP**	**151A-0025-SP**	**151N-0025-SP**	**151T-0025-FB**
	—	0.7874	20.00	5/32	**151T-20-SP**	**151A-20-SP**	**151N-20-SP**	**151T-20-FB**
	51/64	0.7969	20.24	5/32	**151T-.796-SP**	**151A-.796-SP**	**151N-.796-SP**	**151T-.796-FB**
	—	0.8010	20.35	5/32	**151T-.801-SP**	**151A-.801-SP**	**151N-.801-SP**	**151T-.801-FB**
	—	0.8071	20.50	5/32	**151T-20.5-SP**	**151A-20.5-SP**	**151N-20.5-SP**	**151T-20.5-FB**
	13/16	0.8125	20.64	5/32	**151T-0026-SP**	**151A-0026-SP**	**151N-0026-SP**	**151T-0026-FB**
	—	0.8268	21.00	5/32	**151T-21-SP**	**151A-21-SP**	**151N-21-SP**	**151T-21-FB**
	27/32	0.8438	21.43	5/32	**151T-0027-SP**	**151A-0027-SP**	**151N-0027-SP**	**151T-0027-FB**
	—	0.8465	21.50	5/32	**151T-21.5-SP**	**151A-21.5-SP**	**151N-21.5-SP**	**151T-21.5-FB**
1.5	55/64	0.8594	21.83	5/32	**151T-.859-SP**	**151A-.859-SP**	**151N-.859-SP**	**151T-.859-FB**
	—	0.8661	22.00	5/32	**151T-22-SP**	**151A-22-SP**	**151N-22-SP**	**151T-22-FB**
	7/8	0.8750	22.23	5/32	**151T-0028-SP**	**151A-0028-SP**	**151N-0028-SP**	**151T-0028-FB**
	—	0.8858	22.50	5/32	**151T-22.5-SP**	**151A-22.5-SP**	**151N-22.5-SP**	**151T-22.5-FB**
	57/64	0.8906	22.62	5/32	**151T-.890-SP**	**151A-.890-SP**	**151N-.890-SP**	**151T-.890-FB**
	—	0.9055	23.00	5/32	**151T-23-SP**	**151A-23-SP**	**151N-23-SP**	**151T-23-FB**
	29/32	0.9063	23.02	5/32	**151T-0029-SP**	**151A-0029-SP**	**151N-0029-SP**	**151T-0029-FB**
	59/64	0.9219	23.42	5/32	**151T-.921-SP**	**151A-.921-SP**	**151N-.921-SP**	**151T-.921-FB**
	—	0.9252	23.50	5/32	**151T-23.5-SP**	**151A-23.5-SP**	**151N-23.5-SP**	**151T-23.5-FB**
	15/16	0.9375	23.81	5/32	**151T-0030-SP**	**151A-0030-SP**	**151N-0030-SP**	**151T-0030-FB**
	—	0.9449	24.00	5/32	**151T-24-SP**	**151A-24-SP**	**151N-24-SP**	**151T-24-FB**

NOTE: 1.5 series inserts fit into both 1 and 1.5 series holders. However, 1 series inserts ONLY fit into 1 series holders. See page A30: 7 for visual.

A30: 112 - 143

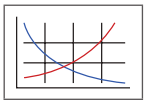

Key on A30: 1

A30: 52 - 56

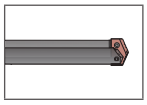

A30: 4 - 6

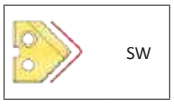

A30: 4 - 6

Inserts sold in quantities of 2.

Coatings not listed above can be supplied as nonstocked standards. Process fees apply.

TiN = 151T-XXXX	**TiAlN** = 151A-XXXX
TiCN = 151N-XXXX	**AM200®** = 151H-XXXX

T-A® Drill Inserts

1 Series | HSS | Diameter Range: 0.690" - 0.960" (17.53 mm - 24.38 mm)

Tube Sheet

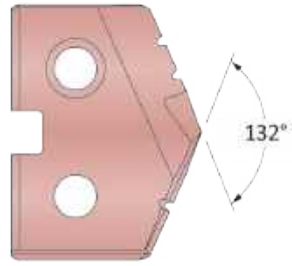

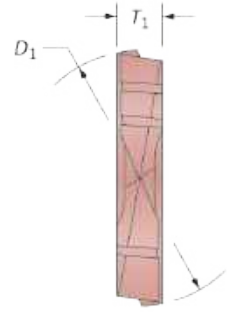

HSS Inserts – Super Cobalt | HSS

Series	Insert: Fractional Equivalent	Insert: D_1 inch	Insert: D_1 mm	Insert: T_1	Part No.: Super Cobalt	Part No.: HSS
1	—	0.7580	19.25	5/32	**151H-.7580-IN**	**131H-.7580-IN**
	49/64	0.7656	19.45	5/32	**151H-.765-IN**	**131H-.765-IN**
	25/32	0.7813	19.85	5/32	**151H-0025-IN**	**131H-0025-IN**

A30: 112 - 143

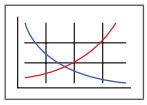

Key on A30: 1

A30: 52 - 56

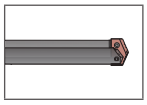

Inserts sold in quantities of 2.

Coatings not listed above can be supplied as nonstocked standards. Process fees apply.

TiN = 151T-XXXX	**TiAlN** = 151A-XXXX
TiCN = 151N-XXXX	**AM200®** = 151H-XXXX

T-A® Drill Inserts

1 Series | HSS | Diameter Range: 0.690" - 0.960" (17.53 mm - 24.38 mm)

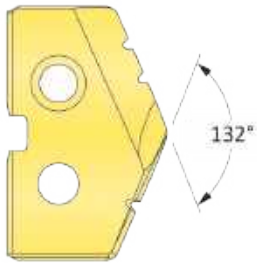

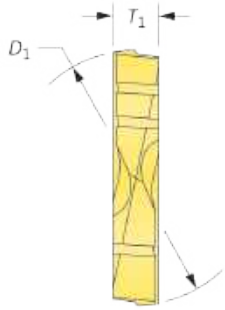

HSS Inserts – HSS

Series	Insert				Part No.		
	Fractional Equivalent	D_1 inch	D_1 mm	T_1	TiN	TiAlN	TiCN
1	45/64	0.7031	17.86	5/32	**131T-.703**	**131A-.703**	**131N-.703**
	—	0.7087	18.00	5/32	**131T-18**	**131A-18**	**131N-18**
	23/32	0.7188	18.26	5/32	**131T-0023**	**131A-0023**	**131N-0023**
	—	0.7283	18.50	5/32	**131T-18.5**	**131A-18.5**	**131N-18.5**
	47/64	0.7344	18.65	5/32	**131T-.734**	**131A-.734**	**131N-.734**
	—	0.7480	19.00	5/32	**131T-19**	**131A-19**	**131N-19**
	3/4	0.7500	19.05	5/32	**131T-0024**	**131A-0024**	**131N-0024**
	49/64	0.7656	19.45	5/32	**131T-.765**	**131A-.765**	**131N-.765**
	—	0.7677	19.50	5/32	**131T-19.5**	**131A-19.5**	**131N-19.5**
	25/32	0.7813	19.85	5/32	**131T-0025**	**131A-0025**	**131N-0025**
	—	0.7874	20.00	5/32	**131T-20**	**131A-20**	**131N-20**
	51/64	0.7969	20.24	5/32	**131T-.796**	**131A-.796**	**131N-.796**
	—	0.8010	20.35	5/32	**131T-.801**	**131A-.801**	**131N-.801**
	—	0.8071	20.50	5/32	**131T-20.5**	**131A-20.5**	**131N-20.5**
	13/16	0.8125	20.64	5/32	**131T-0026**	**131A-0026**	**131N-0026**
	—	0.8268	21.00	5/32	**131T-21**	**131A-21**	**131N-21**
	27/32	0.8438	21.43	5/32	**131T-0027**	**131A-0027**	**131N-0027**
	—	0.8465	21.50	5/32	**131T-21.5**	**131A-21.5**	**131N-21.5**
1.5	55/64	0.8594	21.83	5/32	**131T-.859**	**131A-.859**	**131N-.859**
	—	0.8661	22.00	5/32	**131T-22**	**131A-22**	**131N-22**
	7/8	0.8750	22.23	5/32	**131T-0028**	**131A-0028**	**131N-0028**
	—	0.8858	22.50	5/32	**131T-22.5**	**131A-22.5**	**131N-22.5**
	57/64	0.8906	22.62	5/32	**131T-.890**	**131A-.890**	**131N-.890**
	—	0.9055	23.00	5/32	**131T-23**	**131A-23**	**131N-23**
	29/32	0.9063	23.02	5/32	**131T-0029**	**131A-0029**	**131N-0029**
	59/64	0.9219	23.42	5/32	**131T-.921**	**131A-.921**	**131N-.921**
	—	0.9252	23.50	5/32	**131T-23.5**	**131A-23.5**	**131N-23.5**
	15/16	0.9375	23.81	5/32	**131T-0030**	**131A-0030**	**131N-0030**
	—	0.9449	24.00	5/32	**131T-24**	**131A-24**	**131N-24**

NOTE: 1.5 series inserts fit into both 1 and 1.5 series holders. However, 1 series inserts ONLY fit into 1 series holders. See page A30: 7 for visual.

A30: 112 - 143

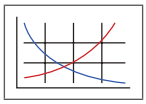

Key on A30: 1

A30: 52 - 56

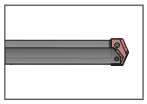

A30: 4 - 6

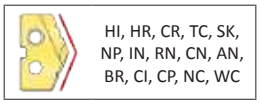

Inserts sold in quantities of 2.

Coatings not listed above can be supplied as nonstocked standards. Process fees apply.

TiN = 131T-XXXX	**TiAlN** = 131A-XXXX
TiCN = 131N-XXXX	**AM200®** = 131H-XXXX

T-A® Drill Inserts

1 Series | Carbide | Diameter Range: 0.690" - 0.960" (17.53 mm - 24.38 mm)

Standard

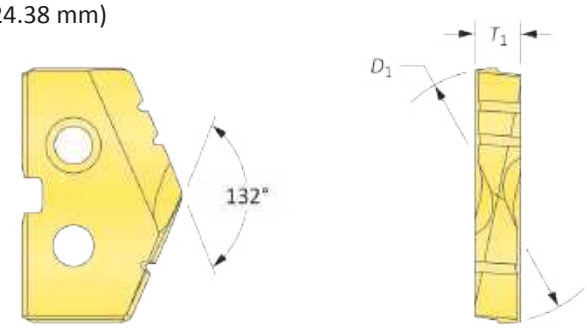

Flat Bottom

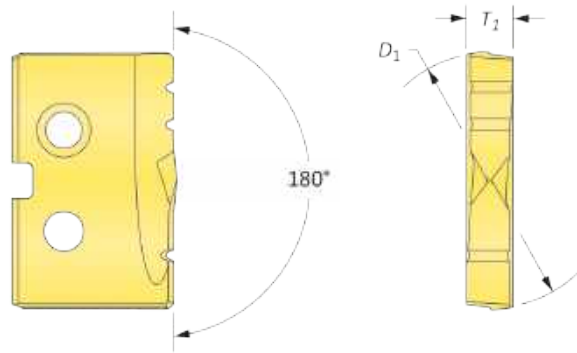

Carbide Inserts – C2 (K20)

Series	Insert: Fractional Equivalent	Insert: D_1 inch	Insert: D_1 mm	Insert: T_1	Part No. TiN	Part No. TiAlN	Flat Bottom Part No. TiN
1	45/64	0.7031	17.86	5/32	**1C21T-.703**	**1C21A-.703**	**1C21T-.703-FB**
	—	0.7087	18.00	5/32	**1C21T-18**	**1C21A-18**	**1C21T-18-FB**
	23/32	0.7188	18.26	5/32	**1C21T-0023**	**1C21A-0023**	**1C21T-0023-FB**
	—	0.7283	18.50	5/32	**1C21T-18.5**	**1C21A-18.5**	**1C21T-18.5-FB**
	47/64	0.7344	18.65	5/32	**1C21T-.734**	**1C21A-.734**	**1C21T-.734-FB**
	—	0.7480	19.00	5/32	**1C21T-19**	**1C21A-19**	**1C21T-19-FB**
	3/4	0.7500	19.05	5/32	**1C21T-0024**	**1C21A-0024**	**1C21T-0024-FB**
	49/64	0.7656	19.45	5/32	**1C21T-.765**	**1C21A-.765**	**1C21T-.765-FB**
	—	0.7677	19.50	5/32	**1C21T-19.5**	**1C21A-19.5**	**1C21T-19.5-FB**
	25/32	0.7813	19.85	5/32	**1C21T-0025**	**1C21A-0025**	**1C21T-0025-FB**
	—	0.7874	20.00	5/32	**1C21T-20**	**1C21A-20**	**1C21T-20-FB**
	51/64	0.7969	20.24	5/32	**1C21T-.796**	**1C21A-.796**	**1C21T-.796-FB**
	—	0.8010	20.35	5/32	**1C21T-.801**	**1C21A-.801**	**1C21T-.801-FB**
	—	0.8071	20.50	5/32	**1C21T-20.5**	**1C21A-20.5**	**1C21T-20.5-FB**
	13/16	0.8125	20.64	5/32	**1C21T-0026**	**1C21A-0026**	**1C21T-0026-FB**
	—	0.8268	21.00	5/32	**1C21T-21**	**1C21A-21**	**1C21T-21-FB**
	27/32	0.8438	21.43	5/32	**1C21T-0027**	**1C21A-0027**	**1C21T-0027-FB**
	—	0.8465	21.50	5/32	**1C21T-21.5**	**1C21A-21.5**	**1C21T-21.5-FB**
1.5	55/64	0.8594	21.83	5/32	**1C21T-.859**	**1C21A-.859**	**1C21T-.859-FB**
	—	0.8661	22.00	5/32	**1C21T-22**	**1C21A-22**	**1C21T-22-FB**
	7/8	0.8750	22.23	5/32	**1C21T-0028**	**1C21A-0028**	**1C21T-0028-FB**
	—	0.8858	22.50	5/32	**1C21T-22.5**	**1C21A-22.5**	**1C21T-22.5-FB**
	57/64	0.8906	22.62	5/32	**1C21T-.890**	**1C21A-.890**	**1C21T-.890-FB**
	—	0.9055	23.00	5/32	**1C21T-23**	**1C21A-23**	**1C21T-23-FB**
	29/32	0.9063	23.02	5/32	**1C21T-0029**	**1C21A-0029**	**1C21T-0029-FB**
	59/64	0.9219	23.42	5/32	**1C21T-.921**	**1C21A-.921**	**1C21T-.921-FB**
	—	0.9252	23.50	5/32	**1C21T-23.5**	**1C21A-23.5**	**1C21T-23.5-FB**
	15/16	0.9375	23.81	5/32	**1C21T-0030**	**1C21A-0030**	**1C21T-0030-FB**
	—	0.9449	24.00	5/32	**1C21T-24**	**1C21A-24**	**1C21T-24-FB**

NOTE: 1.5 series inserts fit into both 1 and 1.5 series holders. However, 1 series inserts ONLY fit into 1 series holders. See page A30: 7 for visual.

A30: 112 - 143

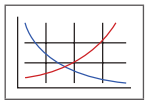

Key on A30: 1

A30: 52 - 56

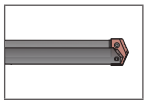

A30: 4 - 6

HI, HR, CR, TC, SK, NP, IN, RN, CN, AN, BR, CI, CP, NC, WC, BT

A30: 4 - 6

FN

Coatings not listed above can be supplied as nonstocked standards. Process fees apply.

Inserts sold in quantities of 2.

TiN = 1C21T-XXXX	**TiAlN** = 1C21A-XXXX
TiCN = 1C21N-XXXX	**AM200®** = 1C21H-XXXX

T-A® Drill Inserts

1 Series | Carbide | Diameter Range: 0.690" - 0.960" (17.53 mm - 24.38 mm)

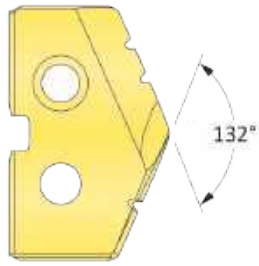

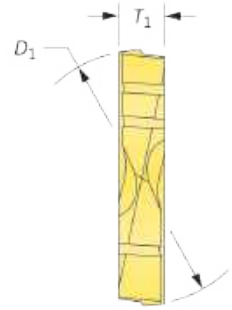

Carbide Inserts – C5 (P40) | C3 (K10) | N2

Series	Insert				C5 Part No.		C3 Part No.	N2 Part No.
	Fractional Equivalent	D_1 inch	D_1 mm	T_1	TiN	TiAlN	TiAlN (Cast Iron)	Diamond Film*
1	45/64	0.7031	17.86	5/32	**1C51T-.703**	**1C51A-.703**	**1C31A-.703-CI**	**1N21D-.703**
	—	0.7087	18.00	5/32	**1C51T-18**	**1C51A-18**	**1C31A-18-CI**	**1N21D-18**
	23/32	0.7188	18.26	5/32	**1C51T-0023**	**1C51A-0023**	**1C31A-0023-CI**	**1N21D-0023**
	—	0.7283	18.50	5/32	**1C51T-18.5**	**1C51A-18.5**	**1C31A-18.5-CI**	**1N21D-18.5**
	47/64	0.7344	18.65	5/32	**1C51T-.734**	**1C51A-.734**	**1C31A-.734-CI**	**1N21D-.734**
	—	0.7480	19.00	5/32	**1C51T-19**	**1C51A-19**	**1C31A-19-CI**	**1N21D-19**
	3/4	0.7500	19.05	5/32	**1C51T-0024**	**1C51A-0024**	**1C31A-0024-CI**	**1N21D-0024**
	49/64	0.7656	19.45	5/32	**1C51T-.765**	**1C51A-.765**	**1C31A-.765-CI**	**1N21D-.765**
	—	0.7677	19.50	5/32	**1C51T-19.5**	**1C51A-19.5**	**1C31A-19.5-CI**	**1N21D-19.5**
	25/32	0.7813	19.85	5/32	**1C51T-0025**	**1C51A-0025**	**1C31A-0025-CI**	**1N21D-0025**
	—	0.7874	20.00	5/32	**1C51T-20**	**1C51A-20**	**1C31A-20-CI**	**1N21D-20**
	51/64	0.7969	20.24	5/32	**1C51T-.796**	**1C51A-.796**	**1C31A-.796-CI**	**1N21D-.796**
	—	0.8010	20.35	5/32	**1C51T-.801**	**1C51A-.801**	**1C31A-.801-CI**	**1N21D-.801**
	—	0.8071	20.50	5/32	**1C51T-20.5**	**1C51A-20.5**	**1C31A-20.5-CI**	**1N21D-20.5**
	13/16	0.8125	20.64	5/32	**1C51T-0026**	**1C51A-0026**	**1C31A-0026-CI**	**1N21D-0026**
	—	0.8268	21.00	5/32	**1C51T-21**	**1C51A-21**	**1C31A-21-CI**	**1N21D-21**
	27/32	0.8438	21.43	5/32	**1C51T-0027**	**1C51A-0027**	**1C31A-0027-CI**	**1N21D-0027**
	—	0.8465	21.50	5/32	**1C51T-21.5**	**1C51A-21.5**	**1C31A-21.5-CI**	**1N21D-21.5**
1.5	55/64	0.8594	21.83	5/32	**1C51T-.859**	**1C51A-.859**	**1C31A-.859-CI**	**1N21D-.859**
	—	0.8661	22.00	5/32	**1C51T-22**	**1C51A-22**	**1C31A-22-CI**	**1N21D-22**
	7/8	0.8750	22.23	5/32	**1C51T-0028**	**1C51A-0028**	**1C31A-0028-CI**	**1N21D-0028**
	—	0.8858	22.50	5/32	**1C51T-22.5**	**1C51A-22.5**	**1C31A-22.5-CI**	**1N21D-22.5**
	57/64	0.8906	22.62	5/32	**1C51T-.890**	**1C51A-.890**	**1C31A-.890-CI**	**1N21D-.890**
	—	0.9055	23.00	5/32	**1C51T-23**	**1C51A-23**	**1C31A-23-CI**	**1N21D-23**
	29/32	0.9063	23.02	5/32	**1C51T-0029**	**1C51A-0029**	**1C31A-0029-CI**	**1N21D-0029**
	59/64	0.9219	23.42	5/32	**1C51T-.921**	**1C51A-.921**	**1C31A-.921-CI**	**1N21D-.921**
	—	0.9252	23.50	5/32	**1C51T-23.5**	**1C51A-23.5**	**1C31A-23.5-CI**	**1N21D-23.5**
	15/16	0.9375	23.81	5/32	**1C51T-0030**	**1C51A-0030**	**1C31A-0030-CI**	**1N21D-0030**
	—	0.9449	24.00	5/32	**1C51T-24**	**1C51A-24**	**1C31A-24-CI**	**1N21D-24**

NOTE: 1.5 series inserts fit into both 1 and 1.5 series holders. However, 1 series inserts ONLY fit into 1 series holders. See page A30: 7 for visual.
*Diamond Film is only available in standard geometry. For additional geometries, please contact Application Engineering.

A30: 112 - 143

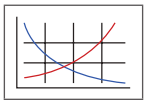

Key on A30: 1

A30: 52 - 56

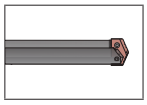

A30: 4 - 6

HI, HR, CR, TC, SK, NP, IN, RN, CN, AN, BR, CI, CP, NC, WC, BT

Inserts sold in quantities of 2.

Coatings not listed above can be supplied as nonstocked standards. Process fees apply.

TiN = 1C51T-XXXX	**TiAlN** = 1C51A-XXXX
TiCN = 1C51N-XXXX	**AM200®** = 1C51H-XXXX

T-A® Drill Insert Holders

1 Series | Flange Shank | Diameter Range: 0.690" - 0.960" (17.53 mm - 24.38 mm)

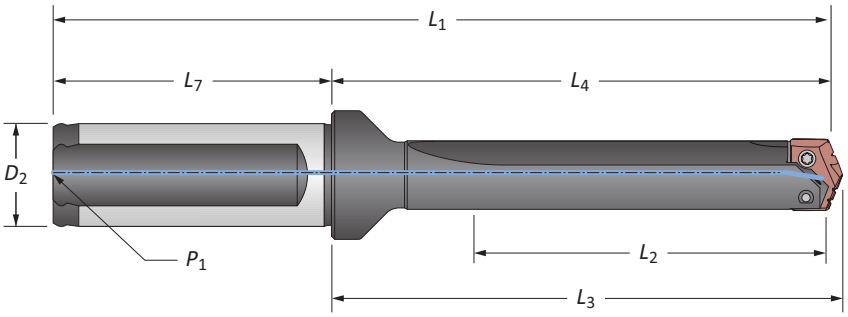

Stub Length

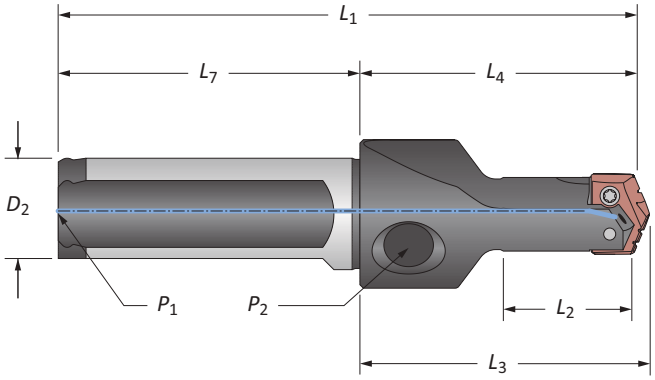

Straight Flute

	Series	Length	Body L_2	Body L_4	Body L_3	Body L_1	Shank D_2	Shank L_7	Shank P_1	Part No.
i	1	Stub	1.992	2.984	3.124	5.264	1	2.280	1/8 NPT	**21010S-100F**
		Short	2.643	4.219	4.359	6.499	1	2.280	1/8 NPT	**22010S-100F**
		Intermediate	4.518	6.094	6.234	8.374	1	2.280	1/8 NPT	**23010S-100F**
		Standard	6.518	8.094	8.234	10.374	1	2.280	1/8 NPT	**24010S-100F**
		Extended	10.518	12.094	12.234	14.374	1	2.280	1/8 NPT	⚠ **25010S-100F**
	1.5	Stub	2.554	3.484	3.624	5.764	1	2.280	1/8 NPT	**21015S-100F**
		Short	2.607	4.219	4.359	6.499	1	2.280	1/8 NPT	**22015S-100F**
		Intermediate	4.482	6.094	6.234	8.374	1	2.280	1/8 NPT	**23015S-100F**
		Standard	6.482	8.094	8.234	10.374	1	2.280	1/8 NPT	**24015S-100F**
		Extended	10.482	12.094	12.234	14.374	1	2.280	1/8 NPT	⚠ **25015S-100F**
m	1	Stub	50.6	75.8	79.3	131.8	25	56.0	1/8 BSPT	**21010S-25FM**
		Short	66.8	107.2	110.7	163.2	25	56.0	1/8 BSPT	**22010S-25FM**
		XL	454.2	494.5	498.1	550.5	25	56.0	1/8 BSPT	⚠ **27010S-25FM**
		3XL	562.1	602.5	606.0	658.5	25	56.0	1/8 BSPT	⚠ **29010S-25FM**
	1.5	Stub	64.9	88.5	92.0	144.5	25	56.0	1/8 BSPT	**21015S-25FM**
		Short	66.1	107.2	110.7	163.2	25	56.0	1/8 BSPT	**22015S-25FM**

NOTE: Stub length holders have a 1/8" side pipe tap (P_2).
NOTE: 1.5 series inserts fit into both 1 and 1.5 series holders. However, 1 series inserts ONLY fit into 1 series holders. See page A30: 7 for visual.

Connection Accessories

Series	Insert Screws	Nylon Locking Screws	Insert Driver	Preset Torque Hand Driver	Replacement Tips	Admissible Tightening Torque*
1	7375-IP9-1	7375N-IP9-1	8IP-9	8IP-9TL	8IP-9B	27.0 in-lbs (305 N-cm)
1.5	739-IP9-1	739N-IP9-1	8IP-9	8IP-9TL	8IP-9B	27.0 in-lbs (305 N-cm)

*Tightening torques are calculated with a friction coefficient of μ = 0.14 and develop 90% of ultimate yield strength.

A30: 44 - 51

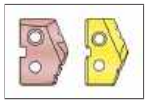

A30: 57 & 111

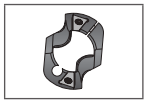

i = Imperial (in)
m = Metric (mm)
Screws sold in quantities of 10.

⚠ **WARNING** Refer to Speed and Feed charts for recommended adjustments to speeds and feeds. Refer to page A30: 146 for deep hole drilling guidelines in this section of the catalog. Visit **www.alliedmachine.com/DeepHoleGuidelines** for the most up-to-date information and procedures. Factory technical assistance is available for your specific applications through our Application Engineering Team.

T-A® Drill Insert Holders

1 Series | Flange Shank | Diameter Range: 0.690" - 0.960" (17.53 mm - 24.38 mm)

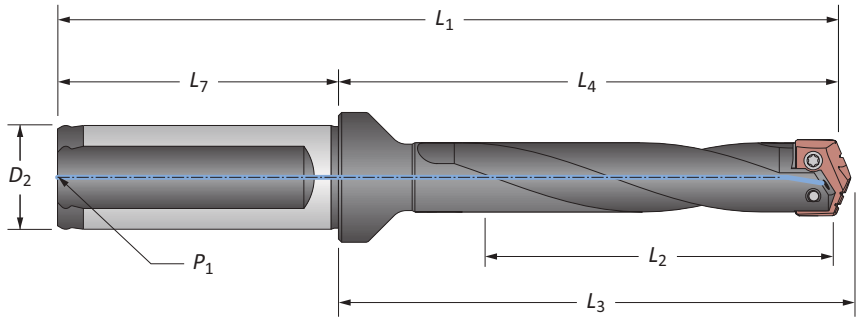

Helical Flute

	Series	Length	Body L_2	Body L_4	Body L_3	Body L_1	Shank D_2	Shank L_7	Shank P_1	Part No.
i	1	Intermediate	5.229	6.094	6.234	8.374	1	2.280	1/8 NPT	**23010H-100F**
		Standard	7.229	8.094	8.234	10.374	1	2.280	1/8 NPT	**24010H-100F**
		Standard Plus	9.226	10.091	10.231	12.371	1	2.280	1/8 NPT	⚠ **24510H-100F**
		Extended	11.229	12.094	12.234	14.374	1	2.280	1/8 NPT	⚠ **25010H-100F**
		Long	14.974	15.839	15.979	18.119	1	2.280	1/8 NPT	⚠ **26010H-100F**
	1.5	Intermediate	5.291	6.094	6.234	8.374	1	2.280	1/8 NPT	**23015H-100F**
		Standard	7.291	8.094	8.234	10.374	1	2.280	1/8 NPT	**24015H-100F**
		Extended	11.291	12.094	12.234	14.374	1	2.280	1/8 NPT	⚠ **25015H-100F**
m	1	Intermediate	132.8	154.8	158.3	210.8	25	56.0	1/8 BSPT	**23010H-25FM**
		Standard	183.6	205.6	209.1	261.6	25	56.0	1/8 BSPT	**24010H-25FM**
		Standard Plus	234.3	256.3	259.9	312.3	25	56.0	1/8 BSPT	⚠ **24510H-25FM**
		Extended	285.2	307.2	310.7	363.2	25	56.0	1/8 BSPT	⚠ **25010H-25FM**
		Long	380.3	402.3	405.9	458.3	25	56.0	1/8 BSPT	⚠ **26010H-25FM**
	1.5	Intermediate	134.4	154.8	158.3	210.8	25	56.0	1/8 BSPT	**23015H-25FM**
		Standard	185.2	205.6	209.1	261.6	25	56.0	1/8 BSPT	**24015H-25FM**
		Extended	286.8	307.2	310.7	363.2	25	56.0	1/8 BSPT	⚠ **25015H-25FM**

NOTE: 1.5 series inserts fit into both 1 and 1.5 series holders. However, 1 series inserts ONLY fit into 1 series holders. See page A30: 7 for visual.

Connection Accessories

Series	Insert Screws	Nylon Locking Screws	Insert Driver	Preset Torque Hand Driver	Replacement Tips	Admissible Tightening Torque*
1	7375-IP9-1	7375N-IP9-1	8IP-9	8IP-9TL	8IP-9B	27.0 in-lbs (305 N-cm)
1.5	739-IP9-1	739N-IP9-1	8IP-9	8IP-9TL	8IP-9B	27.0 in-lbs (305 N-cm)

*Tightening torques are calculated with a friction coefficient of μ = 0.14 and develop 90% of ultimate yield strength.

A30: 44 - 51

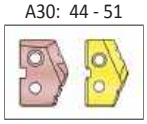

Key on A30: 1

i = Imperial (in)
m = Metric (mm)
Screws sold in quantities of 10.

⚠ WARNING Refer to Speed and Feed charts for recommended adjustments to speeds and feeds. Refer to page A30: 146 for deep hole drilling guidelines in this section of the catalog. Visit **www.alliedmachine.com/DeepHoleGuidelines** for the most up-to-date information and procedures. Factory technical assistance is available for your specific applications through our Application Engineering Team.

T-A® Drill Insert Holders

1 Series | Taper Shank | Diameter Range: 0.690" - 0.960" (17.53 mm - 24.38 mm)

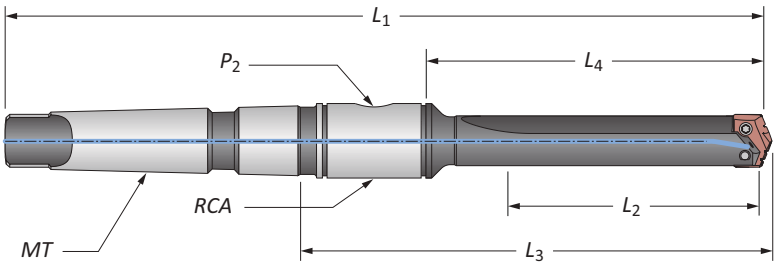

Straight Flute

	Series	Length	Body L_2	Body L_4	Body L_3	Body L_1	Shank MT*	Shank P_2	Shank RCA	Part No.
i	1	Short	2.631	3.875	5.608	9.156	#3 MT	1/8 NPT	2T-3SR	**22010S-003I**
		Short	2.631	3.875	5.671	10.156	#4 MT	1/8 NPT	2T-3SR	**22010S-004I**
		Intermediate	4.631	5.875	7.608	11.156	#3 MT	1/8 NPT	2T-3SR	**23010S-003I**
		Standard	6.631	7.875	9.608	13.156	#3 MT	1/8 NPT	2T-3SR	**24010S-003I**
		Standard	6.631	7.875	9.671	14.156	#4 MT	1/8 NPT	2T-3SR	**24010S-004I**
		Extended	10.631	11.875	13.608	17.156	#3 MT	1/8 NPT	2T-3SR	⚠ **25010S-003I**
	1.5	Short	2.482	3.875	5.608	9.156	#3 MT	1/8 NPT	2T-3SR	**22015S-003I**
		Short	2.483	3.875	5.671	10.156	#4 MT	1/8 NPT	2T-3SR	**22015S-004I**
		Intermediate	4.482	5.875	7.608	11.156	#3 MT	1/8 NPT	2T-3SR	**23015S-003I**
		Standard	6.482	7.875	9.608	13.156	#3 MT	1/8 NPT	2T-3SR	**24015S-003I**
		Standard	6.483	7.875	9.671	14.156	#4 MT	1/8 NPT	2T-3SR	**24015S-004I**
		Extended	10.482	11.875	13.608	17.156	#3 MT	1/8 NPT	2T-3SR	⚠ **25015S-003I**
m	1	Short	66.8	98.4	142.4	232.6	#3 MT ISO	1/8 BSPT	2T-3SRM	**22010S-003M**
	1.5	Short	63.0	98.4	142.4	232.6	#3 MT ISO	1/8 BSPT	2T-3SRM	**22015S-003M**

*MT ISO 296 type BEK.

NOTE: 1.5 series inserts fit into both 1 and 1.5 series holders. However, 1 series inserts ONLY fit into 1 series holders. See page A30: 7 for visual.

Connection Accessories

Series	Insert Screws	Nylon Locking Screws	Insert Driver	Preset Torque Hand Driver	Replacement Tips	Admissible Tightening Torque*
1	7375-IP9-1	7375N-IP9-1	8IP-9	8IP-9TL	8IP-9B	27.0 in-lbs (305 N-cm)
1.5	739-IP9-1	739N-IP9-1	8IP-9	8IP-9TL	8IP-9B	27.0 in-lbs (305 N-cm)

*Tightening torques are calculated with a friction coefficient of μ = 0.14 and develop 90% of ultimate yield strength.

A30: 44 - 51

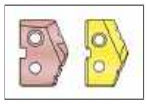

Key on A30: 1

A30: 57 & 110

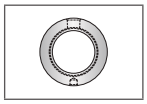

A30: 57 & 111

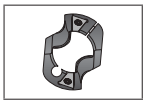

i = Imperial (in)
m = Metric (mm)
Screws sold in quantities of 10.

⚠ **WARNING** Refer to Speed and Feed charts for recommended adjustments to speeds and feeds. Refer to page A30: 146 for deep hole drilling guidelines in this section of the catalog. Visit **www.alliedmachine.com/DeepHoleGuidelines** for the most up-to-date information and procedures. Factory technical assistance is available for your specific applications through our Application Engineering Team.

T-A® Drill Insert Holders

1 Series | Taper Shank | Diameter Range: 0.690" - 0.960" (17.53 mm - 24.38 mm)

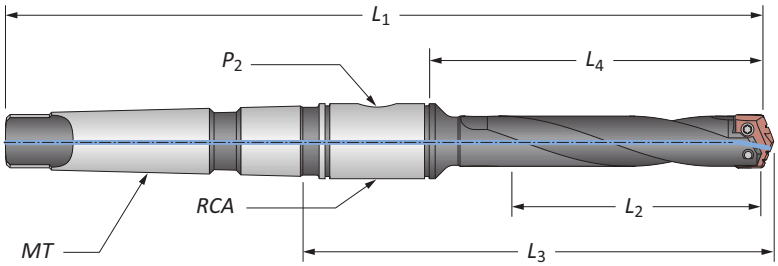

Helical Flute

	Series	Length	Body L_2	Body L_4	Body L_3	Body L_1	Shank MT*	Shank P_2	Shank RCA	Part No.
i	1	Intermediate	5.236	5.875	7.608	11.156	#3 MT	1/8 NPT	2T-3SR	**23010H-003I**
		Standard	7.236	7.875	9.608	13.156	#3 MT	1/8 NPT	2T-3SR	**24010H-003I**
		Standard	7.236	7.875	9.671	14.156	#4 MT	1/8 NPT	2T-3SR	**24010H-004I**
		Extended	11.236	11.875	13.608	17.156	#3 MT	1/8 NPT	2T-3SR	⚠ **25010H-003I**
	1.5	Intermediate	5.219	5.875	7.608	11.156	#3 MT	1/8 NPT	2T-3SR	**23015H-003I**
		Standard	7.219	7.875	9.608	13.156	#3 MT	1/8 NPT	2T-3SR	**24015H-003I**
		Standard	7.219	7.875	9.671	14.156	#4 MT	1/8 NPT	2T-3SR	**24015H-004I**
		Extended	11.219	11.875	13.608	17.156	#3 MT	1/8 NPT	2T-3SR	⚠ **25015H-003I**
m	1	Intermediate	133.0	149.2	193.2	283.4	#3 MT ISO	1/8 BSPT	2T-3SRM	**23010H-003M**
		Standard	183.8	200.0	244.0	334.2	#3 MT ISO	1/8 BSPT	2T-3SRM	**24010H-003M**
		Extended	285.4	301.6	345.6	435.8	#3 MT ISO	1/8 BSPT	2T-3SRM	⚠ **25010H-003M**
	1.5	Intermediate	132.6	149.2	193.2	283.4	#3 MT ISO	1/8 BSPT	2T-3SRM	**23015H-003M**
		Standard	183.4	200.0	244.0	334.2	#3 MT ISO	1/8 BSPT	2T-3SRM	**24015H-003M**
		Extended	285.0	301.6	345.6	435.8	#3 MT ISO	1/8 BSPT	2T-3SRM	⚠ **25015H-003M**

*MT ISO 296 type BEK.

NOTE: 1.5 series inserts fit into both 1 and 1.5 series holders. However, 1 series inserts ONLY fit into 1 series holders. See page A30: 7 for visual.

Connection Accessories

Series	Insert Screws	Nylon Locking Screws	Insert Driver	Preset Torque Hand Driver	Replacement Tips	Admissible Tightening Torque*
1	7375-IP9-1	7375N-IP9-1	8IP-9	8IP-9TL	8IP-9B	27.0 in-lbs (305 N-cm)
1.5	739-IP9-1	739N-IP9-1	8IP-9	8IP-9TL	8IP-9B	27.0 in-lbs (305 N-cm)

*Tightening torques are calculated with a friction coefficient of μ = 0.14 and develop 90% of ultimate yield strength.

A30: 44 - 51

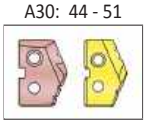

Key on A30: 1

A30: 57 & 110

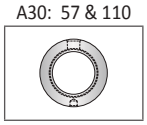

i = Imperial (in)
m = Metric (mm)
Screws sold in quantities of 10.

⚠ **WARNING** Refer to Speed and Feed charts for recommended adjustments to speeds and feeds. Refer to page A30: 146 for deep hole drilling guidelines in this section of the catalog. Visit **www.alliedmachine.com/DeepHoleGuidelines** for the most up-to-date information and procedures. Factory technical assistance is available for your specific applications through our Application Engineering Team.

T-A® Drill Insert Holders

1 Series | Straight Shank | Diameter Range: 0.690" - 0.960" (17.53 mm - 24.38 mm)

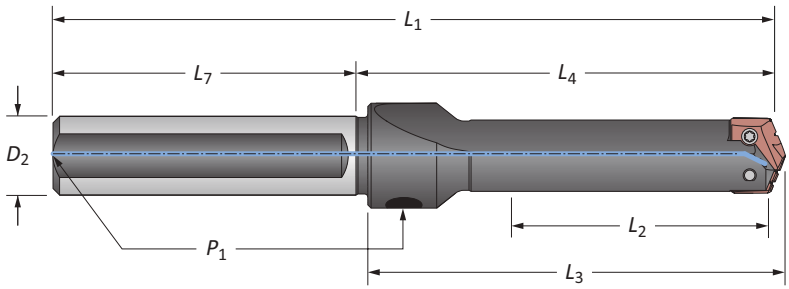

Straight Flute

Series	Length	Body L_2	Body L_4	Body L_3	Body L_1	Shank D_2	Shank L_7	Shank P_1	Part No.
1	Short	2.619	3.875	4.015	6.875	3/4	3.000	1/8 NPT	**22010S-075L**
	Short	2.647	3.875	4.015	6.875	1	3.000	1/8 NPT	**22010S-100L**
	Intermediate	4.647	5.875	6.015	8.875	1	3.000	1/8 NPT	**23010S-100L**
	Standard	6.619	7.875	8.015	10.875	3/4	3.000	1/8 NPT	**24010S-075L**
	Standard	6.647	7.875	8.015	10.875	1	3.000	1/8 NPT	**24010S-100L**
	Extended	10.647	11.875	12.015	14.875	1	3.000	1/8 NPT	⚠ **25010S-100L**
	XL	18.022	19.250	19.390	22.250	1	3.000	1/8 NPT	⚠ **27010S-100L**
	3XL	22.272	23.500	23.640	26.500	1	3.000	1/8 NPT	⚠ **29010S-100L**
1.5	Short	2.649	3.875	4.015	6.875	3/4	3.000	1/8 NPT	**22015S-075L**
	Short	2.661	3.875	4.015	6.875	1	3.000	1/8 NPT	**22015S-100L**
	Intermediate	4.661	5.875	6.015	8.875	1	3.000	1/8 NPT	**23015S-100L**
	Standard	6.649	7.875	8.015	10.875	3/4	3.000	1/8 NPT	**24015S-075L**
	Standard	6.661	7.875	8.015	10.875	1	3.000	1/8 NPT	**24015S-100L**
	Extended	10.661	11.875	12.015	14.875	1	3.000	1/8 NPT	⚠ **25015S-100L**

NOTE: 1.5 series inserts fit into both 1 and 1.5 series holders. However, 1 series inserts ONLY fit into 1 series holders. See page A30: 7 for visual.

Connection Accessories

Series	Insert Screws	Nylon Locking Screws	Insert Driver	Preset Torque Hand Driver	Replacement Tips	Admissible Tightening Torque*
1	7375-IP9-1	7375N-IP9-1	8IP-9	8IP-9TL	8IP-9B	27.0 in-lbs (305 N-cm)
1.5	739-IP9-1	739N-IP9-1	8IP-9	8IP-9TL	8IP-9B	27.0 in-lbs (305 N-cm)

*Tightening torques are calculated with a friction coefficient of μ = 0.14 and develop 90% of ultimate yield strength.

A30: 44 - 51

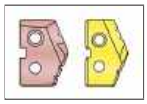

Key on A30: 1

A30: 57 & 111

ⓘ = Imperial (in)
ⓜ = Metric (mm)
Screws sold in quantities of 10.

⚠ WARNING Refer to Speed and Feed charts for recommended adjustments to speeds and feeds. Refer to page A30: 146 for deep hole drilling guidelines in this section of the catalog. Visit **www.alliedmachine.com/DeepHoleGuidelines** for the most up-to-date information and procedures. Factory technical assistance is available for your specific applications through our Application Engineering Team.

T-A® Drill Accessories

1 Series | Chamfer Rings | Rotary Coolant Adapters | Torx® Plus Screws |

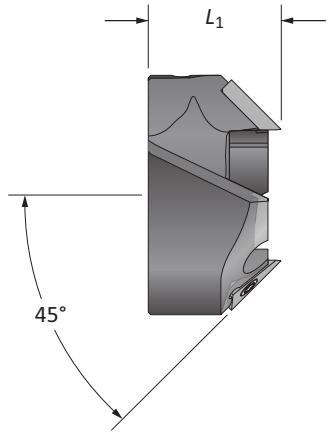

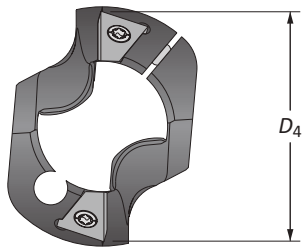

T-ACR 45 Chamfer Ring

Holder Series	D_1 Range	Chamfer Ring D_4	Chamfer Ring L_1	Part No.	Insert Part No.	Insert Screw	Insert Driver	Clamping Screw	Insert Driver
1	0.6900 - 0.8540	1.330	0.797	**T-ACR-45-1**	T-ACRI-45-B-C5A	7255-IP8-1	8IP-8	7495-IP15-1	8IP-15
1.5	0.8540 - 0.9600	1.493	0.891	**T-ACR-45-1.5**	T-ACRI-45-B-C5A	7255-IP8-1	8IP-8	7495-IP15-1	8IP-15

Rotary Coolant Adapter (RCA) and Accessories

	ID	*OD*	L_1	Driving Rod Thread	P_1	Part No.	RCA O-Rings Kit Part No.*	RCA O-Rings Replacements
i	1.000	2.125	1.125	5/16" - 18	1/8 NPT	⚠ **2T-3SR**	2T1-3SR	2T1-3OR-10
m	25.4	54.0	28.6	M8 x 1.25	1/8 BSPT	⚠ **2T-3SRM**	2T1-3SR	2T1-3OR-10

*RCA Repair Kit includes (2) O-rings, (2) snap rings, and (2) thrust washers.
⚠ Refer to page A30: 110 for proper RCA assembly and safety information.

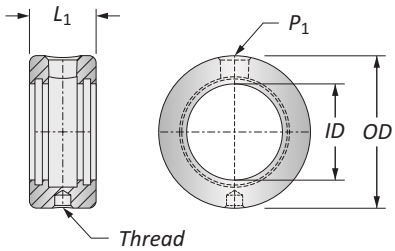

Connection Accessories

Series	Insert Screws	Nylon Locking Screws	Insert Driver	Preset Torque Hand Driver	Replacement Tips	Admissible Tightening Torque*
1	7375-IP9-1	7375N-IP9-1	8IP-9	8IP-9TL	8IP-9B	27.0 in-lbs (305 N-cm)
1.5	739-IP9-1	739N-IP9-1	8IP-9	8IP-9TL	8IP-9B	27.0 in-lbs (305 N-cm)

*Tightening torques are calculated with a friction coefficient of μ = 0.14 and develop 90% of ultimate yield strength.

A30: 44 - 51

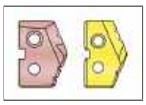

A30: 52 - 56

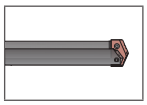

Key on A30: 1

i = Imperial (in)
m = Metric (mm)
Chamfer Ring Inserts sold separately.
Screws sold in quantities of 10.
O-rings sold in packs of 10.

⚠ **WARNING** RCA rotation during drilling can cause hose and/or hose fitting failure, machinery damage, and/or serious injury. To prevent, use RCA and positive stop studs when drilling. Factory technical assistance is also available for your specific applications.

GEN2 T-A® Drill Inserts

2 Series | Diameter Range: 0.961" - 1.380" (24.41 mm - 35.05 mm)

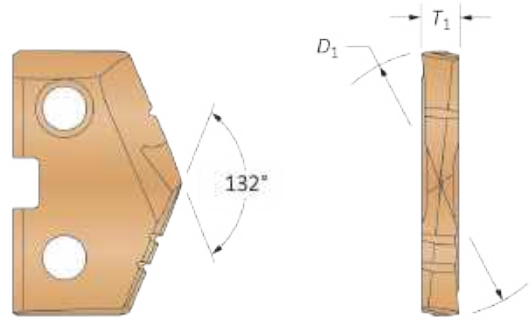

HSS Inserts – Super Cobalt • Carbide Inserts – C2 (K20) | C1 (K35)

Series	Insert: Fractional Equivalent	Insert: D_1 inch	Insert: D_1 mm	Insert: T_1	HSS Part No. AM200® Super Cobalt	Carbide Part No. AM300® C2 (K20)	Carbide Part No. AM300® C1 (K35)
2	—	0.9646	24.50	3/16	452H-24.5	4C22P-24.5	4C12P-24.5
	31/32	0.9688	24.61	3/16	452H-0031	4C22P-0031	4C12P-0031
	—	0.9760	24.79	3/16	452H-.976	4C22P-.976	4C12P-.976
	63/64	0.9843	25.00	3/16	452H-25	4C22P-25	4C12P-25
	1	1.0000	25.40	3/16	452H-0100	4C22P-0100	4C12P-0100
	—	1.0039	25.50	3/16	452H-25.5	4C22P-25.5	4C12P-25.5
	1-1/64	1.0156	25.80	3/16	452H-1.015	4C22P-1.015	4C12P-1.015
	—	1.0236	26.00	3/16	452H-26	4C22P-26	4C12P-26
	1-1/32	1.0313	26.20	3/16	452H-0101	4C22P-0101	4C12P-0101
	—	1.0433	26.50	3/16	452H-26.5	4C22P-26.5	4C12P-26.5
	1-3/64	1.0469	26.59	3/16	452H-1.046	4C22P-1.046	4C12P-1.046
	1-1/16	1.0625	26.99	3/16	452H-0102	4C22P-0102	4C12P-0102
	—	1.0630	27.00	3/16	452H-27	4C22P-27	4C12P-27
	—	1.0827	27.50	3/16	452H-27.5	4C22P-27.5	4C12P-27.5
	1-3/32	1.0938	27.78	3/16	452H-0103	4C22P-0103	4C12P-0103
	—	1.1024	28.00	3/16	452H-28	4C22P-28	4C12P-28
	1-7/64	1.1094	28.18	3/16	452H-1.109	4C22P-1.109	4C12P-1.109
	—	1.1220	28.50	3/16	452H-28.5	4C22P-28.5	4C12P-28.5
	1-1/8	1.1250	28.58	3/16	452H-0104	4C22P-0104	4C12P-0104
	—	1.1417	29.00	3/16	452H-29	4C22P-29	4C12P-29
	1-5/32	1.1563	29.37	3/16	452H-0105	4C22P-0105	4C12P-0105
	—	1.1614	29.50	3/16	452H-29.5	4C22P-29.5	4C12P-29.5
	—	1.1811	30.00	3/16	452H-30	4C22P-30	4C12P-30
2.5	1-3/16	1.1875	30.16	3/16	452H-0106	4C22P-0106	4C12P-0106
	—	1.2008	30.50	3/16	452H-30.5	4C22P-30.5	4C12P-30.5
	1-7/32	1.2188	30.96	3/16	452H-0107	4C22P-0107	4C12P-0107
	—	1.2205	31.00	3/16	452H-31	4C22P-31	4C12P-31
	—	1.2260	31.14	3/16	452H-1.226	4C22P-1.226	4C12P-1.226
	—	1.2310	31.27	3/16	452H-1.231	4C22P-1.231	4C12P-1.231
	1-15/64	1.2344	31.35	3/16	452H-1.234	4C22P-1.234	4C12P-1.234
	—	1.2402	31.50	3/16	452H-31.5	4C22P-31.5	4C12P-31.5
	1-1/4	1.2500	31.75	3/16	452H-0108	4C22P-0108	4C12P-0108
	—	1.2598	32.00	3/16	452H-32	4C22P-32	4C12P-32
	—	1.2795	32.50	3/16	452H-32.5	4C22P-32.5	4C12P-32.5
	1-9/32	1.2813	32.55	3/16	452H-0109	4C22P-0109	4C12P-0109
	—	1.2992	33.00	3/16	452H-33	4C22P-33	4C12P-33
	1-5/16	1.3125	33.34	3/16	452H-0110	4C22P-0110	4C12P-0110
	—	1.3189	33.50	3/16	452H-33.5	4C22P-33.5	4C12P-33.5
	—	1.3386	34.00	3/16	452H-34	4C22P-34	4C12P-34
	1-11/32	1.3438	34.13	3/16	452H-0111	4C22P-0111	4C12P-0111
	—	1.3583	34.50	3/16	452H-34.5	4C22P-34.5	4C12P-34.5
	1-3/8	1.3750	34.93	3/16	452H-0112	4C22P-0112	4C12P-0112
	—	1.3780	35.00	3/16	452H-35	4C22P-35	4C12P-35

NOTE: 2.5 series inserts fit into both 2 and 2.5 series holders. However, 2 series inserts ONLY fit into 2 series holders. See page A30: 7 for visual.

Inserts sold in quantities of 2.

A30: 112 - 143

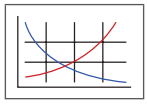

Key on A30: 1

A30: 68 - 72

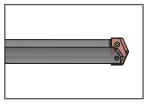

A30: 4 - 6

Coatings not listed above can be supplied as nonstocked standards. Process fees apply.

TiN = 452T-XXXX	TiAlN = 452A-XXXX
TiCN = 452N-XXXX	AM200® = 452H-XXXX

T-A® Drill Inserts

2 Series | HSS | Diameter Range: 0.961" - 1.380" (24.41 mm - 35.05 mm)

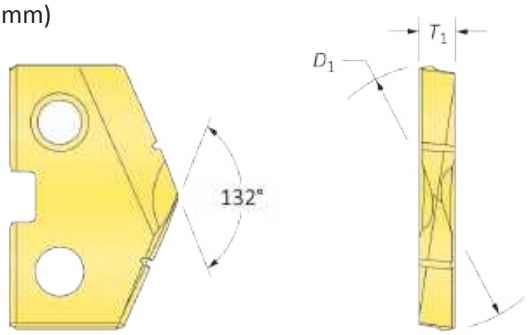

HSS Inserts – Premium Cobalt

Series	Insert: Fractional Equivalent	Insert: D_1 inch	Insert: D_1 mm	Insert: T_1	Part No. TiN	Part No. TiAlN	Part No. TiCN
2	—	0.9646	24.50	3/16	**182T-24.5**	**182A-24.5**	**182N-24.5**
	31/32	0.9688	24.61	3/16	**182T-0031**	**182A-0031**	**182N-0031**
	—	0.9760	24.79	3/16	**182T-.976**	**182A-.976**	**182N-.976**
	63/64	0.9843	25.00	3/16	**182T-25**	**182A-25**	**182N-25**
	1	1.0000	25.40	3/16	**182T-0100**	**182A-0100**	**182N-0100**
	—	1.0039	25.50	3/16	**182T-25.5**	**182A-25.5**	**182N-25.5**
	1-1/64	1.0156	25.80	3/16	**182T-1.015**	**182A-1.015**	**182N-1.015**
	—	1.0236	26.00	3/16	**182T-26**	**182A-26**	**182N-26**
	1-1/32	1.0313	26.20	3/16	**182T-0101**	**182A-0101**	**182N-0101**
	—	1.0433	26.50	3/16	**182T-26.5**	**182A-26.5**	**182N-26.5**
	1-3/64	1.0469	26.59	3/16	**182T-1.046**	**182A-1.046**	**182N-1.046**
	1-1/16	1.0625	26.99	3/16	**182T-0102**	**182A-0102**	**182N-0102**
	—	1.0630	27.00	3/16	**182T-27**	**182A-27**	**182N-27**
	—	1.0827	27.50	3/16	**182T-27.5**	**182A-27.5**	**182N-27.5**
	1-3/32	1.0938	27.78	3/16	**182T-0103**	**182A-0103**	**182N-0103**
	—	1.1024	28.00	3/16	**182T-28**	**182A-28**	**182N-28**
	1-7/64	1.1094	28.18	3/16	**182T-1.109**	**182A-1.109**	**182N-1.109**
	—	1.1220	28.50	3/16	**182T-28.5**	**182A-28.5**	**182N-28.5**
	1-1/8	1.1250	28.58	3/16	**182T-0104**	**182A-0104**	**182N-0104**
	—	1.1417	29.00	3/16	**182T-29**	**182A-29**	**182N-29**
	1-5/32	1.1563	29.37	3/16	**182T-0105**	**182A-0105**	**182N-0105**
	—	1.1614	29.50	3/16	**182T-29.5**	**182A-29.5**	**182N-29.5**
	—	1.1811	30.00	3/16	**182T-30**	**182A-30**	**182N-30**
2.5	1-3/16	1.1875	30.16	3/16	**182T-0106**	**182A-0106**	**182N-0106**
	—	1.2008	30.50	3/16	**182T-30.5**	**182A-30.5**	**182N-30.5**
	1-7/32	1.2188	30.96	3/16	**182T-0107**	**182A-0107**	**182N-0107**
	—	1.2205	31.00	3/16	**182T-31**	**182A-31**	**182N-31**
	—	1.2260	31.14	3/16	**182T-1.226**	**182A-1.226**	**182N-1.226**
	—	1.2310	31.27	3/16	**182T-1.231**	**182A-1.231**	**182N-1.231**
	1-15/64	1.2344	31.35	3/16	**182T-1.234**	**182A-1.234**	**182N-1.234**
	—	1.2402	31.50	3/16	**182T-31.5**	**182A-31.5**	**182N-31.5**
	1-1/4	1.2500	31.75	3/16	**182T-0108**	**182A-0108**	**182N-0108**
	—	1.2598	32.00	3/16	**182T-32**	**182A-32**	**182N-32**
	—	1.2795	32.50	3/16	**182T-32.5**	**182A-32.5**	**182N-32.5**
	1-9/32	1.2813	32.55	3/16	**182T-0109**	**182A-0109**	**182N-0109**
	—	1.2992	33.00	3/16	**182T-33**	**182A-33**	**182N-33**
	1-5/16	1.3125	33.34	3/16	**182T-0110**	**182A-0110**	**182N-0110**
	—	1.3189	33.50	3/16	**182T-33.5**	**182A-33.5**	**182N-33.5**
	—	1.3386	34.00	3/16	**182T-34**	**182A-34**	**182N-34**
	1-11/32	1.3438	34.13	3/16	**182T-0111**	**182A-0111**	**182N-0111**
	—	1.3583	34.50	3/16	**182T-34.5**	**182A-34.5**	**182N-34.5**
	1-3/8	1.3750	34.93	3/16	**182T-0112**	**182A-0112**	**182N-0112**
	—	1.3780	35.00	3/16	**182T-35**	**182A-35**	**182N-35**

NOTE: 2.5 series inserts fit into both 2 and 2.5 series holders. However, 2 series inserts ONLY fit into 2 series holders. See page A30: 7 for visual.

Inserts sold in quantities of 2.

A30: 112 - 143

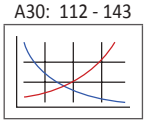

Key on A30: 1

A30: 68 - 72

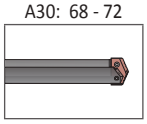

A30: 4 - 6

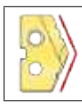

HI, HR, CR, TC, SK, NP, IN, RN, CN, AN, BR, CI, CP, NC, WC

Coatings not listed above can be supplied as nonstocked standards. Process fees apply.

TiN = 182T-XXXX	**TiAlN** = 182A-XXXX
TiCN = 182N-XXXX	**AM200®** = 182H-XXXX

T-A® Drill Inserts

2 Series | HSS | Diameter Range: 0.961" - 1.380" (24.41 mm - 35.05 mm)

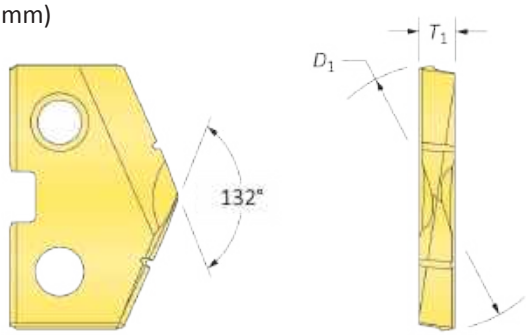

HSS Inserts – Super Cobalt

Series	Insert: Fractional Equivalent	Insert: D_1 inch	Insert: D_1 mm	Insert: T_1	Part No. TiN	Part No. TiAlN	Part No. TiCN
2	—	0.9646	24.50	3/16	**152T-24.5**	**152A-24.5**	**152N-24.5**
	31/32	0.9688	24.61	3/16	**152T-0031**	**152A-0031**	**152N-0031**
	—	0.9760	24.79	3/16	**152T-.976**	**152A-.976**	**152N-.976**
	63/64	0.9843	25.00	3/16	**152T-25**	**152A-25**	**152N-25**
	1	1.0000	25.40	3/16	**152T-0100**	**152A-0100**	**152N-0100**
	—	1.0039	25.50	3/16	**152T-25.5**	**152A-25.5**	**152N-25.5**
	1-1/64	1.0156	25.80	3/16	**152T-1.015**	**152A-1.015**	**152N-1.015**
	—	1.0236	26.00	3/16	**152T-26**	**152A-26**	**152N-26**
	1-1/32	1.0313	26.20	3/16	**152T-0101**	**152A-0101**	**152N-0101**
	—	1.0433	26.50	3/16	**152T-26.5**	**152A-26.5**	**152N-26.5**
	1-3/64	1.0469	26.59	3/16	**152T-1.046**	**152A-1.046**	**152N-1.046**
	1-1/16	1.0625	26.99	3/16	**152T-0102**	**152A-0102**	**152N-0102**
	—	1.0630	27.00	3/16	**152T-27**	**152A-27**	**152N-27**
	—	1.0827	27.50	3/16	**152T-27.5**	**152A-27.5**	**152N-27.5**
	1-3/32	1.0938	27.78	3/16	**152T-0103**	**152A-0103**	**152N-0103**
	—	1.1024	28.00	3/16	**152T-28**	**152A-28**	**152N-28**
	1-7/64	1.1094	28.18	3/16	**152T-1.109**	**152A-1.109**	**152N-1.109**
	—	1.1220	28.50	3/16	**152T-28.5**	**152A-28.5**	**152N-28.5**
	1-1/8	1.1250	28.58	3/16	**152T-0104**	**152A-0104**	**152N-0104**
	—	1.1417	29.00	3/16	**152T-29**	**152A-29**	**152N-29**
	1-5/32	1.1563	29.37	3/16	**152T-0105**	**152A-0105**	**152N-0105**
	—	1.1614	29.50	3/16	**152T-29.5**	**152A-29.5**	**152N-29.5**
	—	1.1811	30.00	3/16	**152T-30**	**152A-30**	**152N-30**
2.5	1-3/16	1.1875	30.16	3/16	**152T-0106**	**152A-0106**	**152N-0106**
	—	1.2008	30.50	3/16	**152T-30.5**	**152A-30.5**	**152N-30.5**
	1-7/32	1.2188	30.96	3/16	**152T-0107**	**152A-0107**	**152N-0107**
	—	1.2205	31.00	3/16	**152T-31**	**152A-31**	**152N-31**
	—	1.2260	31.14	3/16	**152T-1.226**	**152A-1.226**	**152N-1.226**
	—	1.2310	31.27	3/16	**152T-1.231**	**152A-1.231**	**152N-1.231**
	1-15/64	1.2344	31.35	3/16	**152T-1.234**	**152A-1.234**	**152N-1.234**
	—	1.2402	31.50	3/16	**152T-31.5**	**152A-31.5**	**152N-31.5**
	1-1/4	1.2500	31.75	3/16	**152T-0108**	**152A-0108**	**152N-0108**
	—	1.2598	32.00	3/16	**152T-32**	**152A-32**	**152N-32**
	—	1.2795	32.50	3/16	**152T-32.5**	**152A-32.5**	**152N-32.5**
	1-9/32	1.2813	32.55	3/16	**152T-0109**	**152A-0109**	**152N-0109**
	—	1.2992	33.00	3/16	**152T-33**	**152A-33**	**152N-33**
	1-5/16	1.3125	33.34	3/16	**152T-0110**	**152A-0110**	**152N-0110**
	—	1.3189	33.50	3/16	**152T-33.5**	**152A-33.5**	**152N-33.5**
	—	1.3386	34.00	3/16	**152T-34**	**152A-34**	**152N-34**
	1-11/32	1.3438	34.13	3/16	**152T-0111**	**152A-0111**	**152N-0111**
	—	1.3583	34.50	3/16	**152T-34.5**	**152A-34.5**	**152N-34.5**
	1-3/8	1.3750	34.93	3/16	**152T-0112**	**152A-0112**	**152N-0112**
	—	1.3780	35.00	3/16	**152T-35**	**152A-35**	**152N-35**

NOTE: 2.5 series inserts fit into both 2 and 2.5 series holders. However, 2 series inserts ONLY fit into 2 series holders. See page A30: 7 for visual.

A30: 112 - 143

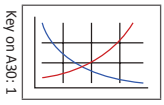

A30: 68 - 72

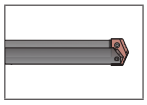

A30: 4 - 6

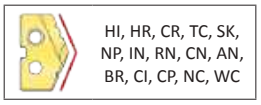

Inserts sold in quantities of 2.

Coatings not listed above can be supplied as nonstocked standards. Process fees apply.

TiN = 152T-XXXX	**TiAlN** = 152A-XXXX
TiCN = 152N-XXXX	**AM200®** = 152H-XXXX

T-A® Drill Inserts

2 Series | HSS | Diameter Range: 0.961" - 1.380" (24.41 mm - 35.05 mm)

90° Spot & Chamfer

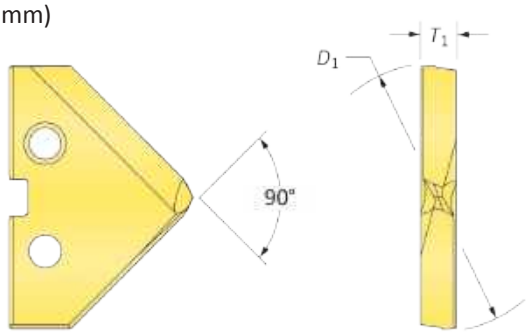

HSS Inserts – Super Cobalt

Series	Insert: Fractional Equivalent	Insert: D_1 inch	Insert: D_1 mm	Insert: T_1	90° Spot & Chamfer Part No.: TiN	TiAlN	TiCN
2	—	0.9646	24.50	3/16	**152T-24.5-SP**	**152A-24.5-SP**	**152N-24.5-SP**
	31/32	0.9688	24.61	3/16	**152T-0031-SP**	**152A-0031-SP**	**152N-0031-SP**
	—	0.9760	24.79	3/16	**152T-.976-SP**	**152A-.976-SP**	**152N-.976-SP**
	63/64	0.9843	25.00	3/16	**152T-25-SP**	**152A-25-SP**	**152N-25-SP**
	1	1.0000	25.40	3/16	**152T-0100-SP**	**152A-0100-SP**	**152N-0100-SP**
	—	1.0039	25.50	3/16	**152T-25.5-SP**	**152A-25.5-SP**	**152N-25.5-SP**
	1-1/64	1.0156	25.80	3/16	**152T-1.015-SP**	**152A-1.015-SP**	**152N-1.015-SP**
	—	1.0236	26.00	3/16	**152T-26-SP**	**152A-26-SP**	**152N-26-SP**
	1-1/32	1.0313	26.20	3/16	**152T-0101-SP**	**152A-0101-SP**	**152N-0101-SP**
	—	1.0433	26.50	3/16	**152T-26.5-SP**	**152A-26.5-SP**	**152N-26.5-SP**
	1-3/64	1.0469	26.59	3/16	**152T-1.046-SP**	**152A-1.046-SP**	**152N-1.046-SP**
	1-1/16	1.0625	26.99	3/16	**152T-0102-SP**	**152A-0102-SP**	**152N-0102-SP**
	—	1.0630	27.00	3/16	**152T-27-SP**	**152A-27-SP**	**152N-27-SP**
	—	1.0827	27.50	3/16	**152T-27.5-SP**	**152A-27.5-SP**	**152N-27.5-SP**
	1-3/32	1.0938	27.78	3/16	**152T-0103-SP**	**152A-0103-SP**	**152N-0103-SP**
	—	1.1024	28.00	3/16	**152T-28-SP**	**152A-28-SP**	**152N-28-SP**
	1-7/64	1.1094	28.18	3/16	**152T-1.109-SP**	**152A-1.109-SP**	**152N-1.109-SP**
	—	1.1220	28.50	3/16	**152T-28.5-SP**	**152A-28.5-SP**	**152N-28.5-SP**
	1-1/8	1.1250	28.58	3/16	**152T-0104-SP**	**152A-0104-SP**	**152N-0104-SP**
	—	1.1417	29.00	3/16	**152T-29-SP**	**152A-29-SP**	**152N-29-SP**
	1-5/32	1.1563	29.37	3/16	**152T-0105-SP**	**152A-0105-SP**	**152N-0105-SP**
	—	1.1614	29.50	3/16	**152T-29.5-SP**	**152A-29.5-SP**	**152N-29.5-SP**
	—	1.1811	30.00	3/16	**152T-30-SP**	**152A-30-SP**	**152N-30-SP**
2.5	1-3/16	1.1875	30.16	3/16	**152T-0106-SP**	**152A-0106-SP**	**152N-0106-SP**
	—	1.2008	30.50	3/16	**152T-30.5-SP**	**152A-30.5-SP**	**152N-30.5-SP**
	1-7/32	1.2188	30.96	3/16	**152T-0107-SP**	**152A-0107-SP**	**152N-0107-SP**
	—	1.2205	31.00	3/16	**152T-31-SP**	**152A-31-SP**	**152N-31-SP**
	—	1.2260	31.14	3/16	**152T-1.226-SP**	**152A-1.226-SP**	**152N-1.226-SP**
	—	1.2310	31.27	3/16	**152T-1.231-SP**	**152A-1.231-SP**	**152N-1.231-SP**
	1-15/64	1.2344	31.35	3/16	**152T-1.234-SP**	**152A-1.234-SP**	**152N-1.234-SP**
	—	1.2402	31.50	3/16	**152T-31.5-SP**	**152A-31.5-SP**	**152N-31.5-SP**
	1-1/4	1.2500	31.75	3/16	**152T-0108-SP**	**152A-0108-SP**	**152N-0108-SP**
	—	1.2598	32.00	3/16	**152T-32-SP**	**152A-32-SP**	**152N-32-SP**
	—	1.2795	32.50	3/16	**152T-32.5-SP**	**152A-32.5-SP**	**152N-32.5-SP**
	1-9/32	1.2813	32.55	3/16	**152T-0109-SP**	**152A-0109-SP**	**152N-0109-SP**
	—	1.2992	33.00	3/16	**152T-33-SP**	**152A-33-SP**	**152N-33-SP**
	1-5/16	1.3125	33.34	3/16	**152T-0110-SP**	**152A-0110-SP**	**152N-0110-SP**
	—	1.3189	33.50	3/16	**152T-33.5-SP**	**152A-33.5-SP**	**152N-33.5-SP**
	—	1.3386	34.00	3/16	**152T-34-SP**	**152A-34-SP**	**152N-34-SP**
	1-11/32	1.3438	34.13	3/16	**152T-0111-SP**	**152A-0111-SP**	**152N-0111-SP**
	—	1.3583	34.50	3/16	**152T-34.5-SP**	**152A-34.5-SP**	**152N-34.5-SP**
	1-3/8	1.3750	34.93	3/16	**152T-0112-SP**	**152A-0112-SP**	**152N-0112-SP**
	—	1.3780	35.00	3/16	**152T-35-SP**	**152A-35-SP**	**152N-35-SP**

NOTE: 2.5 series inserts fit into both 2 and 2.5 series holders. However, 2 series inserts ONLY fit into 2 series holders. See page A30: 7 for visual.

A30: 112 - 143

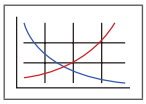

Key on A30: 1

A30: 68 - 72

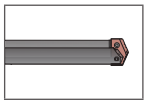

A30: 4 - 6

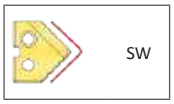

Inserts sold in quantities of 2.

Coatings not listed above can be supplied as nonstocked standards. Process fees apply.

TiN = 152T-XXXX	**TiAlN** = 152A-XXXX
TiCN = 152N-XXXX	**AM200®** = 152H-XXXX

T-A® Drill Inserts

2 Series | HSS | Diameter Range: 0.961" - 1.380" (24.41 mm - 35.05 mm)

Flat Bottom

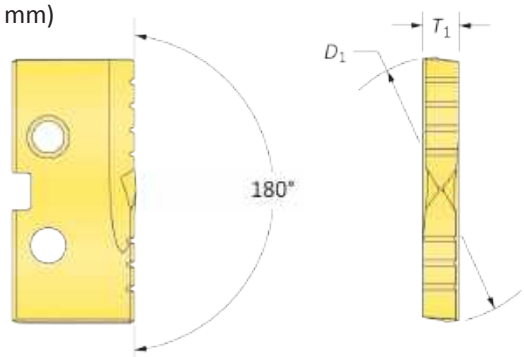

HSS Inserts – Super Cobalt

Series	Insert: Fractional Equivalent	Insert: D_1 inch	Insert: D_1 mm	Insert: T_1	Flat Bottom Part No. TiN
2	—	0.9646	24.50	3/16	**152T-24.5-FB**
	31/32	0.9688	24.61	3/16	**152T-0031-FB**
	—	0.9760	24.79	3/16	**152T-.976-FB**
	63/64	0.9843	25.00	3/16	**152T-25-FB**
	1	1.0000	25.40	3/16	**152T-0100-FB**
	—	1.0039	25.50	3/16	**152T-25.5-FB**
	1-1/64	1.0156	25.80	3/16	**152T-1.015-FB**
	—	1.0236	26.00	3/16	**152T-26-FB**
	1-1/32	1.0313	26.20	3/16	**152T-0101-FB**
	—	1.0433	26.50	3/16	**152T-26.5-FB**
	1-3/64	1.0469	26.59	3/16	**152T-1.046-FB**
	1-1/16	1.0625	26.99	3/16	**152T-0102-FB**
	—	1.0630	27.00	3/16	**152T-27-FB**
	—	1.0827	27.50	3/16	**152T-27.5-FB**
	1-3/32	1.0938	27.78	3/16	**152T-0103-FB**
	—	1.1024	28.00	3/16	**152T-28-FB**
	1-7/64	1.1094	28.18	3/16	**152T-1.109-FB**
	—	1.1220	28.50	3/16	**152T-28.5-FB**
	1-1/8	1.1250	28.58	3/16	**152T-0104-FB**
	—	1.1417	29.00	3/16	**152T-29-FB**
	1-5/32	1.1563	29.37	3/16	**152T-0105-FB**
	—	1.1614	29.50	3/16	**152T-29.5-FB**
	—	1.1811	30.00	3/16	**152T-30-FB**
2.5	1-3/16	1.1875	30.16	3/16	**152T-0106-FB**
	—	1.2008	30.50	3/16	**152T-30.5-FB**
	1-7/32	1.2188	30.96	3/16	**152T-0107-FB**
	—	1.2205	31.00	3/16	**152T-31-FB**
	—	1.2260	31.14	3/16	**152T-1.226-FB**
	—	1.2310	31.27	3/16	**152T-1.231-FB**
	1-15/64	1.2344	31.35	3/16	**152T-1.234-FB**
	—	1.2402	31.50	3/16	**152T-31.5-FB**
	1-1/4	1.2500	31.75	3/16	**152T-0108-FB**
	—	1.2598	32.00	3/16	**152T-32-FB**
	—	1.2795	32.50	3/16	**152T-32.5-FB**
	1-9/32	1.2813	32.55	3/16	**152T-0109-FB**
	—	1.2992	33.00	3/16	**152T-33-FB**
	1-5/16	1.3125	33.34	3/16	**152T-0110-FB**
	—	1.3189	33.50	3/16	**152T-33.5-FB**
	—	1.3386	34.00	3/16	**152T-34-FB**
	1-11/32	1.3438	34.13	3/16	**152T-0111-FB**
	—	1.3583	34.50	3/16	**152T-34.5-FB**
	1-3/8	1.3750	34.93	3/16	**152T-0112-FB**
	—	1.3780	35.00	3/16	**152T-35-FB**

NOTE: 2.5 series inserts fit into both 2 and 2.5 series holders. However, 2 series inserts ONLY fit into 2 series holders. See page A30: 7 for visual.

A30: 112 - 143

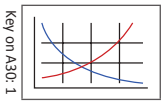

A30: 68 - 72

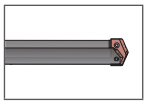

A30: 4 - 6

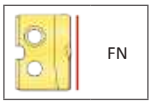

Inserts sold in quantities of 2.

Coatings not listed above can be supplied as nonstocked standards. Process fees apply.

TiN = 152T-XXXX	**TiAlN** = 152A-XXXX
TiCN = 152N-XXXX	**AM200®** = 152H-XXXX

T-A® Drill Inserts

2 Series | HSS | Diameter Range: 0.961" - 1.380" (24.41 mm - 35.05 mm)

Tube Sheet

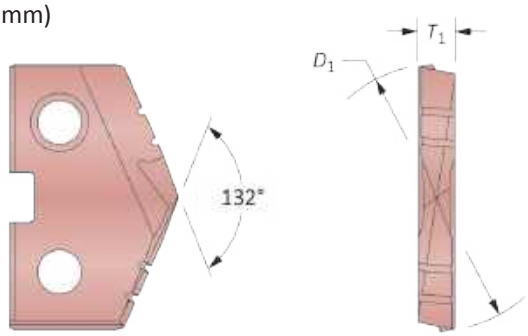

HSS Inserts – Super Cobalt | HSS

Series	Insert: Fractional Equivalent	Insert: D_1 inch	Insert: D_1 mm	Insert: T_1	Part No.: Super Cobalt	Part No.: HSS
2	—	1.0080	25.60	3/16	**152H-1.0080-IN**	**132H-1.0080-IN**
	1-1/64	1.0156	25.80	3/16	**152H-1.015-IN**	**132H-1.015-IN**
	1-1/32	1.0313	26.20	3/16	**152H-0101-IN**	**132H-0101-IN**

A30: 112 - 143
Key on A30: 1

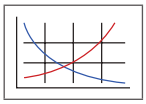

A30: 68 - 72

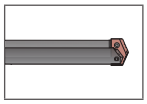

Inserts sold in quantities of 2.

Coatings not listed above can be supplied as nonstocked standards. Process fees apply.

TiN = 152T-XXXX	**TiAlN** = 152A-XXXX
TiCN = 152N-XXXX	**AM200®** = 152H-XXXX

T-A® Drill Inserts

2 Series | HSS | Diameter Range: 0.961" - 1.380" (24.41 mm - 35.05 mm)

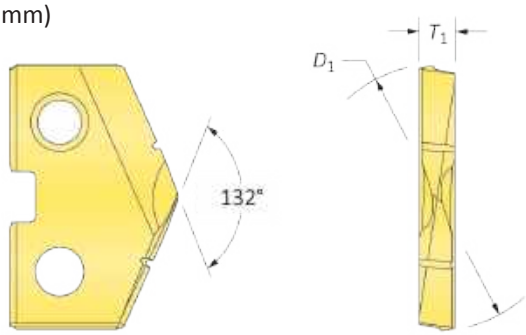

HSS Inserts – HSS

Series	Insert: Fractional Equivalent	Insert: D_1 inch	Insert: D_1 mm	Insert: T_1	Part No. TiN	Part No. TiAlN	Part No. TiCN
2	—	0.9646	24.50	3/16	**132T-24.5**	**132A-24.5**	**132N-24.5**
	31/32	0.9688	24.61	3/16	**132T-0031**	**132A-0031**	**132N-0031**
	—	0.9760	24.79	3/16	**132T-.976**	**132A-.976**	**132N-.976**
	63/64	0.9843	25.00	3/16	**132T-25**	**132A-25**	**132N-25**
	1	1.0000	25.40	3/16	**132T-0100**	**132A-0100**	**132N-0100**
	—	1.0039	25.50	3/16	**132T-25.5**	**132A-25.5**	**132N-25.5**
	1-1/64	1.0156	25.80	3/16	**132T-1.015**	**132A-1.015**	**132N-1.015**
	—	1.0236	26.00	3/16	**132T-26**	**132A-26**	**132N-26**
	1-1/32	1.0313	26.20	3/16	**132T-0101**	**132A-0101**	**132N-0101**
	—	1.0433	26.50	3/16	**132T-26.5**	**132A-26.5**	**132N-26.5**
	1-3/64	1.0469	26.59	3/16	**132T-1.046**	**132A-1.046**	**132N-1.046**
	1-1/16	1.0625	26.99	3/16	**132T-0102**	**132A-0102**	**132N-0102**
	—	1.0630	27.00	3/16	**132T-27**	**132A-27**	**132N-27**
	—	1.0827	27.50	3/16	**132T-27.5**	**132A-27.5**	**132N-27.5**
	1-3/32	1.0938	27.78	3/16	**132T-0103**	**132A-0103**	**132N-0103**
	—	1.1024	28.00	3/16	**132T-28**	**132A-28**	**132N-28**
	1-7/64	1.1094	28.18	3/16	**132T-1.109**	**132A-1.109**	**132N-1.109**
	—	1.1220	28.50	3/16	**132T-28.5**	**132A-28.5**	**132N-28.5**
	1-1/8	1.1250	28.58	3/16	**132T-0104**	**132A-0104**	**132N-0104**
	—	1.1417	29.00	3/16	**132T-29**	**132A-29**	**132N-29**
	1-5/32	1.1563	29.37	3/16	**132T-0105**	**132A-0105**	**132N-0105**
	—	1.1614	29.50	3/16	**132T-29.5**	**132A-29.5**	**132N-29.5**
	—	1.1811	30.00	3/16	**132T-30**	**132A-30**	**132N-30**
2.5	1-3/16	1.1875	30.16	3/16	**132T-0106**	**132A-0106**	**132N-0106**
	—	1.2008	30.50	3/16	**132T-30.5**	**132A-30.5**	**132N-30.5**
	1-7/32	1.2188	30.96	3/16	**132T-0107**	**132A-0107**	**132N-0107**
	—	1.2205	31.00	3/16	**132T-31**	**132A-31**	**132N-31**
	—	1.2260	31.14	3/16	**132T-1.226**	**132A-1.226**	**132N-1.226**
	—	1.2310	31.27	3/16	**132T-1.231**	**132A-1.231**	**132N-1.231**
	1-15/64	1.2344	31.35	3/16	**132T-1.234**	**132A-1.234**	**132N-1.234**
	—	1.2402	31.50	3/16	**132T-31.5**	**132A-31.5**	**132N-31.5**
	1-1/4	1.2500	31.75	3/16	**132T-0108**	**132A-0108**	**132N-0108**
	—	1.2598	32.00	3/16	**132T-32**	**132A-32**	**132N-32**
	—	1.2795	32.50	3/16	**132T-32.5**	**132A-32.5**	**132N-32.5**
	1-9/32	1.2813	32.55	3/16	**132T-0109**	**132A-0109**	**132N-0109**
	—	1.2992	33.00	3/16	**132T-33**	**132A-33**	**132N-33**
	1-5/16	1.3125	33.34	3/16	**132T-0110**	**132A-0110**	**132N-0110**
	—	1.3189	33.50	3/16	**132T-33.5**	**132A-33.5**	**132N-33.5**
	—	1.3386	34.00	3/16	**132T-34**	**132A-34**	**132N-34**
	1-11/32	1.3438	34.13	3/16	**132T-0111**	**132A-0111**	**132N-0111**
	—	1.3583	34.50	3/16	**132T-34.5**	**132A-34.5**	**132N-34.5**
	1-3/8	1.3750	34.93	3/16	**132T-0112**	**132A-0112**	**132N-0112**
	—	1.3780	35.00	3/16	**132T-35**	**132A-35**	**132N-35**

NOTE: 2.5 series inserts fit into both 2 and 2.5 series holders. However, 2 series inserts ONLY fit into 2 series holders. See page A30: 7 for visual.

A30: 112 - 143

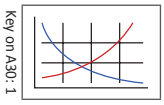

A30: 68 - 72

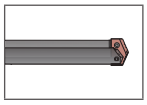

A30: 4 - 6

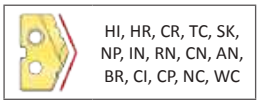

Inserts sold in quantities of 2.

Coatings not listed above can be supplied as nonstocked standards. Process fees apply.

TiN = 132T-XXXX	**TiAlN** = 132A-XXXX
TiCN = 132N-XXXX	**AM200®** = 132H-XXXX

T-A® Drill Inserts

2 Series | Carbide | Diameter Range: 0.961" - 1.380" (24.41 mm - 35.05 mm)

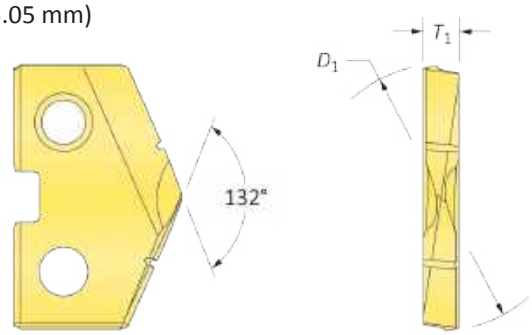

Carbide Inserts – C2 (K20)

Series	Fractional Equivalent	Insert D_1 inch	Insert D_1 mm	Insert T_1	Part No. TiN	Part No. TiAlN
2	—	0.9646	24.50	3/16	**1C22T-24.5**	**1C22A-24.5**
	31/32	0.9688	24.61	3/16	**1C22T-0031**	**1C22A-0031**
	—	0.9760	24.79	3/16	**1C22T-.976**	**1C22A-.976**
	63/64	0.9843	25.00	3/16	**1C22T-25**	**1C22A-25**
	1	1.0000	25.40	3/16	**1C22T-0100**	**1C22A-0100**
	—	1.0039	25.50	3/16	**1C22T-25.5**	**1C22A-25.5**
	1-1/64	1.0156	25.80	3/16	**1C22T-1.015**	**1C22A-1.015**
	—	1.0236	26.00	3/16	**1C22T-26**	**1C22A-26**
	1-1/32	1.0313	26.20	3/16	**1C22T-0101**	**1C22A-0101**
	—	1.0433	26.50	3/16	**1C22T-26.5**	**1C22A-26.5**
	1-3/64	1.0469	26.59	3/16	**1C22T-1.046**	**1C22A-1.046**
	1-1/16	1.0625	26.99	3/16	**1C22T-0102**	**1C22A-0102**
	—	1.0630	27.00	3/16	**1C22T-27**	**1C22A-27**
	—	1.0827	27.50	3/16	**1C22T-27.5**	**1C22A-27.5**
	1-3/32	1.0938	27.78	3/16	**1C22T-0103**	**1C22A-0103**
	—	1.1024	28.00	3/16	**1C22T-28**	**1C22A-28**
	1-7/64	1.1094	28.18	3/16	**1C22T-1.109**	**1C22A-1.109**
	—	1.1220	28.50	3/16	**1C22T-28.5**	**1C22A-28.5**
	1-1/8	1.1250	28.58	3/16	**1C22T-0104**	**1C22A-0104**
	—	1.1417	29.00	3/16	**1C22T-29**	**1C22A-29**
	1-5/32	1.1563	29.37	3/16	**1C22T-0105**	**1C22A-0105**
	—	1.1614	29.50	3/16	**1C22T-29.5**	**1C22A-29.5**
	—	1.1811	30.00	3/16	**1C22T-30**	**1C22A-30**
2.5	1-3/16	1.1875	30.16	3/16	**1C22T-0106**	**1C22A-0106**
	—	1.2008	30.50	3/16	**1C22T-30.5**	**1C22A-30.5**
	1-7/32	1.2188	30.96	3/16	**1C22T-0107**	**1C22A-0107**
	—	1.2205	31.00	3/16	**1C22T-31**	**1C22A-31**
	—	1.2260	31.14	3/16	**1C22T-1.226**	**1C22A-1.226**
	—	1.2310	31.27	3/16	**1C22T-1.231**	**1C22A-1.231**
	1-15/64	1.2344	31.35	3/16	**1C22T-1.234**	**1C22A-1.234**
	—	1.2402	31.50	3/16	**1C22T-31.5**	**1C22A-31.5**
	1-1/4	1.2500	31.75	3/16	**1C22T-0108**	**1C22A-0108**
	—	1.2598	32.00	3/16	**1C22T-32**	**1C22A-32**
	—	1.2795	32.50	3/16	**1C22T-32.5**	**1C22A-32.5**
	1-9/32	1.2813	32.55	3/16	**1C22T-0109**	**1C22A-0109**
	—	1.2992	33.00	3/16	**1C22T-33**	**1C22A-33**
	1-5/16	1.3125	33.34	3/16	**1C22T-0110**	**1C22A-0110**
	—	1.3189	33.50	3/16	**1C22T-33.5**	**1C22A-33.5**
	—	1.3386	34.00	3/16	**1C22T-34**	**1C22A-34**
	1-11/32	1.3438	34.13	3/16	**1C22T-0111**	**1C22A-0111**
	—	1.3583	34.50	3/16	**1C22T-34.5**	**1C22A-34.5**
	1-3/8	1.3750	34.93	3/16	**1C22T-0112**	**1C22A-0112**
	—	1.3780	35.00	3/16	**1C22T-35**	**1C22A-35**

NOTE: 2.5 series inserts fit into both 2 and 2.5 series holders. However, 2 series inserts ONLY fit into 2 series holders. See page A30: 7 for visual.

A30: 112 - 143

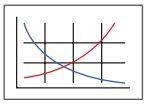

Key on A30: 1

A30: 68 - 72

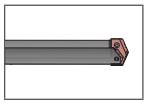

A30: 4 - 6

HI, HR, CR, TC, SK, NP, IN, RN, CN, AN, BR, CI, CP, NC, WC, BT

Inserts sold in quantities of 2.

Coatings not listed above can be supplied as nonstocked standards. Process fees apply.

TiN = 1C22T-XXXX	**TiAlN** = 1C22A-XXXX
TiCN = 1C22N-XXXX	**AM200®** = 1C22H-XXXX

T-A® Drill Inserts

2 Series | Carbide | Diameter Range: 0.961" - 1.380" (24.41 mm - 35.05 mm)

Flat Bottom

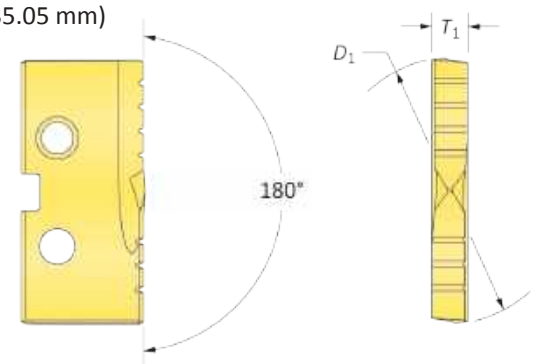

Carbide Inserts – C2 (K20)

Series	Insert: Fractional Equivalent	Insert: D_1 inch	Insert: D_1 mm	Insert: T_1	Flat Bottom Part No. TiN
2	—	0.9646	24.50	3/16	**1C22T-24.5-FB**
	31/32	0.9688	24.61	3/16	**1C22T-0031-FB**
	—	0.9760	24.79	3/16	**1C22T-.976-FB**
	63/64	0.9843	25.00	3/16	**1C22T-25-FB**
	1	1.0000	25.40	3/16	**1C22T-0100-FB**
	—	1.0039	25.50	3/16	**1C22T-25.5-FB**
	1-1/64	1.0156	25.80	3/16	**1C22T-1.015-FB**
	—	1.0236	26.00	3/16	**1C22T-26-FB**
	1-1/32	1.0313	26.20	3/16	**1C22T-0101-FB**
	—	1.0433	26.50	3/16	**1C22T-26.5-FB**
	1-3/64	1.0469	26.59	3/16	**1C22T-1.046-FB**
	1-1/16	1.0625	26.99	3/16	**1C22T-0102-FB**
	—	1.0630	27.00	3/16	**1C22T-27-FB**
	—	1.0827	27.50	3/16	**1C22T-27.5-FB**
	1-3/32	1.0938	27.78	3/16	**1C22T-0103-FB**
	—	1.1024	28.00	3/16	**1C22T-28-FB**
	1-7/64	1.1094	28.18	3/16	**1C22T-1.109-FB**
	—	1.1220	28.50	3/16	**1C22T-28.5-FB**
	1-1/8	1.1250	28.58	3/16	**1C22T-0104-FB**
	—	1.1417	29.00	3/16	**1C22T-29-FB**
	1-5/32	1.1563	29.37	3/16	**1C22T-0105-FB**
	—	1.1614	29.50	3/16	**1C22T-29.5-FB**
	—	1.1811	30.00	3/16	**1C22T-30-FB**
2.5	1-3/16	1.1875	30.16	3/16	**1C22T-0106-FB**
	—	1.2008	30.50	3/16	**1C22T-30.5-FB**
	1-7/32	1.2188	30.96	3/16	**1C22T-0107-FB**
	—	1.2205	31.00	3/16	**1C22T-31-FB**
	—	1.2260	31.14	3/16	**1C22T-1.226-FB**
	—	1.2310	31.27	3/16	**1C22T-1.231-FB**
	1-15/64	1.2344	31.35	3/16	**1C22T-1.234-FB**
	—	1.2402	31.50	3/16	**1C22T-31.5-FB**
	1-1/4	1.2500	31.75	3/16	**1C22T-0108-FB**
	—	1.2598	32.00	3/16	**1C22T-32-FB**
	—	1.2795	32.50	3/16	**1C22T-32.5-FB**
	1-9/32	1.2813	32.55	3/16	**1C22T-0109-FB**
	—	1.2992	33.00	3/16	**1C22T-33-FB**
	1-5/16	1.3125	33.34	3/16	**1C22T-0110-FB**
	—	1.3189	33.50	3/16	**1C22T-33.5-FB**
	—	1.3386	34.00	3/16	**1C22T-34-FB**
	1-11/32	1.3438	34.13	3/16	**1C22T-0111-FB**
	—	1.3583	34.50	3/16	**1C22T-34.5-FB**
	1-3/8	1.3750	34.93	3/16	**1C22T-0112-FB**
	—	1.3780	35.00	3/16	**1C22T-35-FB**

NOTE: 2.5 series inserts fit into both 2 and 2.5 series holders. However, 2 series inserts ONLY fit into 2 series holders. See page A30: 7 for visual.

A30: 112 - 143

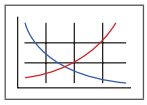

Key on A30: 1

A30: 68 - 72

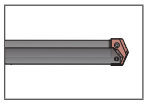

A30: 4 - 6

Inserts sold in quantities of 2.

Coatings not listed above can be supplied as nonstocked standards. Process fees apply.

TiN = 1C22T-XXXX	**TiAlN** = 1C22A-XXXX
TiCN = 1C22N-XXXX	**AM200®** = 1C22H-XXXX

T-A® Drill Inserts

2 Series | Carbide | Diameter Range: 0.961" - 1.380" (24.41 mm - 35.05 mm)

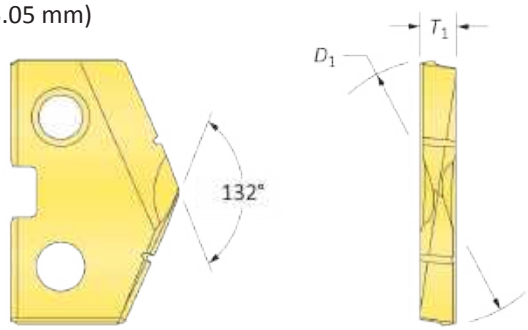

Carbide Inserts – C5 (P40) | C3 (K10) | N2

Series	Insert: Fractional Equivalent	Insert: D_1 inch	Insert: D_1 mm	Insert: T_1	C5 Part No. TiN	C5 Part No. TiAlN	C3 Part No. TiAlN (Cast Iron)	N2 Part No. Diamond Film*
2	—	0.9646	24.50	3/16	**1C52T-24.5**	**1C52A-24.5**	**1C32A-24.5-CI**	**1N22D-24.5**
	31/32	0.9688	24.61	3/16	**1C52T-0031**	**1C52A-0031**	**1C32A-0031-CI**	**1N22D-0031**
	—	0.9760	24.79	3/16	**1C52T-.976**	**1C52A-.976**	**1C32A-.976-CI**	**1N22D-.976**
	63/64	0.9843	25.00	3/16	**1C52T-25**	**1C52A-25**	**1C32A-25-CI**	**1N22D-25**
	1	1.0000	25.40	3/16	**1C52T-0100**	**1C52A-0100**	**1C32A-0100-CI**	**1N22D-0100**
	—	1.0039	25.50	3/16	**1C52T-25.5**	**1C52A-25.5**	**1C32A-25.5-CI**	**1N22D-25.5**
	1-1/64	1.0156	25.80	3/16	**1C52T-1.015**	**1C52A-1.015**	**1C32A-1.015-CI**	**1N22D-1.015**
	—	1.0236	26.00	3/16	**1C52T-26**	**1C52A-26**	**1C32A-26-CI**	**1N22D-26**
	1-1/32	1.0313	26.20	3/16	**1C52T-0101**	**1C52A-0101**	**1C32A-0101-CI**	**1N22D-0101**
	—	1.0433	26.50	3/16	**1C52T-26.5**	**1C52A-26.5**	**1C32A-26.5-CI**	**1N22D-26.5**
	1-3/64	1.0469	26.59	3/16	**1C52T-1.046**	**1C52A-1.046**	**1C32A-1.046-CI**	**1N22D-1.046**
	1-1/16	1.0625	26.99	3/16	**1C52T-0102**	**1C52A-0102**	**1C32A-0102-CI**	**1N22D-0102**
	—	1.0630	27.00	3/16	**1C52T-27**	**1C52A-27**	**1C32A-27-CI**	**1N22D-27**
	—	1.0827	27.50	3/16	**1C52T-27.5**	**1C52A-27.5**	**1C32A-27.5-CI**	**1N22D-27.5**
	1-3/32	1.0938	27.78	3/16	**1C52T-0103**	**1C52A-0103**	**1C32A-0103-CI**	**1N22D-0103**
	—	1.1024	28.00	3/16	**1C52T-28**	**1C52A-28**	**1C32A-28-CI**	**1N22D-28**
	1-7/64	1.1094	28.18	3/16	**1C52T-1.109**	**1C52A-1.109**	**1C32A-1.109-CI**	**1N22D-1.109**
	—	1.1220	28.50	3/16	**1C52T-28.5**	**1C52A-28.5**	**1C32A-28.5-CI**	**1N22D-28.5**
	1-1/8	1.1250	28.58	3/16	**1C52T-0104**	**1C52A-0104**	**1C32A-0104-CI**	**1N22D-0104**
	—	1.1417	29.00	3/16	**1C52T-29**	**1C52A-29**	**1C32A-29-CI**	**1N22D-29**
	1-5/32	1.1563	29.37	3/16	**1C52T-0105**	**1C52A-0105**	**1C32A-0105-CI**	**1N22D-0105**
	—	1.1614	29.50	3/16	**1C52T-29.5**	**1C52A-29.5**	**1C32A-29.5-CI**	**1N22D-29.5**
	—	1.1811	30.00	3/16	**1C52T-30**	**1C52A-30**	**1C32A-30-CI**	**1N22D-30**
2.5	1-3/16	1.1875	30.16	3/16	**1C52T-0106**	**1C52A-0106**	**1C32A-0106-CI**	**1N22D-0106**
	—	1.2008	30.50	3/16	**1C52T-30.5**	**1C52A-30.5**	**1C32A-30.5-CI**	**1N22D-30.5**
	1-7/32	1.2188	30.96	3/16	**1C52T-0107**	**1C52A-0107**	**1C32A-0107-CI**	**1N22D-0107**
	—	1.2205	31.00	3/16	**1C52T-31**	**1C52A-31**	**1C32A-31-CI**	**1N22D-31**
	—	1.2260	31.14	3/16	**1C52T-1.226**	**1C52A-1.226**	**1C32A-1.226-CI**	**1N22D-1.226**
	—	1.2310	31.27	3/16	**1C52T-1.231**	**1C52A-1.231**	**1C32A-1.231-CI**	**1N22D-1.231**
	1-15/64	1.2344	31.35	3/16	**1C52T-1.234**	**1C52A-1.234**	**1C32A-1.234-CI**	**1N22D-1.234**
	—	1.2402	31.50	3/16	**1C52T-31.5**	**1C52A-31.5**	**1C32A-31.5-CI**	**1N22D-31.5**
	1-1/4	1.2500	31.75	3/16	**1C52T-0108**	**1C52A-0108**	**1C32A-0108-CI**	**1N22D-0108**
	—	1.2598	32.00	3/16	**1C52T-32**	**1C52A-32**	**1C32A-32-CI**	**1N22D-32**
	—	1.2795	32.50	3/16	**1C52T-32.5**	**1C52A-32.5**	**1C32A-32.5-CI**	**1N22D-32.5**
	1-9/32	1.2813	32.55	3/16	**1C52T-0109**	**1C52A-0109**	**1C32A-0109-CI**	**1N22D-0109**
	—	1.2992	33.00	3/16	**1C52T-33**	**1C52A-33**	**1C32A-33-CI**	**1N22D-33**
	1-5/16	1.3125	33.34	3/16	**1C52T-0110**	**1C52A-0110**	**1C32A-0110-CI**	**1N22D-0110**
	—	1.3189	33.50	3/16	**1C52T-33.5**	**1C52A-33.5**	**1C32A-33.5-CI**	**1N22D-33.5**
	—	1.3386	34.00	3/16	**1C52T-34**	**1C52A-34**	**1C32A-34-CI**	**1N22D-34**
	1-11/32	1.3438	34.13	3/16	**1C52T-0111**	**1C52A-0111**	**1C32A-0111-CI**	**1N22D-0111**
	—	1.3583	34.50	3/16	**1C52T-34.5**	**1C52A-34.5**	**1C32A-34.5-CI**	**1N22D-34.5**
	1-3/8	1.3750	34.93	3/16	**1C52T-0112**	**1C52A-0112**	**1C32A-0112-CI**	**1N22D-0112**
	—	1.3780	35.00	3/16	**1C52T-35**	**1C52A-35**	**1C32A-35-CI**	**1N22D-35**

NOTE: 2.5 series inserts fit into both 2 and 2.5 series holders. However, 2 series inserts ONLY fit into 2 series holders. See page A30: 7 for visual.

*Diamond Film is only available in standard geometry. For additional geometries, please contact Application Engineering.

Inserts sold in quantities of 2.

A30: 112 - 143

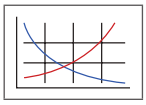

Key on A30: 1

A30: 68 - 72

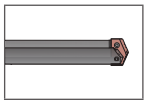

A30: 4 - 6

HI, HR, CR, TC, SK, NP, IN, RN, CN, AN, BR, CI, CP, NC, WC, BT

Coatings not listed above can be supplied as nonstocked standards. Process fees apply.

TiN = 1C52T-XXXX	**TiAlN** = 1C52A-XXXX
TiCN = 1C52N-XXXX	**AM200®** = 1C52H-XXXX

T-A® Drill Insert Holders

2 Series | Flange Shank | Diameter Range: 0.961" - 1.380" (24.41 mm - 35.05 mm)

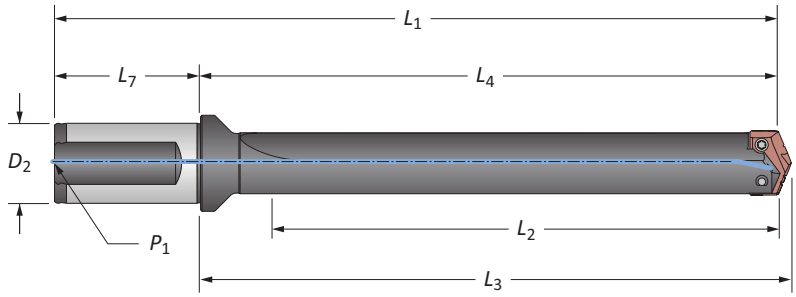

Stub Length

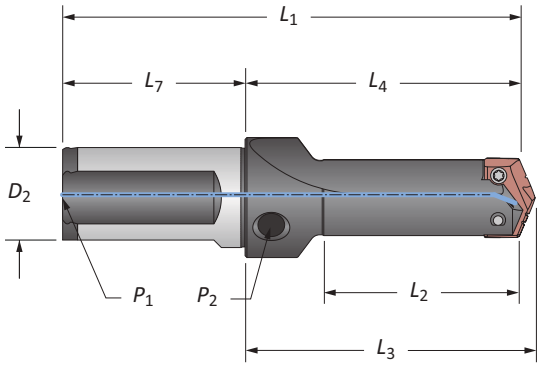

Straight Flute

	Series	Length	Body L_2	Body L_4	Body L_3	Body L_1	Shank D_2	Shank L_7	Shank P_1	Part No.
i	2	Stub	2.500	3.484	3.624	5.764	1-1/4	2.280	1/4 NPT	**21020S-125F**
		Short	3.391	5.063	5.203	7.343	1-1/4	2.280	1/4 NPT	**22020S-125F**
		Intermediate	5.391	7.063	7.203	9.343	1-1/4	2.280	1/4 NPT	**23020S-125F**
		Standard	7.391	9.063	9.203	11.343	1-1/4	2.280	1/4 NPT	**24020S-125F**
		Extended	11.391	13.063	13.203	15.343	1-1/4	2.280	1/4 NPT	⚠ **25020S-125F**
	2.5	Stub	3.959	4.859	4.999	7.139	1-1/4	2.280	1/4 NPT	**21025S-125F**
		Short	3.334	5.063	5.203	7.343	1-1/4	2.280	1/4 NPT	**22025S-125F**
		Intermediate	5.334	7.063	7.203	9.343	1-1/4	2.280	1/4 NPT	**23025S-125F**
		Standard	7.334	9.063	9.203	11.343	1-1/4	2.280	1/4 NPT	**24025S-125F**
		Extended	11.334	13.063	13.203	15.343	1-1/4	2.280	1/4 NPT	⚠ **25025S-125F**
m	2	Stub	63.5	88.5	92.0	148.5	32	60.0	1/4 BSPT	**21020S-32FM**
		Short	86.1	128.6	132.2	188.6	32	60.0	1/4 BSPT	**22020S-32FM**
		XL	511.6	554.1	557.6	614.0	32	60.0	1/4 BSPT	⚠ **27020S-32FM**
		3XL	692.6	735.0	738.6	795.0	32	60.0	1/4 BSPT	⚠ **29020S-32FM**
	2.5	Stub	100.6	123.4	127.0	183.4	32	60.0	1/4 BSPT	**21025S-32FM**
		Short	84.7	128.6	132.2	188.6	32	60.0	1/4 BSPT	**22025S-32FM**

NOTE: Stub length holders have a 1/8" side pipe tap (P_2).
NOTE: 2.5 series inserts fit into both 2 and 2.5 series holders. However, 2 series inserts ONLY fit into 2 series holders. See page A30: 7 for visual.

Connection Accessories

Insert Screws	Nylon Locking Screws	Insert Driver	Preset Torque Hand Driver	Replacement Tips	Admissible Tightening Torque*
7495-IP15-1	7495N-IP15-1	8IP-15	8IP-15TL	8IP-15B	61.0 in-lbs (690 N-cm)

*Tightening torques are calculated with a friction coefficient of μ = 0.14 and develop 90% of ultimate yield strength.

A30: 58 - 67

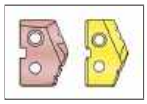

Key on A30: 1

A30: 73 & 111

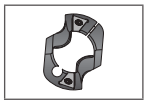

i = Imperial (in)
m = Metric (mm)
Screws sold in quantities of 10.

⚠ **WARNING** Refer to Speed and Feed charts for recommended adjustments to speeds and feeds. Refer to page A30: 146 for deep hole drilling guidelines in this section of the catalog. Visit **www.alliedmachine.com/DeepHoleGuidelines** for the most up-to-date information and procedures. Factory technical assistance is available for your specific applications through our Application Engineering Team.

T-A® Drill Insert Holders

2 Series | Flange Shank | Diameter Range: 0.961" - 1.380" (24.41 mm - 35.05 mm)

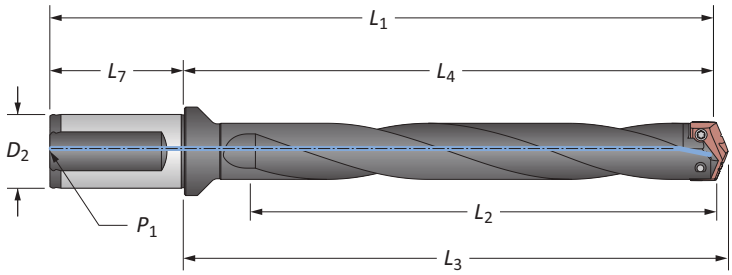

Helical Flute

	Series	Length	Body L_2	Body L_4	Body L_3	Body L_1	Shank D_2	Shank L_7	Shank P_1	Part No.
i	2	Intermediate	6.093	7.063	7.203	9.343	1-1/4	2.280	1/4 NPT	**23020H-125F**
		Standard	8.093	9.063	9.203	11.343	1-1/4	2.280	1/4 NPT	**24020H-125F**
		Standard Plus	10.089	11.059	11.199	13.339	1-1/4	2.280	1/4 NPT	⚠ **24520H-125F**
		Extended	12.093	13.063	13.203	15.343	1-1/4	2.280	1/4 NPT	⚠ **25020H-125F**
		Long	16.861	17.831	17.971	20.111	1-1/4	2.280	1/4 NPT	⚠ **26020H-125F**
	2.5	Intermediate	6.172	7.063	7.203	9.343	1-1/4	2.280	1/4 NPT	**23025H-125F**
		Standard	8.172	9.063	9.203	11.343	1-1/4	2.280	1/4 NPT	**24025H-125F**
		Extended	12.172	13.063	13.203	15.343	1-1/4	2.280	1/4 NPT	⚠ **25025H-125F**
m	2	Intermediate	154.8	179.4	183.0	239.4	32	60.0	1/4 BSPT	**23020H-32FM**
		Standard	205.6	230.2	233.8	290.2	32	60.0	1/4 BSPT	**24020H-32FM**
		Standard Plus	256.3	280.9	284.5	340.9	32	60.0	1/4 BSPT	⚠ **24520H-32FM**
		Extended	307.2	331.8	335.4	391.8	32	60.0	1/4 BSPT	⚠ **25020H-32FM**
		Long	428.3	452.9	456.5	512.9	32	60.0	1/4 BSPT	⚠ **26020H-32FM**
	2.5	Intermediate	156.8	179.4	183.0	239.4	32	60.0	1/4 BSPT	**23025H-32FM**
		Standard	207.6	230.2	233.8	290.2	32	60.0	1/4 BSPT	**24025H-32FM**
		Extended	309.2	331.8	335.4	391.8	32	60.0	1/4 BSPT	⚠ **25025H-32FM**

NOTE: 2.5 series inserts fit into both 2 and 2.5 series holders. However, 2 series inserts ONLY fit into 2 series holders. See page A30: 7 for visual.

Connection Accessories

Insert Screws	Nylon Locking Screws	Insert Driver	Preset Torque Hand Driver	Replacement Tips	Admissible Tightening Torque*
7495-IP15-1	7495N-IP15-1	8IP-15	8IP-15TL	8IP-15B	61.0 in-lbs (690 N-cm)

*Tightening torques are calculated with a friction coefficient of μ = 0.14 and develop 90% of ultimate yield strength.

A30: 58 - 67

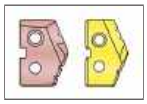

Key on A30: 1

i = Imperial (in)
m = Metric (mm)
Screws sold in quantities of 10.

⚠ **WARNING** Refer to Speed and Feed charts for recommended adjustments to speeds and feeds. Refer to page A30: 146 for deep hole drilling guidelines in this section of the catalog. Visit **www.alliedmachine.com/DeepHoleGuidelines** for the most up-to-date information and procedures. Factory technical assistance is available for your specific applications through our Application Engineering Team.

T-A® Drill Insert Holders

2 Series | Taper Shank | Diameter Range: 0.961" - 1.380" (24.41 mm - 35.05 mm)

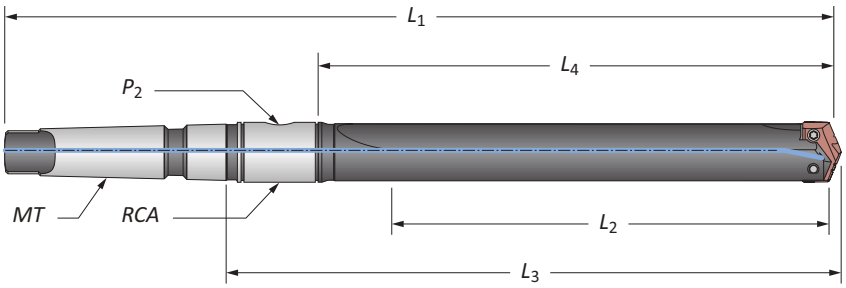

Straight Flute

	Series	Length	Body L_2	Body L_4	Body L_3	Body L_1	Shank *MT**	Shank P_2	Shank RCA	Part No.
i	2	Short	3.229	4.500	6.233	9.781	#3 MT	1/8 NPT	2T-3SR	**22020S-003I**
		Short	3.229	4.500	6.296	10.781	#4 MT	1/8 NPT	2T-3SR	**22020S-004I**
		Intermediate	5.229	6.500	8.296	12.781	#4 MT	1/8 NPT	2T-3SR	**23020S-004I**
		Standard	7.229	8.500	10.233	13.781	#3 MT	1/8 NPT	2T-3SR	**24020S-003I**
		Standard	7.229	8.500	10.296	14.781	#4 MT	1/8 NPT	2T-3SR	**24020S-004I**
		Extended	11.229	12.500	14.296	18.781	#4 MT	1/8 NPT	2T-3SR	⚠ **25020S-004I**
	2.5	Short	3.380	4.500	6.233	9.781	#3 MT	1/8 NPT	2T-3SR	**22025S-003I**
		Short	3.013	4.500	6.577	11.062	#4 MT	1/4 NPT	2T-4SR	**22025S-004I**
		Intermediate	5.013	6.500	8.577	13.062	#4 MT	1/4 NPT	2T-4SR	**23025S-004I**
		Standard	7.380	8.500	10.233	13.781	#3 MT	1/8 NPT	2T-3SR	**24025S-003I**
		Standard	7.013	8.500	10.577	15.062	#4 MT	1/4 NPT	2T-4SR	**24025S-004I**
		Extended	11.013	12.500	14.577	19.062	#4 MT	1/4 NPT	2T-4SR	⚠ **25025S-004I**
m	2	Short	82.0	114.3	159.9	273.8	#4 MT ISO	1/8 BSPT	2T-3SRM	**22020S-004M**
	2.5	Short	76.5	114.3	167.1	281.0	#4 MT ISO	1/4 BSPT	2T-4SRM	**22025S-004M**

*MT ISO 296 type BEK.

NOTE: 2.5 series inserts fit into both 2 and 2.5 series holders. However, 2 series inserts ONLY fit into 2 series holders. See page A30: 7 for visual.

Connection Accessories

Insert Screws	Nylon Locking Screws	Insert Driver	Preset Torque Hand Driver	Replacement Tips	Admissible Tightening Torque*
7495-IP15-1	7495N-IP15-1	8IP-15	8IP-15TL	8IP-15B	61.0 in-lbs (690 N-cm)

*Tightening torques are calculated with a friction coefficient of μ = 0.14 and develop 90% of ultimate yield strength.

A30: 58 - 67

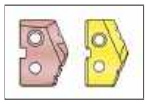

Key on A30: 1

A30: 73 & 110

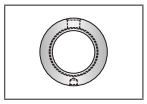

A30: 73 & 111

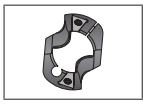

i = Imperial (in)
m = Metric (mm)
Screws sold in quantities of 10.

⚠ **WARNING** Refer to Speed and Feed charts for recommended adjustments to speeds and feeds. Refer to page A30: 146 for deep hole drilling guidelines in this section of the catalog. Visit **www.alliedmachine.com/DeepHoleGuidelines** for the most up-to-date information and procedures. Factory technical assistance is available for your specific applications through our Application Engineering Team.

T-A® Drill Insert Holders

2 Series | Taper Shank | Diameter Range: 0.961" - 1.380" (24.41 mm - 35.05 mm)

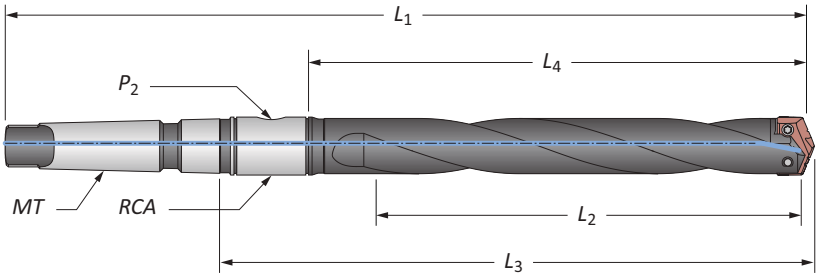

Helical Flute

	Series	Length	Body L_2	Body L_4	Body L_3	Body L_1	Shank MT*	Shank P_2	Shank RCA	Part No.
i	2	Intermediate	5.850	6.500	8.296	12.781	#4 MT	1/8 NPT	2T-3SR	**23020H-004I**
		Standard	7.850	8.500	10.233	13.781	#3 MT	1/8 NPT	2T-3SR	**24020H-003I**
		Standard	7.850	8.500	10.296	14.781	#4 MT	1/8 NPT	2T-3SR	**24020H-004I**
		Extended	11.850	12.500	14.296	18.781	#4 MT	1/8 NPT	2T-3SR	⚠ **25020H-004I**
	2.5	Intermediate	5.781	6.500	8.577	13.062	#4 MT	1/4 NPT	2T-4SR	**23025H-004I**
		Standard	8.016	8.500	10.233	13.781	#3 MT	1/8 NPT	2T-3SR	**24025H-003I**
		Standard	7.781	8.500	10.577	15.062	#4 MT	1/4 NPT	2T-4SR	**24025H-004I**
		Extended	11.781	12.500	14.577	19.062	#4 MT	1/4 NPT	2T-4SR	⚠ **25025H-004I**
m	2	Intermediate	148.6	165.1	210.7	324.6	#4 MT ISO	1/8 BSPT	2T-3SRM	**23020H-004M**
		Standard	199.4	215.9	261.5	375.4	#4 MT ISO	1/8 BSPT	2T-3SRM	**24020H-004M**
		Extended	301.0	317.5	363.1	477.0	#4 MT ISO	1/8 BSPT	2T-3SRM	⚠ **25020H-004M**
	2.5	Intermediate	146.8	165.1	217.9	331.8	#4 MT ISO	1/4 BSPT	2T-4SRM	**23025H-004M**
		Standard	197.6	215.9	268.7	382.6	#4 MT ISO	1/4 BSPT	2T-4SRM	**24025H-004M**
		Extended	299.2	317.5	370.3	484.2	#4 MT ISO	1/4 BSPT	2T-4SRM	⚠ **25025H-004M**

*MT ISO 296 type BEK.

NOTE: 2.5 series inserts fit into both 2 and 2.5 series holders. However, 2 series inserts ONLY fit into 2 series holders. See page A30: 7 for visual.

Connection Accessories

Insert Screws	Nylon Locking Screws	Insert Driver	Preset Torque Hand Driver	Replacement Tips	Admissible Tightening Torque*
7495-IP15-1	7495N-IP15-1	8IP-15	8IP-15TL	8IP-15B	61.0 in-lbs (690 N-cm)

*Tightening torques are calculated with a friction coefficient of μ = 0.14 and develop 90% of ultimate yield strength.

A30: 58 - 67

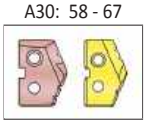

Key on A30: 1

A30: 73 & 110

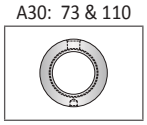

i = Imperial (in)
m = Metric (mm)
Screws sold in quantities of 10.

⚠ **WARNING** Refer to Speed and Feed charts for recommended adjustments to speeds and feeds. Refer to page A30: 146 for deep hole drilling guidelines in this section of the catalog. Visit **www.alliedmachine.com/DeepHoleGuidelines** for the most up-to-date information and procedures. Factory technical assistance is available for your specific applications through our Application Engineering Team.

T-A® Drill Insert Holders

2 Series | Straight Shank | Diameter Range: 0.961" - 1.380" (24.41 mm - 35.05 mm)

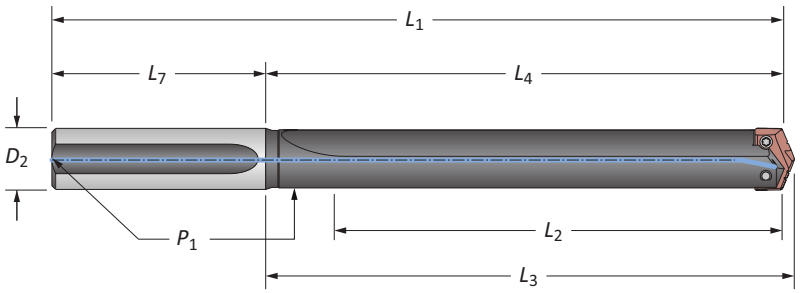

Straight Flute

Series	Length	Body L_2	Body L_4	Body L_3	Body L_1	Shank D_2	Shank L_7	Shank P_1	Part No.
2	Short	3.226	4.500	4.640	8.000	1	3.5000	1/8 NPT	**22020S-100L**
	Short	3.119	4.500	4.640	8.000	1-1/4	3.5000	1/8 NPT	**22020S-125L**
	Intermediate	5.119	6.500	6.640	10.000	1-1/4	3.5000	1/8 NPT	**23020S-125L**
	Standard	7.226	8.500	8.640	12.000	1	3.5000	1/8 NPT	**24020S-100L**
	Standard	7.119	8.500	8.640	12.000	1-1/4	3.5000	1/8 NPT	**24020S-125L**
	Extended	11.119	12.500	12.640	16.000	1-1/4	3.5000	1/8 NPT	⚠ **25020S-125L**
	XL	19.869	21.250	21.390	24.750	1-1/4	3.5000	1/8 NPT	⚠ **27020S-125L**
	3XL	26.994	28.375	28.515	31.875	1-1/4	3.5000	1/8 NPT	⚠ **29020S-125L**
2.5	Short	3.395	4.500	4.640	8.000	1	3.5000	1/8 NPT	**22025S-100L**
	Short	3.015	4.500	4.640	8.000	1-1/4	3.5000	1/8 NPT	**22025S-125L**
	Intermediate	5.015	6.500	6.640	10.000	1-1/4	3.5000	1/8 NPT	**23025S-125L**
	Standard	7.395	8.500	8.640	12.000	1	3.5000	1/8 NPT	**24025S-100L**
	Standard	7.015	8.500	8.640	12.000	1-1/4	3.5000	1/8 NPT	**24025S-125L**
	Extended	11.015	12.500	12.640	16.000	1-1/4	3.5000	1/8 NPT	⚠ **25025S-125L**

NOTE: 2.5 series inserts fit into both 2 and 2.5 series holders. However, 2 series inserts ONLY fit into 2 series holders. See page A30: 7 for visual.

Connection Accessories

Insert Screws	Nylon Locking Screws	Insert Driver	Preset Torque Hand Driver	Replacement Tips	Admissible Tightening Torque*
7495-IP15-1	7495N-IP15-1	8IP-15	8IP-15TL	8IP-15B	61.0 in-lbs (690 N-cm)

*Tightening torques are calculated with a friction coefficient of μ = 0.14 and develop 90% of ultimate yield strength.

A30: 58 - 67

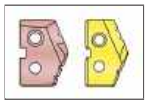

Key on A30: 1

A30: 73 & 111

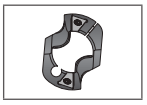

ⓘ = Imperial (in)
ⓜ = Metric (mm)
Screws sold in quantities of 10.

⚠ **WARNING** Refer to Speed and Feed charts for recommended adjustments to speeds and feeds. Refer to page A30: 146 for deep hole drilling guidelines in this section of the catalog. Visit **www.alliedmachine.com/DeepHoleGuidelines** for the most up-to-date information and procedures. Factory technical assistance is available for your specific applications through our Application Engineering Team.

T-A® Drill Accessories

2 Series | Chamfer Rings | Rotary Coolant Adapters | Torx® Plus Screws

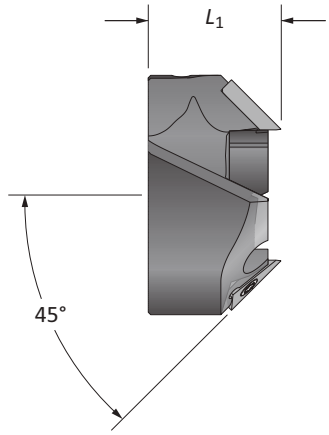

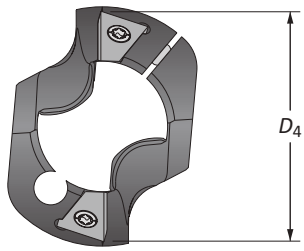

T-ACR 45 Chamfer Ring

Holder Series	D_1 Range	Chamfer Ring D_4	Chamfer Ring L_1	Part No.	Insert Part No.	Insert Screw	Insert Driver	Clamping Screw	Insert Driver
2	0.9610 - 1.3800	1.598	1.000	**T-ACR-45-2**	T-ACRI-45-B-C5A	7255-IP8-1	8IP-8	7514-IP20-1	8IP-20

Rotary Coolant Adapter (RCA) and Accessories

	ID	OD	L_1	Driving Rod Thread	P_1	Part No.	RCA O-Rings Kit Part No.*	RCA O-Rings Replacements
i	1.000	2.125	1.125	5/16" - 18	1/8 NPT	⚠ **2T-3SR**	2T1-3SR	2T1-3OR-10
i	1.250	2.500	1.375	3/8" - 16	1/4 NPT	⚠ **2T-4SR**	2T1-4SR	2T1-4OR-10
m	25.4	54.0	28.6	M8 x 1.25	1/8 BSPT	⚠ **2T-3SRM**	2T1-3SR	2T1-3OR-10
m	31.8	63.5	34.9	M10 x 1.50	1/4 BSPT	⚠ **2T-4SRM**	2T1-4SR	2T1-4OR-10

*RCA Repair Kit includes (2) O-rings, (2) snap rings, and (2) thrust washers.
⚠ Refer to page A30: 110 for proper RCA assembly and safety information.

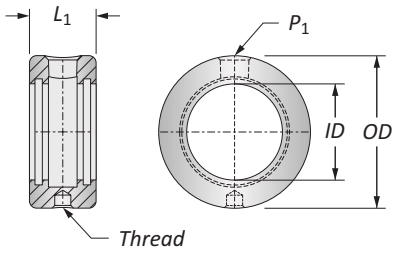

Connection Accessories

Insert Screws	Nylon Locking Screws	Insert Driver	Preset Torque Hand Driver	Replacement Tips	Admissible Tightening Torque*
7495-IP15-1	7495N-IP15-1	8IP-15	8IP-15TL	8IP-15B	61.0 in-lbs (690 N-cm)

*Tightening torques are calculated with a friction coefficient of μ = 0.14 and develop 90% of ultimate yield strength.

A30: 58 - 67

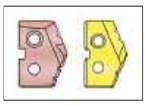

A30: 68 - 72

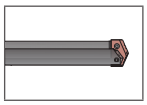

Key on A30: 1

i = Imperial (in)
m = Metric (mm)
Inserts sold separately.
Screws sold in quantities of 10.
O-rings sold in packs of 10.

⚠ **WARNING** RCA rotation during drilling can cause hose and/or hose fitting failure, machinery damage, and/or serious injury. To prevent, use RCA and positive stop studs when drilling. Factory technical assistance is also available for your specific applications.

GEN2 T-A® Drill Inserts

3 Series | HSS | Diameter Range: 1.353" - 1.882" (34.36 mm - 47.80 mm)

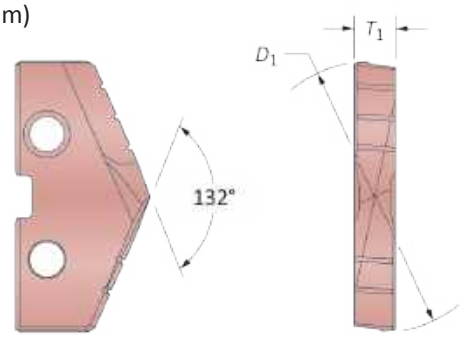

HSS Inserts – Premium Cobalt

Insert				Part No.	
Fractional Equivalent	D_1 inch	D_1 mm	T_1	AM200®	TiN
1-13/32	1.4063	35.72	1/4	**483H-0113**	**483T-0113**
—	1.4173	36.00	1/4	**483H-36**	**483T-36**
1-7/16	1.4375	36.51	1/4	**483H-0114**	**483T-0114**
—	1.4567	37.00	1/4	**483H-37**	**483T-37**
1-15/32	1.4688	37.31	1/4	**483H-0115**	**483T-0115**
—	1.4961	38.00	1/4	**483H-38**	**483T-38**
1-1/2	1.5000	38.10	1/4	**483H-0116**	**483T-0116**
1-17/32	1.5313	38.90	1/4	**483H-0117**	**483T-0117**
—	1.5354	39.00	1/4	**483H-39**	**483T-39**
—	1.5470	39.29	1/4	**483H-1.547**	**483T-1.547**
1-9/16	1.5625	39.69	1/4	**483H-0118**	**483T-0118**
—	1.5748	40.00	1/4	**483H-40**	**483T-40**
1-19/32	1.5938	40.48	1/4	**483H-0119**	**483T-0119**
—	1.6142	41.00	1/4	**483H-41**	**483T-41**
1-5/8	1.6250	41.28	1/4	**483H-0120**	**483T-0120**
—	1.6535	42.00	1/4	**483H-42**	**483T-42**
1-21/32	1.6563	42.07	1/4	**483H-0121**	**483T-0121**
1-11/16	1.6875	42.86	1/4	**483H-0122**	**483T-0122**
—	1.6929	43.00	1/4	**483H-43**	**483T-43**
1-23/32	1.7188	43.66	1/4	**483H-0123**	**483T-0123**
—	1.7323	44.00	1/4	**483H-44**	**483T-44**
1-3/4	1.7500	44.45	1/4	**483H-0124**	**483T-0124**
—	1.7717	45.00	1/4	**483H-45**	**483T-45**
1-25/32	1.7813	45.25	1/4	**483H-0125**	**483T-0125**
—	1.7913	45.50	1/4	**483H-45.5**	**483T-45.5**
—	1.7970	45.64	1/4	**483H-1.797**	**483T-1.797**
—	1.8110	46.00	1/4	**483H-46**	**483T-46**
1-13/16	1.8125	46.04	1/4	**483H-0126**	**483T-0126**
1-27/32	1.8438	46.83	1/4	**483H-0127**	**483T-0127**
—	1.8504	47.00	1/4	**483H-47**	**483T-47**
1-7/8	1.8750	47.63	1/4	**483H-0128**	**483T-0128**

A30: 112 - 143

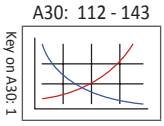

A30: 82 - 85

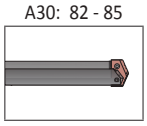

A30: 4 - 6

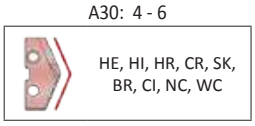

Inserts sold in quantities of 1.

Coatings not listed above can be supplied as nonstocked standards. Process fees apply.

TiN = 483T-XXXX	**TiAlN** = 483A-XXXX
TiCN = 483N-XXXX	**AM200®** = 483H-XXXX

GEN2 T-A® Drill Inserts

3 Series | HSS | Diameter Range: 1.353" - 1.882" (34.36 mm - 47.80 mm)

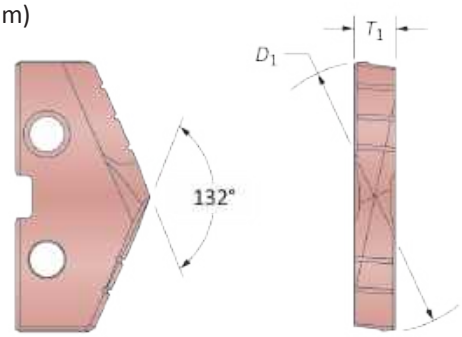

HSS Inserts – Super Cobalt

Insert				Part No.	
Fractional Equivalent	D_1 inch	D_1 mm	T_1	AM200®	TiN
1-13/32	1.4063	35.72	1/4	**453H-0113**	**453T-0113**
—	1.4173	36.00	1/4	**453H-36**	**453T-36**
1-7/16	1.4375	36.51	1/4	**453H-0114**	**453T-0114**
—	1.4567	37.00	1/4	**453H-37**	**453T-37**
1-15/32	1.4688	37.31	1/4	**453H-0115**	**453T-0115**
—	1.4961	38.00	1/4	**453H-38**	**453T-38**
1-1/2	1.5000	38.10	1/4	**453H-0116**	**453T-0116**
1-17/32	1.5313	38.90	1/4	**453H-0117**	**453T-0117**
—	1.5354	39.00	1/4	**453H-39**	**453T-39**
—	1.5470	39.29	1/4	**453H-1.547**	**453T-1.547**
1-9/16	1.5625	39.69	1/4	**453H-0118**	**453T-0118**
—	1.5748	40.00	1/4	**453H-40**	**453T-40**
1-19/32	1.5938	40.48	1/4	**453H-0119**	**453T-0119**
—	1.6142	41.00	1/4	**453H-41**	**453T-41**
1-5/8	1.6250	41.28	1/4	**453H-0120**	**453T-0120**
—	1.6535	42.00	1/4	**453H-42**	**453T-42**
1-21/32	1.6563	42.07	1/4	**453H-0121**	**453T-0121**
1-11/16	1.6875	42.86	1/4	**453H-0122**	**453T-0122**
—	1.6929	43.00	1/4	**453H-43**	**453T-43**
1-23/32	1.7188	43.66	1/4	**453H-0123**	**453T-0123**
—	1.7323	44.00	1/4	**453H-44**	**453T-44**
1-3/4	1.7500	44.45	1/4	**453H-0124**	**453T-0124**
—	1.7717	45.00	1/4	**453H-45**	**453T-45**
1-25/32	1.7813	45.25	1/4	**453H-0125**	**453T-0125**
—	1.7913	45.50	1/4	**453H-45.5**	**453T-45.5**
—	1.7970	45.64	1/4	**453H-1.797**	**453T-1.797**
—	1.8110	46.00	1/4	**453H-46**	**453T-46**
1-13/16	1.8125	46.04	1/4	**453H-0126**	**453T-0126**
1-27/32	1.8438	46.83	1/4	**453H-0127**	**453T-0127**
—	1.8504	47.00	1/4	**453H-47**	**453T-47**
1-7/8	1.8750	47.63	1/4	**453H-0128**	**453T-0128**

A30: 112 - 143
Key on A30: 1

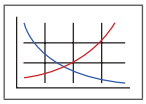

A30: 82 - 85

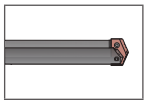

A30: 4 - 6

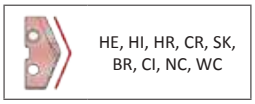

Inserts sold in quantities of 1.

Coatings not listed above can be supplied as nonstocked standards. Process fees apply.

TiN = 483T-XXXX	**TiAlN** = 483A-XXXX
TiCN = 483N-XXXX	**AM200®** = 483H-XXXX

GEN2 T-A® Drill Inserts

3 Series | HSS | Diameter Range: 1.353" - 1.882" (34.36 mm - 47.80 mm)

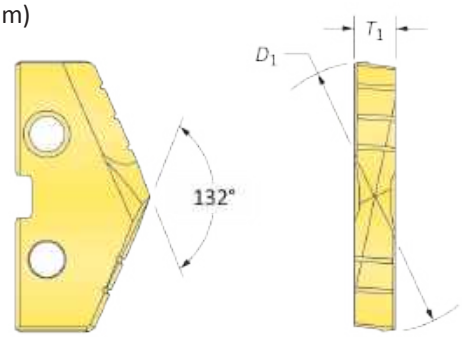

HSS Inserts – HSS

Insert				Part No.
Fractional Equivalent	D_1 inch	D_1 mm	T_1	TiN
1-13/32	1.4063	35.72	1/4	**433T-0113**
—	1.4173	36.00	1/4	**433T-36**
1-7/16	1.4375	36.51	1/4	**433T-0114**
—	1.4567	37.00	1/4	**433T-37**
1-15/32	1.4688	37.31	1/4	**433T-0115**
—	1.4961	38.00	1/4	**433T-38**
1-1/2	1.5000	38.10	1/4	**433T-0116**
1-17/32	1.5313	38.90	1/4	**433T-0117**
—	1.5354	39.00	1/4	**433T-39**
—	1.5470	39.29	1/4	**433T-1.547**
1-9/16	1.5625	39.69	1/4	**433T-0118**
—	1.5748	40.00	1/4	**433T-40**
1-19/32	1.5938	40.48	1/4	**433T-0119**
—	1.6142	41.00	1/4	**433T-41**
1-5/8	1.6250	41.28	1/4	**433T-0120**
—	1.6535	42.00	1/4	**433T-42**
1-21/32	1.6563	42.07	1/4	**433T-0121**
1-11/16	1.6875	42.86	1/4	**433T-0122**
—	1.6929	43.00	1/4	**433T-43**
1-23/32	1.7188	43.66	1/4	**433T-0123**
—	1.7323	44.00	1/4	**433T-44**
1-3/4	1.7500	44.45	1/4	**433T-0124**
—	1.7717	45.00	1/4	**433T-45**
1-25/32	1.7813	45.25	1/4	**433T-0125**
—	1.7913	45.50	1/4	**433T-45.5**
—	1.7970	45.64	1/4	**433T-1.797**
—	1.8110	46.00	1/4	**433T-46**
1-13/16	1.8125	46.04	1/4	**433T-0126**
1-27/32	1.8438	46.83	1/4	**433T-0127**
—	1.8504	47.00	1/4	**433T-47**
1-7/8	1.8750	47.63	1/4	**433T-0128**

A30: 112 - 143
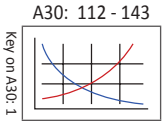
Key on A30: 1

A30: 82 - 85
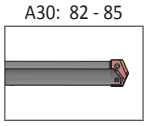

A30: 4 - 6
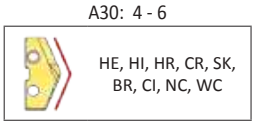

Inserts sold in quantities of 1.

Coatings not listed above can be supplied as nonstocked standards. Process fees apply.

TiN = 433T-XXXX	**TiAlN** = 433A-XXXX
TiCN = 433N-XXXX	**AM200®** = 433H-XXXX

T-A® Drill Inserts

3 Series | HSS | Diameter Range: 1.353" - 1.882" (34.36 mm - 47.80 mm)

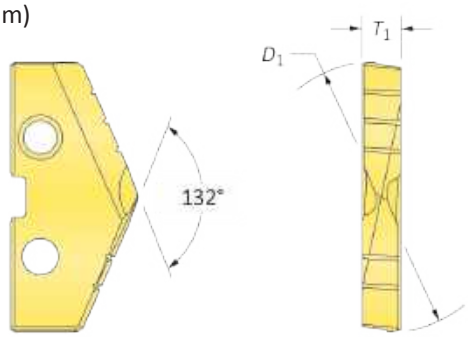

HSS Inserts – Super Cobalt

Insert				Part No.
Fractional Equivalent	D_1 inch	D_1 mm	T_1	TiN
1-13/32	1.4063	35.72	1/4	**153T-0113**
—	1.4173	36.00	1/4	**153T-36**
1-7/16	1.4375	36.51	1/4	**153T-0114**
—	1.4567	37.00	1/4	**153T-37**
1-15/32	1.4688	37.31	1/4	**153T-0115**
—	1.4961	38.00	1/4	**153T-38**
1-1/2	1.5000	38.10	1/4	**153T-0116**
1-17/32	1.5313	38.90	1/4	**153T-0117**
—	1.5354	39.00	1/4	**153T-39**
—	1.5470	39.29	1/4	**153T-1.547**
1-9/16	1.5625	39.69	1/4	**153T-0118**
—	1.5748	40.00	1/4	**153T-40**
1-19/32	1.5938	40.48	1/4	**153T-0119**
—	1.6142	41.00	1/4	**153T-41**
1-5/8	1.6250	41.28	1/4	**153T-0120**
—	1.6535	42.00	1/4	**153T-42**
1-21/32	1.6563	42.07	1/4	**153T-0121**
1-11/16	1.6875	42.86	1/4	**153T-0122**
—	1.6929	43.00	1/4	**153T-43**
1-23/32	1.7188	43.66	1/4	**153T-0123**
—	1.7323	44.00	1/4	**153T-44**
1-3/4	1.7500	44.45	1/4	**153T-0124**
—	1.7717	45.00	1/4	**153T-45**
1-25/32	1.7813	45.25	1/4	**153T-0125**
—	1.7913	45.50	1/4	**153T-45.5**
—	1.7970	45.64	1/4	**153T-1.797**
—	1.8110	46.00	1/4	**153T-46**
1-13/16	1.8125	46.04	1/4	**153T-0126**
1-27/32	1.8438	46.83	1/4	**153T-0127**
—	1.8504	47.00	1/4	**153T-47**
1-7/8	1.8750	47.63	1/4	**153T-0128**

A30: 112 - 143

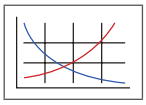

Key on A30: 1

A30: 82 - 85

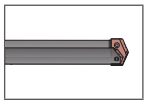

A30: 4 - 6

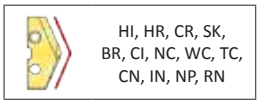

Inserts sold in quantities of 1.

Coatings not listed above can be supplied as nonstocked standards. Process fees apply.

TiN = 153T-XXXX	**TiAlN** = 153A-XXXX
TiCN = 153N-XXXX	**AM200®** = 153H-XXXX

T-A® Drill Inserts

3 Series | HSS | Diameter Range: 1.353" - 1.882" (34.36 mm - 47.80 mm)

90° Spot & Chamfer

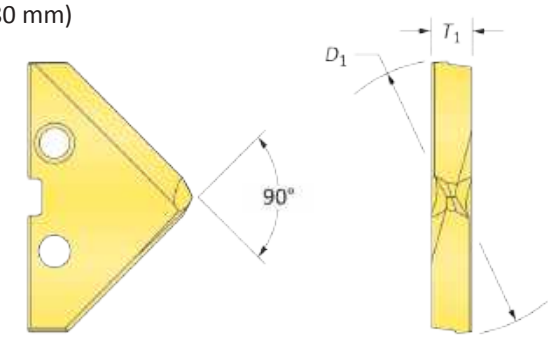

HSS Inserts – Super Cobalt

Insert				Part No.		
Fractional Equivalent	D_1 inch	D_1 mm	T_1	TiN	TiAlN	TiCN
1-13/32	1.4063	35.72	1/4	**153T-0113-SP**	**153A-0113-SP**	**153N-0113-SP**
—	1.4173	36.00	1/4	**153T-36-SP**	**153A-36-SP**	**153N-36-SP**
1-7/16	1.4375	36.51	1/4	**153T-0114-SP**	**153A-0114-SP**	**153N-0114-SP**
—	1.4567	37.00	1/4	**153T-37-SP**	**153A-37-SP**	**153N-37-SP**
1-15/32	1.4688	37.31	1/4	**153T-0115-SP**	**153A-0115-SP**	**153N-0115-SP**
—	1.4961	38.00	1/4	**153T-38-SP**	**153A-38-SP**	**153N-38-SP**
1-1/2	1.5000	38.10	1/4	**153T-0116-SP**	**153A-0116-SP**	**153N-0116-SP**
1-17/32	1.5313	38.90	1/4	**153T-0117-SP**	**153A-0117-SP**	**153N-0117-SP**
—	1.5354	39.00	1/4	**153T-39-SP**	**153A-39-SP**	**153N-39-SP**
—	1.5470	39.29	1/4	**153T-1.547-SP**	**153A-1.547-SP**	**153N-1.547-SP**
1-9/16	1.5625	39.69	1/4	**153T-0118-SP**	**153A-0118-SP**	**153N-0118-SP**
—	1.5748	40.00	1/4	**153T-40-SP**	**153A-40-SP**	**153N-40-SP**
1-19/32	1.5938	40.48	1/4	**153T-0119-SP**	**153A-0119-SP**	**153N-0119-SP**
—	1.6142	41.00	1/4	**153T-41-SP**	**153A-41-SP**	**153N-41-SP**
1-5/8	1.6250	41.28	1/4	**153T-0120-SP**	**153A-0120-SP**	**153N-0120-SP**
—	1.6535	42.00	1/4	**153T-42-SP**	**153A-42-SP**	**153N-42-SP**
1-21/32	1.6563	42.07	1/4	**153T-0121-SP**	**153A-0121-SP**	**153N-0121-SP**
1-11/16	1.6875	42.86	1/4	**153T-0122-SP**	**153A-0122-SP**	**153N-0122-SP**
—	1.6929	43.00	1/4	**153T-43-SP**	**153A-43-SP**	**153N-43-SP**
1-23/32	1.7188	43.66	1/4	**153T-0123-SP**	**153A-0123-SP**	**153N-0123-SP**
—	1.7323	44.00	1/4	**153T-44-SP**	**153A-44-SP**	**153N-44-SP**
1-3/4	1.7500	44.45	1/4	**153T-0124-SP**	**153A-0124-SP**	**153N-0124-SP**
—	1.7717	45.00	1/4	**153T-45-SP**	**153A-45-SP**	**153N-45-SP**
1-25/32	1.7813	45.25	1/4	**153T-0125-SP**	**153A-0125-SP**	**153N-0125-SP**
—	1.7913	45.50	1/4	**153T-45.5-SP**	**153A-45.5-SP**	**153N-45.5-SP**
—	1.7970	45.64	1/4	**153T-1.797-SP**	**153A-1.797-SP**	**153N-1.797-SP**
—	1.8110	46.00	1/4	**153T-46-SP**	**153A-46-SP**	**153N-46-SP**
1-13/16	1.8125	46.04	1/4	**153T-0126-SP**	**153A-0126-SP**	**153N-0126-SP**
1-27/32	1.8438	46.83	1/4	**153T-0127-SP**	**153A-0127-SP**	**153N-0127-SP**
—	1.8504	47.00	1/4	**153T-47-SP**	**153A-47-SP**	**153N-47-SP**
1-7/8	1.8750	47.63	1/4	**153T-0128-SP**	**153A-0128-SP**	**153N-0128-SP**

A30: 112 - 143

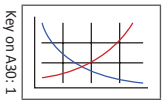

Key on A30: 1

A30: 82 - 85

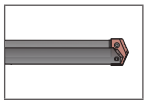

A30: 4 - 6

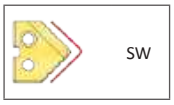

Inserts sold in quantities of 1.

Coatings not listed above can be supplied as nonstocked standards. Process fees apply.

TiN = 153T-XXXX	**TiAlN** = 153A-XXXX
TiCN = 153N-XXXX	**AM200®** = 153H-XXXX

T-A® Drill Inserts

3 Series | HSS | Diameter Range: 1.353" - 1.882" (34.36 mm - 47.80 mm)

Flat Bottom

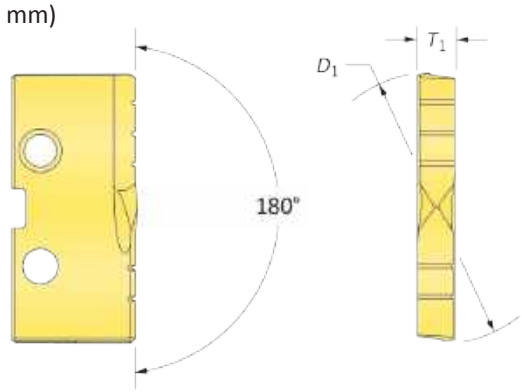

HSS Inserts – Super Cobalt

Insert				Part No.
Fractional Equivalent	D_1 inch	D_1 mm	T_1	TiN
1-13/32	1.4063	35.72	1/4	**153T-0113-FB**
—	1.4173	36.00	1/4	**153T-36-FB**
1-7/16	1.4375	36.51	1/4	**153T-0114-FB**
—	1.4567	37.00	1/4	**153T-37-FB**
1-15/32	1.4688	37.31	1/4	**153T-0115-FB**
—	1.4961	38.00	1/4	**153T-38-FB**
1-1/2	1.5000	38.10	1/4	**153T-0116-FB**
1-17/32	1.5313	38.90	1/4	**153T-0117-FB**
—	1.5354	39.00	1/4	**153T-39-FB**
—	1.5470	39.29	1/4	**153T-1.547-FB**
1-9/16	1.5625	39.69	1/4	**153T-0118-FB**
—	1.5748	40.00	1/4	**153T-40-FB**
1-19/32	1.5938	40.48	1/4	**153T-0119-FB**
—	1.6142	41.00	1/4	**153T-41-FB**
1-5/8	1.6250	41.28	1/4	**153T-0120-FB**
—	1.6535	42.00	1/4	**153T-42-FB**
1-21/32	1.6563	42.07	1/4	**153T-0121-FB**
1-11/16	1.6875	42.86	1/4	**153T-0122-FB**
—	1.6929	43.00	1/4	**153T-43-FB**
1-23/32	1.7188	43.66	1/4	**153T-0123-FB**
—	1.7323	44.00	1/4	**153T-44-FB**
1-3/4	1.7500	44.45	1/4	**153T-0124-FB**
—	1.7717	45.00	1/4	**153T-45-FB**
1-25/32	1.7813	45.25	1/4	**153T-0125-FB**
—	1.7913	45.50	1/4	**153T-45.5-FB**
—	1.7970	45.64	1/4	**153T-1.797-FB**
—	1.8110	46.00	1/4	**153T-46-FB**
1-13/16	1.8125	46.04	1/4	**153T-0126-FB**
1-27/32	1.8438	46.83	1/4	**153T-0127-FB**
—	1.8504	47.00	1/4	**153T-47-FB**
1-7/8	1.8750	47.63	1/4	**153T-0128-FB**

A30: 112 - 143

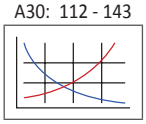

Key on A30: 1

A30: 82 - 85

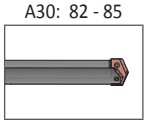

A30: 4 - 6

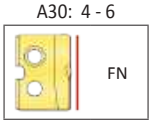

Inserts sold in quantities of 1.

Coatings not listed above can be supplied as nonstocked standards. Process fees apply.

TiN = 153T-XXXX	**TiAlN** = 153A-XXXX
TiCN = 153N-XXXX	**AM200®** = 153H-XXXX

T-A® Drill Inserts

3 Series | Carbide | Diameter Range: 1.353" - 1.882" (34.36 mm - 47.80 mm)

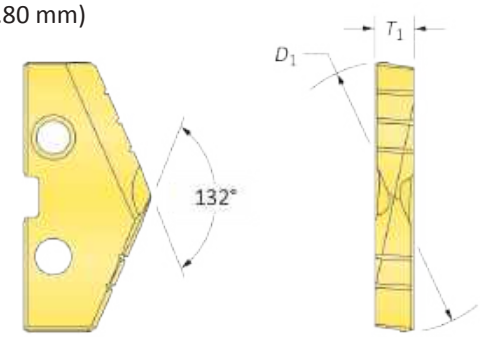

Carbide Inserts – C2 (K20)

Insert				Part No.	
Fractional Equivalent	D_1 inch	D_1 mm	T_1	TiN	TiAlN
1-13/32	1.4063	35.72	1/4	**1C23T-0113**	**1C23A-0113**
—	1.4173	36.00	1/4	**1C23T-36**	**1C23A-36**
1-7/16	1.4375	36.51	1/4	**1C23T-0114**	**1C23A-0114**
—	1.4567	37.00	1/4	**1C23T-37**	**1C23A-37**
1-15/32	1.4688	37.31	1/4	**1C23T-0115**	**1C23A-0115**
—	1.4961	38.00	1/4	**1C23T-38**	**1C23A-38**
1-1/2	1.5000	38.10	1/4	**1C23T-0116**	**1C23A-0116**
1-17/32	1.5313	38.90	1/4	**1C23T-0117**	**1C23A-0117**
—	1.5354	39.00	1/4	**1C23T-39**	**1C23A-39**
—	1.5470	39.29	1/4	**1C23T-1.547**	**1C23A-1.547**
1-9/16	1.5625	39.69	1/4	**1C23T-0118**	**1C23A-0118**
—	1.5748	40.00	1/4	**1C23T-40**	**1C23A-40**
1-19/32	1.5938	40.48	1/4	**1C23T-0119**	**1C23A-0119**
—	1.6142	41.00	1/4	**1C23T-41**	**1C23A-41**
1-5/8	1.6250	41.28	1/4	**1C23T-0120**	**1C23A-0120**
—	1.6535	42.00	1/4	**1C23T-42**	**1C23A-42**
1-21/32	1.6563	42.07	1/4	**1C23T-0121**	**1C23A-0121**
1-11/16	1.6875	42.86	1/4	**1C23T-0122**	**1C23A-0122**
—	1.6929	43.00	1/4	**1C23T-43**	**1C23A-43**
1-23/32	1.7188	43.66	1/4	**1C23T-0123**	**1C23A-0123**
—	1.7323	44.00	1/4	**1C23T-44**	**1C23A-44**
1-3/4	1.7500	44.45	1/4	**1C23T-0124**	**1C23A-0124**
—	1.7717	45.00	1/4	**1C23T-45**	**1C23A-45**
1-25/32	1.7813	45.25	1/4	**1C23T-0125**	**1C23A-0125**
—	1.7913	45.50	1/4	**1C23T-45.5**	**1C23A-45.5**
—	1.7970	45.64	1/4	**1C23T-1.797**	**1C23A-1.797**
—	1.8110	46.00	1/4	**1C23T-46**	**1C23A-46**
1-13/16	1.8125	46.04	1/4	**1C23T-0126**	**1C23A-0126**
1-27/32	1.8438	46.83	1/4	**1C23T-0127**	**1C23A-0127**
—	1.8504	47.00	1/4	**1C23T-47**	**1C23A-47**
1-7/8	1.8750	47.63	1/4	**1C23T-0128**	**1C23A-0128**

A30: 112 - 143
Key on A30: 1

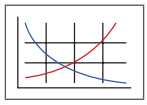

A30: 82 - 85

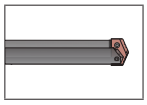

A30: 4 - 6

HI, HR, CR, SK, NP, IN, RN, CN, BR, NC, WC, TC, BT

Inserts sold in quantities of 1.

Coatings not listed above can be supplied as nonstocked standards. Process fees apply.

TiN = 1C23T-XXXX	**TiAlN** = 1C23A-XXXX
TiCN = 1C23N-XXXX	**AM200®** = 1C23H-XXXX

T-A® Drill Inserts

3 Series | Carbide | Diameter Range: 1.353" - 1.882" (34.36 mm - 47.80 mm)

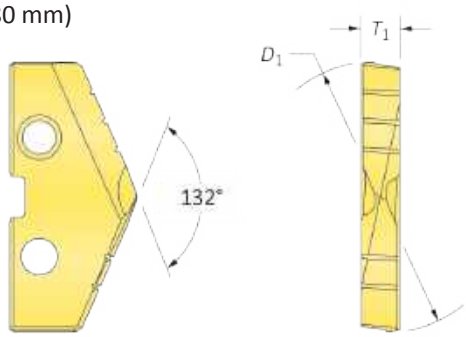

Carbide Inserts – C5 (P40)

Insert				Part No.	
Fractional Equivalent	D_1 inch	D_1 mm	T_1	TiN	TiAlN
1-13/32	1.4063	35.72	1/4	**1C53T-0113**	**1C53A-0113**
—	1.4173	36.00	1/4	**1C53T-36**	**1C53A-36**
1-7/16	1.4375	36.51	1/4	**1C53T-0114**	**1C53A-0114**
—	1.4567	37.00	1/4	**1C53T-37**	**1C53A-37**
1-15/32	1.4688	37.31	1/4	**1C53T-0115**	**1C53A-0115**
—	1.4961	38.00	1/4	**1C53T-38**	**1C53A-38**
1-1/2	1.5000	38.10	1/4	**1C53T-0116**	**1C53A-0116**
1-17/32	1.5313	38.90	1/4	**1C53T-0117**	**1C53A-0117**
—	1.5354	39.00	1/4	**1C53T-39**	**1C53A-39**
—	1.5470	39.29	1/4	**1C53T-1.547**	**1C53A-1.547**
1-9/16	1.5625	39.69	1/4	**1C53T-0118**	**1C53A-0118**
—	1.5748	40.00	1/4	**1C53T-40**	**1C53A-40**
1-19/32	1.5938	40.48	1/4	**1C53T-0119**	**1C53A-0119**
—	1.6142	41.00	1/4	**1C53T-41**	**1C53A-41**
1-5/8	1.6250	41.28	1/4	**1C53T-0120**	**1C53A-0120**
—	1.6535	42.00	1/4	**1C53T-42**	**1C53A-42**
1-21/32	1.6563	42.07	1/4	**1C53T-0121**	**1C53A-0121**
1-11/16	1.6875	42.86	1/4	**1C53T-0122**	**1C53A-0122**
—	1.6929	43.00	1/4	**1C53T-43**	**1C53A-43**
1-23/32	1.7188	43.66	1/4	**1C53T-0123**	**1C53A-0123**
—	1.7323	44.00	1/4	**1C53T-44**	**1C53A-44**
1-3/4	1.7500	44.45	1/4	**1C53T-0124**	**1C53A-0124**
—	1.7717	45.00	1/4	**1C53T-45**	**1C53A-45**
1-25/32	1.7813	45.25	1/4	**1C53T-0125**	**1C53A-0125**
—	1.7913	45.50	1/4	**1C53T-45.5**	**1C53A-45.5**
—	1.7970	45.64	1/4	**1C53T-1.797**	**1C53A-1.797**
—	1.8110	46.00	1/4	**1C53T-46**	**1C53A-46**
1-13/16	1.8125	46.04	1/4	**1C53T-0126**	**1C53A-0126**
1-27/32	1.8438	46.83	1/4	**1C53T-0127**	**1C53A-0127**
—	1.8504	47.00	1/4	**1C53T-47**	**1C53A-47**
1-7/8	1.8750	47.63	1/4	**1C53T-0128**	**1C53A-0128**

A30: 112 - 143

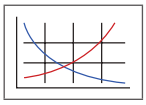

Key on A30: 1

A30: 82 - 85

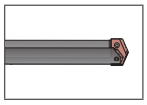

A30: 4 - 6

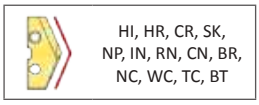

Inserts sold in quantities of 1.

Coatings not listed above can be supplied as nonstocked standards. Process fees apply.

TiN = 1C53T-XXXX	**TiAlN** = 1C53A-XXXX
TiCN = 1C53N-XXXX	**AM200®** = 1C53H-XXXX

T-A® Drill Insert Holders

3 Series | Flange Shank | Diameter Range: 1.353" - 1.882" (34.36 mm - 47.80 mm)

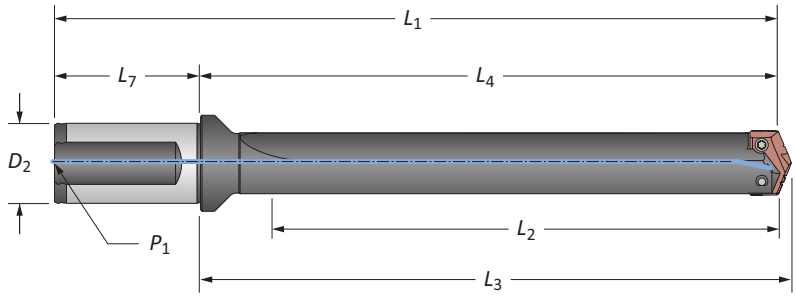

Straight Flute

	Length	Body L_2	Body L_4	Body L_3	Body L_1	Shank D_2	Shank L_7	Shank P_1	Part No.
i	Short	4.512	6.813	7.000	9.501	1-1/2	2.688	1/4 NPT	**22030S-150F**
i	Intermediate	6.262	8.563	8.750	11.251	1-1/2	2.688	1/4 NPT	**23030S-150F**
i	Standard	8.012	10.313	10.500	13.001	1-1/2	2.688	1/4 NPT	**24030S-150F**
m	Short	114.6	173.1	177.8	243.1	40	70.0	1/4 BSPT	**22030S-40FM**
m	Extended	343.2	401.7	406.4	471.7	40	70.0	1/4 BSPT	⚠ **25030S-40FM**
m	XL	552.8	611.2	616.0	681.2	40	70.0	1/4 BSPT	⚠ **27030S-40FM**
m	3XL	781.4	839.8	844.6	909.8	40	70.0	1/4 BSPT	⚠ **29030S-40FM**

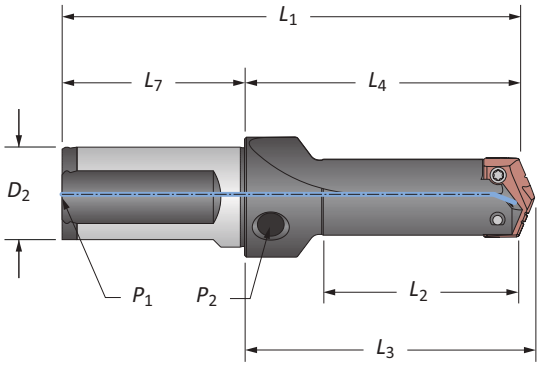

Straight Flute (Stub Length)

	Length	Body L_2	Body L_4	Body L_3	Body L_1	Shank D_2	Shank L_7	Shank P_1	Part No.
i	Stub	3.846	4.922	5.109	7.610	1-1/2	2.688	1/4 NPT	**21030S-150F**
m	Stub	97.7	125.0	129.8	195.0	40	70.0	1/4 BSPT	**21030S-40FM**

NOTE: Stub length holders have a 1/4" side pipe tap (P_2).

Connection Accessories

Insert Screws	Nylon Locking Screws	Insert Driver	Preset Torque Hand Driver	Replacement Tips	Admissible Tightening Torque*
7514-IP20-1	7514N-IP20-1	8IP-20	–	–	121.3 in-lbs (1370 N-cm)

*Tightening torques are calculated with a friction coefficient of μ = 0.14 and develop 90% of ultimate yield strength.

A30: 74 - 81

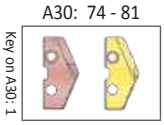

i = Imperial (in)
m = Metric (mm)
Screws sold in quantities of 10.

⚠ **WARNING** Refer to Speed and Feed charts for recommended adjustments to speeds and feeds. Refer to page A30: 146 for deep hole drilling guidelines in this section of the catalog. Visit **www.alliedmachine.com/DeepHoleGuidelines** for the most up-to-date information and procedures. Factory technical assistance is available for your specific applications through our Application Engineering Team.

T-A® Drill Insert Holders

3 Series | Flange Shank | Diameter Range: 1.353" - 1.882" (34.36 mm - 47.80 mm)

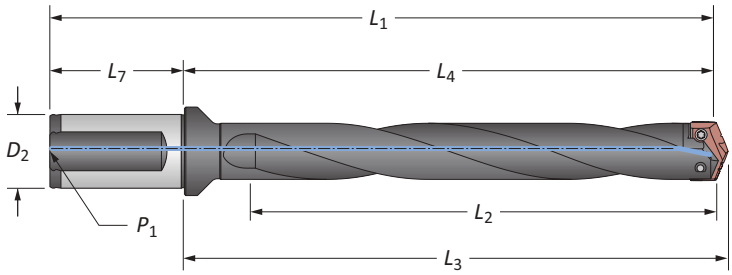

Helical Flute

	Length	Body L_2	Body L_4	Body L_3	Body L_1	Shank D_2	Shank L_7	Shank P_1	Part No.
i	Intermediate	7.312	8.563	8.750	11.251	1-1/2	2.688	1/4 NPT	**23030H-150F**
	Standard	9.062	10.313	10.500	13.001	1-1/2	2.688	1/4 NPT	**24030H-150F**
m	Intermediate	185.7	217.5	222.3	287.5	40	70.0	1/4 BSPT	**23030H-40FM**
	Standard	230.2	262.0	266.7	332.0	40	70.0	1/4 BSPT	**24030H-40FM**

Connection Accessories

Insert Screws	Nylon Locking Screws	Insert Driver	Preset Torque Hand Driver	Replacement Tips	Admissible Tightening Torque*
7514-IP20-1	7514N-IP20-1	8IP-20	–	–	121.3 in-lbs (1370 N-cm)

*Tightening torques are calculated with a friction coefficient of μ = 0.14 and develop 90% of ultimate yield strength.

A30: 74 - 81

Key on A30: 1

i = Imperial (in)
m = Metric (mm)
Screws sold in quantities of 10.

T-A® Drill Insert Holders

3 Series | Taper Shank | Diameter Range: 1.353" - 1.882" (34.36 mm - 47.80 mm)

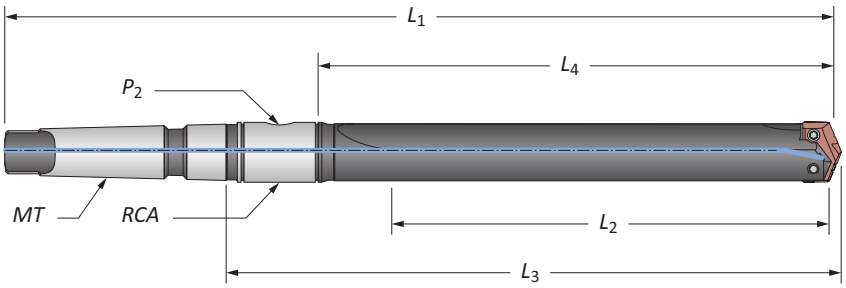

Straight Flute

	Length	Body L_2	Body L_4	Body L_3	Body L_1	Shank MT*	Shank P_2	Shank RCA	Part No.
i	Short	4.391	6.000	8.124	12.562	#4 MT	1/4 NPT	2T-4SR	**22030S-004I**
	Short	4.048	6.000	8.124	13.812	#5 MT	1/4 NPT	2T-5SR	**22030S-005I**
	Intermediate	6.141	7.750	9.874	14.312	#4 MT	1/4 NPT	2T-4SR	**23030S-004I**
	Standard	7.891	9.500	11.624	16.062	#4 MT	1/4 NPT	2T-4SR	**24030S-004I**
	Standard	7.548	9.500	11.624	17.312	#5 MT	1/4 NPT	2T-5SR	**24030S-005I**
	Extended	13.391	15.000	17.124	21.562	#4 MT	1/4 NPT	2T-4SR	⚠ **25030S-004I**
	XL	21.641	23.250	25.374	29.812	#4 MT	1/4 NPT	2T-4SR	⚠ **27030S-004I**
	3XL	30.641	32.250	34.374	38.812	#4 MT	1/4 NPT	2T-4SR	⚠ **29030S-004I**
m	Short	110.0	152.4	206.3	319.1	#4 MT ISO	1/4 BSPT	2T-4SRM	**22030S-004M**
	Extended	338.6	381.0	434.9	547.7	#4 MT ISO	1/4 BSPT	2T-4SRM	⚠ **25030S-004M**
	XL	548.1	590.6	644.5	757.2	#4 MT ISO	1/4 BSPT	2T-4SRM	⚠ **27030S-004M**
	3XL	776.7	819.2	873.1	985.8	#4 MT ISO	1/4 BSPT	2T-4SRM	⚠ **29030S-004M**

*MT ISO 296 type BEK.

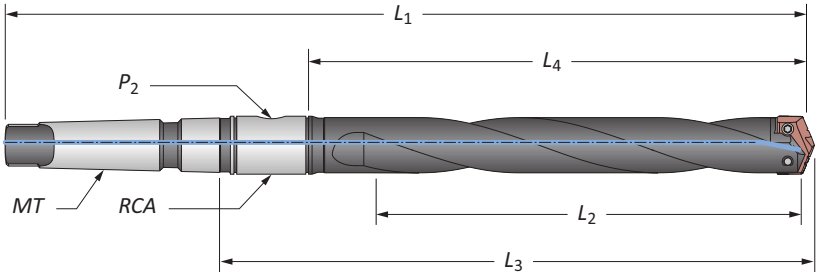

Helical Flute

	Length	Body L_2	Body L_4	Body L_3	Body L_1	Shank MT*	Shank P_2	Shank RCA	Part No.
m	Intermediate	179.8	196.9	250.8	363.5	#4 MT ISO	1/4 BSPT	2T-4SRM	**23030H-004M**
	Standard	224.3	241.3	295.2	408.0	#4 MT ISO	1/4 BSPT	2T-4SRM	**24030H-004M**

*MT ISO 296 type BEK.

Connection Accessories

Insert Screws	Nylon Locking Screws	Insert Driver	Preset Torque Hand Driver	Replacement Tips	Admissible Tightening Torque*
7514-IP20-1	7514N-IP20-1	8IP-20	–	–	121.3 in-lbs (1370 N-cm)

*Tightening torques are calculated with a friction coefficient of μ = 0.14 and develop 90% of ultimate yield strength.

A30: 74 - 81

Key on A30: 1

A30: 85 & 110

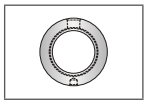

i = Imperial (in)
m = Metric (mm)
Screws sold in quantities of 10.

⚠ **WARNING** Refer to Speed and Feed charts for recommended adjustments to speeds and feeds. Refer to page A30: 146 for deep hole drilling guidelines in this section of the catalog. Visit **www.alliedmachine.com/DeepHoleGuidelines** for the most up-to-date information and procedures. Factory technical assistance is available for your specific applications through our Application Engineering Team.

T-A® Drill Insert Holders

3 Series | Straight Shank | Diameter Range: 1.353" - 1.882" (34.36 mm - 47.80 mm)

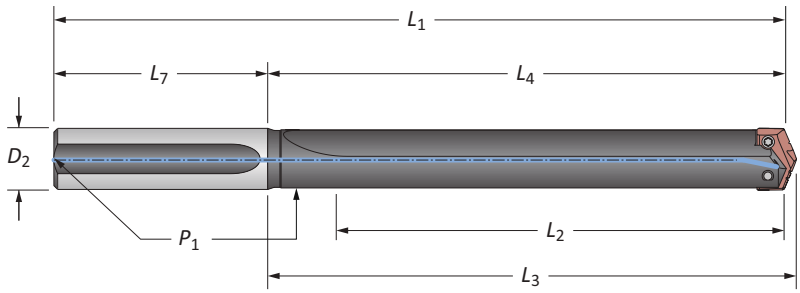

Straight Flute

	Length	Body L_2	Body L_4	Body L_3	Body L_1	Shank D_2	Shank L_7	Shank P_1	Part No.
	Short	4.320	6.000	6.187	10.000	1-1/4	4.000	1/4 NPT	**22030S-125L**
	Short	3.838	6.000	6.187	10.000	1-1/2	4.000	1/4 NPT	**22030S-150L**
	Intermediate	5.798	7.750	7.937	11.750	1-1/2	4.000	1/4 NPT	**23030S-150L**
i	Standard	7.820	9.500	9.687	13.500	1-1/4	4.000	1/4 NPT	**24030S-125L**
i	Standard	7.548	9.500	9.687	13.500	1-1/2	4.000	1/4 NPT	**24030S-150L**
	Extended	13.320	15.000	15.187	19.000	1-1/4	4.000	1/4 NPT	⚠ **25030S-125L**
	XL	21.088	23.250	23.437	27.250	1-1/2	4.000	1/4 NPT	⚠ **27030S-150L**
	3XL	30.088	32.250	32.437	36.250	1-1/2	4.000	1/4 NPT	⚠ **29030S-150L**

T-A Drill Accessories

3 Series | Rotary Coolant Adapters | Torx® Plus Screws

Rotary Coolant Adapter (RCA) and Accessories

	ID	OD	L_1	Driving Rod Thread	P_1	Part No.	RCA O-Rings Kit Part No.*	RCA O-Rings Replacements
i	1.250	2.500	1.375	3/8" - 16	1/4 NPT	⚠ **2T-4SR**	2T1-4SR	2T1-4OR-10
i	1.750	3.000	1.375	3/8" - 16	1/4 NPT	⚠ **2T-5SR**	2T1-5SR	2T1-5OR-10
m	31.8	63.5	34.9	M10 x 1.50	1/4 BSPT	⚠ **2T-4SRM**	2T1-4SR	2T1-4OR-10
m	44.5	76.2	34.9	M10 x 1.50	1/4 BSPT	⚠ **2T-5SRM**	2T1-5SR	2T1-5OR-10

*RCA Repair Kit includes (2) O-rings, (2) snap rings, and (2) thrust washers.
⚠ Refer to page A30: 110 for proper RCA assembly and safety information.

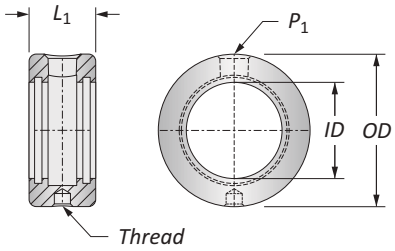

Connection Accessories

Insert Screws	Nylon Locking Screws	Insert Driver	Preset Torque Hand Driver	Replacement Tips	Admissible Tightening Torque*
7514-IP20-1	7514N-IP20-1	8IP-20	–	–	121.3 in-lbs (1370 N-cm)

*Tightening torques are calculated with a friction coefficient of μ = 0.14 and develop 90% of ultimate yield strength.

A30: 74 - 81

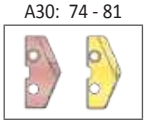

Key on A30: 1

A30: 82 - 85

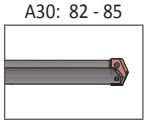

i = Imperial (in)
m = Metric (mm)
Inserts sold separately.
Screws sold in quantities of 10.
O-rings sold in packs of 10.

⚠ **WARNING** Refer to Speed and Feed charts for recommended adjustments to speeds and feeds. Refer to page A30: 146 for deep hole drilling guidelines in this section of the catalog. Visit **www.alliedmachine.com/DeepHoleGuidelines** for the most up-to-date information and procedures. Factory technical assistance is available for your specific applications through our Application Engineering Team.

GEN2 T-A® Drill Inserts

4 Series | HSS | Diameter Range: 1.850" - 2.570" (46.99 mm - 65.28 mm)

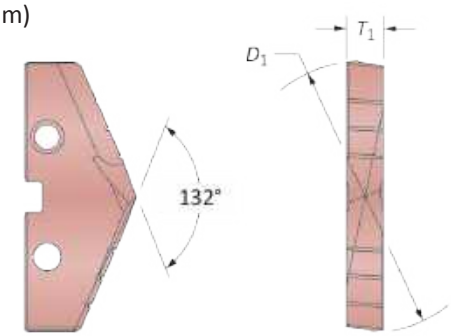

HSS Inserts – Super Cobalt

Insert				Part No.	
Fractional Equivalent	D_1 inch	D_1 mm	T_1	AM200®	TiN
—	1.8898	48.00	5/16	**454H-48**	**454T-48**
1-29/32	1.9063	48.42	5/16	**454H-0129**	**454T-0129**
—	1.9291	49.00	5/16	**454H-49**	**454T-49**
1-15/16	1.9375	49.21	5/16	**454H-0130**	**454T-0130**
—	1.9685	50.00	5/16	**454H-50**	**454T-50**
1-31/32	1.9688	50.01	5/16	**454H-0131**	**454T-0131**
2	2.0000	50.80	5/16	**454H-0200**	**454T-0200**
—	2.0079	51.00	5/16	**454H-51**	**454T-51**
2-1/32	2.0313	51.60	5/16	**454H-0201**	**454T-0201**
2-3/64	2.0472	52.00	5/16	**454H-52**	**454T-52**
2-1/16	2.0625	52.39	5/16	**454H-0202**	**454T-0202**
—	2.0866	53.00	5/16	**454H-53**	**454T-53**
2-3/32	2.0938	53.18	5/16	**454H-0203**	**454T-0203**
2-1/8	2.1250	53.98	5/16	**454H-0204**	**454T-0204**
—	2.1260	54.00	5/16	**454H-54**	**454T-54**
2-5/32	2.1563	54.77	5/16	**454H-0205**	**454T-0205**
—	2.1654	55.00	5/16	**454H-55**	**454T-55**
2-3/16	2.1875	55.56	5/16	**454H-0206**	**454T-0206**
—	2.2047	56.00	5/16	**454H-56**	**454T-56**
2-7/32	2.2188	56.36	5/16	**454H-0207**	**454T-0207**
—	2.2441	57.00	5/16	**454H-57**	**454T-57**
2-1/4	2.2500	57.15	5/16	**454H-0208**	**454T-0208**
2-9/32	2.2813	57.95	5/16	**454H-0209**	**454T-0209**
—	2.2835	58.00	5/16	**454H-58**	**454T-58**
2-5/16	2.3125	58.74	5/16	**454H-0210**	**454T-0210**
—	2.3228	59.00	5/16	**454H-59**	**454T-59**
2-11/32	2.3438	59.53	5/16	**454H-0211**	**454T-0211**
—	2.3622	60.00	5/16	**454H-60**	**454T-60**
2-3/8	2.3750	60.33	5/16	**454H-0212**	**454T-0212**
—	2.4016	61.00	5/16	**454H-61**	**454T-61**
2-13/32	2.4063	61.12	5/16	**454H-0213**	**454T-0213**
2-7/16	2.4375	61.91	5/16	**454H-0214**	**454T-0214**
—	2.4409	62.00	5/16	**454H-62**	**454T-62**
2-15/32	2.4688	62.71	5/16	**454H-0215**	**454T-0215**
—	2.4803	63.00	5/16	**454H-63**	**454T-63**
2-1/2	2.5000	63.50	5/16	**454H-0216**	**454T-0216**
—	2.5197	64.00	5/16	**454H-64**	**454T-64**
2-17/32	2.5313	64.30	5/16	**454H-0217**	**454T-0217**
—	2.5591	65.00	5/16	**454H-65**	**454T-65**
2-9/16	2.5625	65.09	5/16	**454H-0218**	**454T-0218**

A30: 112 - 143

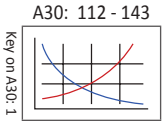

A30: 90 - 92

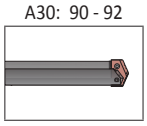

A30: 4 - 6

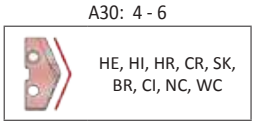

Inserts sold in quantities of 1.

Coatings not listed above can be supplied as nonstocked standards. Process fees apply.

TiN = 454T-XXXX	**TiAlN** = 454A-XXXX
TiCN = 454N-XXXX	**AM200®** = 454H-XXXX

GEN2 T-A® Drill Inserts

4 Series | HSS | Diameter Range: 1.850" - 2.570" (46.99 mm - 65.28 mm)

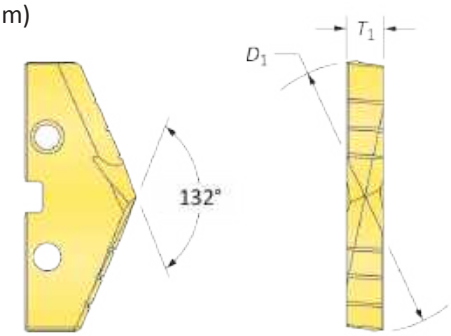

HSS Inserts – HSS

Insert				Part No.
Fractional Equivalent	D_1 inch	D_1 mm	T_1	TiN
—	1.8898	48.00	5/16	**434T-48**
1-29/32	1.9063	48.42	5/16	**434T-0129**
—	1.9291	49.00	5/16	**434T-49**
1-15/16	1.9375	49.21	5/16	**434T-0130**
—	1.9685	50.00	5/16	**434T-50**
1-31/32	1.9688	50.01	5/16	**434T-0131**
2	2.0000	50.80	5/16	**434T-0200**
—	2.0079	51.00	5/16	**434T-51**
2-1/32	2.0313	51.60	5/16	**434T-0201**
2-3/64	2.0472	52.00	5/16	**434T-52**
2-1/16	2.0625	52.39	5/16	**434T-0202**
—	2.0866	53.00	5/16	**434T-53**
2-3/32	2.0938	53.18	5/16	**434T-0203**
2-1/8	2.1250	53.98	5/16	**434T-0204**
—	2.1260	54.00	5/16	**434T-54**
2-5/32	2.1563	54.77	5/16	**434T-0205**
—	2.1654	55.00	5/16	**434T-55**
2-3/16	2.1875	55.56	5/16	**434T-0206**
—	2.2047	56.00	5/16	**434T-56**
2-7/32	2.2188	56.36	5/16	**434T-0207**
—	2.2441	57.00	5/16	**434T-57**
2-1/4	2.2500	57.15	5/16	**434T-0208**
2-9/32	2.2813	57.95	5/16	**434T-0209**
—	2.2835	58.00	5/16	**434T-58**
2-5/16	2.3125	58.74	5/16	**434T-0210**
—	2.3228	59.00	5/16	**434T-59**
2-11/32	2.3438	59.53	5/16	**434T-0211**
—	2.3622	60.00	5/16	**434T-60**
2-3/8	2.3750	60.33	5/16	**434T-0212**
—	2.4016	61.00	5/16	**434T-61**
2-13/32	2.4063	61.12	5/16	**434T-0213**
2-7/16	2.4375	61.91	5/16	**434T-0214**
—	2.4409	62.00	5/16	**434T-62**
2-15/32	2.4688	62.71	5/16	**434T-0215**
—	2.4803	63.00	5/16	**434T-63**
2-1/2	2.5000	63.50	5/16	**434T-0216**
—	2.5197	64.00	5/16	**434T-64**
2-17/32	2.5313	64.30	5/16	**434T-0217**
—	2.5591	65.00	5/16	**434T-65**
2-9/16	2.5625	65.09	5/16	**434T-0218**

A30: 112 - 143
Key on A30: 1

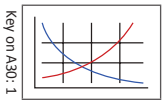

A30: 90 - 92

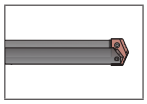

A30: 4 - 6

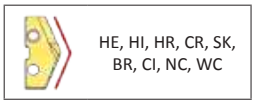

Inserts sold in quantities of 1.

Coatings not listed above can be supplied as nonstocked standards. Process fees apply.

TiN = 434T-XXXX	**TiAlN** = 434A-XXXX
TiCN = 434N-XXXX	**AM200®** = 434H-XXXX

T-A® Drill Inserts

4 Series | HSS | Diameter Range: 1.850" - 2.570" (46.99 mm - 65.28 mm)

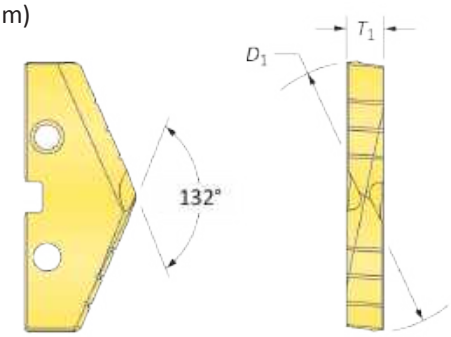

HSS Inserts – Super Cobalt

Insert				Part No.
Fractional Equivalent	D_1 inch	D_1 mm	T_1	TiN
—	1.8898	48.00	5/16	**154T-48**
1-29/32	1.9063	48.42	5/16	**154T-0129**
—	1.9291	49.00	5/16	**154T-49**
1-15/16	1.9375	49.21	5/16	**154T-0130**
—	1.9685	50.00	5/16	**154T-50**
1-31/32	1.9688	50.01	5/16	**154T-0131**
2	2.0000	50.80	5/16	**154T-0200**
—	2.0079	51.00	5/16	**154T-51**
2-1/32	2.0313	51.60	5/16	**154T-0201**
2-3/64	2.0472	52.00	5/16	**154T-52**
2-1/16	2.0625	52.39	5/16	**154T-0202**
—	2.0866	53.00	5/16	**154T-53**
2-3/32	2.0938	53.18	5/16	**154T-0203**
2-1/8	2.1250	53.98	5/16	**154T-0204**
—	2.1260	54.00	5/16	**154T-54**
2-5/32	2.1563	54.77	5/16	**154T-0205**
—	2.1654	55.00	5/16	**154T-55**
2-3/16	2.1875	55.56	5/16	**154T-0206**
—	2.2047	56.00	5/16	**154T-56**
2-7/32	2.2188	56.36	5/16	**154T-0207**
—	2.2441	57.00	5/16	**154T-57**
2-1/4	2.2500	57.15	5/16	**154T-0208**
2-9/32	2.2813	57.95	5/16	**154T-0209**
—	2.2835	58.00	5/16	**154T-58**
2-5/16	2.3125	58.74	5/16	**154T-0210**
—	2.3228	59.00	5/16	**154T-59**
2-11/32	2.3438	59.53	5/16	**154T-0211**
—	2.3622	60.00	5/16	**154T-60**
2-3/8	2.3750	60.33	5/16	**154T-0212**
—	2.4016	61.00	5/16	**154T-61**
2-13/32	2.4063	61.12	5/16	**154T-0213**
2-7/16	2.4375	61.91	5/16	**154T-0214**
—	2.4409	62.00	5/16	**154T-62**
2-15/32	2.4688	62.71	5/16	**154T-0215**
—	2.4803	63.00	5/16	**154T-63**
2-1/2	2.5000	63.50	5/16	**154T-0216**
—	2.5197	64.00	5/16	**154T-64**
2-17/32	2.5313	64.30	5/16	**154T-0217**
—	2.5591	65.00	5/16	**154T-65**
2-9/16	2.5625	65.09	5/16	**154T-0218**

A30: 112 - 143

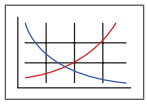

A30: 90 - 92

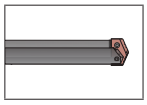

A30: 4 - 6

HI, HR, CR, SK, BR, CI, NC, WC, TC

Inserts sold in quantities of 1.

Coatings not listed above can be supplied as nonstocked standards. Process fees apply.

TiN = 154T-XXXX	**TiAlN** = 154A-XXXX
TiCN = 154N-XXXX	**AM200®** = 154H-XXXX

T-A® Drill Inserts

4 Series | HSS | Diameter Range: 1.850" - 2.570" (46.99 mm - 65.28 mm)

Flat Bottom

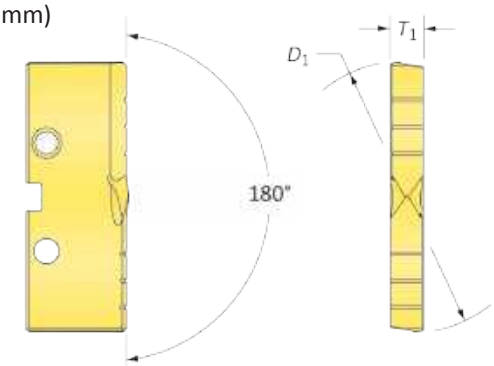

HSS Inserts – Super Cobalt

Insert				Part No.
Fractional Equivalent	D_1 inch	D_1 mm	T_1	TiN
—	1.8898	48.00	5/16	**154T-48-FB**
1-29/32	1.9063	48.42	5/16	**154T-0129-FB**
—	1.9291	49.00	5/16	**154T-49-FB**
1-15/16	1.9375	49.21	5/16	**154T-0130-FB**
—	1.9685	50.00	5/16	**154T-50-FB**
1-31/32	1.9688	50.01	5/16	**154T-0131-FB**
2	2.0000	50.80	5/16	**154T-0200-FB**
—	2.0079	51.00	5/16	**154T-51-FB**
2-1/32	2.0313	51.60	5/16	**154T-0201-FB**
2-3/64	2.0472	52.00	5/16	**154T-52-FB**
2-1/16	2.0625	52.39	5/16	**154T-0202-FB**
—	2.0866	53.00	5/16	**154T-53-FB**
2-3/32	2.0938	53.18	5/16	**154T-0203-FB**
2-1/8	2.1250	53.98	5/16	**154T-0204-FB**
—	2.1260	54.00	5/16	**154T-54-FB**
2-5/32	2.1563	54.77	5/16	**154T-0205-FB**
—	2.1654	55.00	5/16	**154T-55-FB**
2-3/16	2.1875	55.56	5/16	**154T-0206-FB**
—	2.2047	56.00	5/16	**154T-56-FB**
2-7/32	2.2188	56.36	5/16	**154T-0207-FB**
—	2.2441	57.00	5/16	**154T-57-FB**
2-1/4	2.2500	57.15	5/16	**154T-0208-FB**
2-9/32	2.2813	57.95	5/16	**154T-0209-FB**
—	2.2835	58.00	5/16	**154T-58-FB**
2-5/16	2.3125	58.74	5/16	**154T-0210-FB**
—	2.3228	59.00	5/16	**154T-59-FB**
2-11/32	2.3438	59.53	5/16	**154T-0211-FB**
—	2.3622	60.00	5/16	**154T-60-FB**
2-3/8	2.3750	60.33	5/16	**154T-0212-FB**
—	2.4016	61.00	5/16	**154T-61-FB**
2-13/32	2.4063	61.12	5/16	**154T-0213-FB**
2-7/16	2.4375	61.91	5/16	**154T-0214-FB**
—	2.4409	62.00	5/16	**154T-62-FB**
2-15/32	2.4688	62.71	5/16	**154T-0215-FB**
—	2.4803	63.00	5/16	**154T-63-FB**
2-1/2	2.5000	63.50	5/16	**154T-0216-FB**
—	2.5197	64.00	5/16	**154T-64-FB**
2-17/32	2.5313	64.30	5/16	**154T-0217-FB**
—	2.5591	65.00	5/16	**154T-65-FB**
2-9/16	2.5625	65.09	5/16	**154T-0218-FB**

A30: 112 - 143

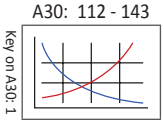

Key on A30: 1

A30: 90 - 92

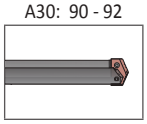

A30: 4 - 6

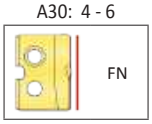

FN

Inserts sold in quantities of 1.

Coatings not listed above can be supplied as nonstocked standards. Process fees apply.

TiN = 154T-XXXX	**TiAlN** = 154A-XXXX
TiCN = 154N-XXXX	**AM200®** = 154H-XXXX

T-A® Drill Insert Holders

4 Series | Flange Shank | Diameter Range: 1.850" - 2.570" (46.99 mm - 65.28 mm)

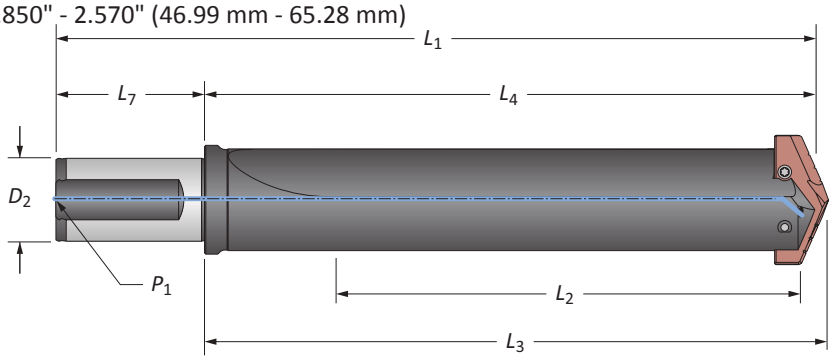

Straight Flute

	Length	Body L_2	Body L_4	Body L_3	Body L_1	Shank D_2	Shank L_7	Shank P_1	Part No.
i	Short	4.798	7.063	7.250	9.751	1-1/2	2.688	1/4 NPT	**22040S-150F**
i	Standard	8.798	11.063	11.250	13.751	1-1/2	2.688	1/4 NPT	**24040S-150F**
m	Short	121.9	179.4	184.2	249.4	40	70.0	1/4 BSPT	**22040S-40FM**
m	Extended	414.0	471.5	476.3	541.5	40	70.0	1/4 BSPT	⚠ **25040S-40FM**
m	XL	617.2	674.7	679.5	744.7	40	70.0	1/4 BSPT	⚠ **27040S-40FM**
m	3XL	871.2	928.7	933.5	998.7	40	70.0	1/4 BSPT	⚠ **29040S-40FM**

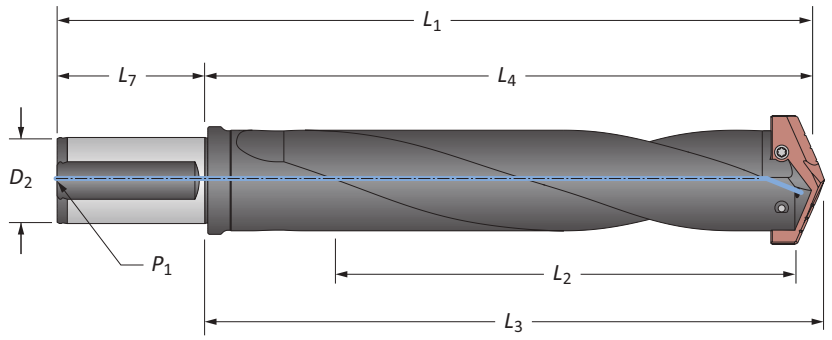

Helical Flute

	Length	Body L_2	Body L_4	Body L_3	Body L_1	Shank D_2	Shank L_7	Shank P_1	Part No.
i	Standard	9.949	11.063	11.250	13.751	1-1/2	2.688	1/4 NPT	**24040H-150F**
m	Standard	252.7	281.0	285.8	351.0	40	70.0	1/4 BSPT	**24040H-40FM**

Connection Accessories

Insert Screws	Nylon Locking Screws	Insert Driver	Preset Torque Hand Driver	Replacement Tips	Admissible Tightening Torque*
7514-IP20-1	7514N-IP20-1	8IP-20	–	–	121.3 in-lbs (1370 N-cm)

*Tightening torques are calculated with a friction coefficient of μ = 0.14 and develop 90% of ultimate yield strength.

A30: 86 - 89

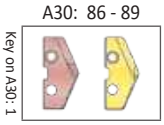

i = Imperial (in)
m = Metric (mm)
Screws sold in quantities of 10.

⚠ **WARNING** Refer to Speed and Feed charts for recommended adjustments to speeds and feeds. Refer to page A30: 146 for deep hole drilling guidelines in this section of the catalog. Visit **www.alliedmachine.com/DeepHoleGuidelines** for the most up-to-date information and procedures. Factory technical assistance is available for your specific applications through our Application Engineering Team.

T-A® Drill Insert Holders

4 Series | Taper Shank | Diameter Range: 1.850" - 2.570" (46.99 mm - 65.28 mm)

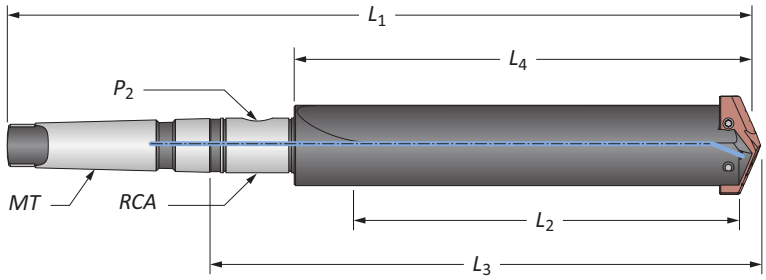

Straight Flute

	Length	Body L_2	Body L_4	Body L_3	Body L_1	Shank MT*	Shank P_2	Shank RCA	Part No.
i	Short	5.139	6.500	8.624	13.062	#4 MT	1/4 NPT	2T-4SR	**22040S-004I**
	Short	4.537	6.500	8.624	14.312	#5 MT	1/4 NPT	2T-5SR	**22040S-005I**
	Standard	9.139	10.500	12.624	17.062	#4 MT	1/4 NPT	2T-4SR	**24040S-004I**
	Standard	8.537	10.500	12.624	18.312	#5 MT	1/4 NPT	2T-5SR	**24040S-005I**
	Extended	16.037	18.000	20.124	25.812	#5 MT	1/4 NPT	2T-5SR	⚠ **25040S-005I**
	XL	24.037	26.000	28.124	33.812	#5 MT	1/4 NPT	2T-5SR	⚠ **27040S-005I**
	3XL	34.037	36.000	38.124	43.812	#5 MT	1/4 NPT	2T-5SR	⚠ **29040S-005I**
m	Short	117.3	165.1	219.0	363.5	#5 MT ISO	1/4 BSPT	2T-5SRM	**22040S-005M**
	Extended	409.4	457.2	511.1	655.6	#5 MT ISO	1/4 BSPT	2T-5SRM	⚠ **25040S-005M**
	XL	622.1	660.4	714.3	858.8	#5 MT ISO	1/4 BSPT	2T-5SRM	⚠ **27040S-005M**
	3XL	876.1	914.4	968.3	1112.8	#5 MT ISO	1/4 BSPT	2T-5SRM	⚠ **29040S-005M**

*MT ISO 296 type BEK.

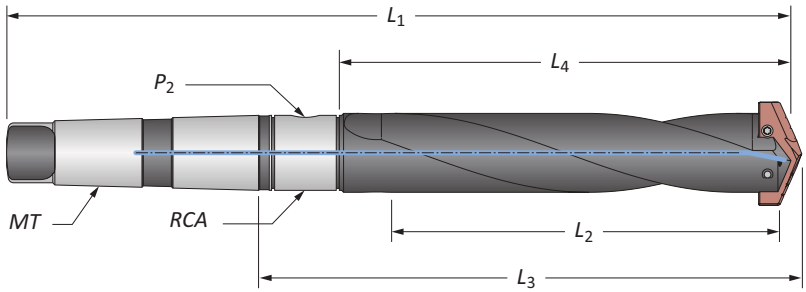

Helical Flute

	Length	Body L_2	Body L_4	Body L_3	Body L_1	Shank MT*	Shank P_2	Shank RCA	Part No.
m	Standard	246.3	266.7	320.6	465.1	#5 MT ISO	1/4 BSPT	2T-5SRM	**24040H-005M**

*MT ISO 296 type BEK.

Connection Accessories

Insert Screws	Nylon Locking Screws	Insert Driver	Preset Torque Hand Driver	Replacement Tips	Admissible Tightening Torque*
7514-IP20-1	7514N-IP20-1	8IP-20	–	–	121.3 in-lbs (1370 N-cm)

*Tightening torques are calculated with a friction coefficient of μ = 0.14 and develop 90% of ultimate yield strength.

A30: 86 - 89

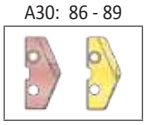

Key on A30: 1

A30: 93 & 110

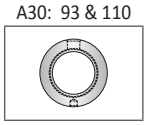

i = Imperial (in)
m = Metric (mm)
Screws sold in quantities of 10.

⚠ WARNING Refer to Speed and Feed charts for recommended adjustments to speeds and feeds. Refer to page A30: 146 for deep hole drilling guidelines in this section of the catalog. Visit **www.alliedmachine.com/DeepHoleGuidelines** for the most up-to-date information and procedures. Factory technical assistance is available for your specific applications through our Application Engineering Team.

T-A® Drill Insert Holders

4 Series | Straight Shank | Diameter Range: 1.850" - 2.570" (46.99 mm - 65.28 mm)

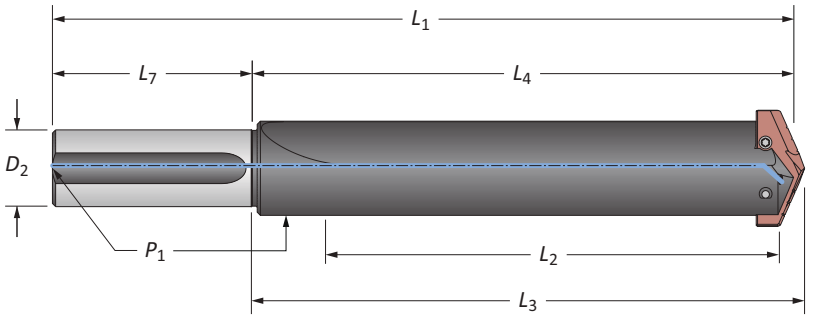

Straight Flute

	Length	Body L_2	Body L_4	Body L_3	Body L_1	Shank D_2	Shank L_7	Shank P_1	Part No.
	Short	4.918	6.500	6.687	10.500	1-1/2	4.000	1/4 NPT	**22040S-150L**
	Short	4.600	6.500	6.687	10.500	1-3/4	4.000	1/4 NPT	**22040S-175L**
	Standard	8.918	10.500	10.687	14.500	1-1/2	4.000	1/4 NPT	**24040S-150L**
i	Standard	8.600	10.500	10.687	14.500	1-3/4	4.000	1/4 NPT	**24040S-175L**
	Extended	16.418	18.000	18.187	22.000	1-1/2	4.000	1/4 NPT	⚠ **25040S-150L**
	XL	24.418	26.000	26.187	30.000	1-1/2	4.000	1/4 NPT	⚠ **27040S-150L**
	3XL	34.418	36.000	36.187	40.000	1-1/2	4.000	1/4 NPT	⚠ **29040S-150L**

Connection Accessories

Insert Screws	Nylon Locking Screws	Insert Driver	Preset Torque Hand Driver	Replacement Tips	Admissible Tightening Torque*
7514-IP20-1	7514N-IP20-1	8IP-20	–	–	121.3 in-lbs (1370 N-cm)

*Tightening torques are calculated with a friction coefficient of μ = 0.14 and develop 90% of ultimate yield strength.

A30: 86 - 89

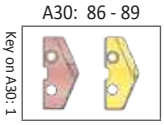

i = Imperial (in)
m = Metric (mm)
Screws sold in quantities of 10.

⚠ **WARNING** Refer to Speed and Feed charts for recommended adjustments to speeds and feeds. Refer to page A30: 146 for deep hole drilling guidelines in this section of the catalog. Visit **www.alliedmachine.com/DeepHoleGuidelines** for the most up-to-date information and procedures. Factory technical assistance is available for your specific applications through our Application Engineering Team.

T-A® Drill Accessories

4 Series | Rotary Coolant Adapters | Torx® Plus Screws

Rotary Coolant Adapter (RCA) and Accessories

	ID	*OD*	L_1	Driving Rod Thread	P_1	Part No.	RCA O-Rings Kit Part No.*	RCA O-Rings Replacements
i	1.250	2.500	1.375	3/8" - 16	1/4 NPT	⚠ 2T-4SR	2T1-4SR	2T1-4OR-10
	1.750	3.000	1.375	3/8" - 16	1/4 NPT	⚠ 2T-5SR	2T1-5SR	2T1-5OR-10
m	31.8	63.5	34.9	M10 x 1.50	1/4 BSPT	⚠ 2T-4SRM	2T1-4SR	2T1-4OR-10
	44.5	76.2	34.9	M10 x 1.50	1/4 BSPT	⚠ 2T-5SRM	2T1-5SR	2T1-5OR-10

*RCA Repair Kit includes (2) O-rings, (2) snap rings, and (2) thrust washers.
⚠ Refer to page A30: 110 for proper RCA assembly and safety information.

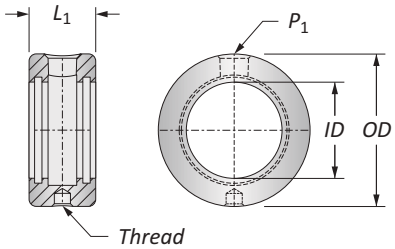

Connection Accessories

Insert Screws	Nylon Locking Screws	Insert Driver	Preset Torque Hand Driver	Replacement Tips	Admissible Tightening Torque*
7514-IP20-1	7514N-IP20-1	8IP-20	–	–	121.3 in-lbs (1370 N-cm)

*Tightening torques are calculated with a friction coefficient of μ = 0.14 and develop 90% of ultimate yield strength.

A30: 86 - 89

A30: 90 - 92

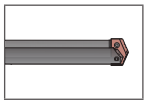

Key on A30: 1

i = Imperial (in)
m = Metric (mm)
Inserts sold separately.
Screws sold in quantities of 10.
O-rings sold in packs of 10.

⚠ WARNING Refer to Speed and Feed charts for recommended adjustments to speeds and feeds. Refer to page A30: 146 for deep hole drilling guidelines in this section of the catalog. Visit **www.alliedmachine.com/DeepHoleGuidelines** for the most up-to-date information and procedures. Factory technical assistance is available for your specific applications through our Application Engineering Team.

GEN2 T-A® Drill Inserts

5 Series | HSS | Diameter Range: 2.456" - 3.000" (62.38 mm - 76.20 mm)

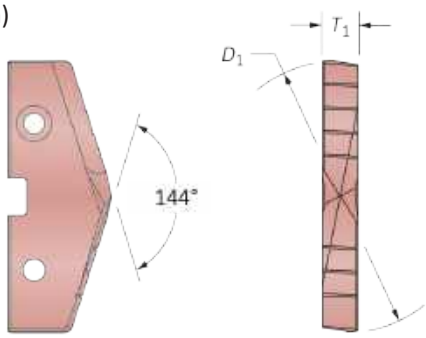

HSS Inserts – Super Cobalt | HSS

Insert				Super Cobalt Part No.	HSS Part No.
Fractional Equivalent	D_1 inch	D_1 mm	T_1	AM200®	TiN
2-1/2	2.5000	63.50	7/16	**455H-0216**	**435T-0216**
—	2.5197	64.00	7/16	**455H-64**	**435T-64**
2-17/32	2.5313	64.30	7/16	**455H-0217**	**435T-0217**
2-9/16	2.5625	65.09	7/16	**455H-0218**	**435T-0218**
2-19/32	2.5938	65.88	7/16	**455H-0219**	**435T-0219**
—	2.5984	66.00	7/16	**455H-66**	**435T-66**
2-5/8	2.6250	66.68	7/16	**455H-0220**	**435T-0220**
2-21/32	2.6563	67.47	7/16	**455H-0221**	**435T-0221**
—	2.6772	68.00	7/16	**455H-68**	**435T-68**
2-11/16	2.6875	68.26	7/16	**455H-0222**	**435T-0222**
2-23/32	2.7188	69.06	7/16	**455H-0223**	**435T-0223**
2-3/4	2.7500	69.85	7/16	**455H-0224**	**435T-0224**
—	2.7559	70.00	7/16	**455H-70**	**435T-70**
2-25/32	2.7813	70.65	7/16	**455H-0225**	**435T-0225**
2-13/16	2.8125	71.44	7/16	**455H-0226**	**435T-0226**
—	2.8346	72.00	7/16	**455H-72**	**435T-72**
2-27/32	2.8438	72.23	7/16	**455H-0227**	**435T-0227**
2-7/8	2.8750	73.03	7/16	**455H-0228**	**435T-0228**
2-29/32	2.9063	73.82	7/16	**455H-0229**	**435T-0229**
—	2.9134	74.00	7/16	**455H-74**	**435T-74**
2-15/16	2.9375	74.61	7/16	**455H-0230**	**435T-0230**
2-31/32	2.9688	75.41	7/16	**455H-0231**	**435T-0231**
—	2.9921	76.00	7/16	**455H-76**	**435T-76**
3	3.0000	76.20	7/16	**455H-0300**	**435T-0300**

A30: 112 - 143

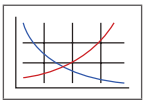

Key on A30: 1

A30: 98 - 100

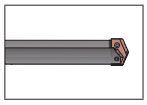

A30: 4 - 6

HI, HR, CR, SK, BR, NC, WC

Inserts sold in quantities of 1.

Coatings not listed above can be supplied as nonstocked standards. Process fees apply.

TiN = 455T-XXXX	**TiAlN** = 455A-XXXX
TiCN = 455N-XXXX	**AM200®** = 455H-XXXX

T-A® Drill Inserts

5 Series | HSS | Diameter Range: 2.456" - 3.000" (62.38 mm - 76.20 mm)

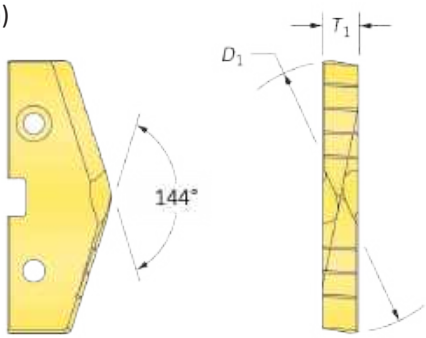

HSS Inserts – Super Cobalt | HSS

Insert				Super Cobalt Part No.*	HSS Part No.
Fractional Equivalent	D_1 inch	D_1 mm	T_1	TiN	TiN
2-1/2	2.5000	63.50	7/16	**155T-0216**	**135T-0216**
—	2.5197	64.00	7/16	**155T-64**	**135T-64**
2-17/32	2.5313	64.30	7/16	**155T-0217**	**135T-0217**
2-9/16	2.5625	65.09	7/16	**155T-0218**	**135T-0218**
2-19/32	2.5938	65.88	7/16	**155T-0219**	**135T-0219**
—	2.5984	66.00	7/16	**155T-66**	**135T-66**
2-5/8	2.6250	66.68	7/16	**155T-0220**	**135T-0220**
2-21/32	2.6563	67.47	7/16	**155T-0221**	**135T-0221**
—	2.6772	68.00	7/16	**155T-68**	**135T-68**
2-11/16	2.6875	68.26	7/16	**155T-0222**	**135T-0222**
2-23/32	2.7188	69.06	7/16	**155T-0223**	**135T-0223**
2-3/4	2.7500	69.85	7/16	**155T-0224**	**135T-0224**
—	2.7559	70.00	7/16	**155T-70**	**135T-70**
2-25/32	2.7813	70.65	7/16	**155T-0225**	**135T-0225**
2-13/16	2.8125	71.44	7/16	**155T-0226**	**135T-0226**
—	2.8346	72.00	7/16	**155T-72**	**135T-72**
2-27/32	2.8438	72.23	7/16	**155T-0227**	**135T-0227**
2-7/8	2.8750	73.03	7/16	**155T-0228**	**135T-0228**
2-29/32	2.9063	73.82	7/16	**155T-0229**	**135T-0229**
—	2.9134	74.00	7/16	**155T-74**	**135T-74**
2-15/16	2.9375	74.61	7/16	**155T-0230**	**135T-0230**
2-31/32	2.9688	75.41	7/16	**155T-0231**	**135T-0231**
—	2.9921	76.00	7/16	**155T-76**	**135T-76**
3	3.0000	76.20	7/16	**155T-0300**	**135T-0300**

*Available as nonstocked standard.

A30: 112 - 143

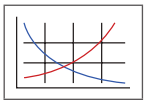

Key on A30: 1

A30: 98 - 100

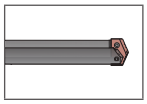

A30: 4 - 6

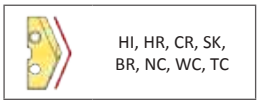

Inserts sold in quantities of 1.

Coatings not listed above can be supplied as nonstocked standards. Process fees apply.

TiN = 155T-XXXX	**TiAlN** = 155A-XXXX
TiCN = 155N-XXXX	**AM200®** = 155H-XXXX

GEN2 T-A® Drill Inserts

6 Series | HSS | Diameter Range: 3.001" - 3.507" (76.22 mm - 89.08 mm)
(for use with 5 series holders)

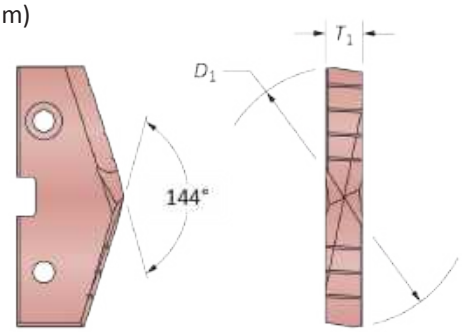

HSS Inserts – Super Cobalt | HSS

Insert				Super Cobalt Part No.	HSS Part No.
Fractional Equivalent	D_1 inch	D_1 mm	T_1	AM200®	TiN
3-1/32	3.0313	77.00	7/16	**456H-0301**	**436T-0301**
3-1/16	3.0625	77.79	7/16	**456H-0302**	**436T-0302**
—	3.0709	78.00	7/16	**456H-78**	**436T-78**
3-3/32	3.0938	78.58	7/16	**456H-0303**	**436T-0303**
3-1/8	3.1250	79.38	7/16	**456H-0304**	**436T-0304**
—	3.1496	80.00	7/16	**456H-80**	**436T-80**
3-5/32	3.1563	80.17	7/16	**456H-0305**	**436T-0305**
3-3/16	3.1875	80.96	7/16	**456H-0306**	**436T-0306**
3-7/32	3.2188	81.76	7/16	**456H-0307**	**436T-0307**
—	3.2283	82.00	7/16	**456H-82**	**436T-82**
3-1/4	3.2500	82.55	7/16	**456H-0308**	**436T-0308**
3-9/32	3.2813	83.35	7/16	**456H-0309**	**436T-0309**
—	3.3071	84.00	7/16	**456H-84**	**436T-84**
3-5/16	3.3125	84.14	7/16	**456H-0310**	**436T-0310**
3-11/32	3.3438	84.93	7/16	**456H-0311**	**436T-0311**
3-3/8	3.3750	85.73	7/16	**456H-0312**	**436T-0312**
—	3.3858	86.00	7/16	**456H-86**	**436T-86**
3-13/32	3.4063	86.52	7/16	**456H-0313**	**436T-0313**
3-7/16	3.4375	87.31	7/16	**456H-0314**	**436T-0314**
—	3.4646	88.00	7/16	**456H-88**	**436T-88**
3-15/32	3.4688	88.11	7/16	**456H-0315**	**436T-0315**
3-1/2	3.5000	88.90	7/16	**456H-0316**	**436T-0316**

A30: 112 - 143
Key on A30: 1

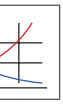

A30: 98 - 100

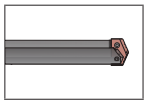

A30: 4 - 6

HI, HR, CR, SK, BR, NC, WC

Inserts sold in quantities of 1.

Coatings not listed above can be supplied as nonstocked standards. Process fees apply.

TiN = 456T-XXXX	**TiAlN** = 456A-XXXX
TiCN = 456N-XXXX	**AM200®** = 456H-XXXX

T-A® Drill Inserts

6 Series | HSS | Diameter Range: 3.001" - 3.507" (76.22 mm - 89.08 mm)
(for use with 5 series holders)

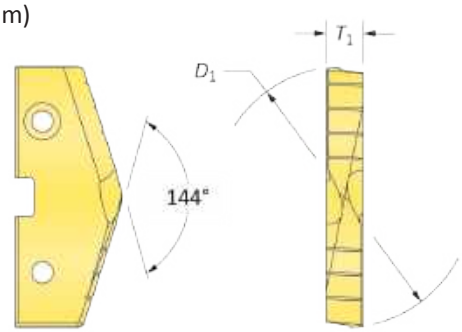

HSS Inserts – Super Cobalt | HSS

Insert				Super Cobalt Part No.*	HSS Part No.
Fractional Equivalent	D_1 inch	D_1 mm	T_1	TiN	TiN
3-1/32	3.0313	77.00	7/16	**156T-0301**	**136T-0301**
3-1/16	3.0625	77.79	7/16	**156T-0302**	**136T-0302**
—	3.0709	78.00	7/16	**156T-78**	**136T-78**
3-3/32	3.0938	78.58	7/16	**156T-0303**	**136T-0303**
3-1/8	3.1250	79.38	7/16	**156T-0304**	**136T-0304**
—	3.1496	80.00	7/16	**156T-80**	**136T-80**
3-5/32	3.1563	80.17	7/16	**156T-0305**	**136T-0305**
3-3/16	3.1875	80.96	7/16	**156T-0306**	**136T-0306**
3-7/32	3.2188	81.76	7/16	**156T-0307**	**136T-0307**
—	3.2283	82.00	7/16	**156T-82**	**136T-82**
3-1/4	3.2500	82.55	7/16	**156T-0308**	**136T-0308**
3-9/32	3.2813	83.35	7/16	**156T-0309**	**136T-0309**
—	3.3071	84.00	7/16	**156T-84**	**136T-84**
3-5/16	3.3125	84.14	7/16	**156T-0310**	**136T-0310**
3-11/32	3.3438	84.93	7/16	**156T-0311**	**136T-0311**
3-3/8	3.3750	85.73	7/16	**156T-0312**	**136T-0312**
—	3.3858	86.00	7/16	**156T-86**	**136T-86**
3-13/32	3.4063	86.52	7/16	**156T-0313**	**136T-0313**
3-7/16	3.4375	87.31	7/16	**156T-0314**	**136T-0314**
—	3.4646	88.00	7/16	**156T-88**	**136T-88**
3-15/32	3.4688	88.11	7/16	**156T-0315**	**136T-0315**
3-1/2	3.5000	88.90	7/16	**156T-0316**	**136T-0316**

*Available as nonstocked standard.

A30: 112 - 143
Key on A30: 1

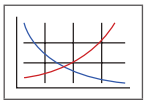

A30: 98 - 100

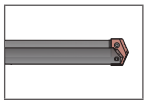

A30: 4 - 6

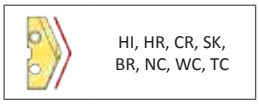

Inserts sold in quantities of 1.

Coatings not listed above can be supplied as nonstocked standards. Process fees apply.

TiN = 156T-XXXX	**TiAlN** = 156A-XXXX
TiCN = 156N-XXXX	**AM200®** = 156H-XXXX

T-A® Drill Insert Holders

5 Series | Flange Shank | Diameter Range: 2.456" - 3.507" (62.38 mm - 89.08 mm)

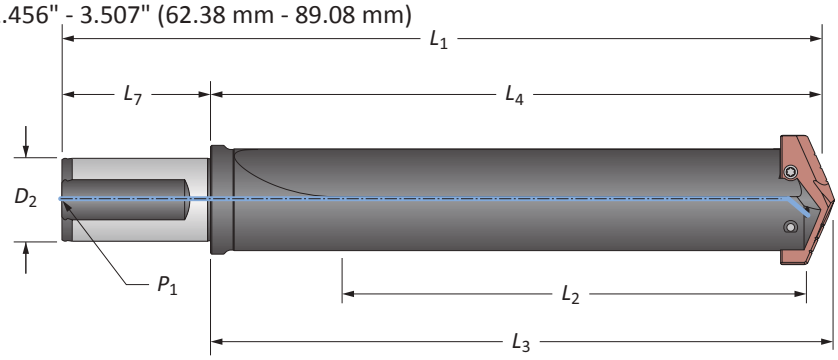

Straight Flute

	Length	Body L_2	Body L_4	Body L_3	Body L_1	Shank D_2	Shank L_7	Shank P_1	Part No.
i	Short	6.523	8.500	8.750	13.000	2	4.500	1/2 NPT	**22050S-200F**
	Extended	18.023	20.000	20.250	24.500	2	4.500	1/2 NPT	⚠ **25050S-200F**
m	Short	165.7	215.9	222.3	295.9	50	80.0	1/2 BSPT	**22050S-50FM**
	Extended	457.8	508.0	514.4	588.0	50	80.0	1/2 BSPT	⚠ **25050S-50FM**

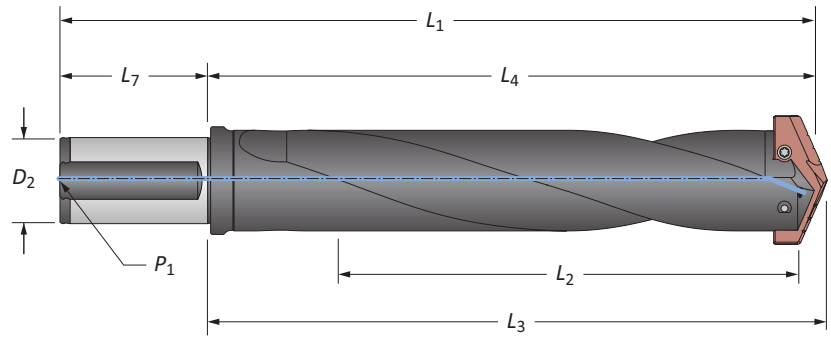

Helical Flute

	Length	Body L_2	Body L_4	Body L_3	Body L_1	Shank D_2	Shank L_7	Shank P_1	Part No.
i	Standard	10.918	12.500	12.750	17.000	2	4.500	1/2 NPT	**24050H-200F**
m	Standard	277.3	317.5	323.9	397.5	50	80.0	1/2 BSPT	**24050H-50FM**

Connection Accessories

Insert Screws	Nylon Locking Screws	Insert Driver	Preset Torque Hand Driver	Replacement Tips	Admissible Tightening Torque*
7619-IP25-1	–	8IP-25	–	–	155.0 in-lbs (1750 N-cm)

*Tightening torques are calculated with a friction coefficient of μ = 0.14 and develop 90% of ultimate yield strength.

A30: 94 - 97

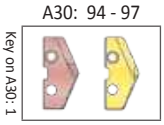

i = Imperial (in)
m = Metric (mm)
Screws sold in quantities of 10.

⚠ **WARNING** Refer to Speed and Feed charts for recommended adjustments to speeds and feeds. Refer to page A30: 146 for deep hole drilling guidelines in this section of the catalog. Visit **www.alliedmachine.com/DeepHoleGuidelines** for the most up-to-date information and procedures. Factory technical assistance is available for your specific applications through our Application Engineering Team.

T-A® Drill Insert Holders

5 Series | Taper Shank | Diameter Range: 2.456" - 3.507" (62.38 mm - 89.08 mm)

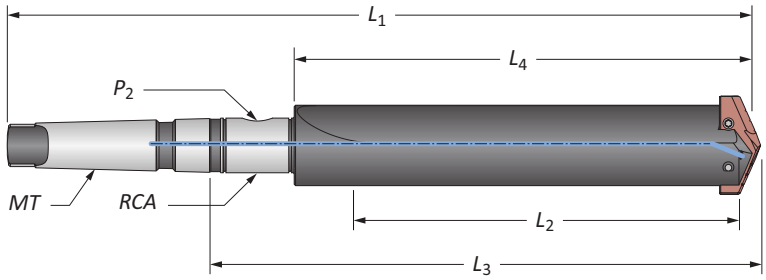

Straight Flute

	Length	Body L_2	Body L_4	Body L_3	Body L_1	Shank MT*	Shank P_2	Shank RCA	Part No.
i	Short	6.438	8.500	11.312	16.937	#5 MT	1/2 NPT	2T-6SR	**22050S-005I**
	Standard	10.438	12.500	15.312	20.937	#5 MT	1/2 NPT	2T-6SR	**24050S-005I**
	Extended	17.938	20.000	22.812	28.437	#5 MT	1/2 NPT	2T-6SR	⚠ **25050S-005I**
	XL	25.688	27.750	30.562	36.187	#5 MT	1/2 NPT	2T-6SR	⚠ **27050S-005I**
	3XL	34.688	36.750	39.562	45.187	#5 MT	1/2 NPT	2T-6SR	⚠ **29050S-005I**
m	Short	163.5	215.9	287.3	430.2	#5 MT ISO	1/2 BSPT	2T-6SRM	**22050S-005M**
	Extended	455.6	508.0	579.4	722.3	#5 MT ISO	1/2 BSPT	2T-6SRM	⚠ **25050S-005M**
	XL	652.4	704.9	776.3	919.1	#5 MT ISO	1/2 BSPT	2T-6SRM	⚠ **27050S-005M**
	3XL	881.0	933.5	1004.9	1147.7	#5 MT ISO	1/2 BSPT	2T-6SRM	⚠ **29050S-005M**

*MT ISO 296 type BEK.

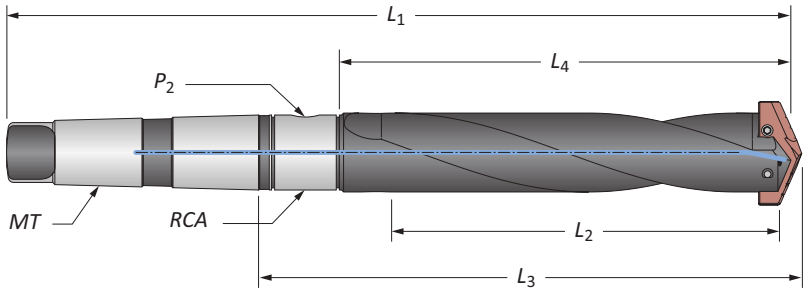

Helical Flute

	Length	Body L_2	Body L_4	Body L_3	Body L_1	Shank MT*	Shank P_2	Shank RCA	Part No.
m	Standard	286.3	317.5	388.9	531.8	#5 MT ISO	1/2 BSPT	2T-6SRM	**24050H-005M**

*MT ISO 296 type BEK.

Connection Accessories

Insert Screws	Nylon Locking Screws	Insert Driver	Preset Torque Hand Driver	Replacement Tips	Admissible Tightening Torque*
7619-IP25-1	–	8IP-25	–	–	155.0 in-lbs (1750 N-cm)

*Tightening torques are calculated with a friction coefficient of μ = 0.14 and develop 90% of ultimate yield strength.

A30: 94 - 97

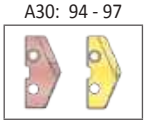

Key on A30: 1

A30: 101 & 110

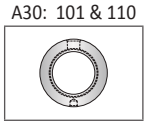

i = Imperial (in)
m = Metric (mm)
Screws sold in quantities of 10.

⚠ **WARNING** Refer to Speed and Feed charts for recommended adjustments to speeds and feeds. Refer to page A30: 146 for deep hole drilling guidelines in this section of the catalog. Visit **www.alliedmachine.com/DeepHoleGuidelines** for the most up-to-date information and procedures. Factory technical assistance is available for your specific applications through our Application Engineering Team.

T-A® Drill Insert Holders

5 Series | Straight Shank | Diameter Range: 2.456" - 3.507" (62.38 mm - 89.08 mm)

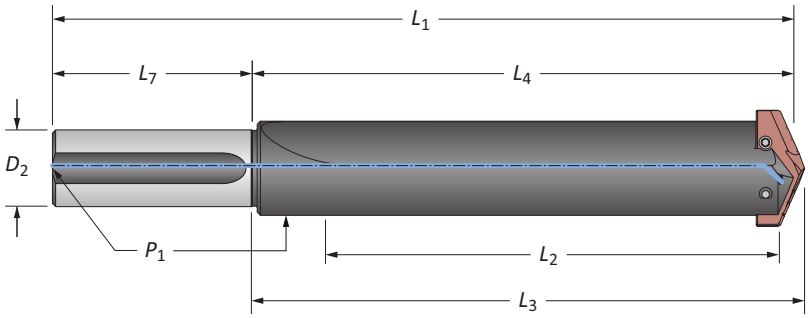

Straight Flute

	Length	Body L_2	Body L_4	Body L_3	Body L_1	Shank D_2	Shank L_7	Shank P_1	Part No.
	Short	6.353	8.500	8.750	12.500	2	4.000	1/2 NPT	**22050S-200L**
	Standard	10.353	12.500	12.750	16.500	2	4.000	1/2 NPT	**24050S-200L**
ⓘ	Extended	17.850	20.000	20.250	24.000	2	4.000	1/2 NPT	⚠ **25050S-200L**
	XL	25.603	27.750	28.000	31.750	2	4.000	1/2 NPT	⚠ **27050S-200L**
	3XL	34.603	36.750	37.000	40.750	2	4.000	1/2 NPT	⚠ **29050S-200L**

Connection Accessories

Insert Screws	Nylon Locking Screws	Insert Driver	Preset Torque Hand Driver	Replacement Tips	Admissible Tightening Torque*
7619-IP25-1	–	8IP-25	–	–	155.0 in-lbs (1750 N-cm)

*Tightening torques are calculated with a friction coefficient of μ = 0.14 and develop 90% of ultimate yield strength.

A30: 94 - 97

ⓘ = Imperial (in)
ⓜ = Metric (mm)
Screws sold in quantities of 10.

⚠ **WARNING** Refer to Speed and Feed charts for recommended adjustments to speeds and feeds. Refer to page A30: 146 for deep hole drilling guidelines in this section of the catalog. Visit **www.alliedmachine.com/DeepHoleGuidelines** for the most up-to-date information and procedures. Factory technical assistance is available for your specific applications through our Application Engineering Team.

T-A® Drill Accessories

5/6 Series | Rotary Coolant Adapters | Torx® Plus Screws

Rotary Coolant Adapter (RCA) and Accessories

	ID	OD	L_1	Driving Rod Thread	P_1	Part No.	RCA O-Rings Kit Part No.**	RCA O-Rings Replacements
i	2.250	3.750	1.750	1/2" - 13	1/2 NPT	⚠ 2T-6SR	2T1-6SR	2T1-6OR-10
m	57.2	95.3	44.5	M10 x 1.50	1/2 BSPT	⚠ 2T-6SRM	2T1-6SR	2T1-6OR-10

*RCA Repair Kit includes (2) O-rings, (2) snap rings, and (2) thrust washers.

⚠ Refer to page A30: 110 for proper RCA assembly and safety information.

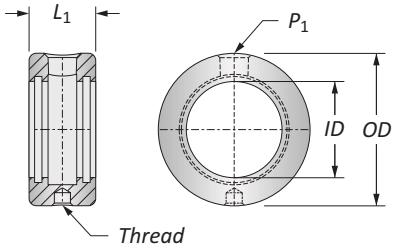

Connection Accessories

Insert Screws	Nylon Locking Screws	Insert Driver	Preset Torque Hand Driver	Replacement Tips	Admissible Tightening Torque*
7619-IP25-1	–	8IP-25	–	–	155.0 in-lbs (1750 N-cm)

*Tightening torques are calculated with a friction coefficient of μ = 0.14 and develop 90% of ultimate yield strength.

A30: 94 - 97

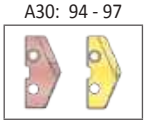

Key on A30: 1

A30: 98 - 100

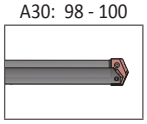

i = Imperial (in)
m = Metric (mm)
Inserts sold separately.
Screws sold in quantities of 10.
O-rings sold in packs of 10.

⚠ WARNING Refer to Speed and Feed charts for recommended adjustments to speeds and feeds. Refer to page A30: 146 for deep hole drilling guidelines in this section of the catalog. Visit **www.alliedmachine.com/DeepHoleGuidelines** for the most up-to-date information and procedures. Factory technical assistance is available for your specific applications through our Application Engineering Team.

GEN2 T-A® Drill Inserts

7 Series | HSS | Diameter Range: 3.508" - 4.000" (89.10 mm - 101.60 mm)

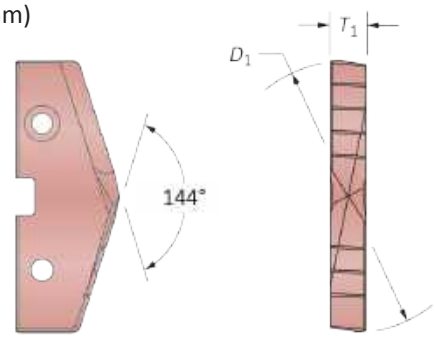

HSS Inserts – Super Cobalt | HSS

Insert				Super Cobalt Part No.	HSS Part No.
Fractional Equivalent	D_1 inch	D_1 mm	T_1	AM200®	TiN
3-17/32	3.5313	89.70	7/16	**457H-0317**	**437T-0317**
—	3.5433	90.00	7/16	**457H-90**	**437T-90**
3-9/16	3.5625	90.49	7/16	**457H-0318**	**437T-0318**
3-19/32	3.5938	91.28	7/16	**457H-0319**	**437T-0319**
—	3.6220	92.00	7/16	**457H-92**	**437T-92**
3-5/8	3.6250	92.08	7/16	**457H-0320**	**437T-0320**
3-21/32	3.6563	92.87	7/16	**457H-0321**	**437T-0321**
3-11/16	3.6875	93.66	7/16	**457H-0322**	**437T-0322**
—	3.7008	94.00	7/16	**457H-94**	**437T-94**
3-23/32	3.7188	94.46	7/16	**457H-0323**	**437T-0323**
3-3/4	3.7500	95.25	7/16	**457H-0324**	**437T-0324**
—	3.7795	96.00	7/16	**457H-96**	**437T-96**
3-25/32	3.7813	96.05	7/16	**457H-0325**	**437T-0325**
3-13/16	3.8125	96.84	7/16	**457H-0326**	**437T-0326**
3-27/32	3.8438	97.63	7/16	**457H-0327**	**437T-0327**
—	3.8583	98.00	7/16	**457H-98**	**437T-98**
3-7/8	3.8750	98.43	7/16	**457H-0328**	**437T-0328**
3-29/32	3.9063	99.22	7/16	**457H-0329**	**437T-0329**
—	3.9370	100.00	7/16	**457H-100**	**437T-100**
3-15/16	3.9375	100.01	7/16	**457H-0330**	**437T-0330**
3-31/32	3.9688	100.81	7/16	**457H-0331**	**437T-0331**
4	4.0000	101.60	7/16	**457H-0400**	**437T-0400**

A30: 112 - 143

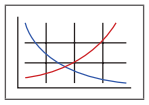

Key on A30: 1

A30: 106 - 108

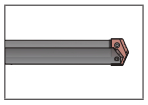

A30: 4 - 6

HI, HR, CR, SK, BR, NC, WC

Inserts sold in quantities of 1.

Coatings not listed above can be supplied as nonstocked standards. Process fees apply.

TiN = 457T-XXXX	**TiAlN** = 457A-XXXX
TiCN = 457N-XXXX	**AM200®** = 457H-XXXX

T-A® Drill Inserts

7 Series | HSS | Diameter Range: 3.508" - 4.000" (89.10 mm - 101.60 mm)

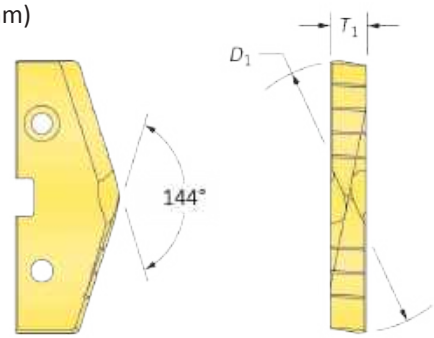

HSS Inserts – Super Cobalt | HSS

Insert				Super Cobalt Part No.*	HSS Part No.
Fractional Equivalent	D_1 inch	D_1 mm	T_1	TiN	TiN
3-17/32	3.5313	89.70	7/16	**157T-0317**	**137T-0317**
—	3.5433	90.00	7/16	**157T-90**	**137T-90**
3-9/16	3.5625	90.49	7/16	**157T-0318**	**137T-0318**
3-19/32	3.5938	91.28	7/16	**157T-0319**	**137T-0319**
—	3.6220	92.00	7/16	**157T-92**	**137T-92**
3-5/8	3.6250	92.08	7/16	**157T-0320**	**137T-0320**
3-21/32	3.6563	92.87	7/16	**157T-0321**	**137T-0321**
3-11/16	3.6875	93.66	7/16	**157T-0322**	**137T-0322**
—	3.7008	94.00	7/16	**157T-94**	**137T-94**
3-23/32	3.7188	94.46	7/16	**157T-0323**	**137T-0323**
3-3/4	3.7500	95.25	7/16	**157T-0324**	**137T-0324**
—	3.7795	96.00	7/16	**157T-96**	**137T-96**
3-25/32	3.7813	96.05	7/16	**157T-0325**	**137T-0325**
3-13/16	3.8125	96.84	7/16	**157T-0326**	**137T-0326**
3-27/32	3.8438	97.63	7/16	**157T-0327**	**137T-0327**
—	3.8583	98.00	7/16	**157T-98**	**137T-98**
3-7/8	3.8750	98.43	7/16	**157T-0328**	**137T-0328**
3-29/32	3.9063	99.22	7/16	**157T-0329**	**137T-0329**
—	3.9370	100.00	7/16	**157T-100**	**137T-100**
3-15/16	3.9375	100.01	7/16	**157T-0330**	**137T-0330**
3-31/32	3.9688	100.81	7/16	**157T-0331**	**137T-0331**
4	4.0000	101.60	7/16	**157T-0400**	**137T-0400**

*Available as nonstocked standard.

A30: 112 - 143

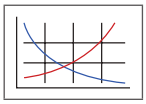

Key on A30: 1

A30: 106 - 108

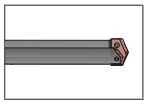

A30: 4 - 6

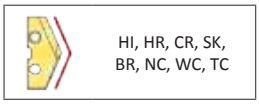

Inserts sold in quantities of 1.

Coatings not listed above can be supplied as nonstocked standards. Process fees apply.

TiN = 157T-XXXX	**TiAlN** = 157A-XXXX
TiCN = 157N-XXXX	**AM200®** = 157H-XXXX

GEN2 T-A® Drill Inserts

8 Series | HSS | Diameter Range: 4.001" - 4.507" (101.63 mm - 114.48 mm)
(for use with 7 series holders)

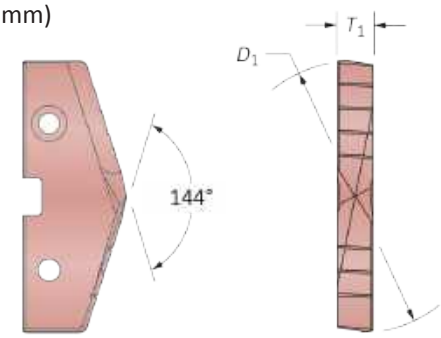

HSS Inserts – Super Cobalt | HSS

Insert				Super Cobalt Part No.	HSS Part No.
Fractional Equivalent	D_1 inch	D_1 mm	T_1	AM200®	TiN
4-1/64	4.0157	102.00	7/16	**458H-102**	**438T-102**
4-1/16	4.0625	103.19	7/16	**458H-0402**	**438T-0402**
—	4.0945	104.00	7/16	**458H-104**	**438T-104**
4-1/8	4.1250	104.78	7/16	**458H-0404**	**438T-0404**
—	4.1732	106.00	7/16	**458H-106**	**438T-106**
4-3/16	4.1875	106.36	7/16	**458H-0406**	**438T-0406**
4-1/4	4.2500	107.95	7/16	**458H-0408**	**438T-0408**
—	4.2520	108.00	7/16	**458H-108**	**438T-108**
4-5/16	4.3125	109.54	7/16	**458H-0410**	**438T-0410**
—	4.3307	110.00	7/16	**458H-110**	**438T-110**
4-3/8	4.3750	111.13	7/16	**458H-0412**	**438T-0412**
—	4.4094	112.00	7/16	**458H-112**	**438T-112**
4-7/16	4.4375	112.71	7/16	**458H-0414**	**438T-0414**
—	4.4882	114.00	7/16	**458H-114**	**438T-114**
4-1/2	4.5000	114.30	7/16	**458H-0416**	**438T-0416**

A30: 112 - 143
Key on A30: 1

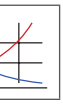

A30: 106 - 108

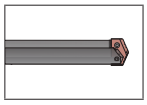

A30: 4 - 6

HI, HR, CR, SK, BR, NC, WC

Inserts sold in quantities of 1.

Coatings not listed above can be supplied as nonstocked standards. Process fees apply.

TiN = 458T-XXXX	**TiAlN** = 458A-XXXX
TiCN = 458N-XXXX	**AM200®** = 458H-XXXX

T-A® Drill Inserts

8 Series | HSS | Diameter Range: 4.001" - 4.507" (101.63 mm - 114.48 mm)
(for use with 7 series holders)

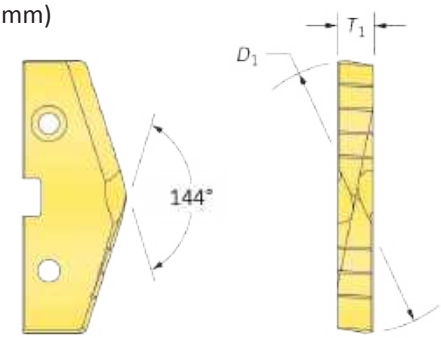

HSS Inserts – Super Cobalt | HSS

Insert				Super Cobalt Part No.*	HSS Part No.
Fractional Equivalent	D_1 inch	D_1 mm	T_1	TiN	TiN
4-1/64	4.0157	102.00	7/16	**158T-102**	**138T-102**
4-1/16	4.0625	103.19	7/16	**158T-0402**	**138T-0402**
—	4.0945	104.00	7/16	**158T-104**	**138T-104**
4-1/8	4.1250	104.78	7/16	**158T-0404**	**138T-0404**
—	4.1732	106.00	7/16	**158T-106**	**138T-106**
4-3/16	4.1875	106.36	7/16	**158T-0406**	**138T-0406**
4-1/4	4.2500	107.95	7/16	**158T-0408**	**138T-0408**
—	4.2520	108.00	7/16	**158T-108**	**138T-108**
4-5/16	4.3125	109.54	7/16	**158T-0410**	**138T-0410**
—	4.3307	110.00	7/16	**158T-110**	**138T-110**
4-3/8	4.3750	111.13	7/16	**158T-0412**	**138T-0412**
—	4.4094	112.00	7/16	**158T-112**	**138T-112**
4-7/16	4.4375	112.71	7/16	**158T-0414**	**138T-0414**
—	4.4882	114.00	7/16	**158T-114**	**138T-114**
4-1/2	4.5000	114.30	7/16	**158T-0416**	**138T-0416**

*Available as nonstocked standard.

A30: 112 - 143

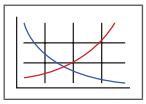

Key on A30: 1

A30: 106 - 108

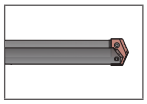

A30: 4 - 6

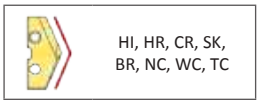

Inserts sold in quantities of 1.

Coatings not listed above can be supplied as nonstocked standards. Process fees apply.

TiN = 158T-XXXX	**TiAlN** = 158A-XXXX
TiCN = 158N-XXXX	**AM200®** = 158H-XXXX

T-A® Drill Insert Holders

7 Series | Flange Shank | Diameter Range: 3.5080" - 4.507" (89.10 mm - 101.60 mm)

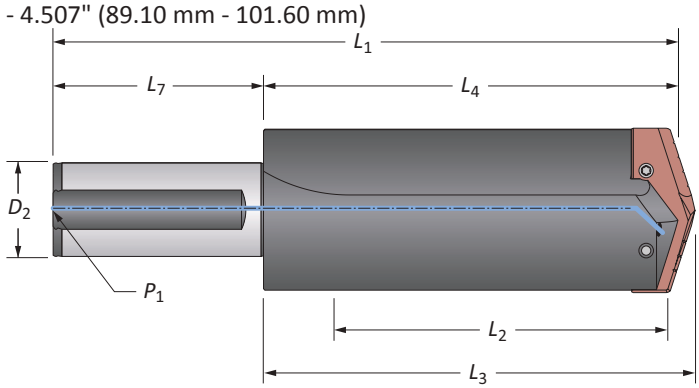

Straight Flute

	Length	Body L_2	Body L_4	Body L_3	Body L_1	Shank D_2	Shank L_7	Shank P_1	Part No.
i	Short	6.042	8.875	9.125	13.375	2	4.500	1/2 NPT	**22070S-200F**
	Extended	21.986	23.894	24.144	28.394	2	4.500	1/2 NPT	⚠ **25070S-200F**
m	Short	178.9	225.4	231.8	305.4	50	80.0	1/2 BSPT	**22070S-50FM**
	Extended	558.4	606.9	613.3	686.9	50	80.0	1/2 BSPT	⚠ **25070S-50FM**

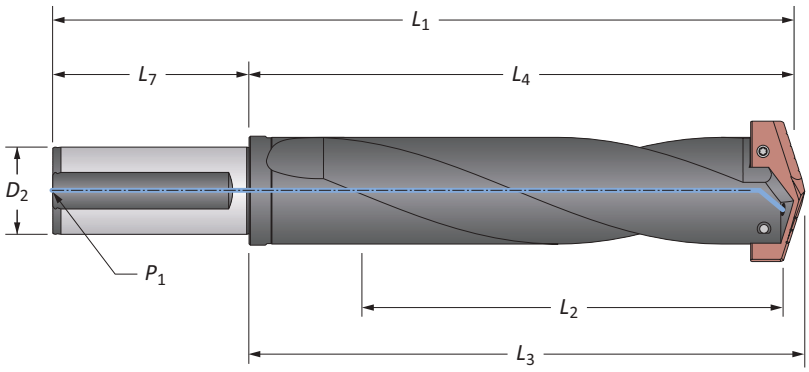

Helical Flute

	Length	Body L_2	Body L_4	Body L_3	Body L_1	Shank D_2	Shank L_7	Shank P_1	Part No.
i	Standard	11.161	12.875	13.125	17.375	2	4.500	1/2 NPT	**24070H-200F**
m	Standard	283.5	327.0	333.4	407.0	50	80.0	1/2 BSPT	**24070H-50FM**

Connection Accessories

Insert Screws	Nylon Locking Screws	Insert Driver	Preset Torque Hand Driver	Replacement Tips	Admissible Tightening Torque*
7619-IP25-1	–	8IP-25	–	–	155.0 in-lbs (1750 N-cm)

*Tightening torques are calculated with a friction coefficient of μ = 0.14 and develop 90% of ultimate yield strength.

A30: 102 - 105

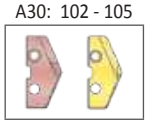

Key on A30: 1

i = Imperial (in)
m = Metric (mm)
Screws sold in quantities of 10.

⚠ **WARNING** Refer to Speed and Feed charts for recommended adjustments to speeds and feeds. Refer to page A30: 146 for deep hole drilling guidelines in this section of the catalog. Visit **www.alliedmachine.com/DeepHoleGuidelines** for the most up-to-date information and procedures. Factory technical assistance is available for your specific applications through our Application Engineering Team.

T-A® Drill Insert Holders

7 Series | Taper Shank | Diameter Range: 3.508" - 4.507" (89.10 mm - 101.60 mm)

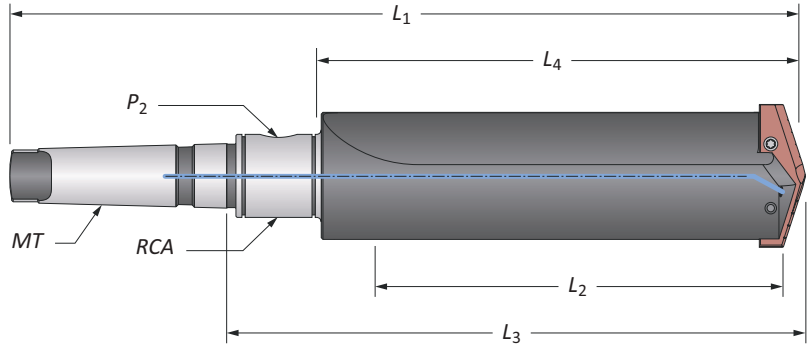

Straight Flute

	Length	Body L_2	Body L_4	Body L_3	Body L_1	Shank MT*	Shank P_2	Shank RCA	Part No.
i	Short	6.979	8.875	11.687	17.312	#5 MT	1/2 NPT	2T-6SR	**22070S-005I**
	Standard	10.979	12.875	15.687	21.312	#5 MT	1/2 NPT	2T-6SR	**24070S-005I**
	Extended	22.104	24.000	26.812	32.437	#5 MT	1/2 NPT	2T-6SR	⚠ **25070S-005I**
	XL	27.229	29.125	31.937	37.562	#5 MT	1/2 NPT	2T-6SR	⚠ **27070S-005I**
	3XL	37.229	39.125	41.937	47.562	#5 MT	1/2 NPT	2T-6SR	⚠ **29070S-005I**
m	Short	177.2	225.4	296.8	439.7	#5 MT ISO	1/2 BSPT	2T-6SRM	**22070S-005M**
	Extended	561.3	609.6	681.0	823.9	#5 MT ISO	1/2 BSPT	2T-6SRM	⚠ **25070S-005M**
	XL	691.5	739.8	811.2	954.1	#5 MT ISO	1/2 BSPT	2T-6SRM	⚠ **27070S-005M**
	3XL	945.5	993.8	1065.2	1208.1	#5 MT ISO	1/2 BSPT	2T-6SRM	⚠ **29070S-005M**

*MT ISO 296 type BEK.

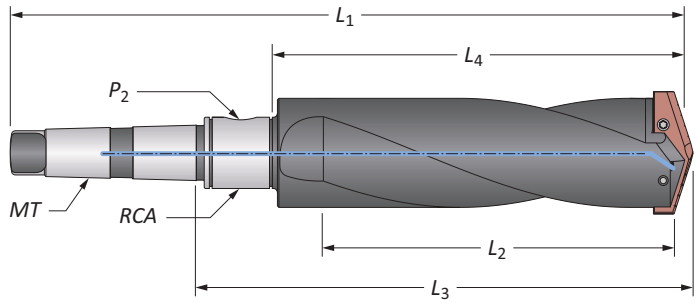

Helical Flute

	Length	Body L_2	Body L_4	Body L_3	Body L_1	Shank MT*	Shank P_2	Shank RCA	Part No.
m	Standard	290.5	327.0	398.4	541.3	#5 MT ISO	1/2 BSPT	2T-6SRM	**24070H-005M**

*MT ISO 296 type BEK.

Connection Accessories

Insert Screws	Nylon Locking Screws	Insert Driver	Preset Torque Hand Driver	Replacement Tips	Admissible Tightening Torque*
7619-IP25-1	–	8IP-25	–	–	155.0 in-lbs (1750 N-cm)

*Tightening torques are calculated with a friction coefficient of μ = 0.14 and develop 90% of ultimate yield strength.

A30: 102 - 105

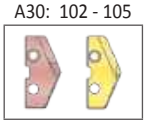

Key on A30: 1

A30: 109 & 110

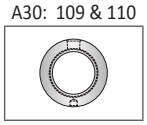

i = Imperial (in)
m = Metric (mm)
Screws sold in quantities of 10.

⚠ **WARNING** Refer to Speed and Feed charts for recommended adjustments to speeds and feeds. Refer to page A30: 146 for deep hole drilling guidelines in this section of the catalog. Visit **www.alliedmachine.com/DeepHoleGuidelines** for the most up-to-date information and procedures. Factory technical assistance is available for your specific applications through our Application Engineering Team.

T-A® Drill Insert Holders

7 Series | Straight Shank | Diameter Range: 3.508" - 4.507" (89.10 mm - 101.60 mm)

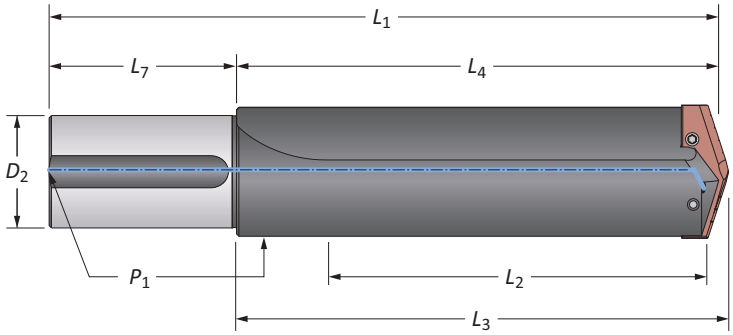

Straight Flute

	Length	Body L_2	Body L_4	Body L_3	Body L_1	Shank D_2	Shank L_7	Shank P_1	Part No.
	Short	6.217	8.875	9.125	13.875	3	5.000	1/2 NPT	**22070S-300L**
	Standard	10.217	12.875	13.125	17.875	3	5.000	1/2 NPT	**24070S-300L**
ⓘ	Extended	21.342	24.000	24.250	29.000	3	5.000	1/2 NPT	⚠ **25070S-300L**
	XL	26.467	29.125	29.375	34.125	3	5.000	1/2 NPT	⚠ **27070S-300L**
	3XL	36.467	39.125	39.375	44.125	3	5.000	1/2 NPT	⚠ **29070S-300L**

Connection Accessories

Insert Screws	Nylon Locking Screws	Insert Driver	Preset Torque Hand Driver	Replacement Tips	Admissible Tightening Torque*
7619-IP25-1	–	8IP-25	–	–	155.0 in-lbs (1750 N-cm)

*Tightening torques are calculated with a friction coefficient of μ = 0.14 and develop 90% of ultimate yield strength.

A30: 102 - 105

ⓘ = Imperial (in)
ⓜ = Metric (mm)
Screws sold in quantities of 10.

⚠ **WARNING** Refer to Speed and Feed charts for recommended adjustments to speeds and feeds. Refer to page A30: 146 for deep hole drilling guidelines in this section of the catalog. Visit **www.alliedmachine.com/DeepHoleGuidelines** for the most up-to-date information and procedures. Factory technical assistance is available for your specific applications through our Application Engineering Team.

T-A® Drill Accessories

7/8 Series | Rotary Coolant Adapters | Torx® Plus Screws

Rotary Coolant Adapter (RCA) and Accessories

	ID	OD	L_1	Driving Rod Thread	P_1	Part No.	RCA O-Rings Kit Part No.**	RCA O-Rings Replacements
i	2.250	3.750	1.750	1/2" - 13	1/2 NPT	⚠ 2T-6SR	2T1-6SR	2T1-6OR-10
m	57.2	95.3	44.5	M10 x 1.50	1/2 BSPT	⚠ 2T-6SRM	2T1-6SR	2T1-6OR-10

*RCA Repair Kit includes (2) O-rings, (2) snap rings, and (2) thrust washers.

⚠ Refer to page A30: 110 for proper RCA assembly and safety information.

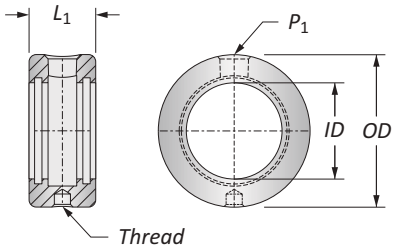

Connection Accessories

Insert Screws	Nylon Locking Screws	Insert Driver	Preset Torque Hand Driver	Replacement Tips	Admissible Tightening Torque*
7619-IP25-1	–	8IP-25	–	–	155.0 in-lbs (1750 N-cm)

*Tightening torques are calculated with a friction coefficient of μ = 0.14 and develop 90% of ultimate yield strength.

A30: 102 - 105

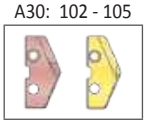

Key on A30: 1

A30: 106 - 108

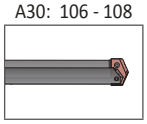

i = Imperial (in)
m = Metric (mm)
Inserts sold separately.
Screws sold in quantities of 10.
O-rings sold in packs of 10.

⚠ WARNING Refer to Speed and Feed charts for recommended adjustments to speeds and feeds. Refer to page A30: 146 for deep hole drilling guidelines in this section of the catalog. Visit **www.alliedmachine.com/DeepHoleGuidelines** for the most up-to-date information and procedures. Factory technical assistance is available for your specific applications through our Application Engineering Team.

Rotary Coolant Adapters (RCA)

Morse Taper Shanks

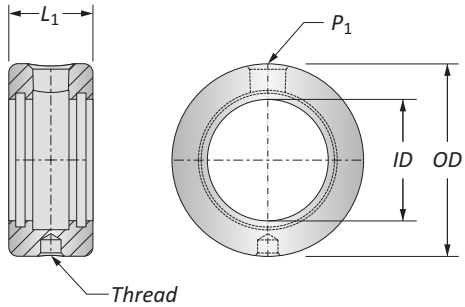

	Holder Series	*ID*	*OD*	L_1	Driving Rod Thread	P_1	Part No.	Max Recommended RPM	RCA O-Rings Kit Part No.*	RCA O-Rings Replacements
i	Y, Z, 0	0.750	1.750	0.875	5/16" - 18	1/8 NPT	⚠ 2T-2SR	3500	2T1-2SR	2T1-2OR-10
	1, 2	1.000	2.125	1.125	5/16" - 18	1/8 NPT	⚠ 2T-3SR	2500	2T1-3SR	2T1-3OR-10
	2, 3, 4	1.250	2.500	1.375	3/8" - 16	1/4 NPT	⚠ 2T-4SR	2000	2T1-4SR	2T1-4OR-10
	3, 4	1.750	3.000	1.375	3/8" - 16	1/4 NPT	⚠ 2T-5SR	1500	2T1-5SR	2T1-5OR-10
	5, 7	2.250	3.750	1.750	1/2" - 13	1/2 NPT	⚠ 2T-6SR	1100	2T1-6SR	2T1-6OR-10
m	Y, Z, 0	19.1	44.5	22.2	M8 x 1.25	1/8 BSPT	⚠ 2T-2SRM	3500	2T1-2SR	2T1-2OR-10
	1, 2	25.4	54.0	28.6	M8 x 1.25	1/8 BSPT	⚠ 2T-3SRM	2500	2T1-3SR	2T1-3OR-10
	2, 3, 4	31.8	63.5	34.9	M10 x 1.50	1/4 BSPT	⚠ 2T-4SRM	2000	2T1-4SR	2T1-4OR-10
	3, 4	44.5	76.2	34.9	M10 x 1.50	1/4 BSPT	⚠ 2T-5SRM	1500	2T1-5SR	2T1-5OR-10
	5, 7	57.2	95.3	44.5	M10 x 1.50	1/2 BSPT	⚠ 2T-6SRM	1100	2T1-6SR	2T1-6OR-10

*RCA Repair Kit includes (2) O-rings, (2) snap rings, and (2) thrust washers.
NOTE: Max recommended pressure is 600 PSI (42 bar).
NOTE: Recommendations above are based on water and oil based coolants.

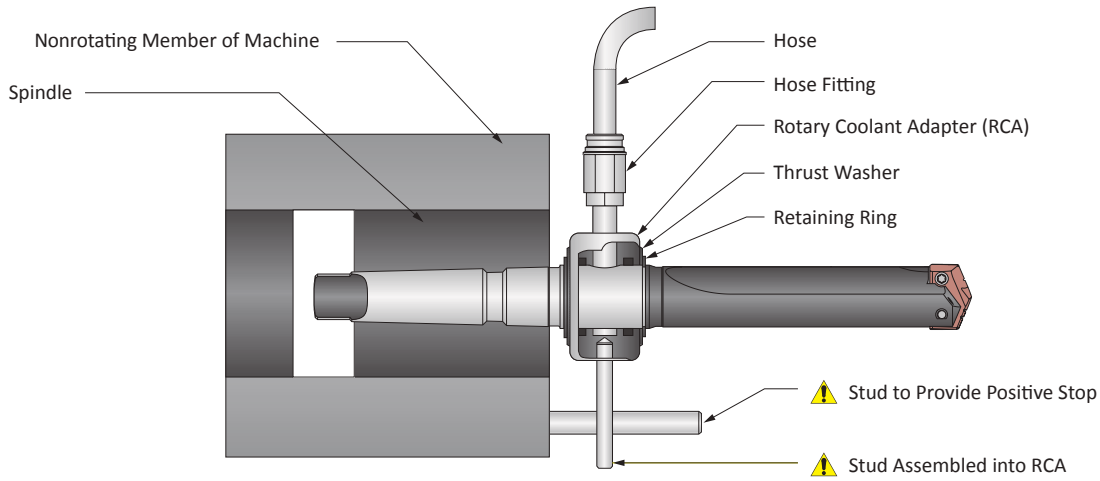

i = Imperial (in)
m = Metric (mm)
O-rings sold in packs of 10.

⚠ WARNING RCA rotation during drilling can cause hose and/or hose fitting failure, machinery damage, and/or serious injury. To prevent, use RCA and positive stop studs when drilling. Factory technical assistance is also available for your specific applications.

T-ACR 45 Chamfer Rings

Straight Flute Holders

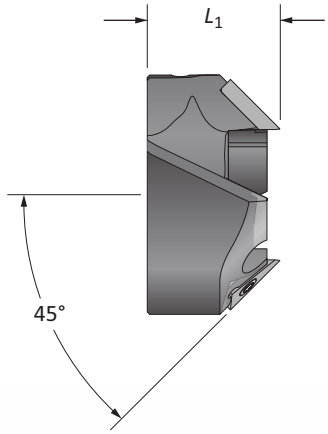

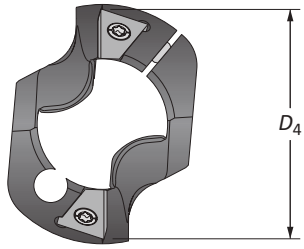

Holder Series	D_1 Range	Chamfer Ring D_4	Chamfer Ring L_1	Part No.	Insert Part No.	Insert Screw	Insert Driver	Clamping Screw	Insert Driver
0	0.5118 - 0.6890	1.148	0.676	**T-ACR-45-0**	T-ACRI-45-B-C5A	7255-IP8-1	8IP-8	7375-IP9-1	8IP-9
1	0.6900 - 0.8540	1.330	0.797	**T-ACR-45-1**	T-ACRI-45-B-C5A	7255-IP8-1	8IP-8	7495-IP15-1	8IP-15
1.5	0.8540 - 0.9600	1.493	0.891	**T-ACR-45-1.5**	T-ACRI-45-B-C5A	7255-IP8-1	8IP-8	7495-IP15-1	8IP-15
2	0.9610 - 1.3800	1.598	1.000	**T-ACR-45-2**	T-ACRI-45-B-C5A	7255-IP8-1	8IP-8	7514-IP20-1	8IP-20

Highlights and Other Information

- Produces a 45° chamfer only.
- Clamping screw allows for setting at any length along the flute.
- Double effective cutting with face mounted inserts provides increased feed rates and greater insert strength.
- The ring is balanced to match the holder center of gravity to ensure stability.
- Inserts only available in C5 carbide and TiAlN coating.
- Ideal for short-run or time-sensitive jobs that require quick delivery.

IMPORTANT: T-A chamfer rings can only be used with straight flute T-A holders.

Inserts sold in quantities of 2.
Screws sold in quantities of 10.

GEN2 T-A® Recommended Drilling Data | Imperial (inch)

HSS Inserts

ISO	Material	Hardness (BHN)	HSS Grade	SFM TiN	SFM AM200®	Feed Rate (IPR) by Diameter 3/8" - 1/2"	Feed Rate (IPR) by Diameter 33/64" - 11/16"
P	**Free-Machining Steel** 1118, 1215, 12L14, etc.	100 - 150	HSS	200	325	0.008	0.012
		150 - 200	HSS	180	300	0.007	0.011
		200 - 250	HSS	160	280	0.006	0.010
	Low-Carbon Steel 1010, 1020, 1025, 1522, 1144, etc.	85 - 125	HSS	170	290	0.008 ❖	0.010
		125 - 175	HSS	160	275	0.007 ❖	0.010
		175 - 225	HSS	150	260	0.006 ❖	0.009
		225 - 275	HSS	140	240	0.005 ❖	0.009
	Medium-Carbon Steel 1030, 1040, 1050, 1527, 1140, 1151, etc.	125 - 175	HSS	160	275	0.007	0.010
		175 - 225	HSS	150	260	0.006	0.009
		225 - 275	HSS	140	240	0.006	0.009
		275 - 325	SC	130	225	0.005	0.008
	Alloy Steel 4140, 5140, 8640, etc.	125 - 175	HSS	150	240	0.007	0.010
		175 - 225	HSS	140	225	0.006	0.009
		225 - 275	HSS	130	210	0.006	0.009
		275 - 325	SC	120	195	0.005	0.008
		325 - 375	SC	110	180	0.004	0.007
	High-Strength Alloy 4340, 4330V, 300M, etc.	225 - 300	SC	80	125	0.006 ❖	0.009
		300 - 350	SC	60	100	0.005 ❖	0.008
		350 - 400	SC	50	80	0.004 ❖	0.007
	Structural Steel A36, A285, A516, etc.	100 - 150	HSS	140	235	0.008 ❖	0.011
		150 - 250	HSS	120	190	0.006 ❖	0.010
		250 - 350	SC	100	160	0.005 ❖	0.009
	Tool Steel H-13, H-21, A-4, 0-2, S-3, etc.	150 - 200	SC	80	125	0.004	0.007
		200 - 250	SC	60	105	0.004	0.007
S	**High-Temp Alloy** Hastelloy B, Inconel 600, etc.	140 - 220	SC	30	45	0.004 ❖	0.007
		220 - 310	SC	25	40	0.004 ❖	0.006
	Titanium Alloy	140 - 220	SC	35	55	0.004 ❖	0.007
		220 - 310	SC	30	50	0.003 ❖	0.006
	Aerospace Alloy S82	185 - 275	SC	75	110	0.006 ❖	0.008
		275 - 350	SC	60	100	0.005 ❖	0.007
M	**Stainless Steel 400 Series** 416, 420, etc.	185 - 275	SC	75	110	0.006 ❖	0.008
		275 - 350	SC	60	100	0.005 ❖	0.007
	Stainless Steel 300 Series 304, 316, 17-4PH, etc.	135 - 185	SC	75	110	0.003 ❖	0.007
		185 - 275	SC	60	100	0.003 ❖	0.006
	Super Duplex Stainless Steel	135 - 185	SC	60	85	0.003 ❖	0.007
		185 - 275	SC	50	70	0.003 ❖	0.006
H	**Wear Plate** Hardox®, AR400, T-1, etc.	400	SC	45	70	0.003 ❖	0.006
		500	SC	35	45	0.002 ❖	0.005
		600	–	–	–	0.004 ❖	0.006
	Hardened Steel	300 - 400	SC	50	95	–	–
		400 - 500	SC	35	45	0.002 ❖	0.005
K	**Nodular, Grey, Ductile Cast Iron**	120 - 150	HSS	170	290	0.008	0.012
		150 - 200	HSS	150	260	0.007	0.011
		200 - 220	HSS	130	225	0.006	0.009
		220 - 260	SC	110	190	0.005	0.008
		260 - 320	SC	90	155	0.005	0.007
N	**Cast Aluminum**	30	HSS	600	–	0.009	0.015
		180	HSS	300	–	0.008	0.013
	Wrought Aluminum	30	HSS	600	900	0.005	0.013
		180	HSS	300	650	0.005	0.007
	Aluminum Bronze	100 - 200	SC	170	270	0.006	0.009
		200 - 250	SC	130	210	0.005	0.007
	Brass	100	HSS	300	470	0.007	0.011
	Copper	60	SC	130	190	0.003 ❖	0.004

❖ Contact our Application Engineering department for assistance when machining these materials.

IMPORTANT: The speeds and feeds listed above are a general starting point for all applications. Refer to the Coolant Recommendation charts for coolant requirements to run at the recommended speeds and feeds. Factory technical assistance is available through our Application Engineering department. See adjustment examples on the following page.

Feed Rate (IPR) by Diameter				
45/64" - 15/16"	31/32" - 1-3/8"	1-13/32" - 1-7/8"	1-29/32" - 2-9/16"	2-19/32" - 4-1/2"
0.016	0.019	0.020	0.023	0.028
0.015	0.017	0.020	0.023	0.028
0.014	0.016	0.020	0.023	0.028
0.014	0.018	0.019	0.023	0.027
0.014	0.017	0.019	0.023	0.027
0.013	0.016	0.018	0.021	0.024
0.013	0.016	0.018	0.021	0.024
0.014	0.017	0.019	0.023	0.027
0.013	0.016	0.018	0.021	0.024
0.013	0.016	0.018	0.021	0.024
0.012	0.015	0.016	0.019	0.022
0.014	0.017	0.017	0.019	0.022
0.013	0.016	0.017	0.019	0.022
0.013	0.016	0.017	0.019	0.022
0.012	0.015	0.015	0.017	0.020
0.011	0.014	0.015	0.017	0.020
0.011	0.013	0.014	0.017	0.020
0.010	0.012	0.014	0.017	0.020
0.009	0.011	0.012	0.015	0.018
0.015	0.017	0.018	0.021	0.026
0.013	0.015	0.016	0.019	0.024
0.012	0.013	0.014	0.017	0.020
0.010	0.012	0.012	0.015	0.017
0.010	0.012	0.012	0.015	0.017
0.009	0.011	0.012	0.015	0.017
0.008	0.010	0.010	0.012	0.014
0.008	0.010	0.012	0.015	0.017
0.007	0.009	0.010	0.012	0.014
0.009	0.011	0.014	0.016	0.020
0.008	0.010	0.012	0.014	0.018
0.009	0.011	0.014	0.016	0.020
0.008	0.010	0.012	0.014	0.018
0.008	0.011	0.014	0.016	0.020
0.007	0.010	0.012	0.014	0.018
0.008	0.011	0.014	0.016	0.020
0.007	0.010	0.012	0.014	0.018
0.008	0.009	0.012	0.016	0.018
0.007	0.008	0.010	0.012	0.016
0.009	0.011	0.012	0.016	0.018
–	–	–	–	–
0.007	0.009	0.010	0.012	0.016
0.016	0.020	0.024	0.027	0.030
0.015	0.019	0.022	0.025	0.028
0.013	0.017	0.018	0.021	0.024
0.011	0.014	0.014	0.017	0.020
0.010	0.012	0.012	0.014	0.016
0.018	0.023	0.022	0.025	0.025
0.016	0.020	0.022	0.025	0.025
0.016	0.020	0.022	0.025	0.025
0.012	0.014	0.022	0.025	0.025
0.012	0.015	0.017	0.019	0.021
0.009	0.011	0.014	0.016	0.018
0.013	0.018	0.019	0.021	0.023
0.007	0.010	0.009	0.011	0.012

Deep Hole Drilling Speed and Feed Adjustment

	Holder Length				
	Extended	Long	Long Plus	XL	3XL
Speed	0.90	0.85	0.80	0.80	0.75
Feed	–	0.95	0.90	0.90	0.90

Recommended Speed and Feed Example

If the recommended speed and feed is 200 SFM and 0.008 IPR for a standard length holder, then the speed and feed using a 3XL holder in the same application would be 150 SFM and 0.007 IPR.

200 • 0.75 = 150 SFM	0.008 • 0.90 = 0.007 IPR

Formulas

1. **RPM = (3.82 • SFM) / DIA**

   where:
   RPM = revolutions per minute (rev/min)
   SFM = speed (ft/min)
   DIA = diameter of drill (inch)

2. **IPM = RPM • IPR**

   where:
   IPM = inches per minute (in/min)
   RPM = revolutions per minute (rev/min)
   IPR = feed rate (in/rev)

3. **SFM = RPM • 0.262 • DIA**

   where:
   SFM = speed (ft/min)
   RPM = revolutions per minute (rev/min)
   DIA = diameter of drill (inch)

WARNING **Tool failure can cause serious injury. To prevent:**
- When using holders without support bushing, use a short T-A® holder to establish an initial hole that is a minimum of 2 diameters deep.
- Do not rotate tool holder more than 50 RPM unless it is engaged with the workpiece or fixture.

Visit **www.alliedmachine.com/DeepHoleGuidelines** for the most up-to-date information and procedures. Factory technical assistance is available for your specific applications through our Application Engineering Team.

GEN2 T-A® Recommended Drilling Data | Imperial (inch)

Carbide Inserts

ISO	Material	Hardness (BHN)	Carbide Grade	SFM AM300®	Feed Rate (IPR) by Diameter 3/8" - 1/2"	33/64" - 11/16"	45/64" - 15/16"	31/32" - 1-3/8"
P	**Free-Machining Steel** 1118, 1215, 12L14, etc.	100 - 150	C1	480	0.008	0.012	0.016	0.019
		150 - 200	C1	415	0.007	0.011	0.015	0.017
		200 - 250	C1	390	0.006	0.010	0.014	0.016
	Low-Carbon Steel 1010, 1020, 1025, 1522, 1144, etc.	85 - 125	C1	450	0.008 ❖	0.010	0.014	0.018
		125 - 175	C1	390	0.007 ❖	0.010	0.014	0.017
		175 - 225	C1	355	0.006 ❖	0.009	0.013	0.016
		225 - 275	C1	310	0.005 ❖	0.009	0.013	0.016
	Medium-Carbon Steel 1030, 1040, 1050, 1527, 1140, 1151, etc.	125 - 175	C1	390	0.007	0.010	0.014	0.017
		175 - 225	C1	355	0.006	0.009	0.013	0.016
		225 - 275	C1	310	0.006	0.009	0.013	0.016
		275 - 325	C1	265	0.005	0.008	0.012	0.015
	Alloy Steel 4140, 5140, 8640, etc.	125 - 175	C1	375	0.007	0.010	0.014	0.017
		175 - 225	C1	345	0.006	0.009	0.013	0.016
		225 - 275	C1	310	0.006	0.009	0.013	0.016
		275 - 325	C1	285	0.005	0.008	0.012	0.015
		325 - 375	C1	255	0.004	0.007	0.011	0.014
	High-Strength Alloy 4340, 4330V, 300M, etc.	225 - 300	C1	230	0.006 ❖	0.009	0.011	0.013
		300 - 350	C1	205	0.005 ❖	0.008	0.010	0.012
		350 - 400	C1	185	0.004 ❖	0.007	0.009	0.011
	Structural Steel A36, A285, A516, etc.	100 - 150	C1	355	0.008 ❖	0.011	0.015	0.017
		150 - 250	C1	285	0.006 ❖	0.010	0.013	0.015
		250 - 350	C1	265	0.005 ❖	0.009	0.012	0.013
	Tool Steel H-13, H-21, A-4, 0-2, S-3, etc.	150 - 200	C1	255	0.007	0.007	0.010	0.012
		200 - 250	C1	195	0.007	0.007	0.010	0.012
S	**High-Temp Alloy** Hastelloy B, Inconel 600, etc.	140 - 220	C2	120	0.004 ❖	0.007	0.009	0.011
		220 - 310	C2	95	0.004 ❖	0.006	0.008	0.010
	Titanium Alloy	140 - 220	C2	140	0.004 ❖	0.007	0.008	0.011
		220 - 310	C2	110	0.003 ❖	0.006	0.007	0.009
	Aerospace Alloy S82	185 - 275	C2	240	0.005 ❖	0.006	0.007	0.009
		275 - 350	C2	180	0.004 ❖	0.005	0.006	0.008
M	**Stainless Steel 400 Series** 416, 420, etc.	185 - 275	C2	240	0.007 ❖	0.009	0.012	0.014
		275 - 350	C2	180	0.006 ❖	0.008	0.011	0.012
	Stainless Steel 300 Series 304, 316, 17-4PH, etc.	135 - 185	C2	240	0.006 ❖	0.007	0.009	0.012
		185 - 275	C2	180	0.005 ❖	0.006	0.008	0.009
	Super Duplex Stainless Steel	135 - 185	C2	125	0.005 ❖	0.007	0.008	0.010
		185 - 275	C2	100	0.004 ❖	0.006	0.007	0.009

❖ Contact our Application Engineering department for assistance when machining these materials.

IMPORTANT: The speeds and feeds listed above are a general starting point for all applications. Refer to the Coolant Recommendation charts for coolant requirements to run at the recommended speeds and feeds. Factory technical assistance is available through our Application Engineering department. See adjustment examples on the following page.

ISO	Material	Hardness (BHN)	Carbide Grade	SFM AM300®	Feed Rate (IPR) by Diameter 3/8" - 1/2"	33/64" - 11/16"	45/64" - 15/16"	31/32" - 1-3/8"
H	**Wear Plate** Hardox®, AR400, T-1, etc.	400	C2	150	0.003 ❖	0.005	0.008	0.010
		500	C2	120	0.002 ❖	0.004	0.006	0.008
		600	C2	100	0.001 ❖	0.003	0.005	0.006
	Hardened Steel	300 - 400	C1	150	0.004 ❖	0.006	0.009	0.011
		400 - 500	C1	120	0.003 ❖	0.005	0.008	0.010
K	**Nodular, Grey, Ductile Cast Iron**	120 - 150	C2	500	0.008	0.012	0.015	0.019
		150 - 200	C2	480	0.007	0.011	0.013	0.017
		200 - 220	C2	430	0.006	0.009	0.012	0.015
		220 - 260	C2	370	0.005	0.008	0.011	0.013
		260 - 320	C2	335	0.005	0.007	0.010	0.011
N	**Cast Aluminum**	30	C2	975	0.009	0.015	0.018	0.023
		180	C2	730	0.008	0.013	0.016	0.020
	Wrought Aluminum	30	C2	1385	0.005	0.013	0.016	0.020
		180	C2	975	0.005	0.007	0.012	0.014
	Aluminum Bronze	100 - 200	C2	360	0.006	0.009	0.012	0.015
		200 - 250	C2	300	0.005	0.007	0.009	0.011
	Brass	100	C2	650	0.007	0.011	0.013	0.018
	Copper	60	C2	420	0.003 ❖	0.004	0.007	0.010

❖ Contact our Application Engineering department for assistance when machining these materials.

Deep Hole Drilling Speed and Feed Adjustment

	⚠ Holder Length				
	Extended	**Long**	**Long Plus**	**XL**	**3XL**
Speed	0.90	0.85	0.80	0.80	0.75
Feed	–	0.95	0.90	0.90	0.90

Recommended Speed and Feed Example

If the recommended speed and feed is 200 SFM and 0.008 IPR for a standard length holder, then the speed and feed using a 3XL holder in the same application would be 150 SFM and 0.007 IPR.

200 • 0.75 = 150 SFM	0.008 • 0.90 = 0.007 IPR

Formulas

1. **RPM = (3.82 • SFM) / DIA**

where:

RPM = revolutions per minute (rev/min)
SFM = speed (ft/min)
DIA = diameter of drill (inch)

2. **IPM = RPM • IPR**

where:

IPM = inches per minute (in/min)
RPM = revolutions per minute (rev/min)
IPR = feed rate (in/rev)

3. **SFM = RPM • 0.262 • DIA**

where:

SFM = speed (ft/min)
RPM = revolutions per minute (rev/min)
DIA = diameter of drill (inch)

⚠ WARNING **Tool failure can cause serious injury. To prevent:**

- When using holders without support bushing, use a short T-A® holder to establish an initial hole that is a minimum of 2 diameters deep.
- Do not rotate tool holder more than 50 RPM unless it is engaged with the workpiece or fixture.

Visit **www.alliedmachine.com/DeepHoleGuidelines** for the most up-to-date information and procedures. Factory technical assistance is available for your specific applications through our Application Engineering Team.

T-A® Recommended Drilling Data | Imperial (inch)

HSS Inserts

ISO	Material	Hardness (BHN)	HSS Grade	SFM TiN	SFM TiAlN	SFM TiCN	Feed Rate (IPR) by Diameter 3/8" - 1/2"	Feed Rate (IPR) by Diameter 33/64" - 11/16"
P	**Free-Machining Steel**	100 - 150	HSS	200	280	260	0.007	0.010
	1118, 1215, 12L14, etc.	150 - 200	HSS	180	260	235	0.007	0.010
		200 - 250	HSS	160	240	210	0.006	0.010
	Low-Carbon Steel	85 - 125	HSS	170	250	220	0.006 ❖	0.009
	1010, 1020, 1025, 1522, 1144, etc.	125 - 175	HSS	160	240	210	0.006 ❖	0.009
		175 - 225	HSS	150	225	195	0.005 ❖	0.008
		225 - 275	HSS	140	210	180	0.005 ❖	0.008
	Medium-Carbon Steel	125 - 175	HSS	160	240	210	0.006	0.009
	1030, 1040, 1050, 1527, 1140, 1151, etc.	175 - 225	HSS	150	225	195	0.005	0.008
		225 - 275	HSS	140	210	180	0.005	0.008
		275 - 325	SC, PC	130	195	170	0.004	0.007
	Alloy Steel	125 - 175	HSS	150	210	195	0.006	0.008
	4140, 5140, 8640, etc.	175 - 225	HSS	140	195	180	0.005	0.008
		225 - 275	HSS	130	180	170	0.005	0.007
		275 - 325	SC, PC	120	170	155	0.004	0.006
		325 - 375	SC, PC	110	155	145	0.003	0.006
	High-Strength Alloy	225 - 300	SC, PC	80	110	100	0.005 ❖	0.007
	4340, 4330V, 300M, etc.	300 - 350	SC, PC	60	85	80	0.004 ❖	0.007
		350 - 400	PC	50	70	65	0.003 ❖	0.006
	Structural Steel	100 - 150	HSS	140	200	180	0.006 ❖	0.010
	A36, A285, A516, etc.	150 - 250	HSS	120	170	155	0.005 ❖	0.009
		250 - 350	SC, PC	100	140	130	0.003 ❖	0.008
	Tool Steel	150 - 200	SC	80	110	105	0.004	0.006
	H-13, H-21, A-4, 0-2, S-3, etc.	200 - 250	SC, PC	60	90	85	0.004	0.006
S	**High-Temp Alloy**	140 - 220	SC, PC	30	40	35	0.003 ❖	0.007
	Hastelloy B, Inconel 600, etc.	220 - 310	PC	25	35	30	0.003 ❖	0.006
	Titanium Alloy	140 - 220	SC, PC	35	50	45	0.003 ❖	0.007
		220 - 310	PC	30	45	35	0.003 ❖	0.006
	Aerospace Alloy	185 - 275	SC, PC	75	105	95	0.006 ❖	0.008
	S82	275 - 350	SC, PC	60	90	80	0.005 ❖	0.007
M	**Stainless Steel 400 Series**	185 - 275	SC, PC	75	105	95	0.009	0.010
	416, 420, etc.	275 - 350	SC, PC	60	90	80	0.008	0.009
	Stainless Steel 300 Series	135 - 185	SC, PC	75	105	95	0.007	0.007
	304, 316, 17-4PH, etc.	185 - 275	SC, PC	60	90	80	0.006	0.006
	Super Duplex Stainless Steel	135 - 185	SC, PC	60	80	70	0.005	0.005
		185 - 275	SC, PC	50	65	60	0.004	0.005
H	**Wear Plate**	400	SC, PC	45	70	55	0.003 ❖	0.006
	Hardox®, AR400, T-1, etc.	500	PC	35	45	40	0.002 ❖	0.005
		600	N/A	–	–	–	–	–
	Hardened Steel	300 - 400	PC	50	95	70	0.003 ❖	0.006
		400 - 500	PC	35	45	40	0.002 ❖	0.005
K	**Nodular, Grey, Ductile Cast Iron**	120 - 150	HSS	170	250	220	0.007	0.012
		150 - 200	HSS	150	225	195	0.006	0.011
		200 - 220	HSS	130	195	170	0.006	0.009
		220 - 260	SC, PC	110	165	145	0.005	0.007
		260 - 320	SC, PC	90	135	120	0.004	0.006
N	**Cast Aluminum**	30	HSS	600	850	750	0.008	0.013
		180	HSS	300	450	400	0.008	0.013
	Wrought Aluminum	30	HSS	600	850	750	0.004	0.006
		180	HSS	300	450	400	0.008	0.013
	Aluminum Bronze	100 - 200	SC	170	250	220	0.006	0.011
		200 - 250	SC	130	190	170	0.005	0.007
	Brass	100	HSS	300	445	400	0.007	0.012
	Copper	60	SC	130	165	150	0.002 ❖	0.003

❖ Contact our Application Engineering department for assistance when machining these materials.

IMPORTANT: The speeds and feeds listed above are a general starting point for all applications. Refer to the Coolant Recommendation charts for coolant requirements to run at the recommended speeds and feeds. Factory technical assistance is available through our Application Engineering department. See adjustment examples on the following page.

Feed Rate (IPR) by Diameter				
45/64" - 15/16"	31/32" - 1-3/8"	1-13/32" - 1-7/8"	1-29/32" - 2-9/16"	2-19/32" - 4-1/2"
0.013	0.016	0.020	0.023	0.028
0.013	0.016	0.020	0.023	0.028
0.013	0.016	0.020	0.023	0.028
0.012	0.015	0.019	0.023	0.027
0.012	0.015	0.019	0.023	0.027
0.010	0.014	0.018	0.021	0.024
0.010	0.014	0.018	0.021	0.024
0.012	0.015	0.019	0.023	0.027
0.010	0.014	0.018	0.021	0.024
0.010	0.014	0.018	0.021	0.024
0.009	0.012	0.016	0.019	0.022
0.010	0.014	0.017	0.019	0.022
0.010	0.014	0.017	0.019	0.022
0.010	0.014	0.017	0.019	0.022
0.009	0.012	0.015	0.017	0.020
0.009	0.012	0.015	0.017	0.020
0.009	0.010	0.014	0.017	0.020
0.009	0.010	0.014	0.017	0.020
0.008	0.009	0.012	0.015	0.018
0.012	0.014	0.018	0.021	0.026
0.010	0.012	0.016	0.019	0.024
0.009	0.010	0.014	0.017	0.020
0.008	0.010	0.012	0.015	0.017
0.008	0.010	0.012	0.015	0.017
0.008	0.010	0.012	0.015	–
0.007	0.008	0.010	0.012	–
0.008	0.010	0.012	0.015	–
0.007	0.008	0.010	0.012	–
0.009	0.010	0.014	0.016	0.020
0.008	0.008	0.012	0.014	0.018
0.011	0.012	0.013	0.014	0.015
0.010	0.011	0.012	0.013	0.014
0.008	0.008	0.009	0.009	0.010
0.007	0.007	0.008	0.008	0.009
0.006	0.006	0.007	0.008	0.008
0.005	0.006	0.006	0.007	0.007
0.008	0.009	0.012	0.016	0.018
0.007	0.008	0.010	0.012	0.016
–	–	–	–	–
0.008	0.009	0.012	0.016	0.018
0.007	0.008	0.010	0.012	0.016
0.016	0.020	0.024	0.027	0.030
0.014	0.018	0.022	0.025	0.028
0.012	0.016	0.018	0.021	0.024
0.009	0.012	0.014	0.017	0.020
0.007	0.009	0.012	0.014	0.016
0.016	0.020	0.022	0.025	0.025
0.016	0.018	0.022	0.025	0.025
0.010	0.012	0.022	0.025	0.025
0.016	0.018	0.022	0.025	0.025
0.014	0.018	0.022	0.026	0.028
0.009	0.012	0.014	0.017	0.020
0.016	0.020	0.024	0.028	0.030
0.006	0.008	0.012	0.014	0.016

Deep Hole Drilling Speed and Feed Adjustment

	Holder Length				
	Extended	Long	Long Plus	XL	3XL
Speed	0.90	0.85	0.80	0.80	0.75
Feed	–	0.95	0.90	0.90	0.90

Recommended Speed and Feed Example

If the recommended speed and feed is 200 SFM and 0.008 IPR for a standard length holder, then the speed and feed using a 3XL holder in the same application would be 150 SFM and 0.007 IPR.

200 • 0.75 = 150 SFM	0.008 • 0.90 = 0.007 IPR

Formulas

1. **RPM = (3.82 • SFM) / DIA**

   where:
   RPM = revolutions per minute (rev/min)
   SFM = speed (ft/min)
   DIA = diameter of drill (inch)

2. **IPM = RPM • IPR**

   where:
   IPM = inches per minute (in/min)
   RPM = revolutions per minute (rev/min)
   IPR = feed rate (in/rev)

3. **SFM = RPM • 0.262 • DIA**

   where:
   SFM = speed (ft/min)
   RPM = revolutions per minute (rev/min)
   DIA = diameter of drill (inch)

WARNING **Tool failure can cause serious injury. To prevent:**
- When using holders without support bushing, use a short T-A® holder to establish an initial hole that is a minimum of 2 diameters deep.
- Do not rotate tool holder more than 50 RPM unless it is engaged with the workpiece or fixture.

Visit **www.alliedmachine.com/DeepHoleGuidelines** for the most up-to-date information and procedures. Factory technical assistance is available for your specific applications through our Application Engineering Team.

T-A® Recommended Drilling Data | Imperial (inch)

Carbide Inserts

ISO	Material	Hardness (BHN)	Carbide Grade	SFM TiN	SFM TiAlN	SFM TiCN	Feed Rate (IPR) by Diameter 3/8" - 1/2"	33/64" - 11/16"	45/64" - 15/16"	31/32" - 1-3/8"	1-13/32" - 1-7/8"
P	**Free-Machining Steel**	100 - 150	C5	320	420	375	0.008	0.012	0.015	0.018	0.021
	1118, 1215, 12L14, etc.	150 - 200	C5	280	360	325	0.007	0.011	0.014	0.016	0.019
		200 - 250	C5	260	340	295	0.006	0.010	0.013	0.015	0.017
	Low-Carbon Steel	85 - 125	C5	300	390	360	0.008 ❖	0.010	0.013	0.017	0.019
	1010, 1020, 1025, 1522,	125 - 175	C5	260	340	295	0.007 ❖	0.010	0.013	0.016	0.018
	1144, etc.	175 - 225	C5	240	310	270	0.006 ❖	0.009	0.012	0.015	0.017
		225 - 275	C5	210	270	245	0.005 ❖	0.009	0.012	0.015	0.017
	Medium-Carbon Steel	125 - 175	C5	260	340	295	0.007	0.010	0.013	0.016	0.018
	1030, 1040, 1050, 1527,	175 - 225	C5	240	310	275	0.006	0.009	0.012	0.015	0.017
	1140, 1151, etc.	225 - 275	C5	210	270	235	0.006	0.009	0.012	0.015	0.017
		275 - 325	C5	180	230	205	0.005	0.008	0.011	0.014	0.016
	Alloy Steel	125 - 175	C5	250	325	285	0.007	0.010	0.013	0.016	0.018
	4140, 5140, 8640, etc.	175 - 225	C5	230	300	260	0.006	0.009	0.012	0.015	0.017
		225 - 275	C5	210	270	235	0.006	0.009	0.012	0.015	0.017
		275 - 325	C5	200	250	225	0.005	0.008	0.011	0.014	0.016
		325 - 375	C5	170	220	195	0.004	0.007	0.010	0.013	0.015
	High-Strength Alloy	225 - 300	C5	160	200	180	0.006 ❖	0.009	0.010	0.012	0.015
	4340, 4330V, 300M, etc.	300 - 350	C5	140	180	160	0.005 ❖	0.008	0.009	0.011	0.014
		350 - 400	C5	120	160	140	0.004 ❖	0.007	0.008	0.010	0.012
	Structural Steel	100 - 150	C5	240	310	275	0.008 ❖	0.011	0.014	0.016	0.018
	A36, A285, A516, etc.	150 - 250	C5	200	250	225	0.006 ❖	0.010	0.012	0.014	0.016
		250 - 350	C5	180	230	205	0.005 ❖	0.009	0.011	0.012	0.014
	Tool Steel	150 - 200	C5	160	220	190	0.004	0.007	0.009	0.011	0.013
	H-13, H-21, A-4, 0-2, S-3, etc.	200 - 250	C5	120	170	145	0.004	0.007	0.009	0.011	0.013
S	**High-Temp Alloy**	140 - 220	C2	80	105	90	0.004 ❖	0.007	0.009	0.011	0.013
	Hastelloy B, Inconel 600, etc.	220 - 310	C2	60	85	70	0.004 ❖	0.006	0.008	0.010	0.012
	Titanium Alloy	140 - 220	C2	100	125	105	0.004 ❖	0.007	0.009	0.011	0.013
		220 - 310	C2	80	110	90	0.004 ❖	0.006	0.008	0.010	0.012
	Aerospace Alloy	185 - 275	C2	160	210	185	0.007 ❖	0.006	0.011	0.014	0.016
	S82	275 - 350	C2	120	160	140	0.006 ❖	0.008	0.010	0.012	0.014
M	**Stainless Steel 400 Series**	185 - 275	C2	160	210	185	0.007 ❖	0.008	0.011	0.014	0.016
	416, 420, etc.	275 - 350	C2	120	160	140	0.006 ❖	0.007	0.010	0.012	0.014
	Stainless Steel 300 Series	135 - 185	C2	160	210	185	0.005 ❖	0.007	0.009	0.010	0.012
	304, 316, 17-4PH, etc.	185 - 275	C2	120	160	140	0.004 ❖	0.006	0.008	0.009	0.010
	Super Duplex Stainless Steel	135 - 185	C2	80	110	95	0.004 ❖	0.007	0.008	0.009	0.011
		185 - 275	C2	60	80	70	0.003 ❖	0.006	0.007	0.008	0.009

❖ Contact our Application Engineering department for assistance when machining these materials.

IMPORTANT: The speeds and feeds listed above are a general starting point for all applications. Refer to the Coolant Recommendation charts for coolant requirements to run at the recommended speeds and feeds. Factory technical assistance is available through our Application Engineering department. See adjustment examples on the following page.

ISO	Material	Hardness (BHN)	Carbide Grade	SFM TiN	SFM TiAlN	SFM TiCN	Feed Rate (IPR) by Diameter 3/8" - 1/2"	33/64" - 11/16"	45/64" - 15/16"	31/32" - 1-3/8"	1-13/32" - 1-7/8"
H	**Wear Plate** Hardox®, AR400, T-1, etc.	400	C5	75	115	100	0.003 ❖	0.006	0.008	0.010	0.012
		500	C5	50	85	70	0.002 ❖	0.005	0.006	0.008	0.010
		600	C5	35	75	55	0.001 ❖	0.004	0.005	0.006	0.008
	Hardened Steel	300 - 400	C5	110	140	130	0.004 ❖	0.006	0.009	0.011	0.013
		400 - 500	C5	65	85	75	0.003 ❖	0.005	0.008	0.009	0.011
K	**Nodular, Grey, Ductile Cast Iron**	120 - 150	C2, C3	320	460	415	0.008	0.012	0.015	0.019	0.023
		150 - 200	C2, C3	270	400	335	0.007	0.011	0.013	0.017	0.021
		200 - 220	C2, C3	240	360	305	0.006	0.009	0.012	0.015	0.018
		220 - 260	C2, C3	210	310	260	0.005	0.008	0.011	0.013	0.015
		260 - 320	C2, C3	180	270	225	0.005	0.007	0.010	0.011	0.013
N	**Cast Aluminum**	30	C2	1200	1500	1330	0.010	0.013	0.018	0.020	0.022
		180	C2	800	1000	900	0.009	0.013	0.016	0.018	0.020
	Wrought Aluminum	30	C2	1200	1500	1330	0.004	0.006	0.010	0.012	0.014
		180	C2	800	1000	900	0.008	0.013	0.014	0.018	0.020
	Aluminum Bronze	100 - 200	C2	275	360	325	0.005	0.008	0.010	0.014	0.017
		200 - 250	C2	210	305	260	0.004	0.007	0.007	0.010	0.013
	Brass	100	C2	425	600	520	0.006	0.009	0.011	0.015	0.018
	Copper	60	C2	260	390	325	0.002 ❖	0.003	0.004	0.006	0.010

❖ Contact our Application Engineering department for assistance when machining these materials.

Deep Hole Drilling Speed and Feed Adjustment

	⚠ Holder Length				
	Extended	Long	Long Plus	XL	3XL
Speed	0.90	0.85	0.80	0.80	0.75
Feed	–	0.95	0.90	0.90	0.90

Recommended Speed and Feed Example

If the recommended speed and feed is 200 SFM and 0.008 IPR for a standard length holder, then the speed and feed using a 3XL holder in the same application would be 150 SFM and 0.007 IPR.

200 • 0.75 = 150 SFM	0.008 • 0.90 = 0.007 IPR

Formulas

1. **RPM = (3.82 • SFM) / DIA**

where:

RPM = revolutions per minute (rev/min)
SFM = speed (ft/min)
DIA = diameter of drill (inch)

2. **IPM = RPM • IPR**

where:

IPM = inches per minute (in/min)
RPM = revolutions per minute (rev/min)
IPR = feed rate (in/rev)

3. **SFM = RPM • 0.262 • DIA**

where:

SFM = speed (ft/min)
RPM = revolutions per minute (rev/min)
DIA = diameter of drill (inch)

⚠ WARNING **Tool failure can cause serious injury. To prevent:**

- When using holders without support bushing, use a short T-A® holder to establish an initial hole that is a minimum of 2 diameters deep.
- Do not rotate tool holder more than 50 RPM unless it is engaged with the workpiece or fixture.

Visit **www.alliedmachine.com/DeepHoleGuidelines** for the most up-to-date information and procedures. Factory technical assistance is available for your specific applications through our Application Engineering Team.

T-A® Recommended Drilling Data | Imperial (inch)

HSS Inserts | Flat Bottom Geometry

ISO	Material	Hardness (BHN)	HSS Grade	SFM TiN	TiAlN	TiCN	AM200®
P	**Free-Machining Steel** 1118, 1215, 12L14, etc.	100 - 150	HSS	170	250	230	290
		150 - 200	HSS	155	230	205	265
		200 - 250	HSS	140	210	185	245
	Low-Carbon Steel 1010, 1020, 1025, 1522, 1144, etc.	85 - 125	HSS	150	220	195	255
		125 - 175	HSS	140	210	185	245
		175 - 225	HSS	130	195	175	225
		225 - 275	HSS	120	185	155	215
	Medium-Carbon Steel 1030, 1040, 1050, 1527, 1140, 1151, etc.	125 - 175	HSS	140	210	185	245
		175 - 225	HSS	130	195	175	225
		225 - 275	HSS	120	185	155	215
		275 - 325	SC	110	175	150	205
	Alloy Steel 4140, 5140, 8640, etc.	125 - 175	HSS	130	185	175	215
		175 - 225	HSS	120	175	155	205
		225 - 275	HSS	110	155	145	180
		275 - 325	SC	105	145	135	170
		325 - 375	SC	95	135	125	155
	High-Strength Alloy 4340, 4330V, 300M, etc.	225 - 300	SC	70	95	85	110
		300 - 350	SC	50	75	70	90
		350 - 400	SC	45	65	60	75
	Structural Steel A36, A285, A516, etc.	100 - 150	HSS	120	170	155	195
		150 - 250	HSS	105	145	135	170
		250 - 350	SC	85	120	110	140
	Tool Steel H-13, H-21, A-4, 0-2, S-3, etc.	150 - 200	SC	70	95	90	110
		200 - 250	SC	50	80	75	95
S	**High-Temp Alloy** Hastelloy B, Inconel 600, etc.	140 - 220	SC	25	35	30	40
		220 - 310	SC	20	30	25	35
	Titanium Alloy	140 - 220	SC	35	45	40	50
		220 - 310	SC	26	40	35	45
	Aerospace Alloy S82	185 - 275	SC	65	90	85	110
		275 - 350	SC	50	80	70	90
M	**Stainless Steel 400 Series** 416, 420, etc.	185 - 275	SC	65	90	85	110
		275 - 350	SC	50	80	70	90
	Stainless Steel 300 Series 304, 316, 17-4PH, etc.	135 - 185	SC	65	90	85	110
		185 - 275	SC	50	80	70	90
	Super Duplex Stainless Steel	135 - 185	SC	65	90	85	110
		185 - 275	SC	50	80	70	90
H	**Wear Plate** Hardox®, AR400, T-1, etc.	400	SC	–	–	–	–
		500	SC	–	–	–	–
		600	N/A	–	–	–	–
	Hardened Steel	300 - 400	SC	45	65	60	80
		400 - 500	SC	25	40	35	45
K	**Nodular, Grey, Ductile Cast Iron**	120 - 150	HSS	150	220	195	255
		150 - 200	HSS	130	195	175	225
		200 - 220	HSS	110	175	150	205
		220 - 260	SC	95	150	125	175
		260 - 320	SC	80	120	105	140
N	**Cast Aluminum**	30	HSS	520	750	650	–
		180	HSS	260	400	350	–
	Wrought Aluminum	30	HSS	520	750	650	850
		180	HSS	260	400	350	450
	Aluminum Bronze	100 - 200	SC	130	190	175	230
		200 - 250	SC	95	150	125	165
	Brass	100	HSS	150	220	190	250
	Copper	60	SC	115	150	130	170

❖ Contact our Application Engineering department for assistance when machining these materials.

IMPORTANT: The speeds and feeds listed above are a general starting point for all applications. Refer to the Coolant Recommendation charts for coolant requirements to run at the recommended speeds and feeds. Factory technical assistance is available through our Application Engineering department. See adjustment examples on the following page.

Feed Rate (IPR) by Diameter					
3/8" - 1/2"	33/64" - 11/16"	45/64" - 15/16"	31/32" - 1-3/8"	1-13/32" - 1-7/8"	1-29/32" - 2-9/16"
0.006	0.009	0.011	0.014	0.016	0.018
0.006	0.009	0.011	0.014	0.016	0.018
0.005	0.009	0.011	0.014	0.015	0.017
0.005 ❖	0.008	0.010	0.013	0.015	0.017
0.005 ❖	0.008	0.010	0.013	0.015	0.016
0.004 ❖	0.007	0.009	0.012	0.014	0.016
0.004 ❖	0.007	0.009	0.012	0.014	0.015
0.005	0.008	0.010	0.013	0.015	0.018
0.004	0.007	0.009	0.012	0.014	0.017
0.004	0.007	0.009	0.012	0.014	0.017
0.004	0.006	0.008	0.010	0.013	0.015
0.005	0.007	0.009	0.012	0.013	0.016
0.004	0.007	0.009	0.012	0.013	0.016
0.004	0.006	0.009	0.012	0.013	0.016
0.004	0.005	0.008	0.010	0.012	0.015
0.003	0.005	0.008	0.010	0.012	0.014
0.004 ❖	0.006	0.008	0.009	0.010	0.012
0.003 ❖	0.006	0.008	0.009	0.010	0.012
0.003 ❖	0.005	0.007	0.008	0.009	0.011
0.005 ❖	0.009	0.010	0.012	0.015	0.017
0.004 ❖	0.008	0.009	0.010	0.013	0.016
0.004 ❖	0.007	0.008	0.009	0.012	0.015
0.004	0.005	0.007	0.009	0.010	0.012
0.004	0.005	0.007	0.009	0.009	0.011
0.003 ❖	0.006	0.007	0.009	0.010	0.012
0.003 ❖	0.005	0.006	0.007	0.008	0.010
0.003 ❖	0.006	0.007	0.009	0.010	0.012
0.003 ❖	0.005	0.006	0.007	0.008	0.010
0.005 ❖	0.007	0.008	0.010	0.012	0.015
0.004 ❖	0.006	0.007	0.009	0.010	0.012
0.005 ❖	0.007	0.008	0.010	0.012	0.014
0.004 ❖	0.006	0.007	0.009	0.010	0.011
0.005 ❖	0.007	0.008	0.010	0.012	0.014
0.004 ❖	0.006	0.007	0.009	0.010	0.011
0.005 ❖	0.007	0.008	0.010	0.012	0.014
0.004 ❖	0.006	0.007	0.009	0.010	0.011
–	–	–	–	–	–
–	–	–	–	–	–
–	–	–	–	–	–
0.003 ❖	0.005	0.007	0.008	0.011	0.015
0.002 ❖	0.004	0.006	0.007	0.009	0.011
0.007	0.012	0.016	0.020	0.024	0.027
0.006	0.011	0.014	0.018	0.022	0.025
0.006	0.009	0.012	0.016	0.018	0.021
0.005	0.007	0.009	0.012	0.014	0.017
0.004	0.006	0.007	0.009	0.012	0.014
0.007	0.011	0.014	0.017	0.018	0.019
0.007	0.011	0.014	0.016	0.017	0.019
0.007	0.011	0.014	0.017	0.018	0.019
0.007	0.011	0.014	0.016	0.017	0.019
0.005	0.009	0.012	0.016	0.020	0.024
0.004	0.006	0.008	0.010	0.012	0.015
0.006	0.010	0.014	0.017	0.021	0.025
0.002 ❖	0.003	0.006	0.008	0.010	0.014

Deep Hole Drilling Speed and Feed Adjustment

	⚠ Holder Length				
	Extended	Long	Long Plus	XL	3XL
Speed	0.90	0.85	0.80	0.80	0.75
Feed	–	0.95	0.90	0.90	0.90

Recommended Speed and Feed Example

If the recommended speed and feed is 200 SFM and 0.008 IPR for a standard length holder, then the speed and feed using a 3XL holder in the same application would be 150 SFM and 0.007 IPR.

200 • 0.75 = 150 SFM	0.008 • 0.90 = 0.007 IPR

Formulas

1. **RPM = (3.82 • SFM) / DIA**

   where:
   RPM = revolutions per minute (rev/min)
   SFM = speed (ft/min)
   DIA = diameter of drill (inch)

2. **IPM = RPM • IPR**

   where:
   IPM = inches per minute (in/min)
   RPM = revolutions per minute (rev/min)
   IPR = feed rate (in/rev)

3. **SFM = RPM • 0.262 • DIA**

   where:
   SFM = speed (ft/min)
   RPM = revolutions per minute (rev/min)
   DIA = diameter of drill (inch)

⚠ WARNING **Tool failure can cause serious injury. To prevent:**

- When using holders without support bushing, use a short T-A® holder to establish an initial hole that is a minimum of 2 diameters deep.
- Do not rotate tool holder more than 50 RPM unless it is engaged with the workpiece or fixture.

Visit **www.alliedmachine.com/DeepHoleGuidelines** for the most up-to-date information and procedures. Factory technical assistance is available for your specific applications through our Application Engineering Team.

T-A® Recommended Drilling Data | Imperial (inch)

Carbide Inserts | Flat Bottom Geometry

ISO	Material	Hardness (BHN)	Carbide Grade	SFM				Feed Rate (IPR) by Diameter			
				TiN	TiAlN	TiCN	AM200®	3/8" - 1/2"	33/64" - 11/16"	45/64" - 15/16"	31/32" - 1-7/8"
P	**Free-Machining Steel**	100 - 150	C2	270	380	325	425	0.007	0.010	0.013	0.015
	1118, 1215, 12L14, etc.	150 - 200	C2	240	320	280	375	0.006	0.009	0.012	0.014
		200 - 250	C2	220	300	260	350	0.005	0.009	0.011	0.013
	Low-Carbon Steel	85 - 125	C2	260	345	315	410	0.007 ❖	0.009	0.011	0.014
	1010, 1020, 1025, 1522,	125 - 175	C2	220	300	260	350	0.006 ❖	0.009	0.011	0.014
	1144, etc.	175 - 225	C2	200	280	235	320	0.005 ❖	0.008	0.010	0.013
		225 - 275	C2	180	240	215	285	0.004 ❖	0.008	0.010	0.013
	Medium-Carbon Steel	125 - 175	C2	220	300	260	350	0.006	0.009	0.011	0.014
	1030, 1040, 1050, 1527,	175 - 225	C2	200	280	240	320	0.005	0.008	0.010	0.013
	1140, 1151, etc.	225 - 275	C2	180	240	210	285	0.005	0.008	0.010	0.013
		275 - 325	C2	150	210	180	240	0.004	0.007	0.009	0.012
	Alloy Steel	125 - 175	C2	215	290	250	340	0.006	0.009	0.011	0.014
	4140, 5140, 8640, etc.	175 - 225	C2	200	270	230	320	0.005	0.008	0.010	0.013
		225 - 275	C2	180	230	205	290	0.005	0.008	0.010	0.013
		275 - 325	C2	175	215	190	280	0.004	0.007	0.009	0.012
		325 - 375	C2	145	190	170	230	0.003	0.006	0.009	0.011
	High-Strength Alloy	225 - 300	C2	140	170	160	220	0.005 ❖	0.008	0.009	0.010
	4340, 4330V, 300M, etc.	300 - 350	C2	120	160	140	190	0.004 ❖	0.007	0.008	0.009
		350 - 400	C2	100	145	120	160	0.003 ❖	0.006	0.007	0.009
	Structural Steel	100 - 150	C2	205	265	240	325	0.007 ❖	0.009	0.012	0.014
	A36, A285, A516, etc.	150 - 250	C2	170	215	200	270	0.005 ❖	0.009	0.010	0.012
		250 - 350	C2	155	200	180	240	0.004 ❖	0.008	0.009	0.010
	Tool Steel	150 - 200	C2	140	190	160	220	0.003	0.006	0.008	0.009
	H-13, H-21, A-4, 0-2, S-3, etc.	200 - 250	C2	100	150	120	160	0.003	0.006	0.008	0.009
S	**High-Temp Alloy**	140 - 220	C2	70	90	80	110	0.003 ❖	0.006	0.008	0.009
	Hastelloy B, Inconel 600, etc.	220 - 310	C2	50	70	60	80	0.003 ❖	0.005	0.007	0.009
	Titanium Alloy	140 - 220	C2	85	110	90	130	0.003 ❖	0.005	0.006	0.008
		220 - 310	C2	70	95	80	100	0.003 ❖	0.004	0.005	0.007
	Aerospace Alloy	185 - 275	C2	140	120	165	130	0.006 ❖	0.006	0.010	0.012
	S82	275 - 350	C2	110	90	125	105	0.005 ❖	0.005	0.009	0.010
M	**Stainless Steel 400 Series**	185 - 275	C2	140	180	165	210	0.006 ❖	0.008	0.010	0.012
	416, 420, etc.	275 - 350	C2	110	140	125	160	0.005 ❖	0.007	0.009	0.010
	Stainless Steel 300 Series	135 - 185	C2	90	120	110	130	0.005 ❖	0.007	0.008	0.010
	304, 316, 17-4PH, etc.	185 - 275	C2	70	90	80	105	0.004 ❖	0.006	0.007	0.009
	Super Duplex Stainless Steel	135 - 185	C2	70	95	85	110	0.004 ❖	0.006	0.007	0.008
		185 - 275	C2	55	70	60	85	0.003 ❖	0.005	0.006	0.007

❖ Contact our Application Engineering department for assistance when machining these materials.

IMPORTANT: The speeds and feeds listed above are a general starting point for all applications. Refer to the Coolant Recommendation charts for coolant requirements to run at the recommended speeds and feeds. Factory technical assistance is available through our Application Engineering department. See adjustment examples on the following page.

ISO	Material	Hardness (BHN)	Carbide Grade	SFM				Feed Rate (IPR) by Diameter			
				TiN	TiAlN	TiCN	AM200®	3/8" - 1/2"	33/64" - 11/16"	45/64" - 15/16"	31/32" - 1-7/8"
H	**Wear Plate** Hardox®, AR400, T-1, etc.	400	C2	65	100	85	130	0.003 ❖	0.004	0.006	0.008
		500	C2	45	75	60	100	0.002 ❖	0.003	0.005	0.006
		600	C2	35	65	45	80	0.001 ❖	0.002	0.004	0.005
	Hardened Steel	300 - 400	C2	100	125	110	135	0.004 ❖	0.006	0.007	0.009
		400 - 500	C2	60	75	65	110	0.003 ❖	0.005	0.006	0.007
K	**Nodular, Grey, Ductile Cast Iron**	120 - 150	C2	270	405	360	450	0.007	0.010	0.013	0.016
		150 - 200	C2	230	350	290	390	0.006	0.009	0.011	0.014
		200 - 220	C2	200	320	260	350	0.005	0.008	0.010	0.013
		220 - 260	C2	180	270	220	300	0.004	0.007	0.009	0.011
		260 - 320	C2	160	240	200	265	0.004	0.006	0.009	0.009
N	**Cast Aluminum**	30	C2	520	750	650	–	0.009	0.013	0.016	0.017
		180	C2	260	400	350	–	0.008	0.012	0.014	0.015
	Wrought Aluminum	30	C2	950	1200	1070	1270	0.005	0.007	0.009	0.010
		180	C2	630	800	715	850	0.004	0.006	0.008	0.009
	Aluminum Bronze	100 - 200	C2	240	310	280	340	0.004	0.006	0.008	0.011
		200 - 250	C2	180	265	220	285	0.003	0.005	0.006	0.008
	Brass	100	C2	370	520	450	600	0.005	0.006	0.008	0.012
	Copper	60	C2	220	345	280	380	0.002 ❖	0.002	0.003	0.005

❖ Contact our Application Engineering department for assistance when machining these materials.

Deep Hole Drilling Speed and Feed Adjustment

	⚠ Holder Length				
	Extended	Long	Long Plus	XL	3XL
Speed	0.90	0.85	0.80	0.80	0.75
Feed	–	0.95	0.90	0.90	0.90

Recommended Speed and Feed Example

If the recommended speed and feed is 200 SFM and 0.008 IPR for a standard length holder, then the speed and feed using a 3XL holder in the same application would be 150 SFM and 0.007 IPR.

200 • 0.75 = 150 SFM	0.008 • 0.90 = 0.007 IPR

Formulas

1. **RPM = (3.82 • SFM) / DIA**

where:

RPM = revolutions per minute (rev/min)
SFM = speed (ft/min)
DIA = diameter of drill (inch)

2. **IPM = RPM • IPR**

where:

IPM = inches per minute (in/min)
RPM = revolutions per minute (rev/min)
IPR = feed rate (in/rev)

3. **SFM = RPM • 0.262 • DIA**

where:

SFM = speed (ft/min)
RPM = revolutions per minute (rev/min)
DIA = diameter of drill (inch)

⚠ WARNING **Tool failure can cause serious injury. To prevent:**

- When using holders without support bushing, use a short T-A® holder to establish an initial hole that is a minimum of 2 diameters deep.
- Do not rotate tool holder more than 50 RPM unless it is engaged with the workpiece or fixture.

Visit **www.alliedmachine.com/DeepHoleGuidelines** for the most up-to-date information and procedures. Factory technical assistance is available for your specific applications through our Application Engineering Team.

T-A® Recommended Drilling Data | Imperial (inch)

Carbide Inserts | Diamond Coating

	Material	Carbide Grade	SFM Diamond Coating	Feed Rate (IPR) by Diameter 3/8" - 1/2"	33/64" - 11/16"	45/64" - 15/16"	31/32" - 1-3/8"
Polymer Matrix Composites	Carbon (hard)	N2	1000 - 1500	0.004 - 0.006	0.008 - 0.010	0.010 - 0.012	0.012 - 0.014
	Carbon Fiber	N2	1000 - 1500	0.004 - 0.006	0.008 - 0.010	0.010 - 0.012	0.012 - 0.014
	Carbon / Glass Fiber	N2	1000 - 1500	0.004 - 0.006	0.008 - 0.010	0.010 - 0.012	0.012 - 0.014
	Fiberglass	N2	1000 - 1500	0.004 - 0.006	0.008 - 0.010	0.010 - 0.012	0.012 - 0.014
	Graphite	N2	1000 - 1500	0.004 - 0.006	0.008 - 0.010	0.010 - 0.012	0.012 - 0.014
	Plastics	N2	250 - 1000	0.004 - 0.006	0.008 - 0.010	0.010 - 0.012	0.012 - 0.014
	Epoxy Resin	N2	250 - 1000	0.004 - 0.006	0.008 - 0.010	0.010 - 0.012	0.012 - 0.014
	Bismaleimide Resin	N2	250 - 1000	0.004 - 0.006	0.008 - 0.010	0.010 - 0.012	0.012 - 0.014
	Polyester Resin	N2	250 - 1000	0.004 - 0.006	0.008 - 0.010	0.010 - 0.012	0.012 - 0.014
	Phenolic Resin	N2	250 - 1000	0.004 - 0.006	0.008 - 0.010	0.010 - 0.012	0.012 - 0.014
	Rubber	N2	250 - 1000	0.004 - 0.006	0.008 - 0.010	0.010 - 0.012	0.012 - 0.014
Metal Matrix Composites	Aluminum	N2	1000	0.008	0.013	0.016	0.020
	Si < 10%	N2	1000	0.008	0.013	0.016	0.020
	10% < Si < 15%	N2	850 - 1000	0.008	0.013	0.016	0.020
	15% < SI < 20%	N2	650 - 850	0.008	0.013	0.016	0.020
	20% < Si < 25%	N2	500 - 650	0.008	0.013	0.016	0.020
	25% < Si	N2	200 - 500	0.008	0.013	0.016	0.020
	Brass	N2	250 - 500	0.008	0.013	0.016	0.020
	Bronze	N2	250 - 500	0.008	0.013	0.016	0.020
	Copper	N2	100 - 250	0.004 - 0.006	0.008 - 0.010	0.010 - 0.012	0.012 - 0.014
	Copper Alloys	N2	100 - 250	0.004 - 0.006	0.008 - 0.010	0.010 - 0.012	0.012 - 0.014
	Lead Alloys	N2	100 - 250	0.004 - 0.006	0.008 - 0.010	0.010 - 0.012	0.012 - 0.014
	Magnesium Alloys	N2	100 - 250	0.004 - 0.006	0.008 - 0.010	0.010 - 0.012	0.012 - 0.014
	Precious Metals	N2	100 - 250	0.004 - 0.006	0.008 - 0.010	0.010 - 0.012	0.012 - 0.014
Ceramic Matrix Composites	Carbide (green)	N2	50 - 250	0.004 - 0.006	0.008 - 0.010	0.010 - 0.012	0.012 - 0.014
	Ceramic (green)	N2	50 - 250	0.004 - 0.006	0.008 - 0.010	0.010 - 0.012	0.012 - 0.014
	Ceramic (pre-sintered)	N2	50 - 250	0.004 - 0.006	0.008 - 0.010	0.010 - 0.012	0.012 - 0.014

Deep Hole Drilling Speed and Feed Adjustment

	⚠ Holder Length				
	Extended	Long	Long Plus	XL	3XL
Speed	0.90	0.85	0.80	0.80	0.75
Feed	–	0.95	0.90	0.90	0.90

Recommended Speed and Feed Example

If the recommended speed and feed is 200 SFM and 0.008 IPR for a standard length holder, then the speed and feed using a 3XL holder in the same application would be 150 SFM and 0.007 IPR.

200 • 0.75 = 150 SFM	0.008 • 0.90 = 0.007 IPR

⚠ WARNING **Tool failure can cause serious injury. To prevent:**

- When using holders without support bushing, use a short T-A® holder to establish an initial hole that is a minimum of 2 diameters deep.
- Do not rotate tool holder more than 50 RPM unless it is engaged with the workpiece or fixture.

Visit **www.alliedmachine.com/DeepHoleGuidelines** for the most up-to-date information and procedures. Factory technical assistance is available for your specific applications through our Application Engineering Team.

IMPORTANT: The speeds and feeds listed above are a general starting point for all applications. Refer to the Coolant Recommendation charts for coolant requirements to run at the recommended speeds and feeds. Factory technical assistance is available through our Application Engineering department. See adjustment examples on the following page.

Tap Drill Information and Formulas | Imperial (inch)

American - Unified Inch Screw Thread

Tap Size	Tap Drill Size	Decimal Equivalent	* Theo % Thread	Probable Mean Oversize	Probable Hole Size	** Probable % Thread
7/16 - 20	W	0.3860	79%	0.003"	0.3890"	75%
7/16 - 20	25/64"	0.3906	72%	0.003"	0.3936"	68%
1/2 - 13	10.5 mm	0.4134	87%	0.003"	0.4164"	84%
1/2 - 13	27/64"	0.4219	78%	0.003"	0.4249"	75%
1/2 - 13	7/16"	0.4375	63%	0.003"	0.4405"	60%
1/2 - 20	29/64"	0.4531	72%	0.003"	0.4561"	68%
9/16 - 12	15/32"	0.4688	87%	0.003"	0.4718"	84%
9/16 - 12	12.0 mm	0.4724	72%	0.003"	0.4874"	69%
9/16 - 12	31/64"	0.4844	83%	0.003"	0.4754"	80%
9/16 - 18	1/2"	0.5000"	87%	0.003"	0.5030"	82%
9/16 - 18	13.0 mm	0.5118"	70%	0.003"	0.5148"	66%
9/16 - 18	31/64"	0.5156"	65%	0.003"	0.5186"	61%
5/8 - 11	17/32"	0.5313"	79%	0.003"	0.5343"	77%
5/8 - 12	35/64"	0.5469"	72%	0.003"	0.5499"	69%
5/8 - 18	9/16"	0.5625"	87%	0.003"	0.5655"	82%
5/8 - 18	14.5 mm	0.5709"	75%	0.003"	0.5739"	75%
5/8 - 18	37/64"	0.5781"	65%	0.003"	0.5811"	70%
11/16 - 12	39/64"	0.6094"	72%	0.003"	0.6124"	69%
3/4 - 10	41/64"	0.6406"	84%	0.003"	0.6436"	82%
3/4 - 10	16.5 mm	0.6496"	77%	0.003"	0.6526"	75%
3/4 - 10	21/32"	0.6563"	72%	0.003"	0.6593"	70%
3/4 - 12	43/64"	0.6719"	72%	0.003"	0.6749"	69%
3/4 - 16	11/16"	0.6875"	77%	0.003"	0.6905"	73%
3/4 - 16	17.5 mm	0.6890"	75%	0.003"	0.6920"	71%
7/8 - 9	49/64"	0.7656"	76%	0.003"	0.7686"	74%
7/8 - 9	25/32"	0.7813"	65%	0.003"	0.7843"	63%
7/8 - 14	51/64"	0.7969"	84%	0.003"	0.7999"	81%
7/8 - 14	13/16"	0.8125"	67%	0.003"	0.8155"	64%
15/16 - 12	55/64"	0.8594"	72%	0.003"	0.8624"	69%
15/16 - 20	57/64"	0.8906"	72%	0.003"	0.8936"	68%
1 - 8	22.0 mm	0.8661"	82%	0.003"	0.8691"	81%
1 - 8	7/8"	0.8750"	77%	0.003"	0.8780"	75%
1 - 8	57/64"	0.8906"	67%	0.003"	0.8936"	65%
1 - 12	29/32"	0.9063"	87%	0.003"	0.9093"	84%
1 - 12	59/64"	0.9219"	72%	0.003"	0.9249"	69%
1 - 14	15/16"	0.9375"	67%	0.003"	0.9405"	64%
1-1/8 - 12	1-1/32"	1.0313"	87%	0.003"	1.0343"	84%
1-1/8 - 12	1-3/64"	1.0469"	72%	0.003"	1.0499"	69%
1-1/4 - 7	1-7/64"	1.1094"	76%	0.003"	1.1124"	74%
24 x 2	7/8"	0.8750"	68%	0.003"	0.8780"	65%
27 x 3	24.0 mm	0.9449"	77%	0.003"	0.9403"	75%

Taper Pipe Thread (NPT)

Tap Size	Tap Drill Size	Decimal Equivalent	Theo % Thread*	Probable Mean Oversize	Probable Hole Size	Probable % Thread**
1/4 - 18	7/16	0.4375	–	0.003	0.4405	–
3/8 - 18	9/16	0.5625	–	0.003	0.5655	–
1/2 - 14	45/64	0.7031	–	0.003	0.7061	–
3/4 - 14	29/32	0.9063	–	0.003	0.9093	–

* Based on nominal tap drill diameter.
** Based on 0.003" probable mean oversize.

To calculate the percent of full thread for a given hole diameter:

$$\text{\% Thread} = \text{\# of Thread per Inch} \left[\frac{\text{Basic Major Diameter of Thread} - \text{Drill Hole Size}}{0.0130} \right]$$

Formulas

1. **RPM = (3.82 • SFM) / DIA**
   where:
   RPM = revolutions per minute (rev/min)
   SFM = speed (ft/min)
   DIA = diameter of drill (inch)

2. **IPM = RPM • IPR**
   where:
   IPM = inches per minute (in/min)
   RPM = revolutions per minute (rev/min)
   IPR = feed rate (in/rev)

3. **SFM = RPM • 0.262 • DIA**
   where:
   SFM = speed (ft/min)
   RPM = revolutions per minute (rev/min)
   DIA = diameter of drill (inch)

4. **Thrust = 153,700 • IPR • DIA • K_m**
   where:
   Thrust = axial thrust (lbs)
   IPR = feed rate (in/rev)
   DIA = diameter of drill (inch)
   K_m = specific cutting energy (lbs/in²)

5. **Tool Power = .6283 • IPR • RPM • K_m • DIA²**
   where:
   Tool Power = tool power (HP)
   IPR = feed rate (in/rev)
   RPM = revolutions per minute (rev/min)
   K_m = specific cutting energy (lbs/in²)
   DIA = diameter of drill (inch)

Material Constants

Type of Material	Hardness	K_m (lbs/in²)
Plain Carbon and Alloy Steel	85 - 200 BHN	0.79
	200 - 275 BHN	0.94
	275 - 375 BHN	1.00
	375 - 425 BHN	1.15
High-Temperature Alloys	–	1.44
Stainless Steels	135 - 275 BHN	0.94
	30 - 45 RC	1.08
Cast Iron	100 - 200 BHN	0.50
	200 - 300 BHN	1.08
Copper Alloy	20 - 80 RB	0.43
	80 - 100 RB	0.72
Titanium Alloy	–	0.72
Aluminum Alloy	–	0.22
Magnesium Alloy	–	0.16

Notes

- The above tap drill information represents probable thread percentages for the standard tap drills stocked at Allied Machine. Special insert diameters may be required in order to meet a user specific percentage of thread requirements.
- The 0.003" probable mean oversize hole condition is based on optimum cutting conditions. Probable percent of full thread may vary based on less ideal cutting conditions.
- The table and equations on this page are found in the *Machinery's Handbook*. Permission to simplify and print the equations is granted by the editor of the *Machinery's Handbook*.

Coolant Recommendations | Imperial (inch)

HSS Drill Inserts

ISO	Material	Pressure or Flow Rate	3/8" - 1/2"	33/64" - 11/16"	23/32" - 1"	1" - 1-1/4"	1-1/4" - 2"	2" - 3"	3" - 4"
P	**Free-Machining Steel**	PSI	175 - 185	100 - 120	105 - 140	80 - 115	75 - 100	40 - 50	65 - 90
	1118, 1215, 12L14, etc.	GPM	2.5 - 2.6	2.8 - 3.0	4.4 - 5.2	7 - 8	12 - 14	30 - 33	38 - 44
	Low-Carbon Steel	PSI	165 - 170	75 - 90	75 - 95	60 - 80	55 - 75	30 - 40	50 - 65
	1010, 1020, 1025, 1522, 1144, etc.	GPM	2.4 - 2.5	2.4 - 2.6	3.7 - 4.2	6 - 7	11 - 12	26 - 30	33 - 38
	Medium-Carbon Steel	PSI	160 - 165	70 - 85	70 - 90	55 - 75	50 - 70	30 - 40	50 - 65
	1030, 1040, 1050, 1527, 1140, 1151, etc.	GPM	2.3 - 2.4	2.3 - 2.6	3.7 - 4.2	5 - 6	10 - 12	26 - 30	33 - 38
	Alloy Steel	PSI	160 - 165	65 - 75	65 - 80	50 - 70	45 - 60	30 - 35	40 - 50
	4140, 5140, 8640, etc.	GPM	2.3 - 2.4	2.2 - 2.4	3.5 - 3.9	5 - 6	10 - 11	26 - 28	30 - 33
	High-Strength Alloy	PSI	150 - 155	55 - 60	45 - 50	25 - 30	25 - 30	20 - 25	40 - 50
	4340, 4330V, 300M, etc.	GPM	2.3 - 2.4	2.1 - 2.2	2.9 - 3.1	4 - 5	7 - 8	21 - 23	23 - 26
	Structural Steel	PSI	160 - 165	75 - 85	65 - 80	40 - 55	40 - 50	25 - 30	40 - 50
	A36, A285, A516, etc.	GPM	2.3 - 2.4	2.4 - 2.6	3.5 - 3.9	5 - 6	9 - 10	23 - 26	30 - 33
	Tool Steel	PSI	150 - 155	55 - 60	45 - 50	25 - 30	25 - 30	20 - 25	25 - 30
	H-13, H-21, A-4, 0-2, S-3, etc.	GPM	2.3 - 2.4	2.1 - 2.2	2.9 - 3.1	4 - 5	7 - 8	21 - 23	23 - 26
S	**High-Temp Alloy**	PSI	150 - 155	60 - 65	50 - 55	30 - 35	25 - 30	25 - 30	44
	Hastelloy B, Inconel 600, etc.	GPM	2.3 - 2.4	2.2 - 2.3	3.1 - 3.2	4 - 5	7 - 8	23 - 26	33
	Titanium Alloy	PSI	150 - 155	60 - 65	50 - 55	30 - 35	25 - 30	25 - 30	44
		GPM	2.3 - 2.4	2.2 - 2.3	3.1 - 3.2	4 - 5	7 - 8	23 - 26	33
	Aerospace Alloy	PSI	150 - 155	60 - 65	50 - 55	30 - 35	25 - 30	25 - 30	44
	S82	GPM	2.3 - 2.4	2.2 - 2.3	3.1 - 3.2	4 - 5	7 - 8	23 - 26	33
M	**Stainless Steel 400 Series**	PSI	171	86	75	55	51	29	45
	416, 420, etc.	GPM	3	3	4	6	10	26	31
	Stainless Steel 300 Series	PSI	171	86	75	55	51	29	45
	304, 316, 17-4PH, etc.	GPM	3	3	4	6	10	26	31
	Super Duplex Stainless Steel	PSI	171	86	75	55	51	29	45
		GPM	3	3	4	6	10	26	31
H	**Wear Plate**	PSI	155	61	51	29	29	25	29
	Hardox®, AR400, T-1, etc.	GPM	2	2	3	5	8	23	26
	Hardened Steel	PSI	155	61	51	29	29	25	29
		GPM	2	2	3	5	8	23	26
K	**SG / Nodular Cast Iron**	PSI	160	65	61	41	35	29	35
		GPM	2	2	3	5	9	26	28
	Grey / White Iron	PSI	160	65	61	41	35	29	35
		GPM	2	2	3	5	9	26	28
N	**Cast Aluminum**	PSI	210	180	230	159	125	51	80
		GPM	3	4	6	9	16	33	42
	Wrought Aluminum	PSI	210	180	230	159	125	51	80
		GPM	3	4	6	9	16	33	42
	Aluminum Bronze	PSI	186	120	140	115	100	51	90
		GPM	2.5	3	5	8	14	33	44
	Brass	PSI	159	65	61	41	35	29	35
		GPM	2	2	3	5	9	26	28
	Copper	PSI	186	120	140	115	100	51	90
		GPM	2.5	3	5	8	14	33	44

Deep Hole Drilling Coolant Adjustment

	⚠ Holder Length				
	Extended	**Long**	**Long Plus**	**XL**	**3XL**
Pressure and Flow	1.3	1.5	2	2	3

Recommended Coolant Example

If the recommended pressure and flow is 150 PSI and 2.4 GPM for a standard length holder, then the adjusted pressure and flow for a 3XL holder would be 450 PSI and 7.2 GPM.

150 • 3 = 450 PSI	2.4 • 3 = 7.2 GPM

⚠ WARNING **Tool failure can cause serious injury. To prevent:**

- When using holders without support bushing, use a short T-A® holder to establish an initial hole that is a minimum of 2 diameters deep.
- Do not rotate tool holder more than 50 RPM unless it is engaged with the workpiece or fixture.

Visit **www.alliedmachine.com/DeepHoleGuidelines** for the most up-to-date information and procedures. Factory technical assistance is available for your specific applications through our Application Engineering Team.

IMPORTANT: The coolant pressure and flow rate recommendations above represent a good approximation to obtain optimum tool life and chip evacuation at Allied Machine recommended speeds and feeds. If lower coolant capabilities exist in a drilling application, the T-A® drilling system will still function at reduced penetration rates. Contact our Application Engineering department for a more specific recommendation of coolant requirements and/or speeds and feeds.

Coolant Recommendations | Imperial (inch)

Carbide Drill Inserts

ISO	Material	Pressure or Flow Rate	3/8" - 1/2"	33/64" - 11/16"	23/32" - 1"	1" - 1-3/8"	1-13/32" - 1-7/8"
P	**Free-Machining Steel**	PSI	195	140	160	140	155
	1118, 1215, 12L14, etc.	GPM	2.6	3.3	5.5	9	18
	Low-Carbon Steel	PSI	180	105	105	110	115
	1010, 1020, 1025, 1522, 1144, etc.	GPM	2.5	2.9	4.4	8	15
	Medium-Carbon Steel	PSI	175	100	90	70	75
	1030, 1040, 1050, 1527, 1140, 1151, etc.	GPM	2.5	2.8	4.1	7	13
	Alloy Steel	PSI	165	85	100	75	70
	4140, 5140, 8640, etc.	GPM	2.4	2.6	4.3	6	12
	High-Strength Alloy	PSI	175	115	105	75	70
	4340, 4330V, 300M, etc.	GPM	2.4	2.3	3.2	5	8
	Structural Steel	PSI	175	115	105	75	70
	A36, A285, A516, etc.	GPM	2.5	3.0	4.4	6	12
	Tool Steel	PSI	155	60	55	40	35
	H-13, H-21, A-4, 0-2, S-3, etc.	GPM	2.4	2.2	3.2	5	8
S	**High-Temp Alloy**	PSI	247	160	174	160	130
	Hastelloy B, Inconel 600, etc.	GPM	3	4	6	9	16
	Titanium Alloy	PSI	247	160	174	160	130
		GPM	3	4	6	9	16
	Aerospace Alloy	PSI	247	160	174	160	130
	S82	GPM	3	4	6	9	16
M	**Stainless Steel 400 Series**	PSI	329	239	260	250	190
	416, 420, etc.	GPM	3	4	7	12	20
	Stainless Steel 300 Series	PSI	329	239	260	250	190
	304, 316, 17-4PH, etc.	GPM	3	4	7	12	20
	Super Duplex Stainless Steel	PSI	329	239	260	250	190
		GPM	3	4	7	12	20
H	**Wear Plate**	PSI	210	75	70	49	45
	Hardox®, AR400, T-1, etc.	GPM	3	2	4	5	10
	Hardened Steel	PSI	210	75	70	49	45
		GPM	3	2	4	5	10
K	**SG / Nodular Cast Iron**	PSI	225	104	90	90	80
		GPM	3	3	4	7	13
	Grey / White Iron	PSI	225	104	90	90	80
		GPM	3	3	4	7	13
N	**Cast Aluminum**	PSI	350	319	315	284	200
		GPM	4	5	8	12	20
	Wrought Aluminum	PSI	350	319	315	284	200
		GPM	4	5	8	12	20
	Aluminum Bronze	PSI	290	239	239	220	174
		GPM	3	4	7	11	19
	Brass	PSI	350	319	315	284	200
		GPM	4	5	7	12	20
	Copper	PSI	290	239	239	220	174
		GPM	3	4	7	11	19

Deep Hole Drilling Coolant Adjustment

	⚠ Holder Length				
	Extended	Long	Long Plus	XL	3XL
Pressure and Flow	1.3	1.5	2	2	3

Recommended Coolant Example

If the recommended pressure and flow is 150 PSI and 2.4 GPM for a standard length holder, then the adjusted pressure and flow for a 3XL holder would be 450 PSI and 7.2 GPM.

150 • 3 = 450 PSI	2.4 • 3 = 7.2 GPM

⚠ WARNING **Tool failure can cause serious injury. To prevent:**

- When using holders without support bushing, use a short T-A® holder to establish an initial hole that is a minimum of 2 diameters deep.
- Do not rotate tool holder more than 50 RPM unless it is engaged with the workpiece or fixture.

Visit **www.alliedmachine.com/DeepHoleGuidelines** for the most up-to-date information and procedures. Factory technical assistance is available for your specific applications through our Application Engineering Team.

IMPORTANT: The coolant pressure and flow rate recommendations above represent a good approximation to obtain optimum tool life and chip evacuation at Allied Machine recommended speeds and feeds. If lower coolant capabilities exist in a drilling application, the T-A® drilling system will still function at reduced penetration rates. Contact our Application Engineering department for a more specific recommendation of coolant requirements and/or speeds and feeds.

GEN2 T-A® Recommended Drilling Data | Metric (mm)

HSS Inserts

ISO	Material	Hardness (BHN)	HSS Grade	m/min TiN	m/min AM200®	Feed Rate (mm/rev) by Diameter 9.50 mm - 12.95 mm	Feed Rate (mm/rev) by Diameter 12.98 mm - 17.52 mm
P	**Free-Machining Steel**	100 - 150	HSS	61	99	0.20	0.30
	1118, 1215, 12L14, etc.	150 - 200	HSS	55	91	0.18	0.28
		200 - 250	HSS	49	85	0.15	0.25
	Low-Carbon Steel	85 - 125	HSS	52	88	0.20 ❖	0.25
	1010, 1020, 1025, 1522, 1144, etc.	125 - 175	HSS	49	83	0.18 ❖	0.25
		175 - 225	HSS	46	79	0.15 ❖	0.23
		225 - 275	HSS	43	73	0.13 ❖	0.23
	Medium-Carbon Steel	125 - 175	HSS	49	83	0.18	0.25
	1030, 1040, 1050, 1527, 1140, 1151, etc.	175 - 225	HSS	46	79	0.15	0.23
		225 - 275	HSS	43	73	0.15	0.23
		275 - 325	SC, PC	40	68	0.13	0.20
	Alloy Steel	125 - 175	HSS	46	73	0.18	0.25
	4140, 5140, 8640, etc.	175 - 225	HSS	43	68	0.15	0.23
		225 - 275	HSS	40	64	0.15	0.23
		275 - 325	SC, PC	37	59	0.13	0.20
		325 - 375	SC, PC	34	54	0.10	0.18
	High-Strength Alloy	225 - 300	SC, PC	24	38	0.15 ❖	0.23
	4340, 4330V, 300M, etc.	300 - 350	SC, PC	18	30	0.13 ❖	0.20
		350 - 400	PC	15	24	0.10 ❖	0.18
	Structural Steel	100 - 150	HSS	43	71	0.20 ❖	0.28
	A36, A285, A516, etc.	150 - 250	HSS	37	57	0.15 ❖	0.25
		250 - 350	SC, PC	30	48	0.13 ❖	0.23
	Tool Steel	150 - 200	SC	24	38	0.10	0.18
	H-13, H-21, A-4, 0-2, S-3, etc.	200 - 250	SC, PC	18	32	0.10	0.18
S	**High-Temp Alloy**	140 - 220	SC, PC	9	13	0.10 ❖	0.18
	Hastelloy B, Inconel 600, etc.	220 - 310	PC	8	12	0.10 ❖	0.15
	Titanium Alloy	140 - 220	SC, PC	11	16	0.10 ❖	0.18
		220 - 310	PC	10	15	0.08 ❖	0.15
	Aerospace Alloy	185 - 275	SC, PC	23	35	0.15 ❖	0.20
	S82	275 - 350	SC, PC	18	31	0.13 ❖	0.18
M	**Stainless Steel 400 Series**	185 - 275	SC, PC	23	35	0.15 ❖	0.20
	416, 420, etc.	275 - 350	SC, PC	18	31	0.13 ❖	0.18
	Stainless Steel 300 Series	135 - 185	SC, PC	23	35	0.08 ❖	0.18
	304, 316, 17-4PH, etc.	185 - 275	SC, PC	18	31	0.08 ❖	0.15
	Super Duplex Stainless Steel	135 - 185	SC, PC	18	26	0.08 ❖	0.18
		185 - 275	SC, PC	15	22	0.08 ❖	0.15
H	**Wear Plate**	400	SC, PC	14	21	0.08 ❖	0.15
	Hardox®, AR400, T-1, etc.	500	PC	10	14	0.05 ❖	0.12
		600	N/A	–	–	–	–
	Hardened Steel	300 - 400	PC	15	29	0.10 ❖	0.15
		400 - 500	PC	10	14	0.06 ❖	0.12
K	**Nodular, Grey, Ductile Cast Iron**	120 - 150	HSS	52	84	0.20	0.30
		150 - 200	HSS	46	79	0.18	0.28
		200 - 220	HSS	40	68	0.15	0.23
		220 - 260	SC, PC	34	57	0.13	0.20
		260 - 320	SC, PC	27	47	0.13	0.18
N	**Cast Aluminum**	30	HSS	183	–	0.23	0.38
		180	HSS	91	–	0.20	0.33
	Wrought Aluminum	30	HSS	183	280	0.12	0.33
		180	HSS	91	200	0.12	0.18
	Aluminum Bronze	100 - 200	SC	52	82	0.15	0.24
		200 - 250	SC	40	65	0.12	0.18
	Brass	100	HSS	91	144	0.18	0.27
	Copper	60	SC	40	58	0.07 ❖	0.10

❖ Contact our Application Engineering department for assistance when machining these materials.

IMPORTANT: The speeds and feeds listed above are a general starting point for all applications. Refer to the Coolant Recommendation charts for coolant requirements to run at the recommended speeds and feeds. Factory technical assistance is available through our Application Engineering department. See adjustment examples on the following page.

Feed Rate (mm/rev) by Diameter				
17.53 mm - 24.38 mm	24.41 mm - 35.00 mm	35.01 mm - 47.80 mm	47.85 mm - 65.99 mm	66.00 mm - 114.48 mm
0.41	0.48	0.51	0.58	0.71
0.38	0.43	0.51	0.58	0.71
0.36	0.41	0.51	0.58	0.71
0.36	0.46	0.48	0.58	0.69
0.36	0.43	0.48	0.58	0.69
0.33	0.41	0.46	0.53	0.61
0.33	0.41	0.46	0.53	0.61
0.36	0.43	0.48	0.58	0.69
0.33	0.41	0.46	0.53	0.61
0.33	0.41	0.46	0.53	0.61
0.30	0.38	0.41	0.48	0.56
0.36	0.43	0.43	0.48	0.56
0.33	0.41	0.43	0.48	0.56
0.33	0.41	0.43	0.48	0.56
0.30	0.38	0.38	0.43	0.51
0.28	0.36	0.38	0.43	0.51
0.28	0.33	0.36	0.43	0.51
0.25	0.30	0.36	0.43	0.51
0.23	0.28	0.30	0.41	0.46
0.38	0.43	0.46	0.53	0.66
0.33	0.38	0.41	0.48	0.61
0.30	0.33	0.36	0.43	0.51
0.25	0.30	0.30	0.38	0.43
0.25	0.30	0.30	0.38	0.43
0.23	0.28	0.30	0.38	–
0.20	0.25	0.25	0.30	–
0.21	0.27	0.30	0.38	–
0.18	0.23	0.25	0.30	–
0.23	0.28	0.36	0.41	0.51
0.20	0.25	0.30	0.36	0.46
0.23	0.28	0.36	0.41	0.51
0.20	0.25	0.30	0.36	0.46
0.20	0.28	0.36	0.41	0.51
0.18	0.25	0.30	0.36	0.46
0.20	0.28	0.36	0.41	0.51
0.18	0.25	0.30	0.36	0.46
0.20	0.23	0.30	0.41	0.46
0.18	0.20	0.25	0.30	0.40
–	–	–	–	–
0.23	0.27	0.30	0.41	0.46
0.18	0.24	0.25	0.30	0.40
0.41	0.51	0.61	0.69	0.76
0.38	0.48	0.56	0.64	0.71
0.33	0.43	0.46	0.53	0.61
0.28	0.36	0.36	0.43	0.51
0.25	0.28	0.28	0.36	0.41
0.46	0.58	0.56	0.64	0.64
0.40	0.50	0.56	0.64	0.64
0.40	0.50	0.56	0.64	0.64
0.30	0.35	0.56	0.64	0.64
0.30	0.38	0.43	0.48	0.53
0.23	0.28	0.36	0.40	0.46
0.33	0.45	0.47	0.53	0.58
0.18	0.26	0.23	0.27	0.31

Deep Hole Drilling Speed and Feed Adjustment

	⚠ Holder Length				
	Extended	Long	Long Plus	XL	3XL
Speed	0.90	0.85	0.80	0.80	0.75
Feed	–	0.95	0.90	0.90	0.90

Recommended Speed and Feed Example

If the recommended speed and feed is 50 m/min and 0.20 mm/rev for a standard length holder, then the speed and feed using a 3XL holder in the same application would be 37.5 m/min and 0.18 mm/rev.

50 • 0.75 = 37.5 m/min	0.20 • 0.90 = 0.18 mm/rev

Formulas

1. **RPM = (318.47 • m/min) / DIA**

   where:
   RPM = revolutions per minute (rev/min)
   m/min = speed (m/min)
   DIA = diameter of drill (mm)

2. **mm/min = RPM • mm/rev**

   where:
   mm/min = mm per minute (mm/min)
   RPM = revolutions per minute (rev/min)
   mm/rev = feed rate (mm/rev)

3. **m/min = RPM • 0.003 • DIA**

   where:
   m/min = speed (m/min)
   RPM = revolutions per minute (rev/min)
   DIA = diameter of drill (mm)

⚠ WARNING **Tool failure can cause serious injury. To prevent:**
- When using holders without support bushing, use a short T-A® holder to establish an initial hole that is a minimum of 2 diameters deep.
- Do not rotate tool holder more than 50 RPM unless it is engaged with the workpiece or fixture.

Visit **www.alliedmachine.com/DeepHoleGuidelines** for the most up-to-date information and procedures. Factory technical assistance is available for your specific applications through our Application Engineering Team.

GEN2 T-A® Recommended Drilling Data | Metric (mm)

Carbide Inserts

ISO	Material	Hardness (BHN)	Carbide Grade	m/min AM300®	Feed Rate (mm/rev) by Diameter 9.50 mm - 12.95 mm	12.98 mm - 17.53 mm	17.54 mm - 24.38 mm	24.41 mm - 35.00 mm
P	**Free-Machining Steel** 1118, 1215, 12L14, etc.	100 - 150	C1	146	0.20	0.30	0.41	0.48
		150 - 200	C1	126	0.18	0.28	0.38	0.43
		200 - 250	C1	119	0.15	0.25	0.36	0.41
	Low-Carbon Steel 1010, 1020, 1025, 1522, 1144, etc.	85 - 125	C1	137	0.20 ❖	0.25	0.36	0.46
		125 - 175	C1	119	0.18 ❖	0.25	0.36	0.43
		175 - 225	C1	108	0.15 ❖	0.23	0.33	0.41
		225 - 275	C1	95	0.13 ❖	0.23	0.33	0.41
	Medium-Carbon Steel 1030, 1040, 1050, 1527, 1140, 1151, etc.	125 - 175	C1	119	0.18	0.25	0.36	0.43
		175 - 225	C1	108	0.15	0.23	0.33	0.41
		225 - 275	C1	95	0.15	0.23	0.33	0.41
		275 - 325	C1	80	0.13	0.20	0.30	0.38
	Alloy Steel 4140, 5140, 8640, etc.	125 - 175	C1	115	0.18	0.25	0.36	0.43
		175 - 225	C1	105	0.15	0.23	0.33	0.43
		225 - 275	C1	95	0.15	0.23	0.33	0.41
		275 - 325	C1	87	0.13	0.20	0.30	0.38
		325 - 375	C1	78	0.10	0.18	0.28	0.36
	High-Strength Alloy 4340, 4330V, 300M, etc.	225 - 300	C1	70	0.15 ❖	0.23	0.28	0.33
		300 - 350	C1	63	0.13 ❖	0.20	0.25	0.30
		350 - 400	C1	56	0.10 ❖	0.18	0.23	0.28
	Structural Steel A36, A285, A516, etc.	100 - 150	C1	108	0.20 ❖	0.28	0.38	0.43
		150 - 250	C1	87	0.15 ❖	0.25	0.33	0.38
		250 - 350	C1	80	0.13 ❖	0.23	0.30	0.33
	Tool Steel H-13, H-21, A-4, 0-2, S-3, etc.	150 - 200	C1	78	0.10	0.18	0.25	0.30
		200 - 250	C1	59	0.10	0.18	0.25	0.30
S	**High-Temp Alloy** Hastelloy B, Inconel 600, etc.	140 - 220	C2	37	0.10 ❖	0.18	0.23	0.28
		220 - 310	C2	29	0.10 ❖	0.15	0.20	0.25
	Titanium Alloy	140 - 220	C2	42	0.10 ❖	0.18	0.21	0.27
		220 - 310	C2	33	0.08 ❖	0.15	0.18	0.23
	Aerospace Alloy S82	185 - 275	C2	73	0.12 ❖	0.16	0.18	0.22
		275 - 350	C2	56	0.10 ❖	0.14	0.16	0.19
M	**Stainless Steel 400 Series** 416, 420, etc.	185 - 275	C2	73	0.18 ❖	0.23	0.30	0.36
		275 - 350	C2	56	0.15 ❖	0.20	0.28	0.30
	Stainless Steel 300 Series 304, 316, 17-4PH, etc.	135 - 185	C2	73	0.14 ❖	0.18	0.24	0.29
		185 - 275	C2	56	0.12 ❖	0.16	0.22	0.24
	Super Duplex Stainless Steel	135 - 185	C2	38	0.12 ❖	0.17	0.22	0.26
		185 - 275	C2	30	0.10 ❖	0.15	0.18	0.22

❖ Contact our Application Engineering department for assistance when machining these materials.

IMPORTANT: The speeds and feeds listed above are a general starting point for all applications. Refer to the Coolant Recommendation charts for coolant requirements to run at the recommended speeds and feeds. Factory technical assistance is available through our Application Engineering department. See adjustment examples on the following page.

ISO	Material	Hardness (BHN)	Carbide Grade	m/min AM300®	Feed Rate (mm/rev) by Diameter 9.50 mm - 12.95 mm	12.98 mm - 17.53 mm	17.54 mm - 24.38 mm	24.41 mm - 35.00 mm
H	**Wear Plate** Hardox®, AR400, T-1, etc.	400	C2	45	0.07 ❖	0.12	0.20	0.25
		500	C2	37	0.05 ❖	0.10	0.15	0.20
		600	C2	30	0.04 ❖	0.08	0.12	0.16
	Hardened Steel	300 - 400	C1	47	0.10 ❖	0.18	0.23	0.27
		400 - 500	C1	37	0.06 ❖	0.12	0.18	0.24
K	**Nodular, Grey, Ductile Cast Iron**	120 - 150	C2	152	0.20	0.30	0.38	0.48
		150 - 200	C2	146	0.18	0.28	0.33	0.43
		200 - 220	C2	131	0.15	0.23	0.30	0.38
		220 - 260	C2	113	0.13	0.20	0.28	0.33
		260 - 320	C2	102	0.13	0.18	0.25	0.28
N	**Cast Aluminum**	30	C2	300	0.23	0.38	0.46	0.58
		180	C2	225	0.20	0.33	0.40	0.50
	Wrought Aluminum	30	C2	426	0.12	0.33	0.40	0.50
		180	C2	300	0.12	0.18	0.30	0.35
	Aluminum Bronze	100 - 200	C2	110	0.15	0.24	0.30	0.38
		200 - 250	C2	90	0.12	0.18	0.23	0.28
	Brass	100	C2	200	0.18	0.27	0.33	0.45
	Copper	60	C2	130	0.07 ❖	0.10	0.18	0.26

❖ Contact our Application Engineering department for assistance when machining these materials.

Deep Hole Drilling Speed and Feed Adjustment

	⚠ Holder Length				
	Extended	Long	Long Plus	XL	3XL
Speed	0.90	0.85	0.80	0.80	0.75
Feed	–	0.95	0.90	0.90	0.90

Recommended Speed and Feed Example

If the recommended speed and feed is 50 m/min and 0.20 mm/rev for a standard length holder, then the speed and feed using a 3XL holder in the same application would be 37.5 m/min and 0.18 mm/rev.

50 • 0.75 = 37.5 m/min	0.20 • 0.90 = 0.18 mm/rev

Formulas

1. **RPM = (318.47 • m/min) / DIA**
   where:
   RPM = revolutions per minute (rev/min)
   m/min = speed (m/min)
   DIA = diameter of drill (mm)

2. **mm/min = RPM • mm/rev**
   where:
   mm/min = mm per minute (mm/min)
   RPM = revolutions per minute (rev/min)
   mm/rev = feed rate (mm/rev)

3. **m/min = RPM • 0.003 • DIA**
   where:
   m/min = speed (m/min)
   RPM = revolutions per minute (rev/min)
   DIA = diameter of drill (mm)

⚠ **WARNING** **Tool failure can cause serious injury. To prevent:**
- When using holders without support bushing, use a short T-A® holder to establish an initial hole that is a minimum of 2 diameters deep.
- Do not rotate tool holder more than 50 RPM unless it is engaged with the workpiece or fixture.

Visit **www.alliedmachine.com/DeepHoleGuidelines** for the most up-to-date information and procedures. Factory technical assistance is available for your specific applications through our Application Engineering Team.

T-A® Recommended Drilling Data | Metric (mm)

HSS Inserts

ISO	Material	Hardness (BHN)	HSS Grade	m/min TiN	m/min TiAlN	m/min TiCN	Feed Rate (mm/rev) by Diameter 9.50 mm - 12.95 mm	Feed Rate (mm/rev) by Diameter 12.98 mm - 17.52 mm
P	**Free-Machining Steel**	100 - 150	HSS	61	85	79	0.18	0.25
	1118, 1215, 12L14, etc.	150 - 200	HSS	55	79	72	0.18	0.25
		200 - 250	HSS	49	73	64	0.15	0.25
	Low-Carbon Steel	85 - 125	HSS	52	76	67	0.15 ❖	0.23
	1010, 1020, 1025, 1522, 1144, etc.	125 - 175	HSS	49	73	64	0.15 ❖	0.23
		175 - 225	HSS	46	69	59	0.13 ❖	0.20
		225 - 275	HSS	43	64	55	0.13 ❖	0.20
	Medium-Carbon Steel	125 - 175	HSS	49	73	64	0.15	0.23
	1030, 1040, 1050, 1527, 1140, 1151, etc.	175 - 225	HSS	46	69	59	0.13	0.20
		225 - 275	HSS	43	64	55	0.13	0.20
		275 - 325	SC, PC	40	59	52	0.10	0.18
	Alloy Steel	125 - 175	HSS	46	64	59	0.15	0.20
	4140, 5140, 8640, etc.	175 - 225	HSS	43	59	55	0.13	0.20
		225 - 275	HSS	40	55	52	0.13	0.18
		275 - 325	SC, PC	37	52	47	0.10	0.15
		325 - 375	SC, PC	34	47	44	0.08	0.15
	High-Strength Alloy	225 - 300	SC, PC	24	34	30	0.13 ❖	0.18
	4340, 4330V, 300M, etc.	300 - 350	SC, PC	18	26	24	0.10 ❖	0.18
		350 - 400	PC	15	21	20	0.08 ❖	0.15
	Structural Steel	100 - 150	HSS	43	61	55	0.15 ❖	0.25
	A36, A285, A516, etc.	150 - 250	HSS	37	52	47	0.13 ❖	0.23
		250 - 350	SC, PC	30	43	40	0.10 ❖	0.20
	Tool Steel	150 - 200	SC	24	34	32	0.10	0.15
	H-13, H-21, A-4, 0-2, S-3, etc.	200 - 250	SC, PC	18	27	26	0.10	0.15
S	**High-Temp Alloy**	140 - 220	SC, PC	9	12	11	0.08 ❖	0.18
	Hastelloy B, Inconel 600, etc.	220 - 310	PC	8	11	9	0.08 ❖	0.15
	Titanium Alloy	140 - 220	SC, PC	11	15	14	0.08 ❖	0.18
		220 - 310	PC	9	14	11	0.08 ❖	0.15
	Aerospace Alloy	185 - 275	SC, PC	23	32	29	0.15 ❖	0.20
	S82	275 - 350	SC, PC	18	27	24	0.13 ❖	0.18
M	**Stainless Steel 400 Series**	185 - 275	SC, PC	23	32	29	0.15 ❖	0.20
	416, 420, etc.	275 - 350	SC, PC	18	27	24	0.13 ❖	0.18
	Stainless Steel 300 Series	135 - 185	SC, PC	23	32	29	0.08 ❖	0.18
	304, 316, 17-4PH, etc.	185 - 275	SC, PC	18	27	24	0.08 ❖	0.15
	Super Duplex Stainless Steel	135 - 185	SC, PC	18	24	21	0.08 ❖	0.18
		185 - 275	SC, PC	15	20	18	0.08 ❖	0.15
H	**Wear Plate**	400	SC, PC	14	21	17	0.08 ❖	0.15
	Hardox®, AR400, T-1, etc.	500	PC	11	14	12	0.05 ❖	0.13
		600	N/A	–	–	–	–	–
	Hardened Steel	300 - 400	PC	15	29	21	0.08 ❖	0.15
		400 - 500	PC	11	14	12	0.05 ❖	0.13
K	**Nodular, Grey, Ductile Cast Iron**	120 - 150	HSS	52	76	67	0.18	0.30
		150 - 200	HSS	46	69	59	0.15	0.28
		200 - 220	HSS	40	59	52	0.15	0.23
		220 - 260	SC, PC	34	50	44	0.13	0.18
		260 - 320	SC, PC	27	41	37	0.10	0.15
N	**Cast Aluminum**	30	HSS	183	259	229	0.20	0.33
		180	HSS	91	137	122	0.20	0.33
	Wrought Aluminum	30	HSS	183	259	229	0.10	0.15
		180	HSS	91	137	122	0.20	0.33
	Aluminum Bronze	100 - 200	SC	52	76	67	0.15	0.28
		200 - 250	SC	40	58	52	0.13	0.18
	Brass	100	HSS	91	136	122	0.18	0.30
	Copper	60	SC	40	50	46	0.05 ❖	0.08

❖ Contact our Application Engineering department for assistance when machining these materials.

IMPORTANT: The speeds and feeds listed above are a general starting point for all applications. Refer to the Coolant Recommendation charts for coolant requirements to run at the recommended speeds and feeds. Factory technical assistance is available through our Application Engineering department. See adjustment examples on the following page.

Feed Rate (mm/rev) by Diameter				
17.53 mm - 24.38 mm	24.41 mm - 35.00 mm	35.01 mm - 47.80 mm	47.85 mm - 65.99 mm	66.00 mm - 114.48 mm
0.33	0.41	0.51	0.58	0.71
0.33	0.41	0.51	0.58	0.71
0.33	0.41	0.51	0.58	0.71
0.30	0.38	0.48	0.58	0.69
0.30	0.38	0.48	0.58	0.69
0.25	0.36	0.46	0.53	0.61
0.25	0.36	0.46	0.53	0.61
0.30	0.38	0.48	0.58	0.69
0.25	0.36	0.46	0.53	0.61
0.25	0.36	0.46	0.53	0.61
0.23	0.30	0.41	0.48	0.56
0.25	0.36	0.43	0.48	0.56
0.25	0.36	0.43	0.48	0.56
0.25	0.36	0.43	0.48	0.56
0.23	0.30	0.38	0.43	0.51
0.23	0.30	0.38	0.43	0.51
0.23	0.25	0.36	0.43	0.51
0.23	0.25	0.36	0.43	0.51
0.20	0.23	0.30	0.38	0.46
0.30	0.36	0.46	0.53	0.66
0.25	0.30	0.41	0.48	0.61
0.23	0.25	0.36	0.43	0.51
0.20	0.25	0.30	0.38	0.43
0.20	0.25	0.30	0.38	0.43
0.20	0.25	0.30	0.38	–
0.18	0.20	0.25	0.30	–
0.20	0.25	0.30	0.38	–
0.18	0.20	0.25	0.30	–
0.23	0.25	0.36	0.41	0.51
0.20	0.20	0.30	0.36	0.46
0.23	0.25	0.36	0.41	0.51
0.20	0.20	0.30	0.36	0.46
0.20	0.25	0.36	0.41	0.51
0.18	0.20	0.30	0.36	0.46
0.20	0.25	0.36	0.41	0.51
0.18	0.20	0.30	0.36	0.46
0.20	0.23	0.30	0.41	0.46
0.18	0.20	0.25	0.30	0.41
–	–	–	–	–
0.20	0.23	0.30	0.41	0.46
0.18	0.20	0.25	0.30	0.41
0.41	0.51	0.61	0.69	0.76
0.36	0.46	0.56	0.64	0.71
0.30	0.41	0.46	0.53	0.61
0.23	0.30	0.36	0.43	0.51
0.18	0.23	0.30	0.36	0.41
0.41	0.51	0.56	0.64	0.64
0.41	0.46	0.56	0.64	0.64
0.25	0.30	0.56	0.64	0.64
0.41	0.46	0.56	0.64	0.64
0.36	0.46	0.56	0.66	0.71
0.23	0.30	0.36	0.43	0.51
0.41	0.51	0.61	0.71	0.76
0.15	0.20	0.30	0.36	0.41

Deep Hole Drilling Speed and Feed Adjustment

	Holder Length				
	Extended	Long	Long Plus	XL	3XL
Speed	0.90	0.85	0.80	0.80	0.75
Feed	–	0.95	0.90	0.90	0.90

Recommended Speed and Feed Example

If the recommended speed and feed is 50 m/min and 0.20 mm/rev for a standard length holder, then the speed and feed using a 3XL holder in the same application would be 37.5 m/min and 0.18 mm/rev.

50 • 0.75 = 37.5 m/min	0.20 • 0.90 = 0.18 mm/rev

Formulas

1. **RPM = (318.47 • m/min) / DIA**

   where:
   RPM = revolutions per minute (rev/min)
   m/min = speed (m/min)
   DIA = diameter of drill (mm)

2. **mm/min = RPM • mm/rev**

   where:
   mm/min = mm per minute (mm/min)
   RPM = revolutions per minute (rev/min)
   mm/rev = feed rate (mm/rev)

3. **m/min = RPM • 0.003 • DIA**

   where:
   m/min = speed (m/min)
   RPM = revolutions per minute (rev/min)
   DIA = diameter of drill (mm)

WARNING **Tool failure can cause serious injury. To prevent:**
- When using holders without support bushing, use a short T-A® holder to establish an initial hole that is a minimum of 2 diameters deep.
- Do not rotate tool holder more than 50 RPM unless it is engaged with the workpiece or fixture.

Visit **www.alliedmachine.com/DeepHoleGuidelines** for the most up-to-date information and procedures. Factory technical assistance is available for your specific applications through our Application Engineering Team.

T-A® Recommended Drilling Data | Metric (mm)

Carbide Inserts

ISO	Material	Hardness (BHN)	Carbide Grade	m/min TiN	m/min TiAlN	m/min TiCN	Feed Rate (mm/rev) by Diameter 9.50 mm - 12.95 mm	12.98 mm - 17.52 mm	17.53 mm - 24.38 mm	24.41 mm - 35.00 mm	35.01 mm - 47.80 mm
P	**Free-Machining Steel**	100 - 150	C5	96	128	115	0.20	0.30	0.38	0.45	0.53
	1118, 1215, 12L14, etc.	150 - 200	C5	85	110	100	0.18	0.28	0.35	0.40	0.48
		200 - 250	C5	79	104	90	0.15	0.25	0.33	0.38	0.43
	Low-Carbon Steel	85 - 125	C5	91	119	110	0.20 ❖	0.25	0.33	0.43	0.48
	1010, 1020, 1025, 1522,	125 - 175	C5	79	104	90	0.18 ❖	0.25	0.33	0.40	0.45
	1144, etc.	175 - 225	C5	73	95	82	0.15 ❖	0.23	0.30	0.38	0.43
		225 - 275	C5	64	83	75	0.13 ❖	0.23	0.30	0.38	0.43
	Medium-Carbon Steel	125 - 175	C5	79	104	90	0.18	0.25	0.33	0.40	0.45
	1030, 1040, 1050, 1527,	175 - 225	C5	73	95	84	0.15	0.23	0.30	0.38	0.43
	1140, 1151, etc.	225 - 275	C5	67	83	72	0.15	0.23	0.30	0.38	0.43
		275 - 325	C5	55	70	62	0.13	0.20	0.28	0.35	0.40
	Alloy Steel	125 - 175	C5	76	99	87	0.18	0.25	0.33	0.40	0.45
	4140, 5140, 8640, etc.	175 - 225	C5	70	92	80	0.15	0.23	0.30	0.38	0.43
		225 - 275	C5	64	83	72	0.15	0.23	0.30	0.38	0.43
		275 - 325	C5	61	76	68	0.13	0.20	0.28	0.35	0.40
		325 - 375	C5	52	67	60	0.10	0.18	0.25	0.33	0.38
	High-Strength Alloy	225 - 300	C5	49	61	55	0.15 ❖	0.23	0.25	0.30	0.38
	4340, 4330V, 300M, etc.	300 - 350	C5	43	55	49	0.13 ❖	0.20	0.23	0.28	0.35
		350 - 400	C5	37	49	43	0.10 ❖	0.18	0.20	0.25	0.30
	Structural Steel	100 - 150	C5	73	95	84	0.20 ❖	0.28	0.35	0.40	0.45
	A36, A285, A516, etc.	150 - 250	C5	61	76	68	0.15 ❖	0.25	0.30	0.35	0.40
		250 - 350	C5	55	70	62	0.13 ❖	0.23	0.28	0.30	0.35
	Tool Steel	150 - 200	C5	49	67	58	0.10	0.18	0.23	0.28	0.33
	H-13, H-21, A-4, 0-2, S-3, etc.	200 - 250	C5	37	52	45	0.10	0.18	0.23	0.28	0.33
S	**High-Temp Alloy**	140 - 220	C2	24	32	28	0.10 ❖	0.18	0.23	0.28	0.33
	Hastelloy B, Inconel 600, etc.	220 - 310	C2	18	26	22	0.10 ❖	0.15	0.20	0.25	0.30
	Titanium Alloy	140 - 220	C2	30	38	32	0.10 ❖	0.18	0.23	0.28	0.33
		220 - 310	C2	24	33	28	0.10 ❖	0.15	0.20	0.25	0.30
	Aerospace Alloy	185 - 275	C2	49	64	57	0.17 ❖	0.22	0.29	0.35	0.40
	S82	275 - 350	C2	37	49	43	0.14 ❖	0.19	0.27	0.30	0.35
M	**Stainless Steel 400 Series**	185 - 275	C2	49	64	57	0.17 ❖	0.22	0.29	0.35	0.40
	416, 420, etc.	275 - 350	C2	37	49	43	0.14 ❖	0.19	0.27	0.30	0.35
	Stainless Steel 300 Series	135 - 185	C2	49	64	57	0.13 ❖	0.17	0.22	0.26	0.30
	304, 316, 17-4PH, etc.	185 - 275	C2	37	49	43	0.11 ❖	0.14	0.20	0.22	0.25
	Super Duplex Stainless Steel	135 - 185	C2	25	33	29	0.11 ❖	0.15	0.19	0.23	0.27
		185 - 275	C2	19	25	22	0.09 ❖	0.13	0.18	0.20	0.23

❖ Contact our Application Engineering department for assistance when machining these materials.

IMPORTANT: The speeds and feeds listed above are a general starting point for all applications. Refer to the Coolant Recommendation charts for coolant requirements to run at the recommended speeds and feeds. Factory technical assistance is available through our Application Engineering department. See adjustment examples on the following page.

ISO	Material	Hardness (BHN)	Carbide Grade	m/min TiN	m/min TiAlN	m/min TiCN	Feed Rate (mm/rev) by Diameter 9.50 mm - 12.95 mm	12.98 mm - 17.52 mm	17.53 mm - 24.38 mm	24.41 mm - 35.00 mm	35.01 mm - 47.80 mm
H	**Wear Plate** Hardox®, AR400, T-1, etc.	400	C5	23	35	30	0.07	0.12	0.20	0.25	0.30
		500	C5	15	26	21	0.05	0.10	0.15	0.20	0.25
		600	C5	11	22	16	0.04	0.08	0.12	0.16	0.20
	Hardened Steel	300 - 400	C5	34	43	39	0.10 ❖	0.18	0.23	0.28	0.33
		400 - 500	C5	20	25	23	0.08 ❖	0.15	0.20	0.23	0.28
K	**Nodular, Grey, Ductile Cast Iron**	120 - 150	C2, C3	98	141	127	0.20	0.30	0.38	0.48	0.58
		150 - 200	C2, C3	82	122	102	0.18	0.28	0.33	0.43	0.53
		200 - 220	C2, C3	73	110	93	0.15	0.23	0.30	0.38	0.45
		220 - 260	C2, C3	64	95	79	0.13	0.20	0.28	0.33	0.38
		260 - 320	C2, C3	55	83	69	0.13	0.18	0.25	0.28	0.33
N	**Cast Aluminum**	30	C2	366	460	410	0.25	0.38	0.45	0.50	0.55
		180	C2	244	306	275	0.23	0.33	0.40	0.45	0.50
	Wrought Aluminum	30	C2	366	460	410	0.10	0.15	0.25	0.30	0.36
		180	C2	244	306	275	0.20	0.28	0.36	0.45	0.50
	Aluminum Bronze	100 - 200	C2	85	110	100	0.13	0.20	0.25	0.36	0.42
		200 - 250	C2	64	94	79	0.10	0.15	0.18	0.25	0.33
	Brass	100	C2	130	184	160	0.15	0.23	0.28	0.38	0.45
	Copper	60	C2	80	120	100	0.05 ❖	0.08	0.10	0.15	0.25

❖ Contact our Application Engineering department for assistance when machining these materials.

Deep Hole Drilling Speed and Feed Adjustment

	⚠ Holder Length				
	Extended	Long	Long Plus	XL	3XL
Speed	0.90	0.85	0.80	0.80	0.75
Feed	–	0.95	0.90	0.90	0.90

Recommended Speed and Feed Example

If the recommended speed and feed is 50 m/min and 0.20 mm/rev for a standard length holder, then the speed and feed using a 3XL holder in the same application would be 37.5 m/min and 0.18 mm/rev.

50 • 0.75 = 37.5 m/min	0.20 • 0.90 = 0.18 mm/rev

Formulas

1. **RPM = (318.47 • m/min) / DIA**

where:

RPM = revolutions per minute (rev/min)
m/min = speed (m/min)
DIA = diameter of drill (mm)

2. **mm/min = RPM • mm/rev**

where:

mm/min = mm per minute (mm/min)
RPM = revolutions per minute (rev/min)
mm/rev = feed rate (mm/rev)

3. **m/min = RPM • 0.003 • DIA**

where:

m/min = speed (m/min)
RPM = revolutions per minute (rev/min)
DIA = diameter of drill (mm)

⚠ WARNING **Tool failure can cause serious injury. To prevent:**

- When using holders without support bushing, use a short T-A® holder to establish an initial hole that is a minimum of 2 diameters deep.
- Do not rotate tool holder more than 50 RPM unless it is engaged with the workpiece or fixture.

Visit **www.alliedmachine.com/DeepHoleGuidelines** for the most up-to-date information and procedures. Factory technical assistance is available for your specific applications through our Application Engineering Team.

T-A® Recommended Drilling Data | Metric (mm)

HSS Inserts | Flat Bottom Geometry

ISO	Material	Hardness (BHN)	HSS Grade	m/min TiN	TiAlN	TiCN	AM200®
P	**Free-Machining Steel** 1118, 1215, 12L14, etc.	100 - 150	HSS	52	76	70	88
		150 - 200	HSS	47	70	62	81
		200 - 250	HSS	43	64	56	74
	Low-Carbon Steel 1010, 1020, 1025, 1522, 1144, etc.	85 - 125	HSS	46	67	59	77
		125 - 175	HSS	43	64	56	74
		175 - 225	HSS	40	59	53	68
		225 - 275	HSS	37	56	47	65
	Medium-Carbon Steel 1030, 1040, 1050, 1527, 1140, 1151, etc.	125 - 175	HSS	43	64	56	74
		175 - 225	HSS	40	59	53	68
		225 - 275	HSS	37	56	47	65
		275 - 325	SC	34	53	46	61
	Alloy Steel 4140, 5140, 8640, etc.	125 - 175	HSS	40	56	53	65
		175 - 225	HSS	37	53	47	61
		225 - 275	HSS	34	47	44	54
		275 - 325	SC	32	44	41	51
		325 - 375	SC	29	41	38	47
	High-Strength Alloy 4340, 4330V, 300M, etc.	225 - 300	SC	21	29	26	33
		300 - 350	SC	15	23	21	27
		350 - 400	SC	13	20	18	23
	Structural Steel A36, A285, A516, etc.	100 - 150	HSS	36	52	47	60
		150 - 250	HSS	32	44	41	51
		250 - 350	SC	26	37	34	43
	Tool Steel H-13, H-21, A-4, 0-2, S-3, etc.	150 - 200	SC	21	29	27	33
		200 - 250	SC	15	24	23	28
S	**High-Temp Alloy** Hastelloy B, Inconel 600, etc.	140 - 220	SC	7	10	9	13
		220 - 310	SC	6	9	7	10
	Titanium Alloy	140 - 220	SC	10	14	12	16
		220 - 310	SC	8	12	11	14
	Aerospace Alloy S82	185 - 275	SC	20	27	26	34
		275 - 350	SC	15	24	21	28
M	**Stainless Steel 400 Series** 416, 420, etc.	185 - 275	SC	20	27	26	34
		275 - 350	SC	15	24	21	28
	Stainless Steel 300 Series 304, 316, 17-4PH, etc.	135 - 185	SC	20	27	26	34
		185 - 275	SC	15	24	21	28
	Super Duplex Stainless Steel	135 - 185	SC	20	27	26	34
		185 - 275	SC	15	24	21	28
H	**Wear Plate** Hardox®, AR400, T-1, etc.	400	SC	–	–	–	–
		500	SC	–	–	–	–
		600	N/A	–	–	–	–
	Hardened Steel	300 - 400	SC	13	20	18	24
		400 - 500	SC	8	12	10	13
K	**Nodular, Grey, Ductile Cast Iron**	120 - 150	HSS	46	67	59	77
		150 - 200	HSS	40	59	53	68
		200 - 220	HSS	34	53	46	61
		220 - 260	SC	29	46	38	53
		260 - 320	SC	24	37	32	43
N	**Cast Aluminum**	30	HSS	160	228	198	–
		180	HSS	79	122	107	–
	Wrought Aluminum	30	HSS	160	228	198	261
		180	HSS	79	122	107	141
	Aluminum Bronze	100 - 200	SC	40	59	53	70
		200 - 250	SC	29	46	38	50
	Brass	100	HSS	46	67	59	78
	Copper	60	SC	35	45	40	53

❖ Contact our Application Engineering department for assistance when machining these materials.

IMPORTANT: The speeds and feeds listed above are a general starting point for all applications. Refer to the Coolant Recommendation charts for coolant requirements to run at the recommended speeds and feeds. Factory technical assistance is available through our Application Engineering department. See adjustment examples on the following page.

Feed Rate (mm/rev) by Diameter					
9.50 mm - 12.95 mm	12.98 mm - 17.53 mm	17.53 mm - 24.38 mm	24.21 mm - 35.00 mm	35.01 mm - 47.80 mm	47.85 mm - 65.99 mm
0.15	0.23	0.28	0.35	0.41	0.46
0.15	0.23	0.28	0.35	0.41	0.46
0.13	0.23	0.28	0.35	0.38	0.43
0.13 ❖	0.20	0.25	0.33	0.38	0.43
0.13 ❖	0.20	0.25	0.33	0.38	0.41
0.10 ❖	0.18	0.23	0.30	0.36	0.41
0.10 ❖	0.18	0.23	0.30	0.36	0.38
0.13	0.20	0.25	0.33	0.38	0.46
0.10	0.18	0.23	0.30	0.36	0.43
0.10	0.18	0.23	0.30	0.36	0.43
0.10	0.15	0.20	0.25	0.33	0.38
0.13	0.18	0.23	0.30	0.33	0.41
0.10	0.18	0.23	0.30	0.33	0.41
0.10	0.15	0.23	0.30	0.33	0.41
0.10	0.13	0.20	0.25	0.30	0.38
0.08	0.13	0.20	0.25	0.30	0.36
0.10 ❖	0.15	0.20	0.23	0.25	0.30
0.08 ❖	0.15	0.20	0.23	0.25	0.30
0.08 ❖	0.13	0.18	0.20	0.23	0.28
0.13 ❖	0.23	0.25	0.30	0.38	0.43
0.10 ❖	0.20	0.23	0.25	0.33	0.41
0.10 ❖	0.18	0.20	0.23	0.30	0.38
0.10	0.13	0.18	0.23	0.25	0.30
0.10	0.13	0.18	0.23	0.23	0.28
0.08 ❖	0.15	0.18	0.23	0.25	0.30
0.08 ❖	0.13	0.15	0.18	0.20	0.25
0.08 ❖	0.15	0.18	0.23	0.25	0.30
0.08 ❖	0.13	0.15	0.18	0.20	0.25
0.13 ❖	0.18	0.20	0.25	0.30	0.38
0.10 ❖	0.15	0.18	0.23	0.25	0.30
0.13 ❖	0.18	0.20	0.25	0.30	0.36
0.10 ❖	0.15	0.18	0.23	0.25	0.28
0.13 ❖	0.18	0.20	0.25	0.30	0.36
0.10 ❖	0.15	0.18	0.23	0.25	0.28
0.13 ❖	0.18	0.20	0.25	0.30	0.36
0.10 ❖	0.15	0.18	0.23	0.25	0.28
–	–	–	–	–	–
–	–	–	–	–	–
–	–	–	–	–	–
0.08 ❖	0.13	0.18	0.20	0.27	0.38
0.06 ❖	0.10	0.15	0.18	0.23	0.28
0.15	0.25	0.36	0.43	0.48	0.51
0.13	0.23	0.30	0.41	0.46	0.48
0.13	0.20	0.25	0.36	0.41	0.43
0.10	0.15	0.20	0.25	0.33	0.33
0.10	0.13	0.15	0.20	0.25	0.25
0.18	0.28	0.36	0.43	0.46	0.48
0.18	0.28	0.36	0.41	0.43	0.48
0.18	0.28	0.36	0.43	0.46	0.48
0.18	0.28	0.36	0.41	0.43	0.48
0.13	0.23	0.30	0.41	0.51	0.61
0.10	0.15	0.20	0.25	0.31	0.38
0.15	0.25	0.36	0.43	0.53	0.63
0.05 ❖	0.08	0.15	0.20	0.25	0.35

Deep Hole Drilling Speed and Feed Adjustment

	⚠ Holder Length				
	Extended	Long	Long Plus	XL	3XL
Speed	0.90	0.85	0.80	0.80	0.75
Feed	–	0.95	0.90	0.90	0.90

Recommended Speed and Feed Example

If the recommended speed and feed is 50 m/min and 0.20 mm/rev for a standard length holder, then the speed and feed using a 3XL holder in the same application would be 37.5 m/min and 0.18 mm/rev.

50 • 0.75 = 37.5 m/min	0.20 • 0.90 = 0.18 mm/rev

Formulas

1. **RPM = (318.47 • m/min) / DIA**

   where:
   RPM = revolutions per minute (rev/min)
   m/min = speed (m/min)
   DIA = diameter of drill (mm)

2. **mm/min = RPM • mm/rev**

   where:
   mm/min = mm per minute (mm/min)
   RPM = revolutions per minute (rev/min)
   mm/rev = feed rate (mm/rev)

3. **m/min = RPM • 0.003 • DIA**

   where:
   m/min = speed (m/min)
   RPM = revolutions per minute (rev/min)
   DIA = diameter of drill (mm)

⚠ **WARNING** **Tool failure can cause serious injury. To prevent:**
- When using holders without support bushing, use a short T-A® holder to establish an initial hole that is a minimum of 2 diameters deep.
- Do not rotate tool holder more than 50 RPM unless it is engaged with the workpiece or fixture.

Visit **www.alliedmachine.com/DeepHoleGuidelines** for the most up-to-date information and procedures. Factory technical assistance is available for your specific applications through our Application Engineering Team.

T-A® Recommended Drilling Data | Metric (mm)

Carbide Inserts | Flat Bottom Geometry

ISO	Material	Hardness (BHN)	Carbide Grade	m/min				Feed Rate (mm/rev) by Diameter			
				TiN	TiAlN	TiCN	AM200®	9.50 mm - 12.95 mm	12.98 mm - 17.53 mm	17.54 mm - 24.38 mm	24.41 mm - 35.00 mm
P	**Free-Machining Steel**	100 - 150	C2	82	110	98	126	0.17	0.26	0.32	0.39
	1118, 1215, 12L14, etc.	150 - 200	C2	73	94	85	110	0.15	0.24	0.30	0.35
		200 - 250	C2	67	88	76	102	0.13	0.22	0.28	0.32
	Low-Carbon Steel	85 - 125	C2	79	102	94	117	0.17 ❖	0.22	0.28	0.37
	1010, 1020, 1025, 1522,	125 - 175	C2	67	88	76	102	0.15 ❖	0.22	0.28	0.35
	1144, etc.	175 - 225	C2	61	81	70	93	0.13 ❖	0.19	0.26	0.32
		225 - 275	C2	55	70	64	81	0.11 ❖	0.19	0.26	0.32
	Medium-Carbon Steel	125 - 175	C2	67	88	76	102	0.15	0.22	0.28	0.35
	1030, 1040, 1050, 1527,	175 - 225	C2	61	81	72	93	0.13	0.19	0.26	0.32
	1140, 1151, etc.	225 - 275	C2	55	70	61	81	0.13	0.19	0.26	0.32
		275 - 325	C2	46	61	53	70	0.11	0.17	0.24	0.30
	Alloy Steel	125 - 175	C2	64	85	75	99	0.15	0.22	0.28	0.35
	4140, 5140, 8640, etc.	175 - 225	C2	59	79	67	91	0.13	0.19	0.26	0.32
		225 - 275	C2	55	70	61	81	0.13	0.19	0.26	0.32
		275 - 325	C2	52	66	58	76	0.11	0.17	0.24	0.30
		325 - 375	C2	44	58	50	67	0.09	0.15	0.22	0.28
	High-Strength Alloy	225 - 300	C2	41	52	47	59	0.13 ❖	0.19	0.22	0.26
	4340, 4330V, 300M, etc.	300 - 350	C2	37	47	41	55	0.11 ❖	0.17	0.19	0.24
		350 - 400	C2	30	41	37	47	0.09 ❖	0.15	0.17	0.22
	Structural Steel	100 - 150	C2	62	81	72	93	0.17 ❖	0.24	0.30	0.35
	A36, A285, A516, etc.	150 - 250	C2	52	66	58	76	0.13 ❖	0.22	0.28	0.30
		250 - 350	C2	47	61	53	70	0.11 ❖	0.19	0.25	0.26
	Tool Steel	150 - 200	C2	41	58	49	67	0.09	0.15	0.19	0.24
	H-13, H-21, A-4, 0-2, S-3, etc.	200 - 250	C2	30	44	37	50	0.09	0.15	0.19	0.24
S	**High-Temp Alloy**	140 - 220	C2	21	27	23	32	0.09 ❖	0.15	0.19	0.24
	Hastelloy B, Inconel 600, etc.	220 - 310	C2	15	21	18	24	0.09 ❖	0.13	0.17	0.22
	Titanium Alloy	140 - 220	C2	26	33	28	40	0.08 ❖	0.14	0.17	0.20
		220 - 310	C2	21	29	25	30	0.08 ❖	0.12	0.15	0.18
	Aerospace Alloy	185 - 275	C2	43	37	50	40	0.15 ❖	0.17	0.25	0.30
	S82	275 - 350	C2	33	28	38	32	0.13 ❖	0.15	0.23	0.25
M	**Stainless Steel 400 Series**	185 - 275	C2	43	56	50	64	0.15 ❖	0.20	0.25	0.30
	416, 420, etc.	275 - 350	C2	33	43	38	49	0.13 ❖	0.18	0.23	0.25
	Stainless Steel 300 Series	135 - 185	C2	28	37	33	40	0.13 ❖	0.17	0.21	0.25
	304, 316, 17-4PH, etc.	185 - 275	C2	21	28	25	32	0.11 ❖	0.15	0.19	0.21
	Super Duplex Stainless Steel	135 - 185	C2	22	29	26	33	0.10 ❖	0.14	0.17	0.20
		185 - 275	C2	17	22	19	26	0.08 ❖	0.12	0.15	0.17

❖ Contact our Application Engineering department for assistance when machining these materials.

IMPORTANT: The speeds and feeds listed above are a general starting point for all applications. Refer to the Coolant Recommendation charts for coolant requirements to run at the recommended speeds and feeds. Factory technical assistance is available through our Application Engineering department. See adjustment examples on the following page.

ISO	Material	Hardness (BHN)	Carbide Grade	m/min				Feed Rate (mm/rev) by Diameter			
				TiN	TiAlN	TiCN	AM200®	9.50 mm - 12.95 mm	12.98 mm - 17.53 mm	17.54 mm - 24.38 mm	24.41 mm - 35.00 mm
H	**Wear Plate**	400	C2	20	31	26	39	0.06 ❖	0.10	0.16	0.20
	Hardox®, AR400, T-1, etc.	500	C2	13	23	18	31	0.04 ❖	0.08	0.12	0.16
		600	C2	10	19	14	25	0.03 ❖	0.06	0.10	0.13
	Hardened Steel	300 - 400	C2	30	38	34	41	0.08 ❖	0.14	0.18	0.22
		400 - 500	C2	18	22	20	33	0.06 ❖	0.12	0.16	0.18
K	**Nodular, Grey, Ductile Cast Iron**	120 - 150	C2	82	120	108	137	0.17	0.26	0.32	0.41
		150 - 200	C2	70	104	87	119	0.15	0.24	0.28	0.38
		200 - 220	C2	61	94	79	108	0.13	0.19	0.26	0.32
		220 - 260	C2	55	81	67	93	0.11	0.17	0.24	0.28
		260 - 320	C2	47	70	58	81	0.11	0.15	0.22	0.24
N	**Cast Aluminum**	30	C2	160	228	198	–	0.22	0.32	0.41	0.43
		180	C2	79	122	107	–	0.19	0.28	0.35	0.39
	Wrought Aluminum	30	C2	292	368	328	390	0.12	0.18	0.23	0.25
		180	C2	195	245	220	260	0.10	0.16	0.20	0.22
	Aluminum Bronze	100 - 200	C2	73	95	85	105	0.10	0.16	0.20	0.29
		200 - 250	C2	55	81	68	87	0.08	0.12	0.14	0.20
	Brass	100	C2	112	160	138	185	0.12	0.18	0.22	0.30
	Copper	60	C2	68	105	85	117	0.04 ❖	0.06	0.08	0.12

❖ Contact our Application Engineering department for assistance when machining these materials.

Deep Hole Drilling Speed and Feed Adjustment

	⚠ Holder Length				
	Extended	**Long**	**Long Plus**	**XL**	**3XL**
Speed	0.90	0.85	0.80	0.80	0.75
Feed	–	0.95	0.90	0.90	0.90

Recommended Speed and Feed Example

If the recommended speed and feed is 50 m/min and 0.20 mm/rev for a standard length holder, then the speed and feed using a 3XL holder in the same application would be 37.5 m/min and 0.18 mm/rev.

50 • 0.75 = 37.5 m/min	0.20 • 0.90 = 0.18 mm/rev

Formulas

1. **RPM = (318.47 • m/min) / DIA**

where:

RPM	= revolutions per minute (rev/min)
m/min	= speed (m/min)
DIA	= diameter of drill (mm)

2. **mm/min = RPM • mm/rev**

where:

mm/min	= mm per minute (mm/min)
RPM	= revolutions per minute (rev/min)
mm/rev	= feed rate (mm/rev)

3. **m/min = RPM • 0.003 • DIA**

where:

m/min	= speed (m/min)
RPM	= revolutions per minute (rev/min)
DIA	= diameter of drill (mm)

⚠ **WARNING** **Tool failure can cause serious injury. To prevent:**

- When using holders without support bushing, use a short T-A® holder to establish an initial hole that is a minimum of 2 diameters deep.
- Do not rotate tool holder more than 50 RPM unless it is engaged with the workpiece or fixture.

Visit **www.alliedmachine.com/DeepHoleGuidelines** for the most up-to-date information and procedures. Factory technical assistance is available for your specific applications through our Application Engineering Team.

T-A® Recommended Drilling Data | Metric (mm)

Carbide Inserts | Diamond Coating

	Material	Carbide Grade	m/min Diamond Coating	Feed Rate (mm/rev) by Diameter 9.5 mm - 12.5 mm	13 mm - 17.5 mm	18 mm - 24 mm	25 mm - 35 mm
Polymer Matrix Composites	Carbon (hard)	N2	305 - 450	0.10 - 0.15	0.20 - 0.25	0.25 - 0.30	0.30 - 0.36
	Carbon Fiber	N2	305 - 450	0.10 - 0.15	0.20 - 0.25	0.25 - 0.30	0.30 - 0.36
	Carbon / Glass Fiber	N2	305 - 450	0.10 - 0.15	0.20 - 0.25	0.25 - 0.30	0.30 - 0.36
	Fiberglass	N2	305 - 450	0.10 - 0.15	0.20 - 0.25	0.25 - 0.30	0.30 - 0.36
	Graphite	N2	305 - 450	0.10 - 0.15	0.20 - 0.25	0.25 - 0.30	0.30 - 0.36
	Plastics	N2	76 - 305	0.10 - 0.15	0.20 - 0.25	0.25 - 0.30	0.30 - 0.36
	Epoxy Resin	N2	76 - 305	0.10 - 0.15	0.20 - 0.25	0.25 - 0.30	0.30 - 0.36
	Bismaleimide Resin	N2	76 - 305	0.10 - 0.15	0.20 - 0.25	0.25 - 0.30	0.30 - 0.36
	Polyester Resin	N2	76 - 305	0.10 - 0.15	0.20 - 0.25	0.25 - 0.30	0.30 - 0.36
	Phenolic Resin	N2	76 - 305	0.10 - 0.15	0.20 - 0.25	0.25 - 0.30	0.30 - 0.36
	Rubber	N2	76 - 305	0.10 - 0.15	0.20 - 0.25	0.25 - 0.30	0.30 - 0.36
Metal Matrix Composites	Aluminum	N2	305	0.20	0.33	0.41	0.51
	Si < 10%	N2	305	0.20	0.33	0.41	0.51
	10% < Si < 15%	N2	259 - 305	0.20	0.33	0.41	0.51
	15% < SI < 20%	N2	198 - 259	0.20	0.33	0.41	0.51
	20% < Si < 25%	N2	152 - 198	0.20	0.33	0.41	0.51
	25% < Si	N2	61 - 152	0.20	0.33	0.41	0.51
	Brass	N2	76 - 152	0.20	0.33	0.41	0.51
	Bronze	N2	76 - 152	0.20	0.33	0.41	0.51
	Copper	N2	30 - 76	0.10 - 0.15	0.20 - 0.25	0.25 - 0.30	0.30 - 0.36
	Copper Alloys	N2	30 - 76	0.10 - 0.15	0.20 - 0.25	0.25 - 0.30	0.30 - 0.36
	Lead Alloys	N2	30 - 76	0.10 - 0.15	0.20 - 0.25	0.25 - 0.30	0.30 - 0.36
	Magnesium Alloys	N2	30 - 76	0.10 - 0.15	0.20 - 0.25	0.25 - 0.30	0.30 - 0.36
	Precious Metals	N2	30 - 76	0.10 - 0.15	0.20 - 0.25	0.25 - 0.30	0.30 - 0.36
Ceramic Matrix Composites	Carbide (green)	N2	15 - 76	0.10 - 0.15	0.20 - 0.25	0.25 - 0.30	0.30 - 0.36
	Ceramic (green)	N2	15 - 76	0.10 - 0.15	0.20 - 0.25	0.25 - 0.30	0.30 - 0.36
	Ceramic (pre-sintered)	N2	15 - 76	0.10 - 0.15	0.20 - 0.25	0.25 - 0.30	0.30 - 0.36

Deep Hole Drilling Speed and Feed Adjustment

	⚠ Holder Length				
	Extended	Long	Long Plus	XL	3XL
Speed	0.90	0.85	0.80	0.80	0.75
Feed	–	0.95	0.90	0.90	0.90

Recommended Speed and Feed Example

If the recommended speed and feed is 50 m/min and 0.20 mm/rev for a standard length holder, then the speed and feed using a 3XL holder in the same application would be 37.5 m/min and 0.18 mm/rev.

50 • 0.75 = 37.5 m/min	0.20 • 0.90 = 0.18 mm/rev

⚠ WARNING **Tool failure can cause serious injury. To prevent:**

- When using holders without support bushing, use a short T-A® holder to establish an initial hole that is a minimum of 2 diameters deep.
- Do not rotate tool holder more than 50 RPM unless it is engaged with the workpiece or fixture.

Visit **www.alliedmachine.com/DeepHoleGuidelines** for the most up-to-date information and procedures. Factory technical assistance is available for your specific applications through our Application Engineering Team.

IMPORTANT: The speeds and feeds listed above are a general starting point for all applications. Refer to the Coolant Recommendation charts for coolant requirements to run at the recommended speeds and feeds. Factory technical assistance is available through our Application Engineering department. See adjustment examples on the following page.

Tap Drill Information and Formulas | Metric (mm)

Metric Profile Screw Thread

Tap Size	Tap Drill Size	Decimal Equivalent	* Theo % Thread	Probable Mean Oversize	Probable Hole Size	** Probable % Thread
12 x 1.75	10.2 mm	0.4016"	79%	0.075 mm	10.28 mm	76%
12 x 1.75	13/32"	0.4063"	74%	0.075 mm	10.40 mm	71%
12 x 1.25	27/64"	0.4219"	79%	0.075 mm	10.79 mm	74%
12 x 1.25	10.8 mm	0.4252"	74%	0.075 mm	10.88 mm	69%
14 x 20	15/32"	0.4688"	81%	0.075 mm	11.98 mm	78%
14 x 20	12.0 mm	0.4724"	77%	0.075 mm	12.08 mm	74%
14 x 1.5	12.5 mm	0.4921"	77%	0.075 mm	12.58 mm	73%
16 x 2.0	14.0 mm	0.5512"	77%	0.075 mm	14.08 mm	74%
16 x 1.5	14.5 mm	0.5709"	77%	0.075 mm	14.58 mm	73%
16 x 1.5	37/64"	0.5781"	68%	0.075 mm	14.76 mm	64%
18 x 2.5	15.5 mm	0.6102"	77%	0.075 mm	15.58 mm	75%
18 x 1.5	16.5 mm	0.6496"	77%	0.075 mm	16.58 mm	73%
18 x 1.5	21/32"	0.6563"	68%	0.075 mm	16.75 mm	64%
20 x 2.5	11/16"	0.6875"	78%	0.075 mm	17.54 mm	76%
20 x 2.5	17.5 mm	0.6890"	77%	0.07 5mm	17.58 mm	74%
20 x 1.5	18.5 mm	0.7283"	77%	0.075 mm	18.58 mm	73%
20 x 1.5	47/64"	0.7344"	69%	0.075 mm	18.66 mm	65%
22 x 2.5	49/64"	0.7656"	79%	0.075 mm	19.52 mm	76%
22 x 2.5	19.5 mm	0.7677"	77%	0.075 mm	19.58 mm	75%
22 x 1.5	20.5 mm	0.8071"	77%	0.075 mm	20.58 mm	73%
22 x 1.5	13/16"	0.8125"	70%	0.075 mm	20.71 mm	66%
24 x 3	13/16"	0.8125"	86%	0.075 mm	20.71 mm	84%
24 x 3	21.0 mm	0.8268"	76%	0.075 mm	21.08 mm	75%
24 x 2	22.0 mm	0.8661"	77%	0.075 mm	22.08 mm	74%
24 x 2	7/8"	0.8750"	68%	0.075 mm	22.30 mm	65%
27 x 3	24.0 mm	0.9449"	77%	0.075 mm	24.08 mm	75%

Formulas

1. **RPM = (318.47 • m/min) / DIA**

   where:
   - RPM = revolutions per minute (rev/min)
   - m/min = speed (m/min)
   - DIA = diameter of drill (mm)

2. **mm/min = RPM • mm/rev**

   where:
   - mm/min = mm per minute (mm/min)
   - RPM = revolutions per minute (rev/min)
   - mm/rev = feed rate (mm/rev)

3. **m/min = RPM • 0.003 • DIA**

   where:
   - m/min = speed (m/min)
   - RPM = revolutions per minute (rev/min)
   - DIA = diameter of drill (mm)

4. **Thrust = 154 • (mm/rev) • DIA • K_m**

   where:
   - Thrust = axial thrust (N)
   - mm/rev = feed rate (mm/rev)
   - DIA = diameter of drill (mm)
   - K_m = specific cutting energy (kPa)

5. **Tool Power = ((mm/rev) • RPM • K_m • DIA^2) / 210604.8**

   where:
   - Tool Power = tool power (HP)
   - mm/rev = feed rate (mm/rev)
   - RPM = revolutions per minute (rev/min)
   - K_m = specific cutting energy (kPa)
   - DIA = diameter of drill (mm)

Taper Pipe Thread (NPT)

Tap Size	Tap Drill Size	Decimal Equivalent	Theo % Thread*	Probable Mean Oversize	Probable Hole Size	Probable % Thread**
1/4 - 18	7/16	0.4375	–	0.075 mm	11.19 mm	–
3/8 - 18	9/16	0.5625	–	0.075 mm	14.76 mm	–
1/2 - 14	45/64	0.7031	–	0.075 mm	18.33 mm	–
3/4 - 14	29/32	0.9063	–	0.075 mm	23.89 mm	–

* Based on nominal tap drill diameter.
** Based on 0.075 mm probable mean oversize.

To calculate the percent of full thread for a given hole diameter:

$$\% \text{ Thread} = \left[\frac{76.93}{\text{Pitch (mm)}}\right]\left[\text{Basic Major Diameter of Thread (mm)} - \text{Drill Hole Size (mm)}\right]$$

Material Constants

Type of Material	Hardness	K_m (kPa)
Plain Carbon and Alloy Steel	85 - 200 BHN	5.45
	200 - 275 BHN	6.48
	275 - 375 BHN	6.89
	375 - 425 BHN	7.93
High-Temperature Alloys	–	9.93
Stainless Steels	135 - 275 BHN	6.48
	30 - 45 RC	7.45
Cast Iron	100 - 200 BHN	3.45
	200 - 300 BHN	7.45
Copper Alloy	20 - 80 RB	2.96
	80 - 100 RB	4.96
Titanium Alloy	–	4.96
Aluminum Alloy	–	1.52
Magnesium Alloy	–	1.10

Notes

- The above tap drill information represents probable thread percentages for the standard tap drills stocked at Allied Machine. Special insert diameters may be required in order to meet a user specific percentage of thread requirements.
- The 0.075 mm probable mean oversize hole condition is based on optimum cutting conditions. Probable percent of full thread may vary based on less ideal cutting conditions.
- The table and equations on this page are found in the *Machinery's Handbook*. Permission to simplify and print the equations is granted by the editor of the *Machinery's Handbook*.

Coolant Recommendations | Metric (mm)

HSS Drill Inserts

ISO	Material	Pressure or Flow Rate	9.5 mm - 12.5 mm	13 mm - 17 mm	18 mm - 24 mm	25 mm - 35 mm	36mm - 50 mm	51 mm - 76 mm	76 mm - 102 mm
P	**Free-Machining Steel**	BAR	12 - 13	7 - 8	7 - 10	6 - 8	5 - 7	4	5 - 6
	1118, 1215, 12L14, etc.	LPM	9.5 - 9.8	10.6 - 11.4	16.7 - 19.7	26.5 - 30.3	45.4 - 53.0	114 - 125	144 - 167
	Low-Carbon Steel	BAR	11 - 12	5 - 6	5 - 7	4 - 6	4 - 5	2 - 3	3 - 5
	1010, 1020, 1025, 1522, 1144, etc.	LPM	9.1 - 9.5	9.1 - 9.8	14.0 - 15.9	22.7 - 26.5	41.6 - 45.4	98 - 114	125 - 144
	Medium-Carbon Steel	BAR	11	5 - 6	5 - 6	4 - 5	3 - 5	2 - 3	3 - 5
	1030, 1040, 1050, 1527, 1140, 1151, etc.	LPM	8.7 - 9.1	8.7 - 9.8	13.6 - 15.5	18.9 - 22.7	37.9 - 45.4	98 - 114	125 - 144
	Alloy Steel	BAR	11	5	5 - 6	3 - 5	3 - 4	2	3
	4140, 5140, 8640, etc.	LPM	8.7 - 9.1	8.3 - 9.1	13.2 - 14.8	18.9 - 22.7	31.9 - 41.6	98 - 106	114 - 125
	High-Strength Alloy	BAR	10 - 11	4	3	2	2	1 - 2	2
	4340, 4330V, 300M, etc.	LPM	8.7 - 9.1	7.9 - 8.3	11.0 - 11.7	15.1 - 18.9	26.5 - 30.3	79 - 87	87 - 98
	Structural Steel	BAR	11	5 - 6	5 - 6	3 - 4	3	2	3
	A36, A285, A516, etc.	LPM	8.7 - 9.1	9.1 - 9.8	13.2 - 14.8	18.9 - 22.7	34.1 - 37.9	87 - 98	114 - 125
	Tool Steel	BAR	10 - 11	4	3	2	2	1 - 2	2
	H-13, H-21, A-4, 0-2, S-3, etc.	LPM	8.7 - 9.1	7.9 - 8.3	11.0 - 11.7	15.1 - 18.9	26.5 - 30.3	79 - 87	87 - 98
S	**High-Temp Alloy**	BAR	10 - 11	4 - 5	3 - 4	2	2	2	3
	Hastelloy B, Inconel 600, etc.	LPM	8.7 - 9.1	8.3 - 8.7	11.7 - 12.1	15.1 - 18.9	26.5 - 30.3	87 - 98	125
	Titanium Alloy	BAR	10 - 11	4 - 5	3 - 4	2	2	2	3
		LPM	8.7 - 9.1	8.3 - 8.7	11.7 - 12.1	15.1 - 18.9	26.5 - 30.3	87 - 98	125
	Aerospace Alloy	BAR	10 - 11	4 - 5	3 - 4	2	2	2	3
	S82	LPM	8.7 - 9.1	8.3 - 8.7	11.7 - 12.1	15.1 - 18.9	26.5 - 30.3	87 - 98	125
M	**Stainless Steel 400 Series**	BAR	11.8	5.9	5.2	3.8	3.5	2	3.1
	416, 420, etc.	LPM	9.5	9.8	14	23	38	98	117
	Stainless Steel 300 Series	BAR	11.8	5.9	5.2	3.8	3.5	2	3.1
	304, 316, 17-4PH, etc.	LPM	9.5	9.8	14	23	38	98	117
	Super Duplex Stainless Steel	BAR	11.8	5.9	5.2	3.8	3.5	2	3.1
		LPM	9.5	9.8	14	23	38	98	117
H	**Wear Plate**	BAR	10.7	4.2	3.5	2	2	1.7	2
	Hardox®, AR400, T-1, etc.	LPM	9.1	8.3	11.7	19	30	87	98
	Hardened Steel	BAR	10.7	4.2	3.5	2	2	1.7	2
		LPM	9.1	8.3	11.7	19	30	87	98
K	**SG / Nodular Cast Iron**	BAR	11	4.5	4.2	2.8	2.4	2	2.4
		LPM	9.1	8.7	12.5	19	34	98	106
	Grey / White Iron	BAR	11	4.5	4.2	2.8	2.4	2	2.4
		LPM	9.1	8.7	12.5	19	34	98	106
N	**Cast Aluminum**	BAR	14.5	12.4	15.8	11	8.6	3.5	5.5
		LPM	10	14	23	34	61	125	159
	Wrought Aluminum	BAR	14.5	12.4	15.8	11	8.6	3.5	5.5
		LPM	10	14	23	34	61	125	159
	Aluminum Bronze	BAR	12.8	8.3	9.65	7.95	6.9	3.5	6.2
		LPM	9.6	11.4	19.7	30.3	53	125	167
	Brass	BAR	11	4.5	4.2	2.8	2.4	2	2.4
		LPM	9.1	8.7	12.5	19	34	98	106
	Copper	BAR	12.8	8.3	9.65	7.95	6.9	3.5	6.2
		LPM	9.6	11.4	19.7	30.3	53	125	167

Deep Hole Drilling Coolant Adjustment

	⚠ Holder Length				
	Extended	**Long**	**Long Plus**	**XL**	**3XL**
Pressure and Flow	1.3	1.5	2	2	3

Recommended Coolant Example

If the recommended pressure and flow is 12 bar and 22 LPM for a standard length holder, then the adjusted pressure and flow for a 3XL holder would be 36 bar and 66 LPM.

12 • 3 = 36 bar	22 • 3 = 66 LPM

⚠ WARNING **Tool failure can cause serious injury. To prevent:**

- When using holders without support bushing, use a short T-A® holder to establish an initial hole that is a minimum of 2 diameters deep.
- Do not rotate tool holder more than 50 RPM unless it is engaged with the workpiece or fixture.

Visit **www.alliedmachine.com/DeepHoleGuidelines** for the most up-to-date information and procedures. Factory technical assistance is available for your specific applications through our Application Engineering Team.

IMPORTANT: The coolant pressure and flow rate recommendations above represent a good approximation to obtain optimum tool life and chip evacuation at Allied Machine recommended speeds and feeds. If lower coolant capabilities exist in a drilling application, the T-A® drilling system will still function at reduced penetration rates. Contact our Application Engineering department for a more specific recommendation of coolant requirements and/or speeds and feeds.

Coolant Recommendations | Metric (mm)

Carbide Drill Inserts

ISO	Material	Pressure or Flow Rate	9.5 mm - 12.5 mm	13 mm - 17 mm	18 mm - 24 mm	25 mm - 35 mm	36 mm - 47 mm
P	**Free-Machining Steel**	BAR	17 - 20	17	15	15	20
	1118, 1215, 12L14, etc.	LPM	12.2	16.3	25.2	41.5	71.9
	Low-Carbon Steel	BAR	18	11	11	12	9
	1010, 1020, 1025, 1522, 1144, etc.	LPM	11.4	13.3	20.6	36.5	62.0
	Medium-Carbon Steel	BAR	17	10	10	10	8
	1030, 1040, 1050, 1527, 1140, 1151, etc.	LPM	11.3	12.5	20.0	33.8	57.0
	Alloy Steel	BAR	17	9	10	8	7
	4140, 5140, 8640, etc.	LPM	11.1	12.3	19.3	30.0	55.8
	High-Strength Alloy	BAR	15	5	4	3	3
	4340, 4330V, 300M, etc.	LPM	10.4	9.1	12.6	18.8	33.6
	Structural Steel	BAR	16	9	8	7	5
	A36, A285, A516, etc.	LPM	10.8	12.0	17.5	27.8	47.1
	Tool Steel	BAR	15	5	5	3	3
	H-13, H-21, A-4, 0-2, S-3, etc.	LPM	10.4	9.1	13.6	19.7	36.5
S	**High-Temp Alloy**	BAR	17	11	12	11	9
	Hastelloy B, Inconel 600, etc.	LPM	11.1	13.5	21.9	35.4	62.0
	Titanium Alloy	BAR	17	11	12	11	9
		LPM	11.1	13.5	21.9	35.4	62.0
	Aerospace Alloy	BAR	17	11	12	11	9
	S82	LPM	11.1	13.5	21.9	35.4	62.0
M	**Stainless Steel 400 Series**	BAR	22.7	16.5	17.9	17.2	13.1
	416, 420, etc.	LPM	13	16.3	26.3	44.2	75
	Stainless Steel 300 Series	BAR	22.7	16.5	17.9	17.2	13.1
	304, 316, 17-4PH, etc.	LPM	13	16.3	26.3	44.2	75
	Super Duplex Stainless Steel	BAR	22.7	16.5	17.9	17.2	13.1
		LPM	13	16.3	26.3	44.2	75
H	**Wear Plate**	BAR	14.5	5.2	4.8	3.4	3.1
	Hardox®, AR400, T-1, etc.	LPM	10.4	9.1	13.6	19.7	36.5
	Hardened Steel	BAR	14.5	5.2	4.8	3.4	3.1
		LPM	10.4	9.1	13.6	19.7	36.5
K	**SG / Nodular Cast Iron**	BAR	15.5	7.2	6.2	6.2	5.5
		LPM	10.7	10.8	15.4	26.5	48.7
	Grey / White Iron	BAR	15.5	7.2	6.2	6.2	5.5
		LPM	10.7	10.8	15.4	26.5	48.7
N	**Cast Aluminum**	BAR	24.1	22	21.7	19.6	13.8
		LPM	13.4	18.8	29	47.2	77
	Wrought Aluminum	BAR	24.1	22	21.7	19.6	13.8
		LPM	13.4	18.8	29	47.2	77
	Aluminum Bronze	BAR	20	16.5	16.5	15.2	12
		LPM	12.2	16.3	25.2	41.5	71.9
	Brass	BAR	24.1	22	21.7	19.6	13.8
		LPM	13.4	18.8	29	47.2	77
	Copper	BAR	20	16.5	16.5	15.2	12
		LPM	12.2	16.3	25.2	41.5	71.9

Deep Hole Drilling Coolant Adjustment

	⚠ Holder Length				
	Extended	**Long**	**Long Plus**	**XL**	**3XL**
Pressure and Flow	1.3	1.5	2	2	3

Recommended Coolant Example

If the recommended pressure and flow is 12 bar and 22 LPM for a standard length holder, then the adjusted pressure and flow for a 3XL holder would be 36 bar and 66 LPM.

12 • 3 = 36 bar	22 • 3 = 66 LPM

⚠ WARNING **Tool failure can cause serious injury. To prevent:**

- When using holders without support bushing, use a short T-A® holder to establish an initial hole that is a minimum of 2 diameters deep.
- Do not rotate tool holder more than 50 RPM unless it is engaged with the workpiece or fixture.

Visit **www.alliedmachine.com/DeepHoleGuidelines** for the most up-to-date information and procedures. Factory technical assistance is available for your specific applications through our Application Engineering Team.

IMPORTANT: The coolant pressure and flow rate recommendations above represent a good approximation to obtain optimum tool life and chip evacuation at Allied Machine recommended speeds and feeds. If lower coolant capabilities exist in a drilling application, the T-A® drilling system will still function at reduced penetration rates. Contact our Application Engineering department for a more specific recommendation of coolant requirements and/or speeds and feeds.

Troubleshooting Guide

	Potential Problem																					
	Accelerated corner wear	Barber pole	Bell-mouth hole	Insert chipping	Blue chips	Built-up Edge (BUE)	Chatter	Chip packing	Chipping of point	Damaged or broken tools	Excessive margin wear	High flank wear	Hole lead off	Hole out of position	Hole out of round	Notching of insert	Oversize hole	Poor hole finish	Poor tool life	Power spikes - Load meter	Step burned on insert	
Setup Condition	1	2	3	4	5	6	7	8	9	10	11	12	13	14	15	16	17	18	19	20	21	**Possible Solutions**
⚠ Use of Standard, Standard Plus, Extended, Long, Long Plus, XL, and 3XL holders. See page 146 for Deep Hole Drilling guidelines.		2	3				7		9				13	14			17					• Start with short holder and drill a minimum depth equal to 2xD (see page A30: 146 for instructions). • Spot hole with stub tool of same or greater included angle as T-A® drill insert. • Decrease feed a minimum of 50% until establishing full diameter. • Use special holder with wear pads or chrome bearing area to work with drill bushings.
Starting on an inclined surface.		2					7		9	10	11		13		15							• Spot face surface to provide a flat entry surface. • Spot hole with stub tool of same or greater included angle as T-A® drill insert. • Decrease feed a minimum of 50% until establishing full diameter. • Use special holder with wear pads or chrome bearing area to work with drill bushings.
Worn or misaligned spindle (lathe, screw machine, chucker).	1	2	3				7		9	10	11		13				17	18				• Align spindle and turret or tailstock. • Repair spindle. • Spot hole with stub tool of same or greater included angle as T-A® drill insert.
Use of low rigidity machine tools (radial drills, multi-spindle drill press, etc.).		2	3	4			7		9	10			13	14								• Spot hole with stub tool of same or greater included angle as T-A® drill insert. • Reduce penetration rate to fall within the physical limits of the machine or setup (**NOTICE:** Do not reduce feed below threshold of good chip formation). • Use special holder with wear pads or chrome bearing area to work with drill bushings. • Use tougher tool steel grades with high wear-resistant coatings.
Poor workpiece support.		2		4			7			10	11				15			18				• Provide additional support for the workpiece. Reduce penetration rate to fall within the physical limits of the machine or setup (**NOTICE:** Do not reduce feed below threshold of good chip formation). • Use tougher tool steel grades with high wear-resistant coatings.
Flood coolant, low coolant pressure or low coolant volume.	1				5	6		8		10		12					17	18	19	20	21	• Run coolant through tool holder when drilling greater than one times diameter. • Increase coolant pressure and volume through the tool holder. • Reduce penetration rate to fall within the coolant limitations (**NOTICE:** Do not reduce feed below threshold of good chip formation). • Add a peck cycle to help clear chips.

⚠ WARNING **Tool failure can cause serious injury. To prevent:**
- When using holders without support bushing, use a short T-A® holder to establish an initial hole that is a minimum of 2 diameters deep.
- Do not rotate tool holder more than 50 RPM unless it is engaged with the workpiece or fixture.

Visit **www.alliedmachine.com/DeepHoleGuidelines** for the most up-to-date information and procedures. Factory technical assistance is available for your specific applications through our Application Engineering Team.

	Potential Problem																					
	Accelerated corner wear	Barber pole	Bell-mouth hole	Insert chipping	Blue chips	Built-up Edge (BUE)	Chatter	Chip packing	Chipping of point	Damaged or broken tools	Excessive margin wear	High flank wear	Hole lead off	Hole out of position	Hole out of round	Notching of insert	Oversize hole	Poor hole finish	Poor tool life	Power spikes - Load meter	Step burned on insert	
Setup Condition	1	2	3	4	5	6	7	8	9	10	11	12	13	14	15	16	17	18	19	20	21	**Possible Solutions**
Interrupted cuts. Entry or exit surfaces that are not perpendicular to the spindle (draft angles, stepped surfaces, cross holes, and cast or forged surfaces).				4			7		9	10	11		13	14	15		17	18	19			• Premill (spot face) entry or exit surface to remove interruption. • Spot hole with stub tool of same or greater included angle as T-A® drill insert. • Decrease feed as much as 50% through entry or exit interruption. • Use short holders in low impact entry cuts.
Material harder than expected or running tools beyond recommended speeds.	1				5	6				10		12							19		21	• Reduce speed if a step is worn in the insert, calculate SFM at the worn diameter. Reduce this value by 10% and apply this new value to the original tool diameter. • Increase coolant pressure and volume. • Improve coolant condition by use of quality products and regular maintenance. • Select an insert grade (premium, super cobalt, or carbide) or coating (TiAlN, TiCN, or AM200®) that is more wear- and heat-resistant.
Poor material micro-structure or foreign particles (forgings and castings that have not been normalized or annealed, poorly prepared steel, flame cut parts and sand casting).				4		6				10		12	13			16			19			• Compare performance of other tools for similar wear problems, which may indicate poor micro-structure. Anneal or normalize parts to improve micro-structure for machining. • To improve tool life in materials with poor micro-structure, try carbide grades. • For hard spots or inclusions, use the tougher insert steel grade with high wear-resistant coatings (TiAlN, TiCN, AM200®). • Reduce feeds (**NOTICE:** Do not reduce feed below threshold of good chip formation).
Poor chip control.								8		10	11		13				17	18	19	20		• Increase feed to recommended levels. Contact Allied's Application Engineering team for technical recommendations. • Increase coolant pressure and volume. • Improve coolant condition by use of quality products and regular maintenance. • See pages A30: 4 - 5 for special purpose geometries.
Spot drilled holes with included angle less than that matching T-A® or cored holes.	1			4			7						13			16			19			• Spot hole with short tool of same or greater included angle as T-A® drill insert. • Reduce feed (**NOTICE:** Do not reduce feed below threshold of good chip formation) • If possible, drill from solid.
Use of high wear-resistant insert grades.				4						10												• Use tougher grade of T-A® (from carbide to cobalt to HSS). See wear versus toughness chart on page A30: 9. • Increase rigidity of setup.

Deep Hole Drilling Guidelines

For Lengths Greater Than 9xD (including Standard Plus, Extended Length, Long Length, Long Plus Length, XL, 3XL, and Special Length)

1. Pilot Hole
100 % RPM
100% IPR (mm/rev)

Establish the pilot hole using the same diameter short drill to a depth of 2xD minimum.
Utilize a pilot drill with the same or larger included point angle.

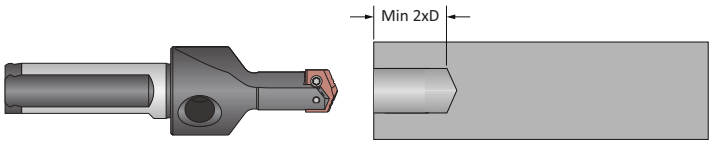

Coolant ON

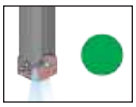

2. Feed-in
50 RPM max
12 IPM (300 mm/min)

Feed the longer drill within 1/16" (1.5 mm) short of the established pilot hole bottom at a **maximum of 50 RPM** and 12 IPM (300 mm/min) feed rate.

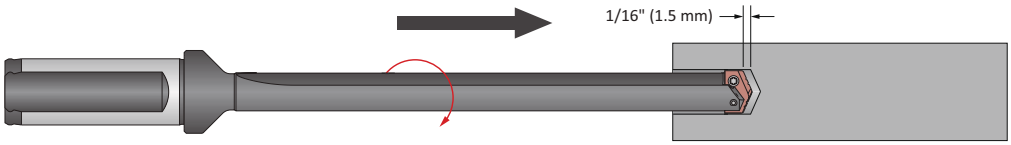

Coolant OFF

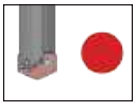

3. Deep Hole Transition Drilling
50 % RPM
75% IPR (mm/rev)

Drill additional 1xD past the bottom of the pilot hole at 50% reduction of recommended speed and 25% reduction of recommended feed.
Mimimum of 1 second dwell is required to meet full speed before feeding.

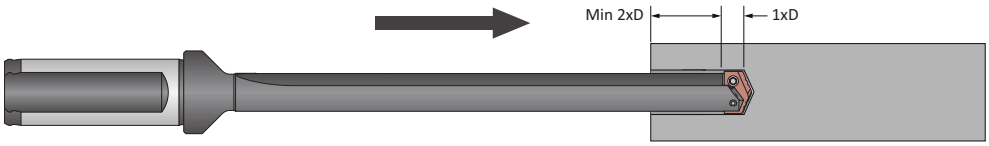

Coolant ON

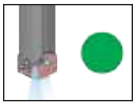

4. Deep Hole Drilling - Blind
100% RPM
100% IPR (mm/rev)

Drill to full depth at recommended speed and feed for longer drill according to Allied speed and feed charts.
No peck cycle recommended.

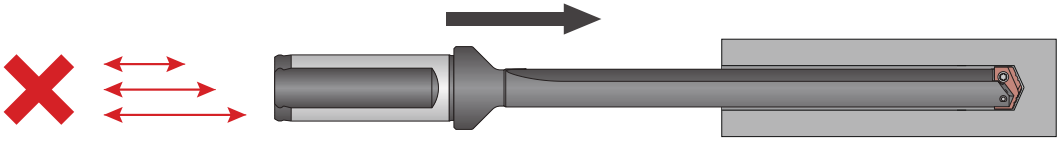

Coolant ON

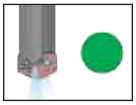

5. Deep Hole Drilling - at Breakout
50% RPM
75% IPR (mm/rev)

For through holes only:
Reduce speed by 50% and feed by 25% prior to breakout.
Do not break out more than 1/8" (3 mm) past the full diameter of the drill.

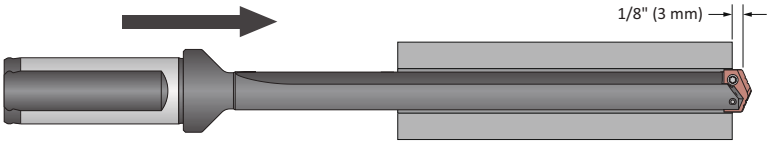

Coolant ON

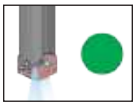

6. Drill Retract
50 RPM max

Reduce speed to a **maximum of 50 RPM** before retracting from the hole.

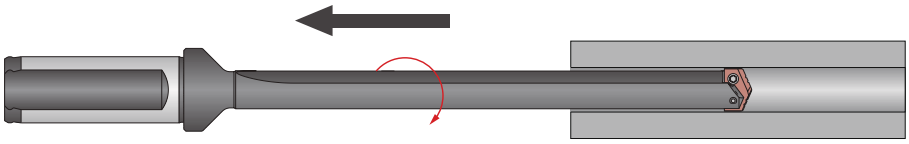

Coolant OFF

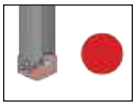

⚠ WARNING **Tool failure can cause serious injury. To prevent:**
- When using holders without support bushing, use a short T-A® holder to establish an initial hole that is a minimum of 2 diameters deep.
- Do not rotate tool holder more than 50 RPM unless it is engaged with the workpiece or fixture.

Visit **www.alliedmachine.com/DeepHoleGuidelines** for the most up-to-date information and procedures. Factory technical assistance is available for your specific applications through our Application Engineering Team.

Notes

SECTION

A40

High Performance / Universal

High Performance and Universal

Replaceable Spade Drill Insert Drilling System

- **Diameter Range:** 0.9688" - 8.5000"

Since the Beginning

The Universal spade drill is the original design that launched Allied Machine into the holemaking industry. After the T-A® was introduced, customers who already owned the Universal style holders wanted the same benefits offered by the T-A without having to invest in an entirely new system.

The High Performance (HP) insert was created to provide similar performance as the T-A. The HP insert (along with an adapter for larger sizes) fits into existing Universal style holders.

When the customers speak, we listen.

Applicable Industries

Aerospace | Agriculture | Automotive | Energy | Firearms | General Machining | Oil & Gas

Your safety and the safety of others is very important. This catalog contains important safety messages. Always read and follow all safety precautions.

This triangle is a safety hazard symbol. It alerts you to potential safety hazards that can cause tool failure and serious injury.

When you see this symbol in the catalog, look for a related safety message that may be near this triangle or referred to in the nearby text.

There are safety signal words also used in the catalog. Safety messages follow these words.

WARNING

WARNING (shown above) means that failure to follow the precautions in this message could result in tool failure and serious injury.

NOTICE means that failure to follow the precautions in this message could result in damage to the tool or machine but not result in personal injury.

NOTE and **IMPORTANT** are also used. These are important that you read and follow but are not safety-related.

Visit www.alliedmachine.com for the most up-to-date information and procedures.

Reference Icons
The following icons will appear throughout the catalog to help you navigate between products.

High Performance / Universal Inserts
Refers to the range of inserts that connect with the corresponding holders

Universal Insert Coating Options
Details and overview of the different coatings available for Universal spade drill inserts

Insert Adapter Information
Detailed information regarding the corresponding adapter item

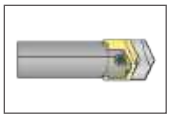

High Performance / Universal Holders
Refers to the range of holders that connect with the corresponding inserts

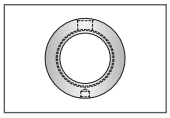

Rotary Coolant Adapter (RCA) Information
Detailed instructions and information regarding the corresponding RCA part

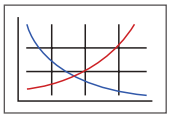

Recommended Cutting Data
Speed and feed recommendations for optimum and safe drilling

Series	Diameter Range - Imperial (in)
A	0.9688 - 1.2500
B	1.2500 - 1.7500
C	1.5000 - 2.3750
D	2.0000 - 2.8750
E	2.5000 - 3.3750
F	3.0000 - 3.8750
G	3.5000 - 4.5000
H^1 - H^2	4.0000 - 5.0000
H^3 - H^9	5.1250 - 8.5000

High Performance / Universal Drilling System Contents

Introduction Information

System Overview . . . . . 2 - 3
Product Nomenclature . . . . . 4 - 5

Drill Series

A Series . . . . . 6 - 7
B Series . . . . . 8 - 9
C Series . . . . . 10 - 13
D Series . . . . . 14 - 15
E Series . . . . . 16 - 17
F Series . . . . . 18 - 19
G Series . . . . . 20 - 21
H Series . . . . . 22 - 24

Accessories

Adapters 25
Blade-Loc Screws & Pipe Plugs 26
Rotary Coolant Adapters (RCA) 27

Recommended Cutting Data

Regrind Charts . . . . . 28 - 29
High Performance Inserts . . . . . 30 - 31
Universal Inserts . . . . . 32 - 33
Deep Hole Drilling Guidelines 34

System Overview | Inserts

High Performance Inserts

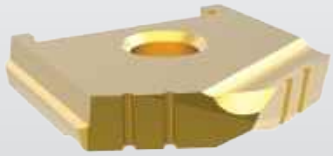

A - C Series

High Performance Inserts

- Increase production 100 - 500% compared to uncoated Universal spade drill inserts.
- Fit into Universal style holders.
- Available in TiN and TiAlN coatings.
- Single-piece design (A - C series) eliminates the need for adapters, which maximizes tool performance in these smaller sizes.

Universal Inserts

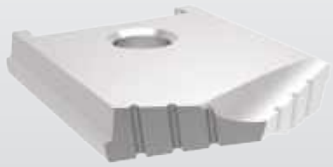

130° CPM-M4

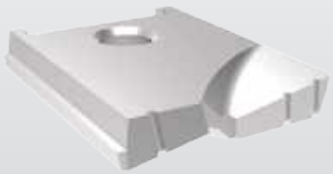

Flat Bottom

90° Spot and Chamfer

Universal Inserts

- Standard inserts stocked uncoated.
- Also available in TiN, TiAlN, and TiCN coatings, which improve tool life when compared to uncoated inserts.

TiN Coating	
Ordering Code: T	Example: 10224-0116**T**

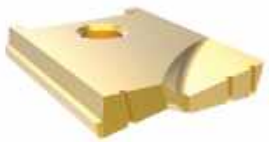

TiAlN Coating	
Ordering Code: A	Example: 10224-0116**A**

TiCN Coating	
Ordering Code: N	Example: 10224-0116**N**

System Overview | Holders

Straight Shank Holders

- Stub (#125)
- Short (#150)
- Short (#100)
- Standard (#200)
- Long (#250)

Taper Shank Holders

- Short (#300)
- Short (#300 TSC)
- Short (#400 SR)
- Standard (#500 SR)
- Long (#600 SR)
- XL (#700 SR)

Adapter
for High Performance D - H series inserts only.

*For detailed information and setup for adapters and Blade-Loc screw assembly, see page A40: 25 - 26.

Product Nomenclature

High Performance Spade Drill Inserts

1	02	8	T	–	0406
1	2	3	4		5

1. Spade Drill Insert	2. Material	3. Series	4. Coating	5. Diameter (by 1/32")
1 = Spade drill insert	**02** = High-speed steel	**1** = A series **2** = B series **3** = C series	**T** = TiN **A** = TiAlN **N** = TiCN	**0406** = Inch **4.3593** = Decimal

Universal Spade Drill Inserts

1	02	8	4	–	0406	T
1	2	3	4		5	6

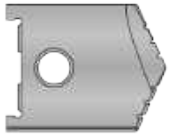

1. Spade Drill Insert	2. Insert Style	3. Series	4. Material
1 = Spade drill insert	**02** = 130° Spade **04** = Flat Bottom **12** = 90° Spot and Chamfer	**4** = D series **5** = E series **6** = F series **7** = G series **8** = H1 - H2 series **9** = H3 - H9 series	**4** = High-speed steel (SPM-M4 HSS)

5. Diameter (by 1/32”)	6. Coating
0406 = Inch **4.3593** = Decimal	**Blank** = Uncoated **T** = TiN **A** = TiAlN **N** = TiCN

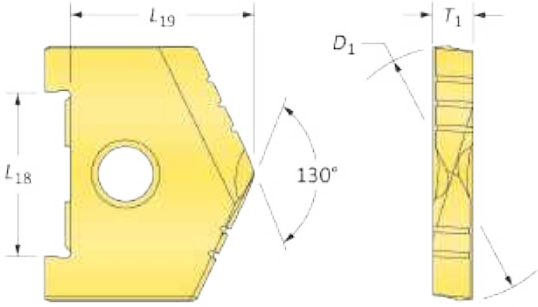

Reference Key

Symbol	Attribute
D_1	Insert diameter
L_{18}	Holder locating area
L_{19}	Reference length
T_1	Thickness

Product Nomenclature

High Performance / Universal Spade Drill Insert Holders

2	22	8	1	–	0006
1	2	3	4		5

1. Holder
2 = Drill holder

2. Classification	
Straight Shank	**Taper Shank**
02 = Stub #125 (NC)	**14** = Short #300 (NC)
04 = Short #150 (NC)	**15** = Short #300 (TSC)
06 = Short #100 (C)	**16** = Short #400 SR (RCA)
08 = Standard #200 (C)	**18** = Standard #500 SR (RCA)
10 = Long #250 (C)	**20** = Long #600 SR (RCA)
	22 = XL #700 SR SR (RCA)

C = Coolant | NC = No Coolant | TSC = Through Shank Coolant | RCA = Rotary Coolant Adapter

3. Series
1 = A series
2 = B series
3 = C series
4 = D series
5 = E series
6 = F series
7 = G series
8 = H series

4. Holder Style
1 = Universal

5. Shank Size and Configuration	
Straight Shank	**Taper Shank**
0750 = 0.750" Straight Shank	**0002** = #2 Morse Taper Shank
1000 = 1.000" Straight Shank	**0003** = #3 Morse Taper Shank
1250 = 1.250" Straight Shank	**0004** = #4 Morse Taper Shank
1500 = 1.500" Straight Shank	**0005** = #5 Morse Taper Shank
2000 = 2.000" Straight Shank	**0006** = #6 Morse Taper Shank
3000 = 3.000" Straight Shank	

Reference Key

Symbol	Attribute
D_1	Insert diameter
D_2	Shank diameter
L_1	Overall length
L_{3HP}	Reference length (High Performance)
L_{3U}	Reference length (Universal)
L_4	Flute length
L_7	Shank length
P_1	Pipe tap

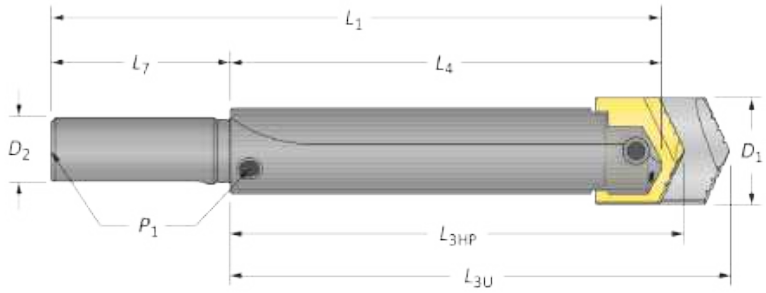

High Performance and Universal Spade Drill Inserts

A Series | Diameter Range: 0.9688" - 1.3750"

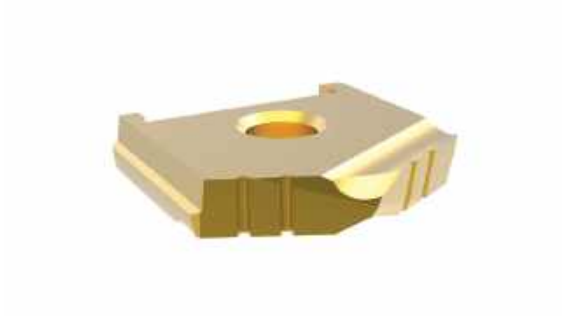

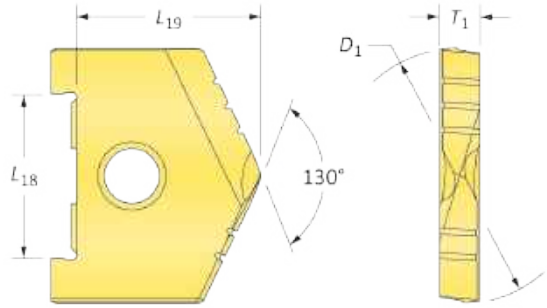

High Performance Spade Drill Inserts

Series	D_1 inch Fraction	D_1 inch Decimal	Inserts L_{18}	Inserts L_{19}	Inserts T_1	TiN Part No.	TiAlN Part No.	TiCN Part No.
A	31/32	0.9688	3/4	7/8	3/16	**1021T-0031**	**1021A-0031**	**1021N-0031**
	1	1.0000	3/4	7/8	3/16	**1021T-0100**	**1021A-0100**	**1021N-0100**
	1-1/32	1.0313	3/4	7/8	3/16	**1021T-0101**	**1021A-0101**	**1021N-0101**
	1-1/16	1.0625	3/4	7/8	3/16	**1021T-0102**	**1021A-0102**	**1021N-0102**
	1-3/32	1.0938	3/4	7/8	3/16	**1021T-0103**	**1021A-0103**	**1021N-0103**
	1-1/8	1.1250	3/4	7/8	3/16	**1021T-0104**	**1021A-0104**	**1021N-0104**
	1-5/32	1.1563	3/4	7/8	3/16	**1021T-0105**	**1021A-0105**	**1021N-0105**
	1-3/16	1.1875	3/4	7/8	3/16	**1021T-0106**	**1021A-0106**	**1021N-0106**
	1-7/32	1.2188	3/4	7/8	3/16	**1021T-0107**	**1021A-0107**	**1021N-0107**
	1-1/4	1.2500	3/4	7/8	3/16	**1021T-0108**	**1021A-0108**	**1021N-0108**
A Oversize	1-9/32	1.2813	3/4	7/8	3/16	**1021T-0109**	**1021A-0109**	**1021N-0109**
	1-5/16	1.3125	3/4	7/8	3/16	**1021T-0110**	**1021A-0110**	**1021N-0110**
	1-11/32	1.3438	3/4	7/8	3/16	**1021T-0111**	**1021A-0111**	**1021N-0111**
	1-3/8	1.3750	3/4	7/8	3/16	**1021T-0112**	**1021A-0112**	**1021N-0112**

Inserts sold in multiples of 1.

Flat Bottom

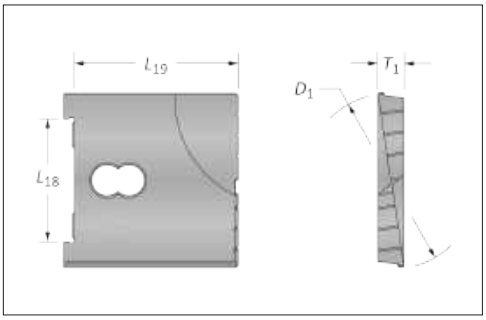

90° Spot & Chamfer

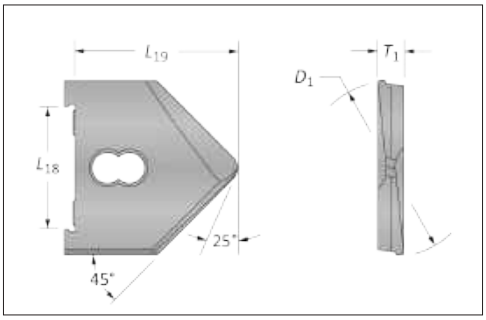

Universal Spade Drill Inserts

Series	D_1 inch Fraction	D_1 inch Decimal	Inserts L_{18}	Inserts L_{19}	Inserts T_1	Flat Bottom	90° Spot & Chamfer
A	1	1.0000	3/4	1-5/32	3/16	**10414-0100**	—
	1-1/16	1.0625	3/4	1-5/32	3/16	**10414-0102**	—
	1-1/8	1.1250	3/4	1-5/32	3/16	**10414-0104**	—
	1-3/16	1.1875	3/4	1-5/32	3/16	**10414-0106**	—
	1-1/4	1.2500	3/4	1-5/32	3/16	**10414-0108**	**11214-0108**

Inserts sold in multiples of 1.

A40: 30 - 33

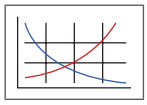

Key on A40: 1

A40: 7

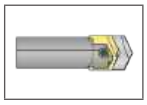

Sizes not shown are available upon request.
When ordering, please follow the example below:

Inch:	1-3/64", High Performance (A series), TiN = use Part No. **1021T-1.0469**
Decimal:	1.2125", High Performance (A series), TiN = use Part No. **1021T-1.2125**

High Performance / Universal Spade Drill Insert Holders

A Series

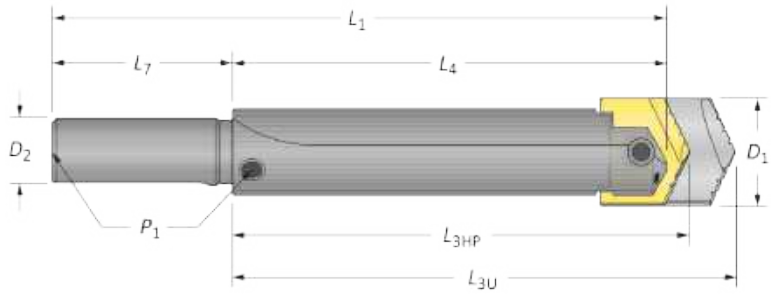

Straight Shank

	Length	D_1	Holder L_{3HP}	L_{3U}	L_4	L_1	Shank D_2	L_7	P_1	Style	Part No.
	Short	0.9688 - 1.3750	3.250	3.531	3.000	6.500	3/4	3.500	—	#150	**20411-0750**
	Short	0.9688 - 1.3750	3.250	3.531	3.000	6.500	1	3.500	—	#150	**20411-1000**
	Short	0.9688 - 1.3750	3.250	3.531	3.000	6.500	1	3.500	1/8 NPT	#100	**20611-1000**
	Short	0.9688 - 1.3750	3.250	3.531	3.000	6.500	1-1/2	3.500	1/8 NPT	#100	**20611-1500**
	Standard	0.9688 - 1.3750	8.000	8.281	7.750	11.250	3/4	3.500	1/8 NPT	#200	**20811-0750**
	Standard	0.9688 - 1.3750	8.000	8.281	7.750	11.250	1	3.500	1/8 NPT	#200	**20811-1000**
	Standard	0.9688 - 1.3750	8.000	8.281	7.750	11.250	1-1/2	3.500	1/8 NPT	#200	**20811-1500**
	Long	0.9688 - 1.3750	15.250	15.531	15.000	18.500	1	3.500	1/8 NPT	#250	⚠ **21011-1000**

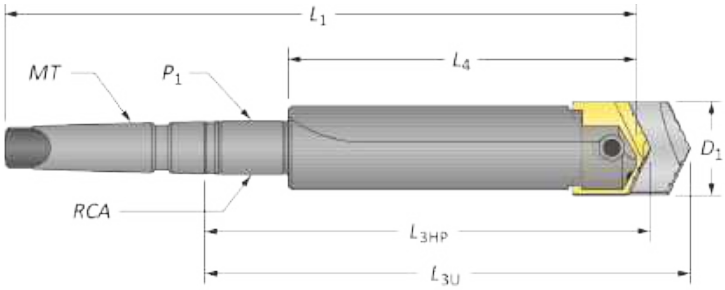

Taper Shank

	Length	D_1	Holder L_{3HP}	L_{3U}	L_4	L_1	Shank MT	P_1	RCA	Style	Part No.
	Short	0.9688 - 1.3750	3.437	3.719	3.000	6.875	#3 MT	—	—	#300	**21411-0003**
	Short	0.9688 - 1.3750	3.500	3.719	3.000	7.875	#4 MT	—	—	#300	**21411-0004**
	Short	0.9688 - 1.3750	3.437	3.719	3.000	6.875	#3 MT	—	—	#300 TSC	**21511-0003***
	Short	0.9688 - 1.3750	5.188	5.469	3.000	9.563	#4 MT	1/4 NPT	2T-4SR	#400 SR	**21611-0004**
	Standard	0.9688 - 1.3750	9.938	10.219	7.750	14.313	#4 MT	1/4 NPT	2T-4SR	#500 SR	**21811-0004**
	Long	0.9688 - 1.3750	17.188	17.469	15.000	21.563	#4 MT	1/4 NPT	2T-4SR	#600 SR	⚠ **22011-0004**
	XL	0.9688 - 1.3750	23.188	23.469	21.000	27.563	#4 MT	1/4 NPT	2T-4SR	#700 SR	⚠ **22211-0004**

*Through shank coolant, coolant inlet diameter = 1/4".

Rotary Coolant Adapter (RCA) and Accessories

	ID	OD	L_1	Driving Rod Thread	P_1	Part No.*	RCA O-Rings Kit Part No.**	Replacements
	1.250	2.500	1.375	3/8" - 16	1/4 NPT	⚠ **2T-4SR**	2T1-4SR	2T1-4OR-10

*RCA comes complete with (1) RCA, (2) O-rings, (2) snap rings, and (2) thrust washers.
**RCA Repair Kit includes (2) O-rings, (2) snap rings, and (2) thrust washers.
⚠ Refer to page A40: 27 for proper RCA assembly and safety information.

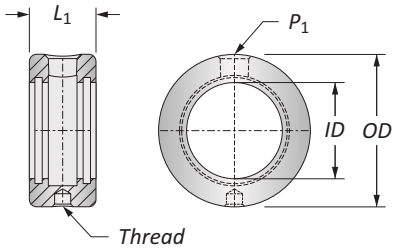

Connection Accessories

Clamping Screw Part No.	Clamping Screw Key	Blade-Loc Screw Part No.	Blade-Loc Screw Key	Pipe Plug Straight Shank Part No.	Pipe Plug Straight Shank Key	Pipe Plug MT Shank (with RCA) Part No.	Pipe Plug MT Shank (with RCA) Key
772074-1	5/64"	—	—	**710004-1**	5/32"	**710006-1**	7/32"

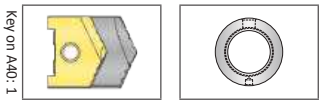

ⓘ = Imperial (in)
ⓜ = Metric (mm)
O-rings sold in packs of 10.

⚠ **WARNING** Refer to Speed and Feed charts for recommended adjustments to speeds and feeds. Refer to page A40: 34 for deep hole drilling guidelines in this section of the catalog. Visit **www.alliedmachine.com/DeepHoleGuidelines** for the most up-to-date information and procedures. Factory technical assistance is available for your specific applications through our Application Engineering Team.

A DRILLING
B BORING
C REAMING
D BURNISHING
E THREADING
X SPECIALS

High Performance and Universal Spade Drill Inserts

B Series | Diameter Range: 1.2500" - 1.7500"

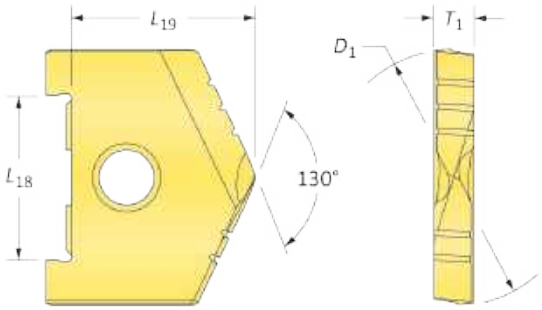

High Performance Spade Drill Inserts

Series	D_1 inch Fraction	D_1 inch Decimal	Insert L_{18}	Insert L_{19}	Insert T_1	TiN Part No.	TiAlN Part No.	TiCN Part No.
B	1-1/4	1.2500	1-1/16	1-3/32	9/32	**1022T-0108**	**1022A-0108**	**1022N-0108**
	1-9/32	1.2813	1-1/16	1-3/32	9/32	**1022T-0109**	**1022A-0109**	**1022N-0109**
	1-5/16	1.3125	1-1/16	1-3/32	9/32	**1022T-0110**	**1022A-0110**	**1022N-0110**
	1-11/32	1.3438	1-1/16	1-3/32	9/32	**1022T-0111**	**1022A-0111**	**1022N-0111**
	1-3/8	1.3750	1-1/16	1-3/32	9/32	**1022T-0112**	**1022A-0112**	**1022N-0112**
	1-13/32	1.4063	1-1/16	1-3/32	9/32	**1022T-0113**	**1022A-0113**	**1022N-0113**
	1-7/16	1.4375	1-1/16	1-3/32	9/32	**1022T-0114**	**1022A-0114**	**1022N-0114**
	1-15/32	1.4688	1-1/16	1-3/32	9/32	**1022T-0115**	**1022A-0115**	**1022N-0115**
	1-1/2	1.5000	1-1/16	1-3/32	9/32	**1022T-0116**	**1022A-0116**	**1022N-0116**
B Oversize	1-17/32	1.5313	1-1/16	1-3/32	9/32	**1022T-0117**	**1022A-0117**	**1022N-0117**
	1-9/16	1.5625	1-1/16	1-3/32	9/32	**1022T-0118**	**1022A-0118**	**1022N-0118**
	1-19/32	1.5938	1-1/16	1-3/32	9/32	**1022T-0119**	**1022A-0119**	**1022N-0119**
	1-5/8	1.6250	1-1/16	1-3/32	9/32	**1022T-0120**	**1022A-0120**	**1022N-0120**
	1-21/32	1.6563	1-1/16	1-3/32	9/32	**1022T-0121**	**1022A-0121**	**1022N-0121**
	1-11/16	1.6875	1-1/16	1-3/32	9/32	**1022T-0122**	**1022A-0122**	**1022N-0122**
	1-23/32	1.7188	1-1/16	1-3/32	9/32	**1022T-0123**	**1022A-0123**	**1022N-0123**
	1-3/4	1.7500	1-1/16	1-3/32	9/32	**1022T-0124**	**1022A-0124**	**1022N-0124**

Inserts sold in multiples of 1.

Flat Bottom

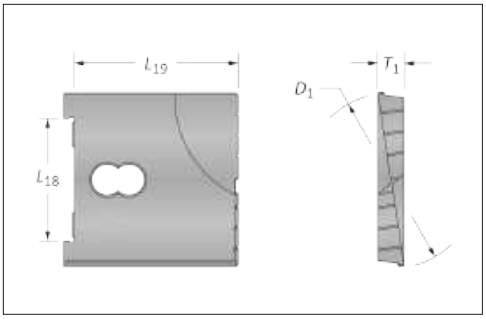

90° Spot & Chamfer

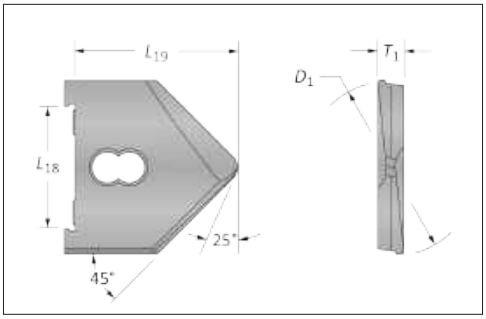

Universal Spade Drill Inserts

Series	D_1 inch Fraction	D_1 inch Decimal	Insert L_{18}	Insert L_{19}	Insert T_1	Flat Bottom	90° Spot & Chamfer
B	1-1/4	1.2500	1-1/16	1-13/32	9/32	**10424-0108**	—
	1-5/16	1.3125	1-1/16	1-13/32	9/32	**10424-0110**	—
	1-3/8	1.3750	1-1/16	1-13/32	9/32	**10424-0112**	—
	1-7/16	1.4375	1-1/16	1-13/32	9/32	**10424-0114**	—
	1-1/2	1.5000	1-1/16	1-13/32	9/32	**10424-0116**	**11224-0116**

Inserts sold in multiples of 1.

A40: 30 - 33

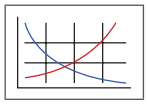

Key on A40: 1

A40: 9

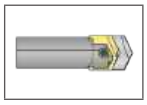

Sizes not shown are available upon request.
When ordering, please follow the example below:

Inch:	1-21/64", High Performance (B series), TiN = use Part No. **1022T-1.3281**
Decimal:	1.4500", High Performance (B series), TiN = use Part No. **1022T-1.4500**

High Performance / Universal Spade Drill Insert Holders

B Series

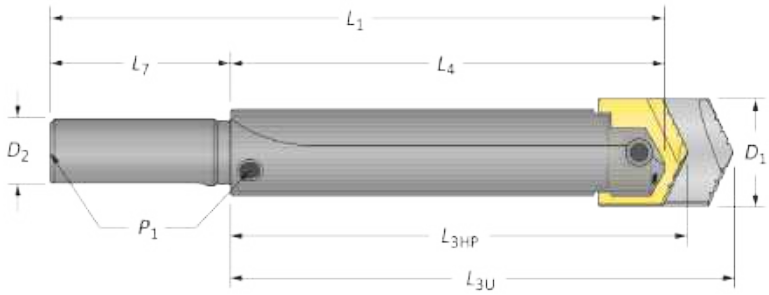

Straight Shank

	Length	D_1 Range	Holder L_{3HP}	L_{3U}	L_4	L_1	Shank D_2	L_7	P_1	Style	Part No.
	Short	1.2500 - 1.7500	3.781	4.094	3.500	7.000	1	3.500	—	#150	**20421-1000**
	Short	1.2500 - 1.7500	3.781	4.094	3.500	7.000	1	3.500	1/4 NPT	#100	**20621-1000**
	Short	1.2500 - 1.7500	3.781	4.094	3.500	7.000	1-1/4	3.500	1/4 NPT	#100	**20621-1250**
ⓘ	Short	1.2500 - 1.7500	3.781	4.094	3.500	7.000	1-1/2	3.500	1/4 NPT	#100	**20621-1500**
	Standard	1.2500 - 1.7500	8.406	8.719	8.125	11.625	1	3.500	1/4 NPT	#200	**20821-1000**
	Standard	1.2500 - 1.7500	8.406	8.719	8.125	11.625	1-1/4	3.500	1/4 NPT	#200	**20821-1250**
	Standard	1.2500 - 1.7500	8.406	8.719	8.125	11.625	1-1/2	3.500	1/4 NPT	#200	**20821-1500**
	Long	1.2500 - 1.7500	15.281	15.594	15.000	18.500	1-1/4	3.500	1/4 NPT	#250	⚠ **21021-1250**

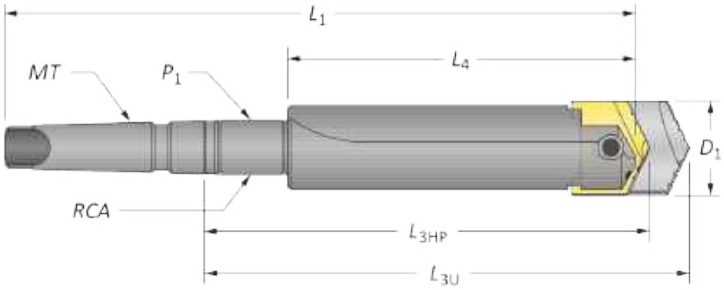

Taper Shank

	Length	D_1 Range	Holder L_{3HP}	L_{3U}	L_4	L_1	Shank MT	P_1	RCA	Style	Part No.
	Short	1.2500 - 1.7500	3.969	4.281	3.500	7.375	#3 MT	—	—	#300	**21421-0003**
	Short	1.2500 - 1.7500	4.031	4.344	3.500	8.375	#4 MT	—	—	#300	**21421-0004**
	Short	1.2500 - 1.7500	4.031	4.344	3.500	8.375	#4 MT	—	—	#300 TSC	**21521-0004***
ⓘ	Short	1.2500 - 1.7500	5.719	6.031	3.500	10.063	#4 MT	1/4 NPT	2T-4SR	#400 SR	**21621-0004**
	Standard	1.2500 - 1.7500	10.344	10.656	8.125	14.688	#4 MT	1/4 NPT	2T-4SR	#500 SR	**21821-0004**
	Long	1.2500 - 1.7500	17.219	17.531	15.000	21.563	#4 MT	1/4 NPT	2T-4SR	#600 SR	⚠ **22021-0004**
	XL	1.2500 - 1.7500	24.219	24.531	22.000	28.563	#4 MT	1/4 NPT	2T-4SR	#700 SR	⚠ **22221-0004**

*Through shank coolant, coolant inlet diameter = 5/16".

Rotary Coolant Adapter (RCA) and Accessories

	ID	OD	L_1	Driving Rod Thread	P_1	Part No.*	RCA O-Rings Kit Part No.**	Replacements
ⓘ	1.250	2.500	1.375	3/8" - 16	1/4 NPT	⚠ **2T-4SR**	2T1-4SR	2T1-4OR-10
	1.750	3.000	1.375	3/8" - 16	1/4 NPT	⚠ **2T-5SR**	2T1-5SR	2T1-5OR-10

*RCA comes complete with (1) RCA, (2) O-rings, (2) snap rings, and (2) thrust washers.
**RCA Repair Kit includes (2) O-rings, (2) snap rings, and (2) thrust washers.
⚠ Refer to page A40: 27 for proper RCA assembly and safety information.

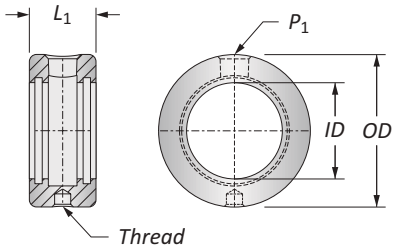

Connection Accessories

Clamping Screw Part No.	Clamping Screw Key	Blade-Loc Screw Part No.	Blade-Loc Screw Key	Pipe Plug Straight Shank Part No.	Straight Shank Key	MT Shank (with RCA) Part No.	MT Shank Key
772098-1	3/16"	—	—	**710006-1**	7/32"	**710006-1**	7/32"

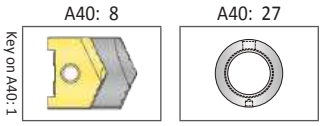

ⓘ = Imperial (in)
ⓜ = Metric (mm)
O-rings sold in packs of 10.

⚠ **WARNING** Refer to Speed and Feed charts for recommended adjustments to speeds and feeds. Refer to page A40: 34 for deep hole drilling guidelines in this section of the catalog. Visit **www.alliedmachine.com/DeepHoleGuidelines** for the most up-to-date information and procedures. Factory technical assistance is available for your specific applications through our Application Engineering Team.

High Performance Spade Drill Inserts

C Series | Diameter Range: 1.5000" - 2.3750"

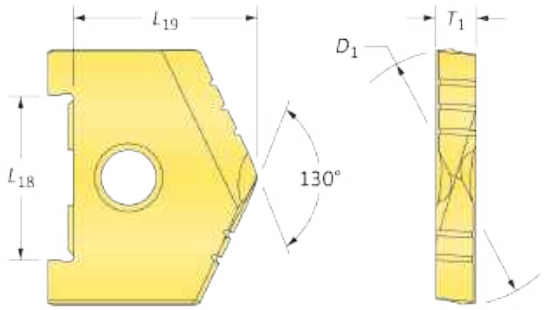

Series	D_1 inch Fraction	D_1 inch Decimal	Insert L_{18}	Insert L_{19}	Insert T_1	TiN Part No.	TiAlN Part No.	TiCN Part No.
C	1-1/2	1.5000	1-1/4	1-19/64	5/16	**1023T-0116**	**1023A-0116**	**1023N-0116**
	1-17/32	1.5313	1-1/4	1-19/64	5/16	**1023T-0117**	**1023A-0117**	**1023N-0117**
	1-9/16	1.5625	1-1/4	1-19/64	5/16	**1023T-0118**	**1023A-0118**	**1023N-0118**
	1-19/32	1.5938	1-1/4	1-19/64	5/16	**1023T-0119**	**1023A-0119**	**1023N-0119**
	1-5/8	1.6250	1-1/4	1-19/64	5/16	**1023T-0120**	**1023A-0120**	**1023N-0120**
	1-21/32	1.6563	1-1/4	1-19/64	5/16	**1023T-0121**	**1023A-0121**	**1023N-0121**
	1-11/16	1.6875	1-1/4	1-19/64	5/16	**1023T-0122**	**1023A-0122**	**1023N-0122**
	1-23/32	1.7188	1-1/4	1-19/64	5/16	**1023T-0123**	**1023A-0123**	**1023N-0123**
	1-3/4	1.7500	1-1/4	1-19/64	5/16	**1023T-0124**	**1023A-0124**	**1023N-0124**
	1-25/32	1.7813	1-1/4	1-19/64	5/16	**1023T-0125**	**1023A-0125**	**1023N-0125**
	1-13/16	1.8125	1-1/4	1-19/64	5/16	**1023T-0126**	**1023A-0126**	**1023N-0126**
	1-27/32	1.8438	1-1/4	1-19/64	5/16	**1023T-0127**	**1023A-0127**	**1023N-0127**
	1-7/8	1.8750	1-1/4	1-19/64	5/16	**1023T-0128**	**1023A-0128**	**1023N-0128**
	1-29/32	1.9063	1-1/4	1-19/64	5/16	**1023T-0129**	**1023A-0129**	**1023N-0129**
	1-15/16	1.9375	1-1/4	1-19/64	5/16	**1023T-0130**	**1023A-0130**	**1023N-0130**
	1-31/32	1.9688	1-1/4	1-19/64	5/16	**1023T-0131**	**1023A-0131**	**1023N-0131**
	2	2.0000	1-1/4	1-19/64	5/16	**1023T-0200**	**1023A-0200**	**1023N-0200**
C Oversize	2-1/32	2.0313	1-1/4	1-19/64	5/16	**1023T-0201**	**1023A-0201**	**1023N-0201**
	2-1/16	2.0625	1-1/4	1-19/64	5/16	**1023T-0202**	**1023A-0202**	**1023N-0202**
	2-3/32	2.0938	1-1/4	1-19/64	5/16	**1023T-0203**	**1023A-0203**	**1023N-0203**
	2-1/8	2.1250	1-1/4	1-19/64	5/16	**1023T-0204**	**1023A-0204**	**1023N-0204**
	2-5/32	2.1563	1-1/4	1-19/64	5/16	**1023T-0205**	**1023A-0205**	**1023N-0205**
	2-3/16	2.1875	1-1/4	1-19/64	5/16	**1023T-0206**	**1023A-0206**	**1023N-0206**
	2-7/32	2.2188	1-1/4	1-19/64	5/16	**1023T-0207**	**1023A-0207**	**1023N-0207**
	2-1/4	2.2500	1-1/4	1-19/64	5/16	**1023T-0208**	**1023A-0208**	**1023N-0208**
	2-9/32	2.2813	1-1/4	1-19/64	5/16	**1023T-0209**	**1023A-0209**	**1023N-0209**
	2-5/16	2.3125	1-1/4	1-19/64	5/16	**1023T-0210**	**1023A-0210**	**1023N-0210**
	2-11/32	2.3438	1-1/4	1-19/64	5/16	**1023T-0211**	**1023A-0211**	**1023N-0211**
	2-3/8	2.3750	1-1/4	1-19/64	5/16	**1023T-0212**	**1023A-0212**	**1023N-0212**

Inserts sold in multiples of 1.

A40: 30 - 33

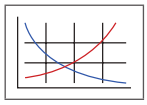

Key on A40: 1

A40: 12 - 13

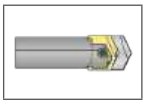

Sizes not shown are available upon request.
When ordering, please follow the example below:

Inch:	1-63/64", High Performance (C series), TiN = use Part No. **1023T-1.9844**
Decimal:	1.9763", High Performance (C series), TiN = use Part No. **1023T-1.9763**

Universal Spade Drill Inserts

C Series | Diameter Range: 1.5000" - 2.3750"

Flat Bottom

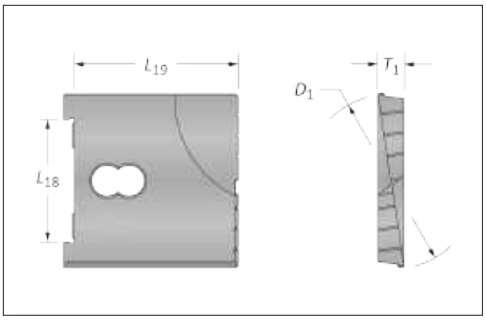

90° Spot & Chamfer

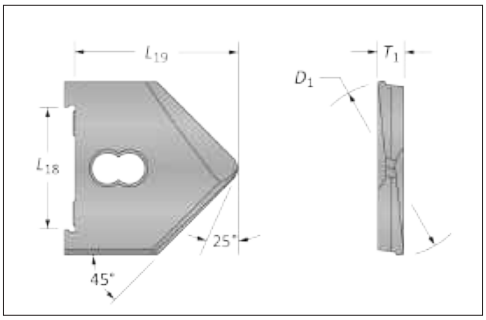

Series	D_1 inch Fraction	D_1 inch Decimal	Insert L_{18}	Insert L_{19}	Insert T_1	Flat Bottom	90° Spot & Chamfer
C	1-1/2	1.5000	1-1/4	2	5/16	**10434-0116**	—
	1-9/16	1.5625	1-1/4	2	5/16	**10434-0118**	—
	1-5/8	1.6250	1-1/4	2	5/16	**10434-0120**	—
	1-11/16	1.6875	1-1/4	2	5/16	**10434-0122**	—
	1-3/4	1.7500	1-1/4	2	5/16	**10434-0124**	—
	1-13/16	1.8125	1-1/4	2	5/16	**10434-0126**	—
	1-7/8	1.8750	1-1/4	2	5/16	**10434-0128**	—
	1-15/16	1.9375	1-1/4	2	5/16	**10434-0130**	—
	2	2.0000	1-1/4	2	5/16	**10434-0200**	**11234-0200**

Inserts sold in multiples of 1.

A40: 30 - 33
Key on A40: 1

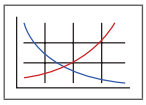

A40: 12 - 13

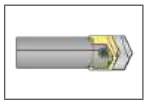

A40: 2

High Performance / Universal Spade Drill Insert Holders

C Series

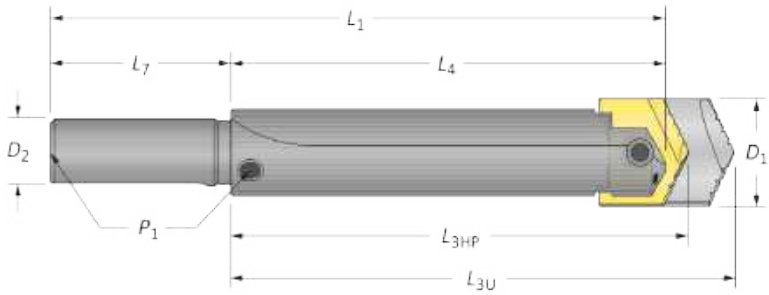

Straight Shank

	Length	D_1	Holder L_{3HP}	L_{3U}	L_4	L_1	Shank D_2	L_7	P_1	Style	Part No.
	Stub	1.5000 - 2.3750	2.297	3.000	2.000	6.000	1-1/2	4.000	—	#125	**20231-1500**
	Short	1.5000 - 2.3750	4.297	5.000	4.000	8.000	1-1/4	4.000	—	#150	**20431-1250**
	Short	1.5000 - 2.3750	4.297	5.000	4.000	8.000	1-1/4	4.000	1/4 NPT	#100	**20631-1250**
i	Short	1.5000 - 2.3750	4.297	5.000	4.000	8.000	1-1/2	4.000	1/4 NPT	#100	**20631-1500**
	Standard	1.5000 - 2.3750	8.797	9.500	8.500	12.500	1-1/4	4.000	1/4 NPT	#200	**20831-1250**
	Standard	1.5000 - 2.3750	8.797	9.500	8.500	12.500	1-1/2	4.000	1/4 NPT	#200	**20831-1500**
	Long	1.5000 - 2.3750	18.297	19.000	18.000	22.000	1-1/2	4.000	1/4 NPT	#250	⚠ **21031-1500**

Connection Accessories

Clamping Screw		Blade-Loc Screw		Pipe Plug: Straight Shank		Pipe Plug: MT Shank (with RCA)	
Part No.	Key	Part No.	Key	Part No.	Key	Part No.	Key
772074-1	5/64"	—	—	**710004-1**	5/32"	**710006-1**	7/32"

A40: 10 - 11

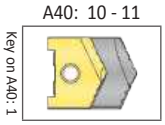

i = Imperial (in)
m = Metric (mm)

⚠ **WARNING** Refer to Speed and Feed charts for recommended adjustments to speeds and feeds. Refer to page A40: 34 for deep hole drilling guidelines in this section of the catalog. Visit **www.alliedmachine.com/DeepHoleGuidelines** for the most up-to-date information and procedures. Factory technical assistance is available for your specific applications through our Application Engineering Team.

High Performance / Universal Spade Drill Insert Holders

C Series

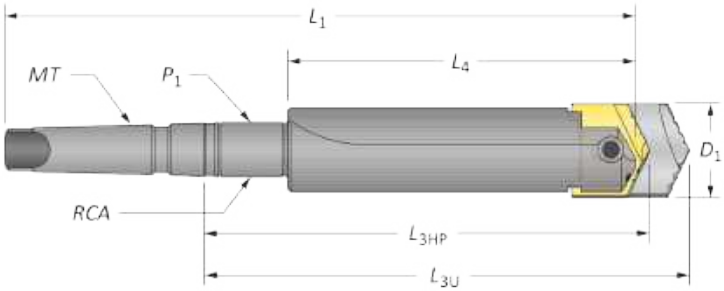

Taper Shank

	Length	D_1	Holder L_{3HP}	Holder L_{3U}	Holder L_4	Holder L_1	Shank MT	Shank P_1	Shank RCA	Shank Style	Part No.
	Short	1.5000 - 2.3750	4.547	5.250	4.000	8.875	#4 MT	—	—	#300	**21431-0004**
	Short	1.5000 - 2.3750	4.547	5.250	4.000	8.875	#4 MT	—	—	#300 TSC	**21531-0004***
	Short	1.5000 - 2.3750	4.547	5.250	4.000	10.125	#5 MT	—	—	#300 TSC	**21531-0005***
	Short	1.5000 - 2.3750	6.234	6.938	4.000	10.563	#4 MT	1/4 NPT	2T-4SR	#400 SR	**21631-0004**
ⓘ	Standard	1.5000 - 2.3750	10.734	11.438	8.500	15.063	#4 MT	1/4 NPT	2T-4SR	#500 SR	**21831-0004**
	Standard	1.5000 - 2.3750	10.734	11.438	8.500	16.313	#5 MT	1/4 NPT	2T-5SR	#500 SR	**21831-0005**
	Long	1.5000 - 2.3750	20.234	20.938	18.000	24.563	#4 MT	1/4 NPT	2T-4SR	#600 SR	⚠ **22031-0004**
	Long	1.5000 - 2.3750	20.234	20.938	18.000	25.813	#5 MT	1/4 NPT	2T-5SR	#600 SR	⚠ **22031-0005**
	XL	1.5000 - 2.3750	28.234	28.938	26.000	32.563	#4 MT	1/4 NPT	2T-4SR	#700 SR	⚠ **22231-0004**
	XL	1.5000 - 2.3750	28.234	28.938	26.000	33.813	#5 MT	1/4 NPT	2T-5SR	#700 SR	⚠ **22231-0005**

*Through shank coolant, coolant inlet diameter = 5/16".

Rotary Coolant Adapter (RCA) and Accessories

	ID	OD	L_1	Driving Rod Thread	P_1	Part No.*	RCA O-Rings Kit Part No.**	RCA O-Rings Replacements
ⓘ	1.250	2.500	1.375	3/8" - 16	1/4 NPT	⚠ **2T-4SR**	2T1-4SR	2T1-4OR-10
	1.750	3.000	1.375	3/8" - 16	1/4 NPT	⚠ **2T-5SR**	2T1-5SR	2T1-5OR-10

*RCA comes complete with (1) RCA, (2) O-rings, (2) snap rings, and (2) thrust washers.
**RCA Repair Kit includes (2) O-rings, (2) snap rings, and (2) thrust washers.
⚠ Refer to page A40: 27 for proper RCA assembly and safety information.

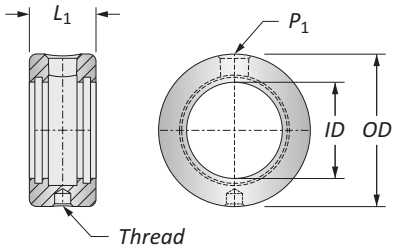

Connection Accessories

Clamping Screw Part No.	Clamping Screw Key	Blade-Loc Screw Part No.	Blade-Loc Screw Key	Pipe Plug Straight Shank Part No.	Pipe Plug Straight Shank Key	Pipe Plug MT Shank (with RCA) Part No.	Pipe Plug MT Shank (with RCA) Key
772100-1	3/16"	—	—	**710006-1**	7/32"	**710006-1**	7/32"

A40: 10 - 11

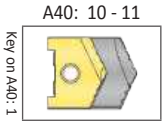

A40: 27

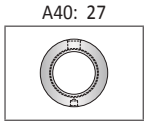

ⓘ = Imperial (in)
ⓜ = Metric (mm)
O-rings sold in packs of 10.

⚠ **WARNING** Refer to Speed and Feed charts for recommended adjustments to speeds and feeds. Refer to page A40: 34 for deep hole drilling guidelines in this section of the catalog. Visit **www.alliedmachine.com/DeepHoleGuidelines** for the most up-to-date information and procedures. Factory technical assistance is available for your specific applications through our Application Engineering Team.

A DRILLING
B BORING
C REAMING
D BURNISHING
E THREADING
X SPECIALS

Universal Spade Drill Inserts

D Series | Diameter Range: 2.0000" - 2.8750"

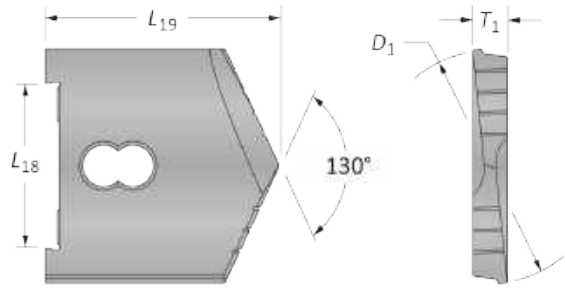

Series	D_1 inch Fraction	D_1 inch Decimal	Insert L_{18}	Insert L_{19}	Insert T_1	130° CPM-M4	Flat Bottom	90° Spot & Chamfer
D	2	2.0000	1-3/4	2-3/8	3/8	**10244-0200**	**10444-0200**	—
	2-1/32	2.0313	1-3/4	2-3/8	3/8	**10244-0201**	—	—
	2-1/16	2.0625	1-3/4	2-3/8	3/8	**10244-0202**	**10444-0202**	—
	2-3/32	2.0938	1-3/4	2-3/8	3/8	**10244-0203**	—	—
	2-1/8	2.1250	1-3/4	2-3/8	3/8	**10244-0204**	**10444-0204**	—
	2-5-32	2.1563	1-3/4	2-3/8	3/8	**10244-0205**	—	—
	2-3-16	2.1875	1-3/4	2-3/8	3/8	**10244-0206**	**10444-0206**	—
	2-7/32	2.2188	1-3/4	2-3/8	3/8	**10244-0207**	—	—
	2-1/4	2.2500	1-3/4	2-3/8	3/8	**10244-0208**	**10444-0208**	—
	2-9/32	2.2813	1-3/4	2-3/8	3/8	**10244-0209**	—	—
	2-5/16	2.3125	1-3/4	2-3/8	3/8	**10244-0210**	**10444-0210**	—
	2-11/32	2.3438	1-3/4	2-3/8	3/8	**10244-0211**	—	—
	2-3/8	2.3750	1-3/4	2-3/8	3/8	**10244-0212**	**10444-0212**	—
	2-13/32	2.4063	1-3/4	2-3/8	3/8	**10244-0213**	—	—
	2-7/16	2.4375	1-3/4	2-3/8	3/8	**10244-0214**	**10444-0214**	—
	2-15/32	2.4688	1-3/4	2-3/8	3/8	**10244-0215**	—	—
	2-1/2	2.5000	1-3/4	2-3/8	3/8	**10244-0216**	**10444-0216**	**11244-0216**
D Oversize	2-17/32	2.5313	1-3/4	2-3/8	3/8	**10244-0217**	—	—
	2-9/16	2.5625	1-3/4	2-3/8	3/8	**10244-0218**	—	—
	2-19/32	2.5938	1-3/4	2-3/8	3/8	**10244-0219**	—	—
	2-5/8	2.6250	1-3/4	2-3/8	3/8	**10244-0220**	—	—
	2-21/32	2.6563	1-3/4	2-3/8	3/8	**10244-0221**	—	—
	2-11/16	2.6875	1-3/4	2-3/8	3/8	**10244-0222**	—	—
	2-23/32	2.7188	1-3/4	2-3/8	3/8	**10244-0223**	—	—
	2-3/4	2.7500	1-3/4	2-3/8	3/8	**10244-0224**	—	—
	2-25/35	2.7813	1-3/4	2-3/8	3/8	**10244-0225**	—	—
	2-13/16	2.8125	1-3/4	2-3/8	3/8	**10244-0226**	—	—
	2-27/32	2.8438	1-3/4	2-3/8	3/8	**10244-0227**	—	—
	2-7/8	2.8750	1-3/4	2-3/8	3/8	**10244-0228**	—	—

Inserts sold in multiples of 1.

Flat Bottom

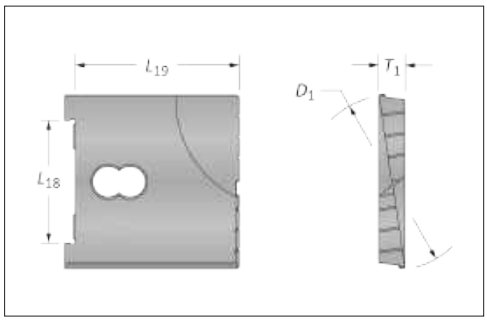

90° Spot & Chamfer

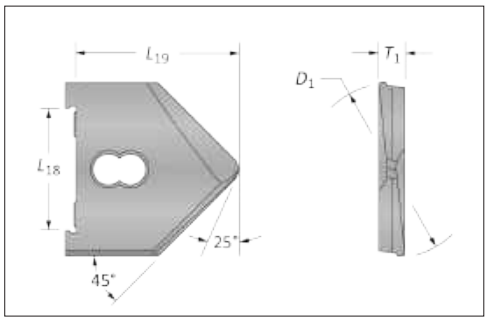

A40: 32 - 33

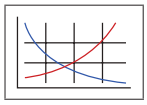

A40: 15

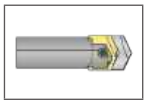

A40: 2

Sizes not shown are available upon request.
When ordering, please follow the example below:

Inch:	2-21/64", Universal (D series), 130° CPM-M4 = use Part No. **10244-2.3281**
Decimal:	2.4500", Universal (D series), 130° CPM-M4 = use Part No. **10244-2.4500**

Universal Spade Drill Insert Holders

D Series

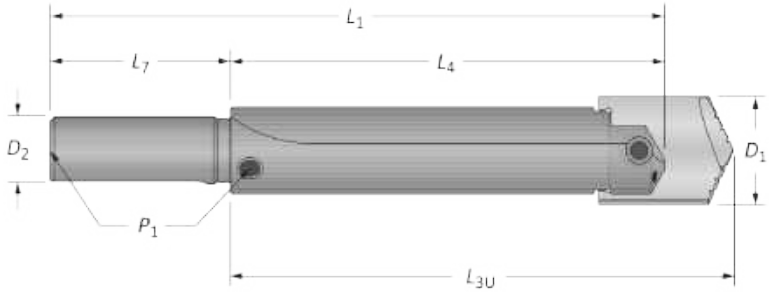

Straight Shank

	Length	D_1	L_{3U}	L_4	L_1	Shank D_2	Shank L_7	Shank P_1	Shank Style	Part No.
	Stub	2.0000 - 2.8750	3.250	2.250	6.250	1-1/2	4.000	—	#125	**20241-1500**
	Short	2.0000 - 2.8750	5.500	4.500	8.500	1-1/2	4.000	—	#150	**20441-1500**
ⓘ	Short	2.0000 - 2.8750	5.500	4.500	8.500	1-1/2	4.000	1/4 NPT	#100	**20641-1500**
	Standard	2.0000 - 2.8750	10.000	9.000	13.000	1-1/2	4.000	1/4 NPT	#200	**20841-1500**
	Long	2.0000 - 2.8750	19.000	18.000	22.000	1-1/2	4.000	1/4 NPT	#250	⚠ **21041-1500**

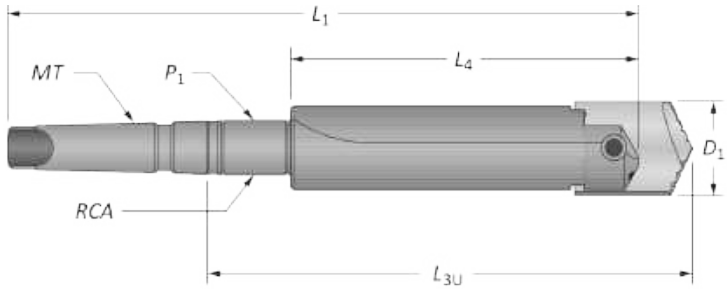

Taper Shank

	Length	D_1	L_{3U}	L_4	L_1	Shank *MT*	Shank P_1	Shank RCA	Shank Style	Part No.
	Short	2.0000 - 2.8750	5.750	4.500	9.375	#4 MT	—	—	#300	**21441-0004**
	Short	2.0000 - 2.8750	5.750	4.500	10.625	#5 MT	—	—	#300	**21441-0005**
	Short	2.0000 - 2.8750	5.750	4.500	9.375	#4 MT	—	—	#300 TSC	**21541-0004***
	Short	2.0000 - 2.8750	7.438	4.500	11.063	#4 MT	1/4 NPT	2T-4SR	#400 SR	**21641-0004**
ⓘ	Standard	2.0000 - 2.8750	11.938	9.000	15.563	#4 MT	1/4 NPT	2T-4SR	#500 SR	**21841-0004**
ⓘ	Standard	2.0000 - 2.8750	11.938	9.000	16.813	#5 MT	1/4 NPT	2T-5SR	#500 SR	**21841-0005**
	Long	2.0000 - 2.8750	20.938	18.000	24.563	#4 MT	1/4 NPT	2T-4SR	#600 SR	⚠ **22041-0004**
	Long	2.0000 - 2.8750	20.938	18.000	25.813	#5 MT	1/4 NPT	2T-5SR	#600 SR	⚠ **22041-0005**
	XL	2.0000 - 2.8750	30.938	28.000	34.563	#4 MT	1/4 NPT	2T-4SR	#700 SR	⚠ **22241-0004**
	XL	2.0000 - 2.8750	30.938	28.000	35.813	#5 MT	1/4 NPT	2T-5SR	#700 SR	⚠ **22241-0005**

*Through shank coolant, coolant inlet diameter = 5/16".

Rotary Coolant Adapter (RCA) and Accessories

	ID	*OD*	L_1	Driving Rod Thread	P_1	Part No.*	RCA O-Rings Kit Part No.**	RCA O-Rings Replacements
ⓘ	1.250	2.500	1.375	3/8" - 16	1/4 NPT	⚠ **2T-4SR**	2T1-4SR	2T1-4OR-10
ⓘ	1.750	3.000	1.375	3/8" - 16	1/4 NPT	⚠ **2T-5SR**	2T1-5SR	2T1-5OR-10

*RCA comes complete with (1) RCA, (2) O-rings, (2) snap rings, and (2) thrust washers.
**RCA Repair Kit includes (2) O-rings, (2) snap rings, and (2) thrust washers.
⚠ Refer to page A40: 27 for proper RCA assembly and safety information.

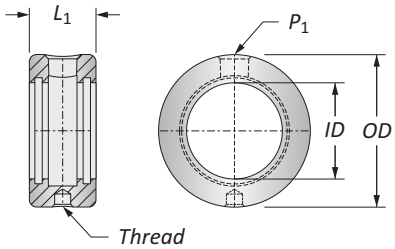

Connection Accessories

Clamping Screw Part No.	Clamping Screw Key	Blade-Loc Screw Part No.	Blade-Loc Screw Key	Pipe Plug Straight Shank Part No.	Pipe Plug Straight Shank Key	Pipe Plug MT Shank (with RCA) Part No.	Pipe Plug MT Shank (with RCA) Key
772160-1	7/16"	**724050-1**	1/8"	**710006-1**	7/32"	**710006-1**	7/32"

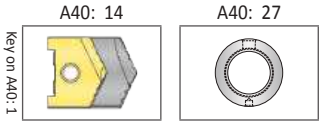

ⓘ = Imperial (in)
ⓜ = Metric (mm)
O-rings sold in packs of 10.

⚠ **WARNING** Refer to Speed and Feed charts for recommended adjustments to speeds and feeds. Refer to page A40: 34 for deep hole drilling guidelines in this section of the catalog. Visit **www.alliedmachine.com/DeepHoleGuidelines** for the most up-to-date information and procedures. Factory technical assistance is available for your specific applications through our Application Engineering Team.

Universal Spade Drill Inserts

E Series | Diameter Range: 2.5000" - 3.3750"

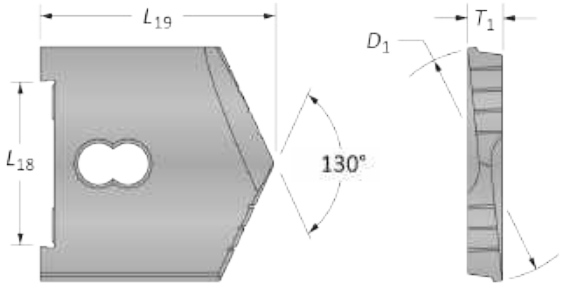

Series	D_1 inch Fraction	D_1 inch Decimal	Inserts L_{18}	Inserts L_{19}	Inserts T_1	130° CPM-M4	Flat Bottom	90° Spot & Chamfer
E	2-1/2	2.5000	2-1/16	2-5/8	7/16	**10254-0216**	**10454-0216**	—
	2-17/32	2.5313	2-1/16	2-5/8	7/16	**10254-0217**	—	—
	2-9/16	2.5625	2-1/16	2-5/8	7/16	**10254-0218**	**10454-0218**	—
	2-19/32	2.5938	2-1/16	2-5/8	7/16	**10254-0219**	—	—
	2-5/8	2.6250	2-1/16	2-5/8	7/16	**10254-0220**	**10454-0220**	—
	2-21/32	2.6563	2-1/16	2-5/8	7/16	**10254-0221**	—	—
	2-11/16	2.6875	2-1/16	2-5/8	7/16	**10254-0222**	**10454-0222**	—
	2-23/32	2.7188	2-1/16	2-5/8	7/16	**10254-0223**	—	—
	2-3/4	2.7500	2-1/16	2-5/8	7/16	**10254-0224**	**10454-0224**	—
	2-25/32	2.7813	2-1/16	2-5/8	7/16	**10254-0225**	—	—
	2-13/16	2.8125	2-1/16	2-5/8	7/16	**10254-0226**	**10454-0226**	—
	2-27/32	2.8438	2-1/16	2-5/8	7/16	**10254-0227**	—	—
	2-7/8	2.8750	2-1/16	2-5/8	7/16	**10254-0228**	**10454-0228**	—
	2-29/32	2.9063	2-1/16	2-5/8	7/16	**10254-0229**	—	—
	2-15/16	2.9375	2-1/16	2-5/8	7/16	**10254-0230**	**10454-0230**	—
	2-31/32	2.9688	2-1/16	2-5/8	7/16	**10254-0231**	—	—
	3	3.0000	2-1/16	2-5/8	7/16	**10254-0300**	**10454-0300**	**11254-0300**
E Oversize	3-1/32	3.0313	2-1/16	2-5/8	7/16	**10254-0301**	—	—
	3-1/16	3.0625	2-1/16	2-5/8	7/16	**10254-0302**	—	—
	3-3/32	3.0938	2-1/16	2-5/8	7/16	**10254-0303**	—	—
	3-1/8	3.1250	2-1/16	2-5/8	7/16	**10254-0304**	—	—
	3-5/32	3.1563	2-1/16	2-5/8	7/16	**10254-0305**	—	—
	3-3/16	3.1875	2-1/16	2-5/8	7/16	**10254-0306**	—	—
	3-7/32	3.2188	2-1/16	2-5/8	7/16	**10254-0307**	—	—
	3-1/4	3.2500	2-1/16	2-5/8	7/16	**10254-0308**	—	—
	3-9/32	3.2813	2-1/16	2-5/8	7/16	**10254-0309**	—	—
	3-5/16	3.3125	2-1/16	2-5/8	7/16	**10254-0310**	—	—
	3-11/32	3.3438	2-1/16	2-5/8	7/16	**10254-0311**	—	—
	3-3/8	3.3750	2-1/16	2-5/8	7/16	**10254-0312**	—	—

Inserts sold in multiples of 1.

Flat Bottom

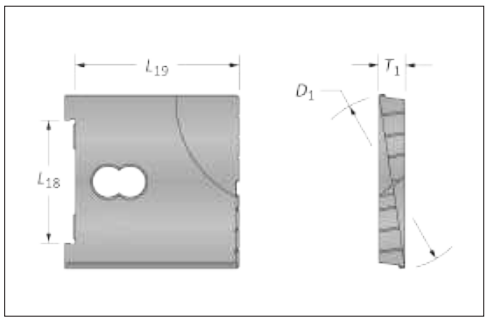

90° Spot & Chamfer

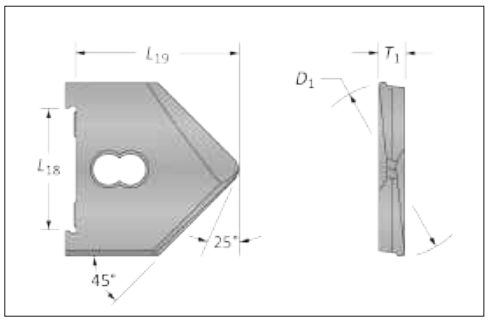

A40: 32 - 33

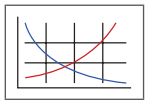

Key on A40: 1

A40: 17

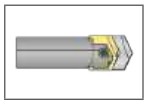

A40: 2

Sizes not shown are available upon request.
When ordering, please follow the example below:

Inch:	2-63/64", Universal (E series), 130° CPM-M4 = use Part No. **10254-2.9844**
Decimal:	2.9763", Universal (E series), 130° CPM-M4 = use Part No. **10254-2.9763**

Universal Spade Drill Insert Holders

E Series

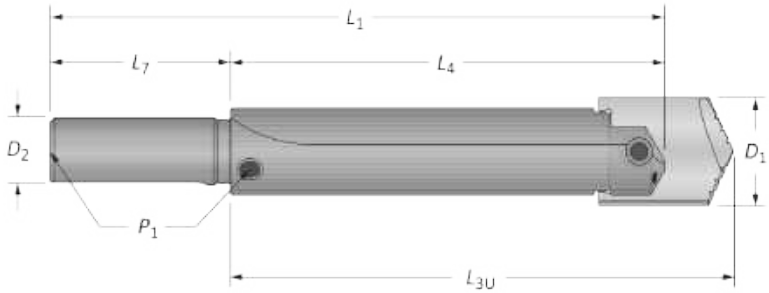

Straight Shank

	Length	D_1	L_{3U}	L_4	L_1	Shank D_2	Shank L_7	Shank P_1	Shank Style	Part No.
	Stub	2.5000 - 3.3750	3.563	2.500	6.500	2	4.000	—	#125	**20251-2000**
	Short	2.5000 - 3.3750	6.063	5.000	9.000	1-3/4	4.000	—	#150	**20451-1750**
ⓘ	Short	2.5000 - 3.3750	6.063	5.000	9.000	1-3/4	4.000	1/2 NPT	#100	**20651-1750**
	Standard	2.5000 - 3.3750	11.063	10.000	14.000	2	4.000	1/2 NPT	#200	**20851-2000**
	Long	2.5000 - 3.3750	21.063	20.000	24.000	2	4.000	1/2 NPT	#250	⚠ **21051-2000**

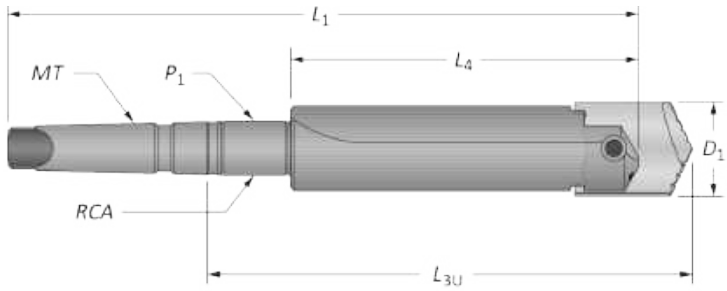

Taper Shank

	Length	D_1	L_{3U}	L_4	L_1	Shank *MT*	Shank P_1	Shank RCA	Shank Style	Part No.
	Short	2.5000 - 3.3750	6.313	5.000	9.875	#4 MT	—	—	#300	**21451-0004**
	Short	2.5000 - 3.3750	6.313	5.000	11.125	#5 MT	—	—	#300	**21451-0005**
	Short	2.5000 - 3.3750	6.313	5.000	11.125	#5 MT	—	—	#300 TSC	**21551-0005***
ⓘ	Short	2.5000 - 3.3750	8.626	5.000	13.438	#5 MT	1/2 NPT	2T-6SR	#400 SR	**21651-0005**
	Standard	2.5000 - 3.3750	13.626	10.000	18.438	#5 MT	1/2 NPT	2T-6SR	#500 SR	**21851-0005**
	Long	2.5000 - 3.3750	23.626	20.000	28.438	#5 MT	1/2 NPT	2T-6SR	#600 SR	⚠ **22051-0005**
	XL	2.5000 - 3.3750	33.626	30.000	38.438	#5 MT	1/2 NPT	2T-6SR	#700 SR	⚠ **22251-0005**

*Through shank coolant, coolant inlet diameter = 3/8".

Rotary Coolant Adapter (RCA) and Accessories

	ID	*OD*	L_1	Driving Rod Thread	P_1	Part No.*	RCA O-Rings Kit Part No.**	RCA O-Rings Replacements
ⓘ	2.250	3.750	1.750	1/2" - 13	1/2 NPT	⚠ **2T-6SR**	2T1-6SR	2T1-6OR-10

*RCA comes complete with (1) RCA, (2) O-rings, (2) snap rings, and (2) thrust washers.
**RCA Repair Kit includes (2) O-rings, (2) snap rings, and (2) thrust washers.
⚠ Refer to page A40: 27 for proper RCA assembly and safety information.

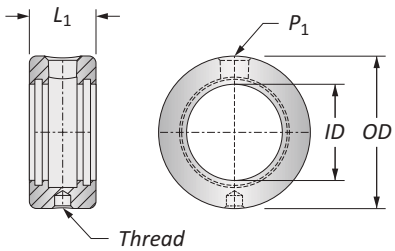

Connection Accessories

Clamping Screw Part No.	Clamping Screw Key	Blade-Loc Screw Part No.	Blade-Loc Screw Key	Pipe Plug Straight Shank Part No.	Pipe Plug Straight Shank Key	Pipe Plug MT Shank (with RCA) Part No.	Pipe Plug MT Shank (with RCA) Key
772232-1	3/8"	**724050-1**	1/8"	**710010-1**	3/8"	**710010-1**	3/8"

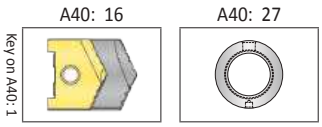

ⓘ = Imperial (in)
ⓜ = Metric (mm)
O-rings sold in packs of 10.

⚠ **WARNING** Refer to Speed and Feed charts for recommended adjustments to speeds and feeds. Refer to page A40: 34 for deep hole drilling guidelines in this section of the catalog. Visit **www.alliedmachine.com/DeepHoleGuidelines** for the most up-to-date information and procedures. Factory technical assistance is available for your specific applications through our Application Engineering Team.

Universal Spade Drill Inserts

F Series | Diameter Range: 3.0000" - 3.8750"

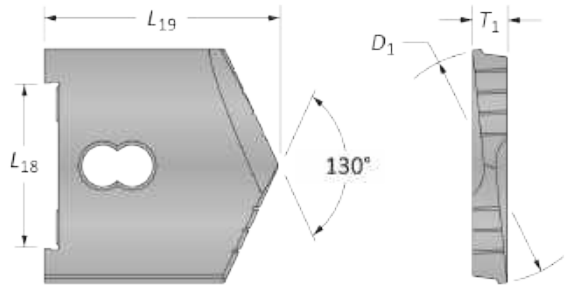

Series	D_1 inch Fraction	D_1 inch Decimal	Insert L_{18}	Insert L_{19}	Insert T_1	130° CPM-M4	Flat Bottom	90° Spot & Chamfer
F	3	3.0000	2-5/8	3-1/8	1/2	**10264-0300**	**10464-0300**	—
	3-1/32	3.0313	2-5/8	3-1/8	1/2	**10264-0301**	—	—
	3-1/16	3.0625	2-5/8	3-1/8	1/2	**10264-0302**	**10464-0302**	—
	3-3/32	3.0938	2-5/8	3-1/8	1/2	**10264-0303**	—	—
	3-1/8	3.1250	2-5/8	3-1/8	1/2	**10264-0304**	**10464-0304**	—
	3-5/32	3.1563	2-5/8	3-1/8	1/2	**10264-0305**	—	—
	3-3/16	3.1875	2-5/8	3-1/8	1/2	**10264-0306**	**10464-0306**	—
	3-7/32	3.2188	2-5/8	3-1/8	1/2	**10264-0307**	—	—
	3-1/4	3.2500	2-5/8	3-1/8	1/2	**10264-0308**	—	—
	3-9/32	3.2813	2-5/8	3-1/8	1/2	**10264-0309**	—	—
	3-5/16	3.3125	2-5/8	3-1/8	1/2	**10264-0310**	**10464-0310**	—
	3-11/32	3.3438	2-5/8	3-1/8	1/2	**10264-0311**	—	—
	3-3/8	3.3750	2-5/8	3-1/8	1/2	**10264-0312**	—	—
	3-13/32	3.4063	2-5/8	3-1/8	1/2	**10264-0313**	—	—
	3-7/16	3.4375	2-5/8	3-1/8	1/2	**10264-0314**	**10464-0314**	—
	3-15/32	3.4688	2-5/8	3-1/8	1/2	**10264-0315**	—	—
	3-1/2	3.5000	2-5/8	3-1/8	1/2	**10264-0316**	**10464-0316**	**11264-0316**
F Oversize	3-17/32	3.5313	2-5/8	3-1/8	1/2	**10264-0317**	—	—
	3-9/16	3.5625	2-5/8	3-1/8	1/2	**10264-0318**	—	—
	3-19/32	3.5938	2-5/8	3-1/8	1/2	**10264-0319**	—	—
	3-5/8	3.6250	2-5/8	3-1/8	1/2	**10264-0320**	—	—
	3-21/32	3.6563	2-5/8	3-1/8	1/2	**10264-0321**	—	—
	3-11/16	3.6875	2-5/8	3-1/8	1/2	**10264-0322**	—	—
	3-23/32	3.7188	2-5/8	3-1/8	1/2	**10264-0323**	—	—
	3-3/4	3.7500	2-5/8	3-1/8	1/2	**10264-0324**	—	—
	3-25/32	3.7813	2-5/8	3-1/8	1/2	**10264-0325**	—	—
	3-13/16	3.8125	2-5/8	3-1/8	1/2	**10264-0326**	—	—
	3-27/32	3.8438	2-5/8	3-1/8	1/2	**10264-0327**	—	—
	3-7/8	3.8750	2-5/8	3-1/8	1/2	**10264-0328**	—	—

Inserts sold in multiples of 1.

Flat Bottom

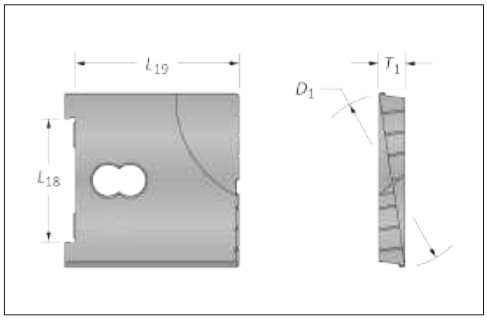

90° Spot & Chamfer

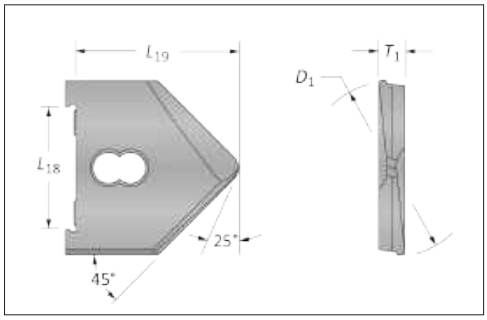

A40: 32 - 33

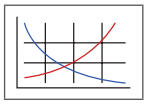

Key on A40: 1

A40: 19

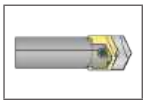

A40: 2

Sizes not shown are available upon request.
When ordering, please follow the example below:

Inch:	3-21/64", Universal (F series), 130° CPM-M4 = use Part No. **10264-3.3281**
Decimal:	3.4500", Universal (F series), 130° CPM-M4 = use Part No. **10264-3.4500**

Universal Spade Drill Insert Holders

F Series

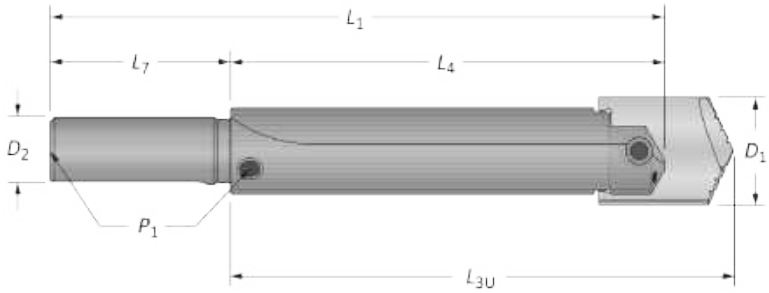

Straight Shank

	Length	D_1	L_{3U}	L_4	L_1	Shank D_2	Shank L_7	Shank P_1	Shank Style	Part No.
	Stub	3.0000 - 3.8750	4.000	2.750	6.750	2-1/2	4.000	—	#125	**20261-2500**
	Short	3.0000 - 3.8750	6.750	5.500	9.500	2	4.000	—	#150	**20461-2000**
ⓘ	Short	3.0000 - 3.8750	6.750	5.500	9.500	2	4.000	1/2 NPT	#100	**20661-2000**
	Short	3.0000 - 3.8750	6.750	5.500	9.500	2-1/2	4.000	1/2 NPT	#100	**20661-2500**
	Standard	3.0000 - 3.8750	12.750	11.500	15.500	2	4.000	1/2 NPT	#200	**20861-2000**
	Long	3.0000 - 3.8750	21.250	20.000	24.000	2-1/2	4.000	1/2 NPT	#250	⚠ **21061-2500**

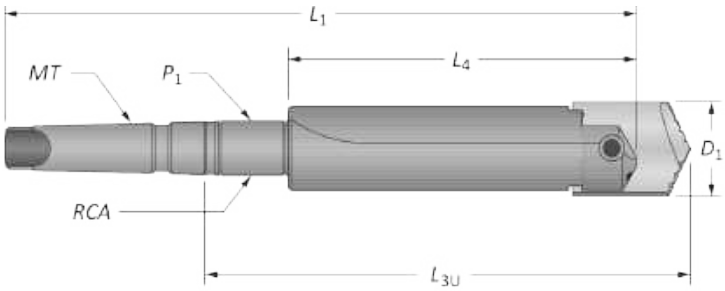

Taper Shank

	Length	D_1	L_{3U}	L_4	L_1	Shank *MT*	Shank P_1	Shank RCA	Shank Style	Part No.
	Short	3.0000 - 3.8750	7.000	5.500	11.625	#5 MT	—	—	#300	**21461-0005**
	Short	3.0000 - 3.8750	7.000	5.500	11.625	#5 MT	—	—	#300 TSC	**21561-0005***
	Short	3.0000 - 3.8750	9.313	5.500	13.938	#5 MT	1/2 NPT	2T-6SR	#400 SR	**21661-0005**
ⓘ	Standard	3.0000 - 3.8750	15.313	11.500	19.938	#5 MT	1/2 NPT	2T-6SR	#500 SR	**21861-0005**
	Long	3.0000 - 3.8750	23.813	20.000	28.438	#5 MT	1/2 NPT	2T-6SR	#600 SR	⚠ **22061-0005**
	XL	3.0000 - 3.8750	36.813	33.000	41.438	#5 MT	1/2 NPT	2T-6SR	#700 SR	⚠ **22261-0005**

*Through shank coolant, coolant inlet diameter = 3/8".

Rotary Coolant Adapter (RCA) and Accessories

	ID	*OD*	L_1	Driving Rod Thread	P_1	Part No.*	RCA O-Rings Kit Part No.**	RCA O-Rings Replacements
ⓘ	2.250	3.750	1.750	1/2" - 13	1/2 NPT	⚠ **2T-6SR**	2T1-6SR	2T1-6OR-10

*RCA comes complete with (1) RCA, (2) O-rings, (2) snap rings, and (2) thrust washers.
**RCA Repair Kit includes (2) O-rings, (2) snap rings, and (2) thrust washers.
⚠ Refer to page A40: 27 for proper RCA assembly and safety information.

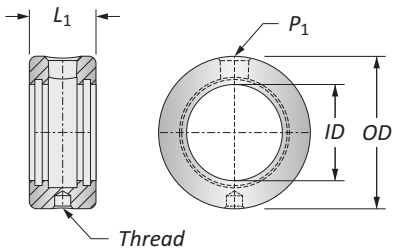

Connection Accessories

Clamping Screw Part No.	Clamping Screw Key	Blade-Loc Screw Part No.	Blade-Loc Screw Key	Pipe Plug Straight Shank Part No.	Pipe Plug Straight Shank Key	Pipe Plug MT Shank (with RCA) Part No.	Pipe Plug MT Shank (with RCA) Key
772272-1	7/16"	**724050-1**	1/8"	**710010-1**	3/8"	**710010-1**	3/8"

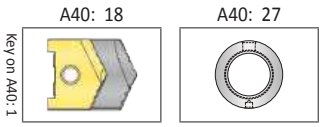

ⓘ = Imperial (in)
ⓜ = Metric (mm)
O-rings sold in packs of 10.

⚠ **WARNING** Refer to Speed and Feed charts for recommended adjustments to speeds and feeds. Refer to page A40: 34 for deep hole drilling guidelines in this section of the catalog. Visit **www.alliedmachine.com/DeepHoleGuidelines** for the most up-to-date information and procedures. Factory technical assistance is available for your specific applications through our Application Engineering Team.

Universal Spade Drill Inserts

G Series | Diameter Range: 3.5000" - 4.5000"

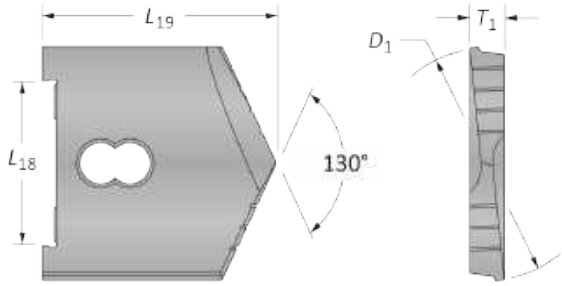

Series	D_1 inch Fraction	D_1 inch Decimal	Insert L_{18}	Insert L_{19}	Insert T_1	130° CPM-M4	Flat Bottom
G	3-1/2	3.5000	3-1/16	3-3/8	5/8	**10274-0316**	**10474-0316**
	3-17/32	3.5313	3-1/16	3-3/8	5/8	**10274-0317**	—
	3-9/16	3.5625	3-1/16	3-3/8	5/8	**10274-0318**	**10474-0318**
	3-19/32	3.5938	3-1/16	3-3/8	5/8	**10274-0319**	—
	3-5/8	3.6250	3-1/16	3-3/8	5/8	**10274-0320**	**10474-0320**
	3-21/32	3.6563	3-1/16	3-3/8	5/8	**10274-0321**	—
	3-11/16	3.6875	3-1/16	3-3/8	5/8	**10274-0322**	**10474-0322**
	3-23/32	3.7188	3-1/16	3-3/8	5/8	**10274-0323**	—
	3-3/4	3.7500	3-1/16	3-3/8	5/8	**10274-0324**	**10474-0324**
	3-25/32	3.7813	3-1/16	3-3/8	5/8	**10274-0325**	—
	3-13/16	3.8125	3-1/16	3-3/8	5/8	**10274-0326**	**10474-0326**
	3-27/32	3.8438	3-1/16	3-3/8	5/8	**10274-0327**	—
	3-7/8	3.8750	3-1/16	3-3/8	5/8	**10274-0328**	**10474-0328**
	3-29/32	3.9063	3-1/16	3-3/8	5/8	**10274-0329**	—
	3-15/16	3.9375	3-1/16	3-3/8	5/8	**10274-0330**	**10474-0330**
	3-31/32	3.9688	3-1/16	3-3/8	5/8	**10274-0331**	—
	4	4.0000	3-1/16	3-3/8	5/8	**10274-0400**	**10474-0400**
G Oversize	4-1/16	4.0625	3-1/16	3-3/8	5/8	**10274-0402**	—
	4-1/8	4.1250	3-1/16	3-3/8	5/8	**10274-0404**	—
	4-3/16	4.1875	3-1/16	3-3/8	5/8	**10274-0406**	—
	4-1/4	4.2500	3-1/16	3-3/8	5/8	**10274-0408**	—
	4-5/16	4.3125	3-1/16	3-3/8	5/8	**10274-0410**	—
	4-3/8	4.3750	3-1/16	3-3/8	5/8	**10274-0412**	—
	4-7/16	4.4375	3-1/16	3-3/8	5/8	**10274-0414**	—
	4-1/2	4.5000	3-1/16	3-3/8	5/8	**10274-0416**	—

Inserts sold in multiples of 1.

Flat Bottom

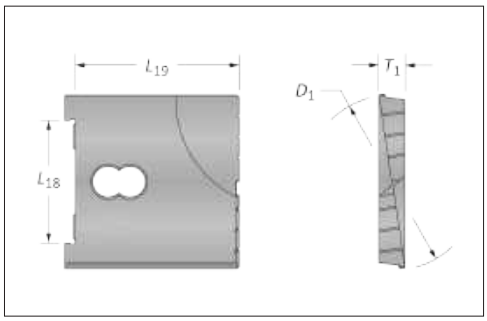

A40: 32 - 33

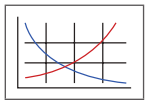

Key on A40: 1

A40: 21

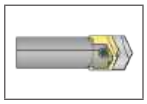

A40: 2

Sizes not shown are available upon request.
When ordering, please follow the example below:

Inch:	3-63/64", Universal (G series), 130° CPM-M4 = use Part No. **10274-3.9844**
Decimal:	3.9763", Universal (G series), 130° CPM-M4 = use Part No. **10274-3.9763**

Universal Spade Drill Insert Holders

G Series

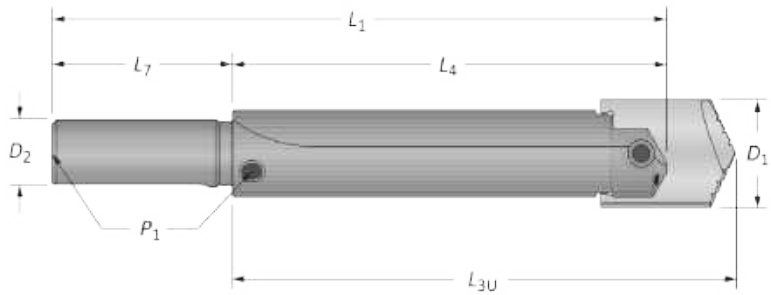

Straight Shank

	Length	D_1	L_{3U}	L_4	L_1	Shank D_2	Shank L_7	Shank P_1	Shank Style	Part No.
ⓘ	Short	3.5000 - 4.5000	7.438	6.000	11.000	2-1/2	5.000	1/2 NPT	#100	**20671-2500**
	Standard	3.5000 - 4.5000	14.438	13.000	18.000	2-1/2	5.000	1/2 NPT	#200	**20871-2500**

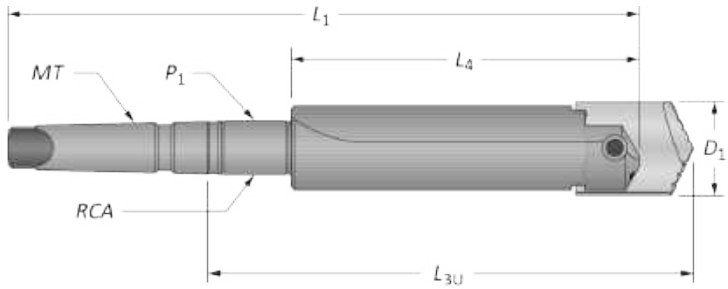

Taper Shank

	Length	D_1	L_{3U}	L_4	L_1	Shank MT	Shank P_1	Shank RCA	Shank Style	Part No.
ⓘ	Short	3.5000 - 4.5000	7.688	6.000	12.125	#5 MT	—	—	#300	**21471-0005**
	Short	3.5000 - 4.5000	7.688	6.000	12.125	#5 MT	—	—	#300 TSC	**21571-0005***
	Short	3.5000 - 4.5000	10.000	6.000	14.438	#5 MT	1/2 NPT	2T-6SR	#400 SR	**21671-0005**
	Standard	3.5000 - 4.5000	17.000	13.000	21.438	#5 MT	1/2 NPT	2T-6SR	#500 SR	**21871-0005**
	Long	3.5000 - 4.5000	28.000	24.000	32.438	#5 MT	1/2 NPT	2T-6SR	#600 SR	⚠ **22071-0005**
	XL	3.5000 - 4.5000	41.000	37.000	45.438	#5 MT	1/2 NPT	2T-6SR	#700 SR	⚠ **22271-0005**

*Through shank coolant, coolant inlet diameter = 3/8".

Rotary Coolant Adapter (RCA) and Accessories

	ID	OD	L_1	Driving Rod Thread	P_1	Part No.*	RCA O-Rings Kit Part No.**	RCA O-Rings Replacements
ⓘ	2.250	3.750	1.750	1/2" - 13	1/2 NPT	⚠ **2T-6SR**	2T1-6SR	2T1-6OR-10

*RCA comes complete with (1) RCA, (2) O-rings, (2) snap rings, and (2) thrust washers.
**RCA Repair Kit includes (2) O-rings, (2) snap rings, and (2) thrust washers.
⚠ Refer to page A40: 27 for proper RCA assembly and safety information.

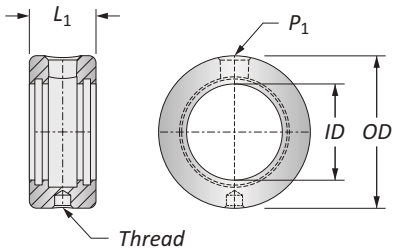

Connection Accessories

Clamping Screw Part No.	Clamping Screw Key	Blade-Loc Screw Part No.	Blade-Loc Screw Key	Pipe Plug Straight Shank Part No.	Pipe Plug Straight Shank Key	Pipe Plug MT Shank (with RCA) Part No.	Pipe Plug MT Shank (with RCA) Key
772312-1	5/8"	**724050-1**	1/8"	**710010-1**	3/8"	**710010-1**	3/8"

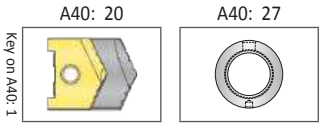

ⓘ = Imperial (in)
ⓜ = Metric (mm)
O-rings sold in packs of 10.

⚠ **WARNING** Refer to Speed and Feed charts for recommended adjustments to speeds and feeds. Refer to page A40: 34 for deep hole drilling guidelines in this section of the catalog. Visit **www.alliedmachine.com/DeepHoleGuidelines** for the most up-to-date information and procedures. Factory technical assistance is available for your specific applications through our Application Engineering Team.

Universal Spade Drill Inserts

H[1] - H[2] Series | Diameter Range: 4.0000" - 5.0000"

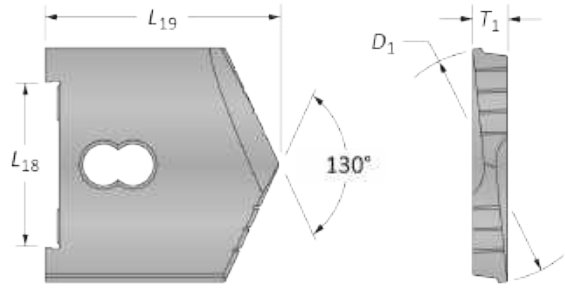

Series	D_1 inch Fraction	D_1 inch Decimal	Insert L_{18}	Insert L_{19}	Insert T_1	130° CPM-M4	Flat Bottom
H[1]	4	4.0000	3-1/2	3-11/16	11/16	**10284-0400**	**10484-0400**
	4-1/16	4.0625	3-1/2	3-11/16	11/16	**10284-0402**	**–**
	4-1/8	4.1250	3-1/2	3-11/16	11/16	**10284-0404**	**10484-0404**
	4-3/16	4.1875	3-1/2	3-11/16	11/16	**10284-0406**	**–**
	4-1/4	4.2500	3-1/2	3-11/16	11/16	**10284-0408**	**10484-0408**
	4-5/16	4.3125	3-1/2	3-11/16	11/16	**10284-0410**	**–**
	4-3/8	4.3750	3-1/2	3-11/16	11/16	**10284-0412**	**10484-0412**
	4-7/16	4.4375	3-1/2	3-11/16	11/16	**10284-0414**	**–**
	4-1/2	4.5000	3-1/2	3-11/16	11/16	**10284-0416**	**10484-0416**
H[2]	4-9/16	4.5625	3-1/2	3-11/16	11/16	**10284-0418**	**–**
	4-5/8	4.6250	3-1/2	3-11/16	11/16	**10284-0420**	**10484-0420**
	4-11/16	4.6875	3-1/2	3-11/16	11/16	**10284-0422**	**–**
	4-3/4	4.7500	3-1/2	3-11/16	11/16	**10284-0424**	**10484-0424**
	4-13/16	4.8125	3-1/2	3-11/16	11/16	**10284-0426**	**–**
	4-7/8	4.8750	3-1/2	3-11/16	11/16	**10284-0428**	**10484-0428**
	4-15/16	4.9375	3-1/2	3-11/16	11/16	**10284-0430**	**–**
	5	5.0000	3-1/2	3-11/16	11/16	**10284-0500**	**10484-0500**

Inserts sold in multiples of 1.

A40: 32 - 33

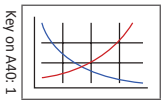

Key on A40: 1

A40: 24

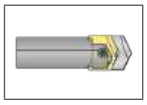

A40: 2

Sizes not shown are available upon request.
When ordering, please follow the example below:

Inch:	4-21/64", Universal (H[1] series), 130° CPM-M4 = use Part No. **10284-4.3281**
Decimal:	4.4500", Universal (H[1] series), 130° CPM-M4 = use Part No. **10284-4.4500**

Universal Spade Drill Inserts

H^3 - H^9 Series | Diameter Range: 5.0001" - 8.5000"

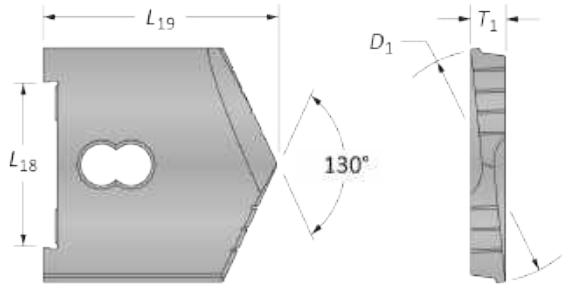

Series	D_1 inch Fraction	D_1 inch Decimal	Insert L_{18}	Insert L_{19}	Insert T_1	130° CPM-M4
H^3	5-1/8	5.1250	3-1/2	3-11/16	11/16	**10294-0504**
	5-1/4	5.2500	3-1/2	3-11/16	11/16	**10294-0508**
	5-3/8	5.3750	3-1/2	3-11/16	11/16	**10294-0512**
	5-1/2	5.5000	3-1/2	3-11/16	11/16	**10294-0516**
H^4	5-5/8	5.6250	3-1/2	3-11/16	11/16	**10294-0520**
	5-3/4	5.7500	3-1/2	3-11/16	11/16	**10294-0524**
	5-7/8	5.8750	3-1/2	3-11/16	11/16	**10294-0528**
	6	6.0000	3-1/2	3-11/16	11/16	**10294-0600**
H^5	6-1/8	6.1250	3-1/2	3-11/16	11/16	**10294-0604**
	6-1/4	6.2500	3-1/2	3-11/16	11/16	**10294-0608**
	6-3/8	6.3750	3-1/2	3-11/16	11/16	**10294-0612**
	6-1/2	6.5000	3-1/2	3-11/16	11/16	**10294-0616**
H^6	6-5/8	6.6250	3-1/2	3-11/16	11/16	**10294-0620**
	6-3/4	6.7500	3-1/2	3-11/16	11/16	**10294-0624**
	6-7/8	6.8750	3-1/2	3-11/16	11/16	**10294-0628**
	7	7.0000	3-1/2	3-11/16	11/16	**10294-0700**
H^7	7-1/8	7.1250	3-1/2	3-11/16	11/16	**10294-0704**
	7-1/4	7.2500	3-1/2	3-11/16	11/16	**10294-0708**
	7-3/8	7.3750	3-1/2	3-11/16	11/16	**10294-0712**
	7-1/2	7.5000	3-1/2	3-11/16	11/16	**10294-0716**
H^8	7-5/8	7.6250	3-1/2	3-11/16	11/16	**10294-0720**
	7-3/4	7.7500	3-1/2	3-11/16	11/16	**10294-0724**
	7-7/8	7.8750	3-1/2	3-11/16	11/16	**10294-0728**
	8	8.0000	3-1/2	3-11/16	11/16	**10294-0800**
H^9	8-1/8	8.1250	3-1/2	3-11/16	11/16	**10294-0804**
	8-1/4	8.2500	3-1/2	3-11/16	11/16	**10294-0808**
	8-3/8	8.3750	3-1/2	3-11/16	11/16	**10294-0812**
	8-1/2	8.5000	3-1/2	3-11/16	11/16	**10294-0816**

Inserts sold in multiples of 1.

A40: 32 - 33
Key on A40: 1

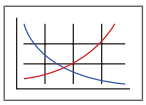

A40: 24

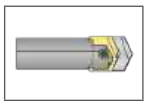

A40: 2

Sizes not shown are available upon request.
When ordering, please follow the example below:

Inch:	5-21/64", Universal (H^3 series), 130° CPM-M4 = use Part No. **10294-5.3281**
Decimal:	5.4500", Universal (H^3 series), 130° CPM-M4 = use Part No. **10294-5.4500**

Universal Spade Drill Insert Holders

H Series

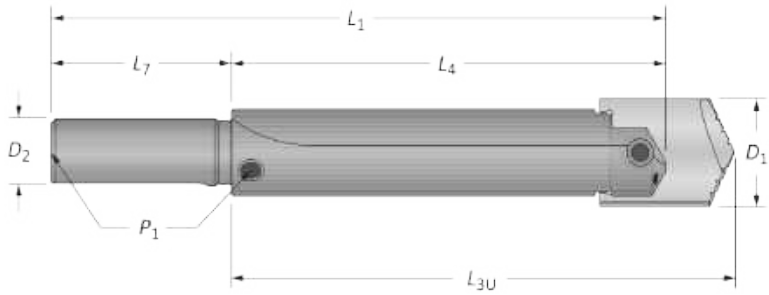

Straight Shank

	Length	D_1	L_{3U}	L_4	L_1	Shank D_2	Shank L_7	Shank P_1	Shank Style	Part No.
ⓘ	Short	4.0000 - 8.5000	8.562	7.000	13.000	2-1/2	6.000	1/2 NPT	#100	**20681-2500**
	Standard	4.0000 - 8.5000	16.562	15.000	21.000	2-1/2	6.000	1/2 NPT	#200	**20881-2500**

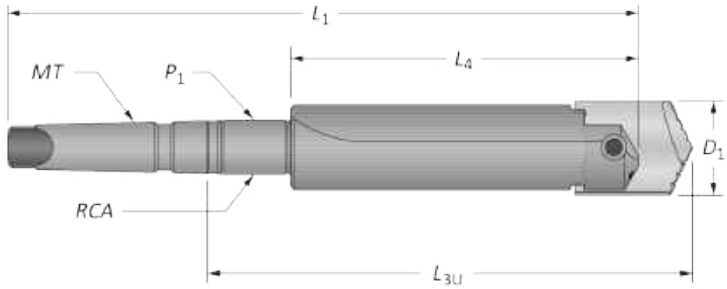

Taper Shank

	Length	D_1	L_{3U}	L_4	L_1	Shank MT	Shank P_1	Shank RCA	Shank Style	Part No.
ⓘ	Short	4.0000 - 8.5000	8.812	7.000	13.125	#5 MT	—	–	#300	**21481-0005**
	Short	4.0000 - 8.5000	11.125	7.000	15.438	#5 MT	1/2 NPT	2T-6SR	#400 SR	**21681-0005**
	Standard	4.0000 - 8.5000	19.125	15.000	23.438	#5 MT	1/2 NPT	2T-6SR	#500 SR	**21881-0005**
	Standard	4.0000 - 8.5000	19.187	15.000	25.875	#6 MT	1/2 NPT	2T-55SR	#500 SR	**21881-0006**
	Long	4.0000 - 8.5000	28.187	24.000	34.875	#6 MT	1/2 NPT	2T-55SR	#600 SR	⚠ **22081-0006**
	XL	4.0000 - 8.5000	44.187	40.000	50.875	#6 MT	1/2 NPT	2T-55SR	#700 SR	⚠ **22281-0006**

Rotary Coolant Adapter (RCA) and Accessories

	ID	OD	L_1	Driving Rod Thread	P_1	Part No.*	RCA O-Rings Kit Part No.**	RCA O-Rings Replacements
ⓘ	2.250	3.750	1.750	1/2" - 13	1/2 NPT	⚠ **2T-6SR**	2T1-6SR	2T1-6OR-10
	2.500	4.000	1.750	1/2" - 13	1/2 NPT	⚠ **2T-55SR**	2T1-55SR	2T1-55OR-10

*RCA comes complete with (1) RCA, (2) O-rings, (2) snap rings, and (2) thrust washers.
**RCA Repair Kit includes (2) O-rings, (2) snap rings, and (2) thrust washers.
⚠ Refer to page A40: 27 for proper RCA assembly and safety information.

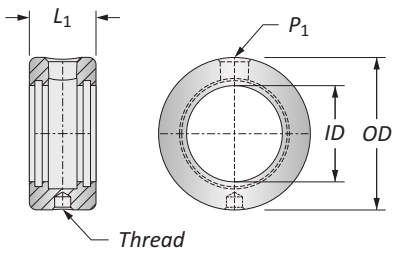

Connection Accessories

Clamping Screw Part No.	Clamping Screw Key	Blade-Loc Screw Part No.	Blade-Loc Screw Key	Pipe Plug Straight Shank Part No.	Pipe Plug Straight Shank Key	Pipe Plug MT Shank (with RCA) Part No.	Pipe Plug MT Shank (with RCA) Key
772312-1	5/8"	**724062-1**	3/16"	**710010-1**	3/8"	**710010-1**	3/8"

A40: 22 - 23

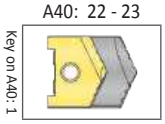

A40: 27

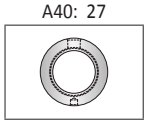

ⓘ = Imperial (in)
ⓜ = Metric (mm)
O-rings sold in packs of 10.

⚠ **WARNING** Refer to Speed and Feed charts for recommended adjustments to speeds and feeds. Refer to page A40: 34 for deep hole drilling guidelines in this section of the catalog. Visit **www.alliedmachine.com/DeepHoleGuidelines** for the most up-to-date information and procedures. Factory technical assistance is available for your specific applications through our Application Engineering Team.

High Performance Spade Drill Insert Adapters

D - H Series

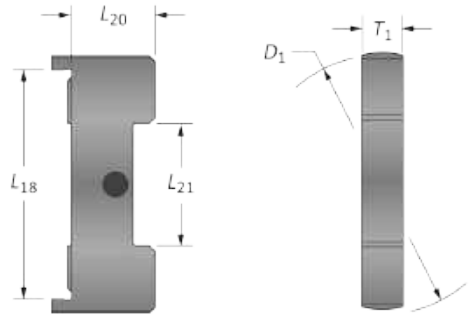

Series	D_1	Adapter L_{18}	L_{20}	L_{21}	T_1	Part No.
D	1.9950	1-3/4	43/64	15/16	3/8	**1024U-Adapter**
E	2.4950	2-1/16	21/32	1-3/16	7/16	**1025U-Adapter**
F	2.9950	2-5/8	23/32	1-1/4	1/2	**1026U-Adapter**
G	3.4950	3-1/16	25/32	1-13/16	5/8	**1027U-Adapter**
H	3.9950	3-1/2	29/32	2-1/4	11/16	**1028U-Adapter**

Step 1:
Position the adapter into the holder.

Step 2:
Slide the insert into the adapter inside the holder.

Step 3:
Insert and tighten both the clamping screw and Blade-Loc screw to secure the insert and adapter into position.

Adapter Interchangeability

- Adapters allow the use of complete spade drill insert range.
- Needed for D - H series (not required for A - C series).
- Adapter + High Performance insert combination can be interchanged with Universal insert and/or other holders.
- Manufactured to ANSI B94.49-1975 TYPE I specifications.

Connection Accessories

Blade-Loc Drill Insert Holders | Pipe Plugs

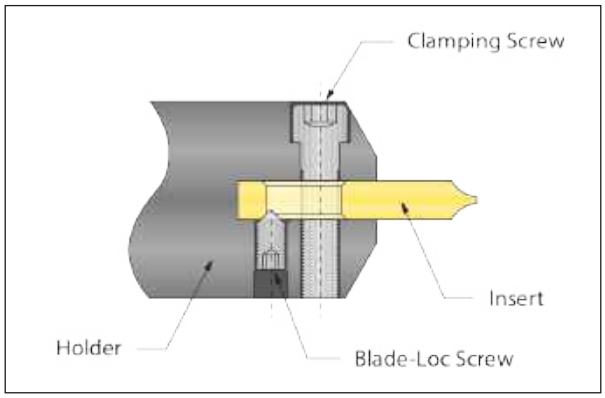

Universal Spade Drill Insert

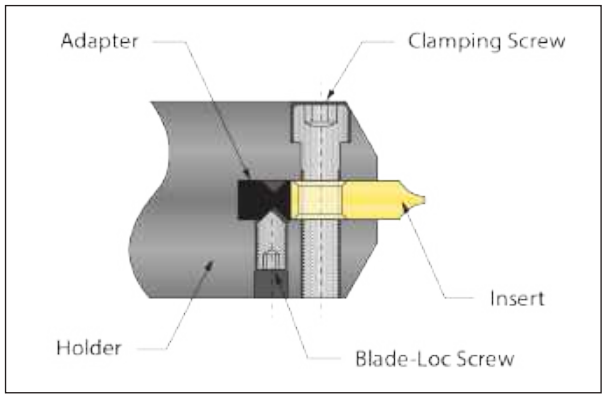

High Performance Spade Drill Insert

Blade-Loc Drill Holders - Universal

- Helps align the spade drill while locking it in place.
- Protects against tool movement during the drilling cycle and when the tool is being retracted from the hole.
- Standard feature in D - H series holders.

Blade-Loc Drill Holders - High Performance

- Secures the adapter to the holder.
- Allows inserts to be exchanged without any need to remove, clean, and reinsert the adapter.

Connection Accessories

	Clamping Screw		Blade-Loc Screw		Pipe Plug			
					Straight Shank		MT Shank (with RCA)	
Series	**Part No.**	**Key**	**Part No.**	**Key**	**Part No.**	**Key**	**Part No.**	**Key**
A	**772074-1**	5/64"	—	—	**710004-1**	5/32"	**710006-1**	7/32"
B	**772098-1**	3/16"	—	—	**710006-1**	7/32"	**710006-1**	7/32"
C	**772100-1**	3/16"	—	—	**710006-1**	7/32"	**710006-1**	7/32"
D	**772160-1**	7/16"	**724050-1**	1/8"	**710006-1**	7/32"	**710006-1**	7/32"
E	**772232-1**	3/8"	**724050-1**	1/8"	**710010-1**	3/8"	**710010-1**	3/8"
F	**772272-1**	7/16"	**724050-1**	1/8"	**710010-1**	3/8"	**710010-1**	3/8"
G	**772312-1**	5/8"	**724050-1**	1/8"	**710010-1**	3/8"	**710010-1**	3/8"
H	**772312-1**	5/8"	**724062-1**	3/16"	**710010-1**	3/8"	**710010-1**	3/8"

Rotary Coolant Adapters (RCA)

Morse Taper Shanks

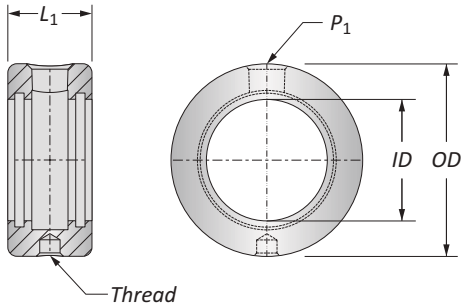

	Holder Series	*ID*	*OD*	L_1	Driving Rod Thread	P_1	Part No.*	Max Recommended RPM	RCA O-Rings Kit Part No.**	RCA O-Rings Replacements
i	A, B, C, D	1.250	2.500	1.375	3/8" - 16	1/4 NPT	⚠ **2T-4SR**	2000	2T1-4SR	2T1-4OR-10
	B, C, D	1.750	3.000	1.375	3/8" - 16	1/4 NPT	⚠ **2T-5SR**	1500	2T1-5SR	2T1-5OR-10
	E, F, G, H	2.250	3.750	1.750	1/2" - 13	1/2 NPT	⚠ **2T-6SR**	1100	2T1-6SR	2T1-6OR-10
	H	2.500	4.000	1.750	1/2" - 13	1/2 NPT	⚠ **2T-55SR**	1100	2T1-55SR	2T1-55OR-10

*RCA comes complete with (1) RCA, (2) O-rings, (2) snap rings, and (2) thrust washers.
**RCA Repair Kit includes (2) O-rings, (2) snap rings, and (2) thrust washers.
NOTE: Max recommended pressure is 600 PSI (42 bar).
NOTE: Recommendations above are based on water and oil based coolants.

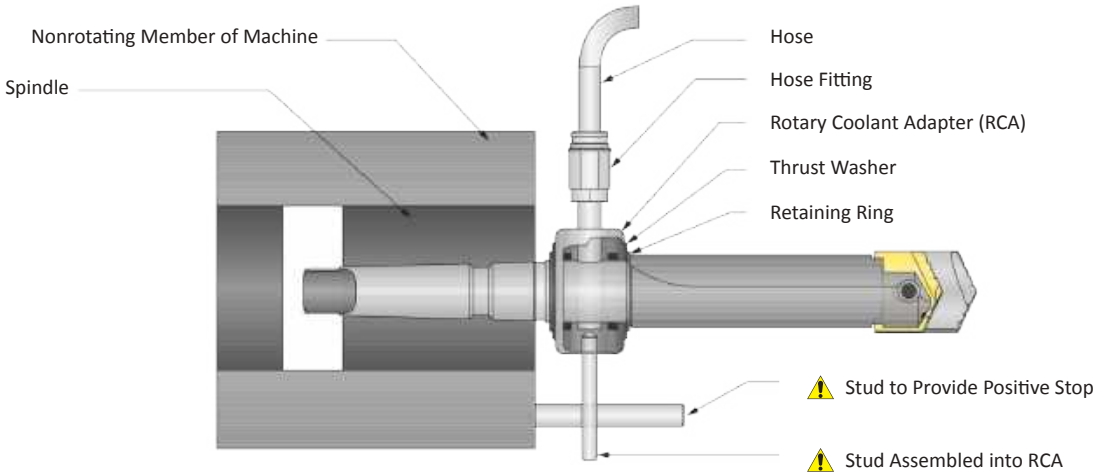

i = Imperial (in)
m = Metric (mm)
O-rings sold in packs of 10.

⚠ WARNING RCA rotation during drilling can cause hose and/or hose fitting failure, machinery damage, and/or serious injury. To prevent, use RCA and positive stop studs when drilling. Factory technical assistance is also available for your specific applications.

Regrind Charts

Universal Inserts

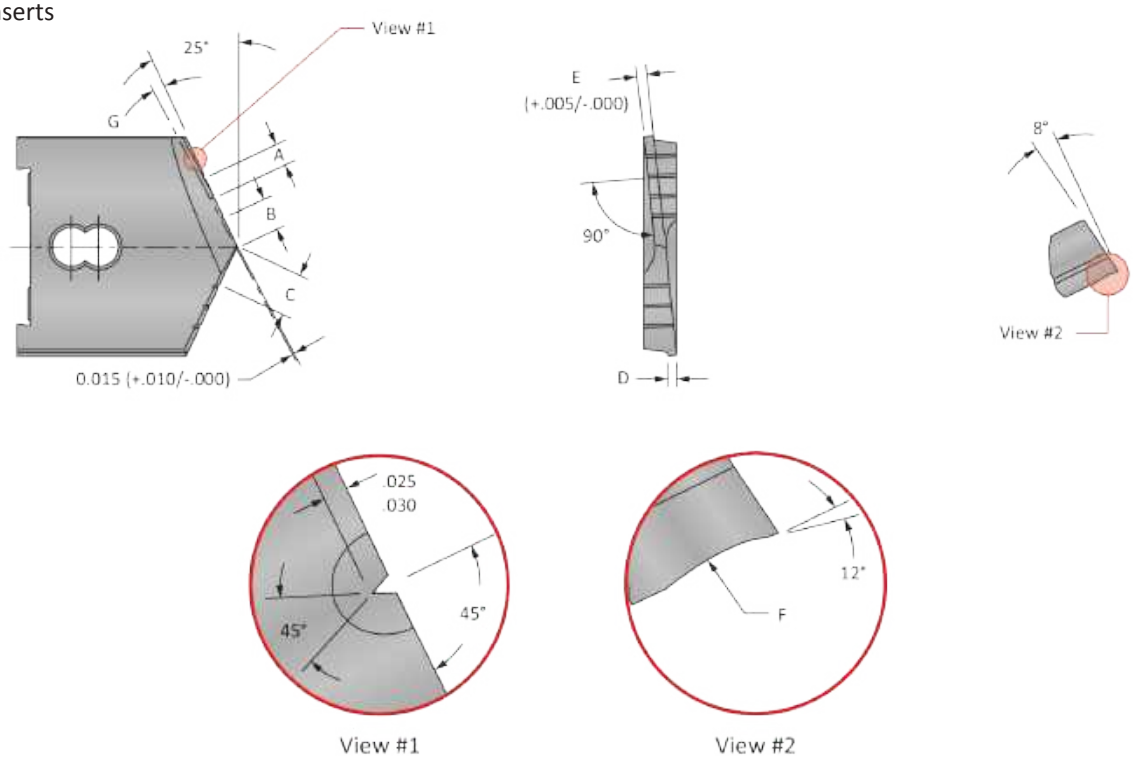

Universal (130°) Spade Drill Inserts

Series	Insert Thickness	Size Range	A	B	C	D	E	F	G
AA	1/4	1 - 1-/3/8	0.125	0.156	0.218	0.065	0.070	1/4	3°
A	3/16	31/32 - 1-3/8	0.125	0.156	0.218	0.065	0.065	1/4	3°
B	9/32	1-1/4 - 1-3/4	0.150	0.250	0.325	0.070	0.090	5/16	3°
C	5/16	1-1/2 - 2-3/8	0.200	0.250	0.350	0.080	0.100	5/16	3°
D	3/8	2 - 2-7/8	0.250	0.375	0.500	0.100	0.120	3/8	3°
E	7/16	2-1/2 - 3-3/8	0.300	0.437	0.587	0.100	0.140	3/8	3°
F	1/2	3 - 3-7/8	0.350	0.437	0.612	0.125	0.170	3/8	3°
G	5/8	3-1/2 - 4-1/2	0.350	0.500	0.675	0.140	0.200	3/8	3°
H^1 - H^2	11/16	4 - 5	0.400	0.500	0.700	0.165	0.225	1/2	3°
H^3	11/16	5-1/8 - 5-1/2	0.500	0.500	0.750	0.185	0.250	1/2	3°
H^4 - H^9	11/16	5-5/8 - 8-1/2	0.500	0.500	0.750	0.185	0.250	1/2	2°

NOTE: Maintain cutting edges of the tool within 0.001" T.I.R.

High Performance Regrinds: High Performance inserts should be reground and coated by Allied Machine before returning them to production. The real economy of High Performance spade inserts is their improved production rates (100% and 500%) and increased tool life (3 to 20 times). Factory regrinding and coating provides like-new tool performance. Our factory service reduces your total cost per hole.

Regrind Charts

Universal Inserts

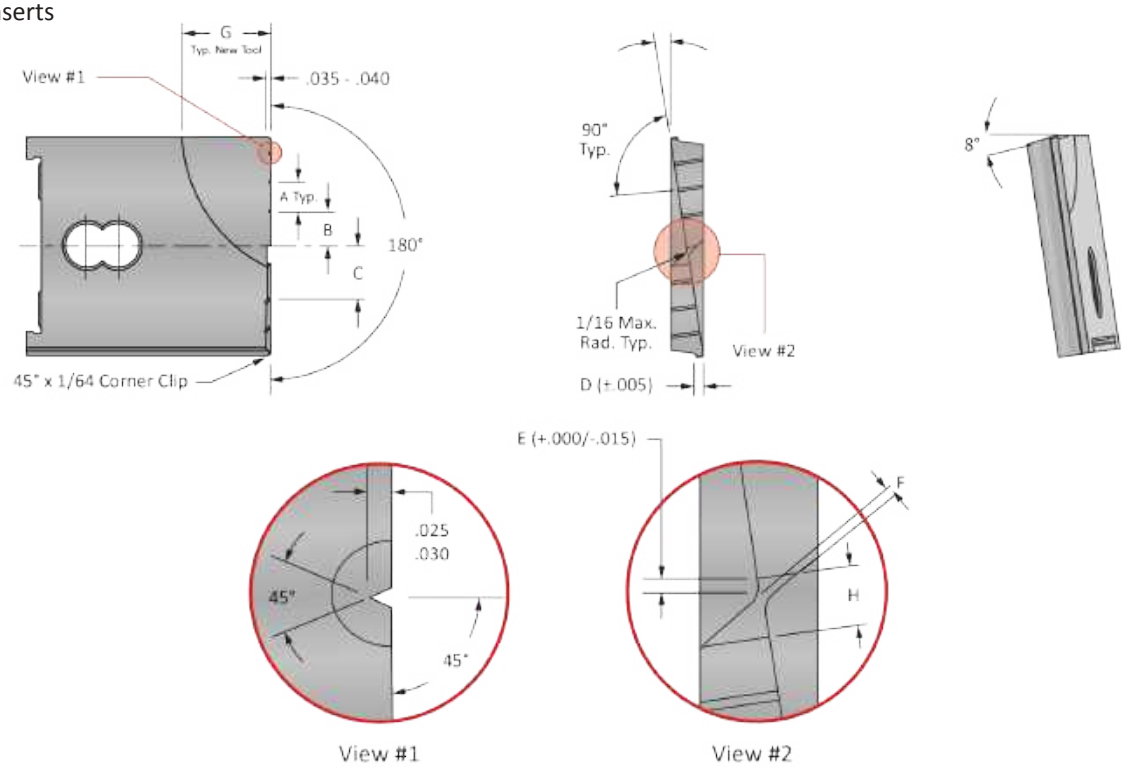

Flat Bottom Spade Drill Inserts

Series	Insert Thickness	Size Range	A	B	C	D	E	F	G	H
AA	1/4	1 - 1-/3/8	0.150	0.250	0.325	0.065	1/64 - 1/32	0.075	7/16	1/8
A	3/16	31/32 - 1-3/8	0.150	0.250	0.325	0.065	1/64 - 1/32	0.075	7/16	1/8
B	9/32	1-1/4 - 1-3/4	0.200	0.250	0.350	0.070	1/64 - 1/32	0.075	1/2	1/8
C	5/16	1-1/2 - 2-3/8	0.200	0.250	0.350	0.080	1/32 - 3/64	0.075	5/8	1/8
D	3/8	2 - 2-7/8	0.300	0.375	0.525	0.100	1/32 - 3/64	0.129	7/8	3/16
E	7/16	2-1/2 - 3-3/8	0.300	0.375	0.525	0.100	1/32 - 1/16	0.129	1-1/8	3/16
F	1/2	3 - 3-7/8	0.300	0.500	0.650	0.125	1/32 - 1/16	0.156	1-1/4	1/4
G	5/8	3-1/2 - 4-1/2	0.400	0.500	0.700	0.140	1/32 - 1/16	0.156	1-1/2	1/4
H^1 - H^2	11/16	4 - 5	0.500	0.500	0.750	0.165	1/32 - 1/16	0.156	1-1/2	1/4

NOTE: Grind cutting edge 0.005" above center line at the center of the new tool
NOTE: Maintain flatness and height across the cutting edges of the tool within 0.001" T.I.R.

Recommended Cutting Data | Imperial (inch)

High Performance Spade Inserts

ISO	Material	Hardness (BHN)	TiN SFM	TiAlN SFM	TiCN SFM	Feed Rate (IPR) by Diameter 1" - 1-1/4"	1-1/4" - 2"	2" - 3"	3" - 5"
P	**Free-Machining Steel** 1118, 1215, 12L14, etc.	100 - 150	200	280	260	0.016	0.020	0.023	0.028
		150 - 200	180	260	235	0.016	0.020	0.023	0.028
		200 - 250	160	240	210	0.016	0.020	0.023	0.028
	Low-Carbon Steel 1010, 1020, 1025, 1522, 1144, etc.	85 - 125	170	250	220	0.015	0.019	0.023	0.027
		125 - 175	160	240	210	0.015	0.019	0.023	0.027
		175 - 225	150	225	195	0.014	0.018	0.021	0.024
		225 - 275	140	210	180	0.014	0.018	0.021	0.024
	Medium-Carbon Steel 1030, 1040, 1050, 1527, 1140, 1151, etc.	125 - 175	160	240	210	0.015	0.019	0.023	0.027
		175 - 225	150	225	195	0.014	0.018	0.021	0.024
		225 - 275	140	210	180	0.014	0.018	0.021	0.024
		275 - 325	130	195	170	0.012	0.016	0.019	0.022
	Alloy Steel 4140, 5140, 8640, etc.	125 - 175	150	210	195	0.014	0.017	0.019	0.022
		175 - 225	140	195	180	0.014	0.017	0.019	0.022
		225 - 275	130	180	170	0.014	0.017	0.019	0.022
		275 - 325	120	170	155	0.012	0.015	0.017	0.020
		325 - 375	110	155	145	0.012	0.015	0.017	0.020
	High-Strength Alloy 4340, 4330V, 300M, etc.	225 - 300	80	110	100	0.010	0.014	0.017	0.020
		300 - 350	60	85	80	0.010	0.014	0.017	0.020
		350 - 400	50	70	65	0.009	0.012	0.015	0.018
	Structural Steel A36, A285, A516, etc.	100 - 150	140	200	180	0.014	0.018	0.021	0.026
		150 - 250	120	170	155	0.012	0.016	0.019	0.024
		250 - 350	100	140	130	0.010	0.014	0.017	0.020
	Tool Steel H-13, H-21, A-4, 0-2, S-3, etc.	150 - 200	80	110	105	0.010	0.012	0.015	0.017
		200 - 250	60	90	85	0.010	0.012	0.015	0.017
S	**High-Temp Alloy** Hastelloy B, Inconel 600, etc.	140 - 220	30	40	35	0.010	0.012	0.015	–
		220 - 310	25	35	30	0.008	0.010	0.012	–
M	**Stainless Steel** 303, 416, 420, 17-4 PH, etc.	135 - 185	75	105	95	0.011	0.014	0.016	0.020
		185 - 275	60	90	80	0.010	0.012	0.014	0.018
K	**Cast Iron**	120 - 150	170	250	220	0.020	0.024	0.027	0.030
		150 - 200	150	225	195	0.018	0.022	0.025	0.028
		200 - 220	130	195	170	0.016	0.018	0.021	0.024
		220 - 260	110	165	145	0.012	0.014	0.017	0.020
		260 - 320	90	135	120	0.009	0.012	0.014	0.016
N	**Aluminum**	30	600	850	750	0.020	0.022	0.025	0.025
		180	300	450	400	0.018	0.022	0.025	0.025

Deep Hole Drilling Speed and Feed Adjustment

	⚠ Holder Length	
	Long	XL
Speed	0.90	0.80
Feed	–	0.90

Recommended Speed and Feed Example

If the recommended speed and feed is 200 SFM and 0.016 IPR for a standard length holder, then the speed and feed using an XL holder in the same application would be 160 SFM and 0.014 IPR.

200 • 0.80 = 160 SFM	0.016 • 0.90 = 0.014 IPR

⚠ **WARNING** **Tool failure can cause serious injury. To prevent:**
- When using holders without support bushing, use a short length holder to establish an initial hole that is a minimum of 2 diameters deep.
- Do not rotate tool holders more than 50 RPM unless it is engaged with the workpiece or fixture.

Refer to page A40: 34 for Deep Hole Drilling Guidelines. Visit **www.alliedmachine.com/DeepHoleGuidelines** for the most up-to-date information and procedures. Factory technical assistance is available for your specific applications through our Application Engineering Team.

IMPORTANT: The speeds and feeds listed above are a general starting point for all applications. Refer to the Coolant Recommendation chart for coolant requirements to run at the recommended speeds and feeds. Factory technical assistance is available through our Application Engineering department. See adjustment examples on the following page.

Coolant Recommendations | Imperial (inch)

High Performance Spade Inserts

ISO	Material	Data Metrics	Data by Diameter 1" - 1-1/4"	1-1/4" - 2"	2" - 3"	3" - 5"
P	**Free-Machining Steel** 1118, 1215, 12L14, etc.	Hardness (BHN)	100 - 250	100 - 250	100 - 250	100 - 250
		Coolant Pressure (PSI)	105 - 150	55 - 75	45 - 60	35 - 45
		Coolant Volumetric Flow Rate (GPM)	6.3 - 7.6	15 - 18	31 - 36	47 - 53
	Low-Carbon Steel	Hardness (BHN)	85 - 275	85 - 275	85 - 275	85 - 275
		Coolant Pressure (PSI)	80 - 115	45 - 55	35 - 45	30 - 35
		Coolant Volumetric Flow Rate (GPM)	5.5 - 6.6	14 - 15	28 - 31	43 - 46
	Medium-Carbon Steel	Hardness (BHN)	125 - 325	125 - 325	125 - 325	125 - 325
		Coolant Pressure (PSI)	70 - 100	40 - 50	35 - 40	30 - 35
		Coolant Volumetric Flow Rate (GPM)	5.2 - 6.2	13 - 15	28 - 30	43 - 46
	Alloy Steel	Hardness (BHN)	125 - 375	125 - 375	125 - 375	125 - 375
		Coolant Pressure (PSI)	60 - 85	30 - 40	30 - 35	25 - 30
		Coolant Volumetric Flow Rate (GPM)	4.8 - 5.7	11 - 13	26 - 28	39 - 43
	High-Strength Alloy 4340, 4330V, 300M, etc.	Hardness (BHN)	225 - 400	225 - 400	225 - 400	225 - 400
		Coolant Pressure (PSI)	25 - 30	20 - 25	20 - 25	20 - 25
		Coolant Volumetric Flow Rate (GPM)	3.1 - 3.4	9 - 10	21 - 23	35 - 39
	Structural Steel A36, A285, A516, etc.	Hardness (BHN)	100 - 350	100 - 350	100 - 350	100 - 350
		Coolant Pressure (PSI)	50 - 70	30 - 35	25 - 30	25 - 30
		Coolant Volumetric Flow Rate (GPM)	4.4 - 5.2	11 - 12	23 - 26	39 - 43
	Tool Steel H-13, H-21, A-4, 0-2, S-3, etc.	Hardness (BHN)	150 - 250	150 - 250	150 - 250	150 - 250
		Coolant Pressure (PSI)	25 - 30	20 - 25	20 - 25	20 - 25
		Coolant Volumetric Flow Rate (GPM)	3.1 - 3.4	9 - 10	21 - 23	35 - 43
S	**High-Temp Alloy** Hastelloy B, Inconel 600, etc.	Hardness (BHN)	140 - 310	140 - 310	140 - 310	140 - 310
		Coolant Pressure (PSI)	35 - 40	25 - 30	25 - 30	–
		Coolant Volumetric Flow Rate (GPM)	3.6 - 3.9	10 - 11	23 - 26	–
M	**Stainless Steel** 303, 416, 420, 17-4 PH, etc.	Hardness (BHN)	135 - 275	135 - 275	135 - 275	135 - 275
		Coolant Pressure (PSI)	50 - 65	30 - 35	25 - 30	25 - 30
		Coolant Volumetric Flow Rate (GPM)	4.4 - 5.0	11 - 12	23 - 26	39 - 43
K	**Cast Iron**	Hardness (BHN)	120 - 320	120 - 320	120 - 320	120 - 320
		Coolant Pressure (PSI)	40 - 50	25 - 30	25 - 30	20 - 25
		Coolant Volumetric Flow Rate (GPM)	3.9 - 4.4	10 - 11	23 - 26	35 - 43
N	**Aluminum**	Hardness (BHN)	30 - 180	30 - 180	30 - 180	30 - 180
		Coolant Pressure (PSI)	150 - 220	80 - 115	60 - 80	55 - 70
		Coolant Volumetric Flow Rate (GPM)	7.6 - 9.1	19 - 22	36 - 42	59 - 66

Deep Hole Drilling Speed and Feed Adjustment

	⚠ Holder Length	
	Long	XL
Pressure and Flow	1.3	2

Recommended Speed and Feed Example

If the recommended pressure and flow is 150 PSI and 6.3 GPM for a standard length holder, then the adjusted pressure and flow using an XL holder in the same application would be 300 PSI and 12.6 GPM.

150 • 2 = 300 PSI	6.3 • 2 = 12.6 GPM

⚠ **WARNING** **Tool failure can cause serious injury. To prevent:**
- When using holders without support bushing, use a short length holder to establish an initial hole that is a minimum of 2 diameters deep.
- Do not rotate tool holders more than 50 RPM unless it is engaged with the workpiece or fixture.

Refer to page A40: 34 for Deep Hole Drilling Guidelines. Visit **www.alliedmachine.com/DeepHoleGuidelines** for the most up-to-date information and procedures. Factory technical assistance is available for your specific applications through our Application Engineering Team.

IMPORTANT: The coolant pressure and flow rate recommendation below represents a good approximation to obtain optimum tool life and chip evacuation at the recommended speeds and feeds. If lower coolant capabilities exist in a drilling application, the HP/Universal drilling system will still function at reduced penetration rates. Contact our Application Engineering department for more specific recommendations of coolant requirements and/or speeds and feeds.

Recommended Cutting Data | Imperial (inch)

Universal Spade Inserts

ISO	Material	Hardness (BHN)	SFM	Feed Rate (IPR) by Diameter 1" - 1-1/4"	1-1/4" - 2"	2" - 3"	3" - 5"
P	**Free-Machining Steel** 1118, 1215, 12L14, etc.	100 - 150	100	0.014	0.016	0.020	0.024
		150 - 200	90	0.013	0.015	0.019	0.022
		200 - 250	80	0.012	0.014	0.018	0.020
	Low-Carbon Steel 1010, 1020, 1025, 1522, 1144, etc.	85 - 125	80	0.012	0.015	0.018	0.020
		125 - 175	75	0.012	0.014	0.017	0.020
		175 - 225	60	0.010	0.014	0.016	0.018
		225 - 275	55	0.010	0.013	0.016	0.018
	Medium-Carbon Steel 1030, 1040, 1050, 1527, 1140, 1151, etc.	125 - 175	65	0.010	0.014	0.018	0.020
		175 - 225	60	0.010	0.014	0.016	0.020
		225 - 275	50	0.008	0.013	0.016	0.018
		275 - 325	45	0.008	0.012	0.014	0.016
	Alloy Steel 4140, 5140, 8640, etc.	125 - 175	60	0.010	0.014	0.018	0.020
		175 - 225	55	0.010	0.014	0.016	0.020
		225 - 275	45	0.008	0.013	0.016	0.018
		275 - 325	35	0.008	0.012	0.014	0.016
		325 - 375	30	0.008	0.012	0.014	0.016
	High-Strength Alloy 4340, 4330V, 300M, etc.	225 - 300	40	0.008	0.012	0.014	0.016
		300 - 350	30	0.006	0.010	0.014	0.016
		350 - 400	25	0.006	0.008	0.014	0.016
	Structural Steel A36, A285, A516, etc.	100 - 150	70	0.012	0.016	0.018	0.020
		150 - 250	60	0.010	0.014	0.016	0.018
		250 - 350	50	0.008	0.012	0.014	0.016
	Tool Steel H-13, H-21, A-4, 0-2, S-3, etc.	150 - 200	50	0.009	0.011	0.014	0.016
		200 - 250	40	0.008	0.010	0.013	0.015
S	**High-Temp Alloy** Hastelloy B, Inconel 600, etc.	140 - 220	20	0.008	0.010	0.012	–
		220 - 310	15	0.007	0.009	0.011	–
M	**Stainless Steel** 303, 416, 420, 17-4 PH, etc.	135 - 185	45	0.008	0.012	0.015	0.018
		185 - 275	35	0.007	0.010	0.013	0.016
K	**Cast Iron**	120 - 150	100	0.016	0.020	0.022	0.025
		150 - 200	80	0.015	0.018	0.020	0.022
		200 - 220	70	0.011	0.014	0.018	0.020
		220 - 260	60	0.008	0.012	0.015	0.017
		260 - 320	45	0.008	0.010	0.012	0.014
N	**Aluminum**	30	275	0.018	0.026	0.032	0.042
		180	200	0.018	0.026	0.032	0.042

Deep Hole Drilling Speed and Feed Adjustment

	⚠ Holder Length	
	Long	XL
Speed	0.90	0.80
Feed	–	0.90

Recommended Speed and Feed Example

If the recommended speed and feed is 100 SFM and 0.016 IPR for a standard length holder, then the speed and feed using an XL holder in the same application would be 80 SFM and 0.014 IPR.

100 • 0.80 = 80 SFM	0.016 • 0.90 = 0.014 IPR

⚠ **WARNING** **Tool failure can cause serious injury. To prevent:**
- When using holders without support bushing, use a short length holder to establish an initial hole that is a minimum of 2 diameters deep.
- Do not rotate tool holders more than 50 RPM unless it is engaged with the workpiece or fixture.

Refer to page A40: 34 for Deep Hole Drilling Guidelines. Visit **www.alliedmachine.com/DeepHoleGuidelines** for the most up-to-date information and procedures. Factory technical assistance is available for your specific applications through our Application Engineering Team.

IMPORTANT: The speeds and feeds listed above are a general starting point for all applications. Refer to the Coolant Recommendation chart for coolant requirements to run at the recommended speeds and feeds. Factory technical assistance is available through our Application Engineering department. See adjustment examples on the following page.

Coolant Recommendations | Imperial (inch)

Universal Spade Inserts

ISO	Material	Data Metrics	Data by Diameter 1" - 1-1/4"	1-1/4" - 2"	2" - 3"	3" - 5"
P	**Free-Machining Steel** 1118, 1215, 12L14, etc.	Hardness (BHN)	100 - 250	100 - 250	100 - 250	100 - 250
		Coolant Pressure (PSI)	40	25	25	20
		Coolant Volumetric Flow Rate (GPM)	3.9	10	23	35
	Low-Carbon Steel	Hardness (BHN)	85 - 275	85 - 275	85 - 275	85 - 275
		Coolant Pressure (PSI)	30	20	20	20
		Coolant Volumetric Flow Rate (GPM)	3.4	9	21	35
	Medium-Carbon Steel	Hardness (BHN)	125 - 325	125 - 325	125 - 325	125 - 325
		Coolant Pressure (PSI)	25	20	20	20
		Coolant Volumetric Flow Rate (GPM)	3.1	9	21	35
	Alloy Steel	Hardness (BHN)	125 - 375	125 - 375	125 - 375	125 - 375
		Coolant Pressure (PSI)	20	20	20	20
		Coolant Volumetric Flow Rate (GPM)	2.8	9	21	35
	High-Strength Alloy 4340, 4330V, 300M, etc.	Hardness (BHN)	225 - 400	225 - 400	225 - 400	225 - 400
		Coolant Pressure (PSI)	25	20	20	20
		Coolant Volumetric Flow Rate (GPM)	3.1	9	21	35
	Structural Steel A36, A285, A516, etc.	Hardness (BHN)	100 - 350	100 - 350	100 - 350	100 - 350
		Coolant Pressure (PSI)	25	20	20	20
		Coolant Volumetric Flow Rate (GPM)	3.1	9	21	35
	Tool Steel H-13, H-21, A-4, 0-2, S-3, etc.	Hardness (BHN)	150 - 250	150 - 250	150 - 250	150 - 250
		Coolant Pressure (PSI)	25	20	20	20
		Coolant Volumetric Flow Rate (GPM)	3.1	9	21	35
S	**High-Temp Alloy** Hastelloy B, Inconel 600, etc.	Hardness (BHN)	140 - 310	140 - 310	140 - 310	140 - 310
		Coolant Pressure (PSI)	25	20	20	20
		Coolant Volumetric Flow Rate (GPM)	3.1	9	21	35
M	**Stainless Steel** 303, 416, 420, 17-4 PH, etc.	Hardness (BHN)	135 - 275	135 - 275	135 - 275	135 - 275
		Coolant Pressure (PSI)	25	25	20	20
		Coolant Volumetric Flow Rate (GPM)	3.1	10	21	35
K	**Cast Iron**	Hardness (BHN)	120 - 320	120 - 320	120 - 320	120 - 320
		Coolant Pressure (PSI)	25	20	20	20
		Coolant Volumetric Flow Rate (GPM)	3.1	9	21	35
N	**Aluminum**	Hardness (BHN)	30 - 180	30 - 180	30 - 180	30 - 180
		Coolant Pressure (PSI)	55	35	30	30
		Coolant Volumetric Flow Rate (GPM)	4.6	12	26	40

Deep Hole Drilling Speed and Feed Adjustment

	⚠ Holder Length	
	Long	XL
Pressure and Flow	1.3	2

Recommended Speed and Feed Example

If the recommended pressure and flow is 150 PSI and 6.3 GPM for a standard length holder, then the adjusted pressure and flow using an XL holder in the same application would be 300 PSI and 12.6 GPM.

150 • 2 = 300 PSI	6.3 • 2 = 12.6 GPM

⚠ **WARNING** **Tool failure can cause serious injury. To prevent:**
- When using holders without support bushing, use a short length holder to establish an initial hole that is a minimum of 2 diameters deep.
- Do not rotate tool holders more than 50 RPM unless it is engaged with the workpiece or fixture.

Refer to page A40: 34 for Deep Hole Drilling Guidelines. Visit **www.alliedmachine.com/DeepHoleGuidelines** for the most up-to-date information and procedures. Factory technical assistance is available for your specific applications through our Application Engineering Team.

IMPORTANT: The coolant pressure and flow rate recommendation below represents a good approximation to obtain optimum tool life and chip evacuation at the recommended speeds and feeds. If lower coolant capabilities exist in a drilling application, the HP/Universal drilling system will still function at reduced penetration rates. Contact our Application Engineering department for more specific recommendations of coolant requirements and/or speeds and feeds.

Deep Hole Drilling Guidelines

1. Pilot Hole
100% RPM
100% IPR (mm/rev)

Establish the pilot hole using the same diameter short drill to a depth of 2xD minimum.
Utilize a pilot drill with the same or larger included point angle.

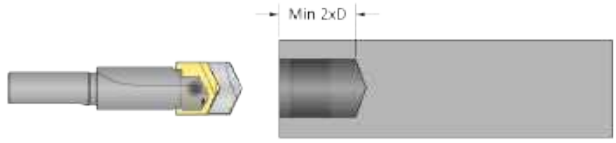

Coolant ON

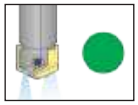

2. Feed-in
50 RPM max
12 IPM (300 mm/min)

Feed the longer drill within 1/16" (1.5 mm) short of the established pilot hole bottom at a **maximum of 50 RPM** and 12 IPM (300 mm/min) feed rate.

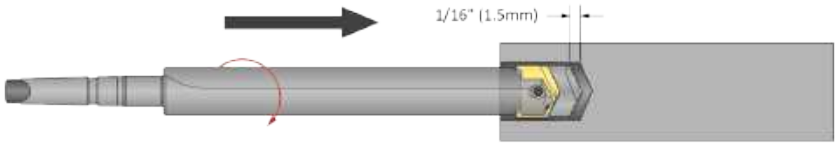

Coolant OFF

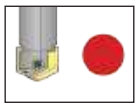

3. Deep Hole Transition Drilling
50% RPM
75% IPR (mm/rev)

Drill additional 1xD past the bottom of the pilot hole at 50% reduction of recommended speed and 25% reduction of recommended feed.
Minimum of 1 second dwell is required to meet full speed before feeding.

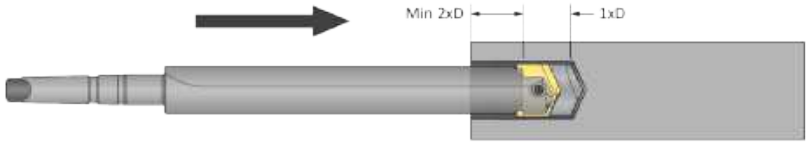

Coolant ON

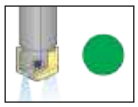

4. Deep Hole Drilling - Blind
100% RPM
100% IPR (mm/rev)

Drill to full depth at recommended speed and feed for longer drill according to Allied speed and feed charts.
No peck cycle recommended.

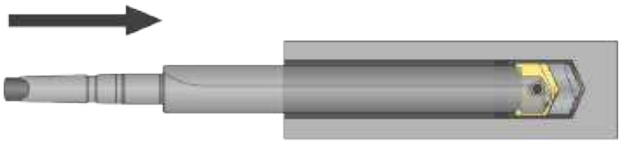

Coolant ON

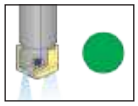

5. Deep Hole Drilling - at Breakout
50% RPM
75% IPR (mm/rev)

For through holes only:
Reduce speed by 50% and feed by 25% prior to breakout.
Do not break out more than 1/8" (3 mm) past the full diameter of the drill.

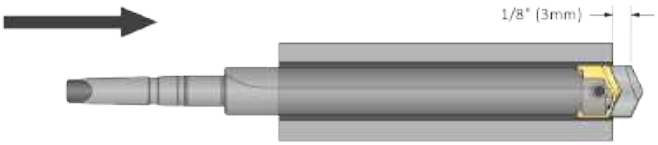

Coolant ON

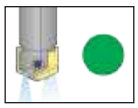

6. Drill Retract
50 RPM max

Reduce speed to a **maximum of 50 RPM** before retracting from the hole.

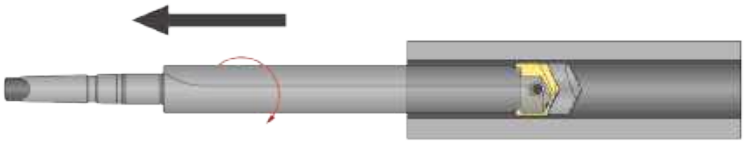

Coolant OFF

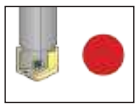

⚠ WARNING **Tool failure can cause serious injury. To prevent:**
- When using holders without support bushing, use a short length holder to establish an initial hole that is a minimum of 2 diameters deep.
- Do not rotate tool holders more than 50 RPM unless it is engaged with the workpiece or fixture.

Visit **www.alliedmachine.com/DeepHoleGuidelines** for the most up-to-date information and procedures. Factory technical assistance is available for your specific applications through our Application Engineering Team.

Notes

SECTION

A50

APX™ Drill

APX™ Drill

Deep Hole / Large Diameter Drilling System

- **Diameter Range:** 1.299" - 4.000" (33.00 mm - 101.60 mm)

Don’t Let Your Machine Slow You Down

The APX deep hole/large diameter drilling system delivers the strength and versatility needed for any deep hole drilling application. The breakthrough geometry is designed to increase penetration rates and tool life. By allowing for higher spindle speeds, the APX lets you take advantage of the power curve on modern CNC machines.

Excellent chip control.	Improves hole quality and surface finish.	Provides maximum durability and stability.

Applicable Industries

Aerospace · Agriculture · Automotive · Firearms · General Machining · Oil & Gas · Renewable Energy

Your safety and the safety of others is very important. This catalog contains important safety messages. Always read and follow all safety precautions.

This triangle is a safety hazard symbol. It alerts you to potential safety hazards that can cause tool failure and serious injury.

When you see this symbol in the catalog, look for a related safety message that may be near this triangle or referred to in the nearby text.

There are safety signal words also used in the catalog. Safety messages follow these words.

WARNING

WARNING (shown above) means that failure to follow the precautions in this message could result in tool failure and serious injury.

NOTICE means that failure to follow the precautions in this message could result in damage to the tool or machine but not result in personal injury.

NOTE and **IMPORTANT** are also used. These are important that you read and follow but are not safety-related.

Visit www.alliedmachine.com for the most up-to-date information and procedures.

Reference Icons
The following icons will appear throughout the catalog to help you navigate between products.

Setup / Assembly Information
Detailed instructions and information regarding the corresponding part(s)

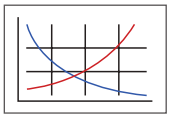

Recommended Cutting Data
Speed and feed recommendations for optimum and safe drilling

GEN3SYS® Pilot Inserts
Lists the GEN3SYS XT Pro pilot ISO insert options for each APX drill series

T-A® Pilot Inserts
Lists the T-A® and GEN2 T-A® pilot insert options for each APX Drill series

Coolant-Through Option
Indicates that the product is coolant through

Series	Diameter Range	
	Imperial (inch)	Metric (mm)
33	1.299 - 1.496	33.00 - 37.99
38	1.496 - 1.732	38.00 - 43.99
44	1.732 - 2.008	44.00 - 50.99
51	2.008 - 2.244	51.00 - 56.99
57	2.244 - 2.480	57.00 - 62.99
63	2.480 - 2.756	63.00 - 69.99
70	2.756 - 2.992	70.00 - 75.99
76	2.992 - 3.268	76.00 - 82.99
83	3.268 - 3.504	83.00 - 88.99
89	3.504 - 3.740	89.00 - 94.99
95	3.740 - 4.000	95.00 - 101.60

APX™ Drill Contents

Introduction Information

Drill Selection Guide / Assembly Details . . . . . 2 - 3
Pilot Insert Options / Details 4
Product Nomenclature 5

Drill Series

33 Series . . . . . 6 - 7
38 Series . . . . . 8 - 9
44 Series . . . . . 10 - 11
51 Series . . . . . 12 - 13
57 Series . . . . . 14 - 15
63 Series . . . . . 16 - 17
70 Series . . . . . 18 - 19
76 Series . . . . . 20 - 21
83 Series . . . . . 22 - 23
89 Series . . . . . 24 - 25
95 Series . . . . . 26 - 27

Recommended Cutting Data

Imperial (inch) 28
Metric (mm) 29
Deep Hole Drilling Guidelines 30

Drill Selection Guide

Series	33	38	44	51	57
Page	6 - 7	8 - 9	10 - 11	12 - 13	14 - 15
D_5 inch	1.299 - 1.496	1.496 - 1.732	1.732 - 2.008	2.008 - 2.244	2.244 - 2.480
D_5 mm	33.00 - 37.99	38.00 - 43.99	44.00 - 50.99	51.00 - 56.99	57.00 - 62.99
ISO Material	P S M H K N	P S M H K N	P S M H K N	P S M H K N	P S M H K N
IC Insert Shape					
IC Insert Size (inch)	5/16"	3/8"	3/8", 1/2"	1/2", 9/16"	9/16"
IC Insert Size (mm)	7.94	9.53	9.53, 12.70	12.70, 14.29	14.29
Wear Pads	NO	NO	NO	NO	NO
Holders					
Drill Depth (inch)	4-7/16 - 14-29/32	5-1/8 - 17-1/4	6 - 20-1/8	6-3/8 - 22-3/8	7-1/8 - 24-3/4
Drill Depth (mm)	112.6 - 378.6	130.5 - 439.9	151.5 - 510.0	161.8 - 570.0	179.9 - 626.9
Pilot Insert					
T-A Series	0, 1	0, 1	1	1	1, 2
GEN3SYS XT Pro Series	–	15, 17, 18, 20	17, 18, 22	18, 20, 22	22, 24, 26

T-A® Style Pilot Insert Head

- Utilizes both T-A Pro and T-A inserts (0 - 2 series).
- Multiple geometry options are available to achieve optimal results in different types of applications.

GEN3SYS® XT Style Pilot Insert Head

- Utilizes GEN3SYS XT Pro inserts (15 - 32 series).
- ISO geometry options are available to achieve optimal results in different types of applications.

IC Insert AM300®

- The design allows for excellent chip control and aggressive penetration rates.
- The proprietary AM300 coatings increase tool life above competitors' premium coatings.

Insert Application Recommendations

Carbide Grade Options	
C5 (P35)	General purpose carbide grade suitable for most applications. ▶ *Common application in steels and stainless steels.*
C1 (K35)	Toughest carbide grade. Provides the best combination of edge strength and tool life. ▶ *Recommended for less rigid applications.*
C2 (K25)	Higher wear-resistant carbide suitable for abrasive material applications. ▶ *Recommended for grey, ductile, and nodular irons.*
Additional Geometry Option	
High Rake (HR)	Provides superior chip control and tool life in long-chipping carbon and alloy steels below 200 BHN.

Flanged Straight Shank

CAT40 / CAT50 Integral Shank

63	70	76	83	89	95
16 - 17	18 - 19	20 - 21	22 - 23	24 - 25	26 - 27
2.480 - 2.756	2.756 - 2.992	2.992 - 3.268	3.268 - 3.504	3.504 - 3.740	3.740 - 4.000
63.00 - 69.99	70.00 - 75.99	76.00 - 82.99	83.00 - 88.99	89.00 - 94.99	95.00 - 101.60
P S M H K N	P S M H K N	P S M H K N	P S M H K N	P S M H K N	P S M H K N
9/16"	3/8"	1/2"	1/2"	9/16"	9/16"
14.29	9.53	12.70	12.70	14.29	14.29
NO	YES	YES	YES	YES	YES
7-7/8 - 27-1/8	8-3/4 - 27-7/8	9-1/2 - 26-1/8	10-1/8 - 27-3/4	10-7/8 - 27-5/8	11-7/8 - 27-1/2
200.8 - 688.3	218.8 - 709.4	239.9 - 664.0	257.8 - 704.9	275.8 - 701.8	302.0 - 698.5
2	2	2	2	2	2
26, 29, 32	29	29	32	29	32

ASSEMBLY

Step 1:

Lower the APX head assembly onto the APX holder.

Step 2:

Insert the head mounting screws into points A and B. Tighten until the head is properly secured to the holder.

Step 3:

Tighten with the head mounting driver using the torque setting chart below.

Torque Setting Chart

Series	Screw	Driver		Torque
33 - 63	75020-IP20-1		8IP-20	60 in-lb (678 N-cm)
70 - 95	78027-IP30-1	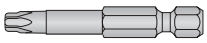	8IP-30B	250 in-lb (2825 N-cm)

Pilot Insert Options

T-A® Pilot Inserts

T-A Pro P - Steels

- Designed to provide increased penetration rates and tool life in steel applications.
- Superior geometry and edge provides excellent chip control.
- Allied's multilayer AM300® coating increases heat resistance and improves tool life.

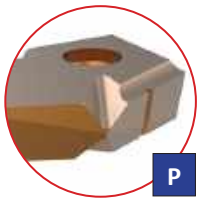

T-A Pro K - Cast Irons

- Uniquely designed for cast/ductile iron applications.
- Geometry developed for maximum tool life, reduced exit burr, and improved hole finish.
- Allied's multilayer TiAlN coating provides increased abrasion resistance and tool life.

T-A Pro N - Nonferrous Materials

- Designed for applications in aluminum, brass, and copper.
- The geometry yields excellent chip control in these softer materials.
- TiCN coating gives the versatility to run in a variety of materials while reducing buildup.

T-A Pro M - Stainless Steel

- Designed for all stainless steels and heat-resistant superalloys.
- Geometry optimized for improved chip formation while minimizing exit burr.
- Allied's new AM460 coating provides industry leading tool life in stainless and HRSA materials.

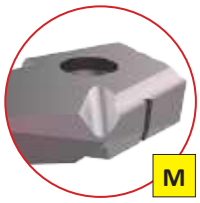

T-A Pro X - High-Speed Steel Materials

- Improved chip geometry for excellent chip control in all materials.
- Long tool life and high-process security for the most challenging applications.
- Allied's multilayer AM200® coating combines excellent heat resistance and high lubricity for wide application use.

T-A Standard

- Excellent choice for general purpose use.
- Provides fast penetration rates that produce good hole size and finish.
- Combines highly efficient, stable cutting action to minimize power consumption.

T-A Tiny Chip (-TC)

- Unique lip and point design for excellent chip control.
- Improved capabilities in long-chipping materials such as low-carbon steels and soft alloy steels.
- Enhanced performance in lower-powered machines for better chip formation at lower feed rates.

T-A High Impact (-HI)

- Designed to enhance chip formation in materials with high elasticity/ductility and poor chip forming characteristics.
- SK2 corner preparation for increased tool life.
- Improves chip formation in structural, cast, and forged steels.

GEN3SYS® XT Pro Pilot Inserts

P - Steels

- Designed to provide increased penetration rates and tool life in steel applications.
- Superior geometry and edge provides excellent chip control.
- Allied's multilayer AM420 coating increases heat resistance and improves tool life.

K - Cast Irons

- Uniquely designed for cast/nodular iron applications.
- Geometry includes a corner radius for improved hole finish and heat dispersion.
- Allied's multilayer AM440 coating provides increased abrasion resistance and tool life.

N - Nonferrous Materials

- Designed for applications in aluminum, brass, and copper.
- The geometry yields excellent chip control in these softer materials.
- TiN coating gives the versatility to run in a variety of materials while reducing buildup.

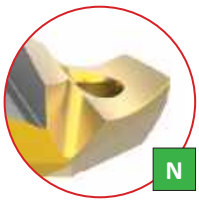

NOTE: For a complete offering of pilot inserts, see sections **A20** (GEN3SYS Drilling Systems), **A25** (T-A Pro Drilling Systems) and **A30** (T-A Drilling Systems) of our catalog.

Product Nomenclature

APX Drill Heads

V	38	15	D	–	0116
1	2	3	4		5

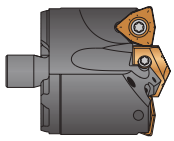

1. APX Head
V = Head

2. Series	
33 = 33 series	**70** = 70 series
38 = 38 series	**76** = 76 series
44 = 44 series	**83** = 83 series
51 = 51 series	**89** = 89 series
57 = 57 series	**95** = 95 series
63 = 63 series	

3. Pilot Series		
T-A® Pilot Insert	**GEN3SYS® XT Pro Pilot Insert**	
00 = 0 series	**15** = 15 series	**24** = 24 series
01 = 1 series	**17** = 17 series	**26** = 26 series
02 = 2 series	**18** = 18 series	**29** = 29 series
	20 = 20 series	**32** = 32 series
	22 = 22 series	

4. Effective Cutting
D = Double effective
S = Single effective

5. Major Diameter
0116 = Inch
1.5153 = Decimal
68 = Metric

Ordering Nonstocked Diameters:

Nonstocked diameters are also available. Please refer to the price list for applicable process fees. Follow the ordering examples below:

- Inch: 38 series, T-A (1 series), 1.6790" = **V3801D-1.6790**
- Metric: 38 series, T-A (1 series), 42.15 mm = **V3801D-42.15**

APX Drill Holders

W	38	05	H	–	200F
1	2	3	4		5

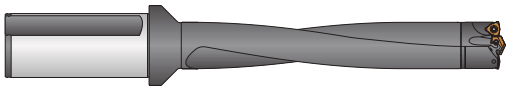

1. APX Holder
W = Holder

2. Series	
33 = 33 series	**70** = 70 series
38 = 38 series	**76** = 76 series
44 = 44 series	**83** = 83 series
51 = 51 series	**89** = 89 series
57 = 57 series	**95** = 95 series
63 = 63 series	

3. Drill Length
03 = 3xD
05 = 5xD
08 = 8xD
10 = 10xD

4. Flute Style
H = Helical

5. Shank
150F = 1-1/2" flanged straight shank
200F = 2" flanged straight shank
40FM = 40 mm flanged straight shank
50FM = 50 mm flanged straight shank
CV40 = CAT40 integral shank
CV50 = CAT50 integral shank

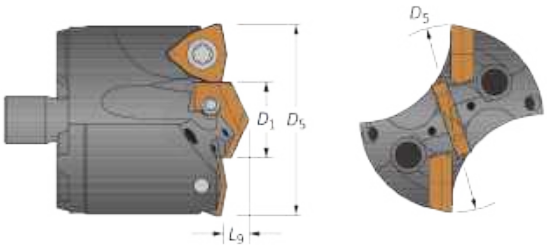

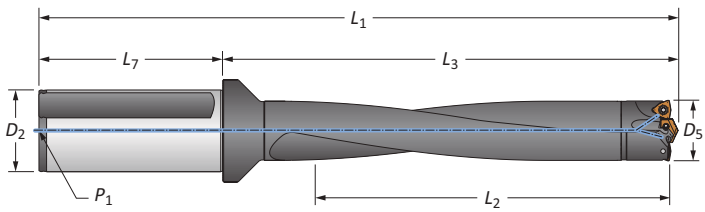

Reference Key

Symbol	Attribute
D_1	Pilot insert diameter
D_5	Major cutting diameter
L_9	Pilot insert length

Reference Key

Symbol	Attribute	Symbol	Attribute
D_2	Shank diameter	L_3	Holder reference length
D_5	Drill diameter range	L_7	Shank length
L_1	Overall length	P_1	Rear pipe tap
L_2	Drill depth		

APX Drill Heads

33 Series | Diameter Range: 1.299" - 1.496" (33.00 mm - 37.99 mm)

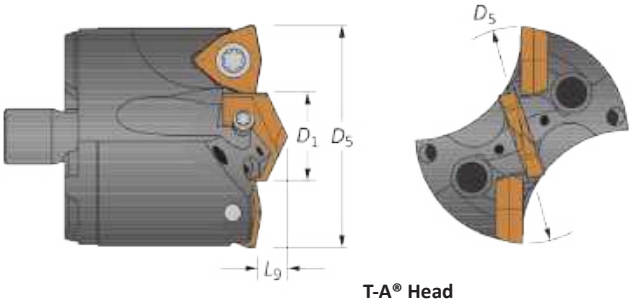

T-A® Head

Heads

Head					T-A Head				IC Insert Size	
D_5 fractional	D_5 inch	D_5 metric	D_1	L_9	Part No.	Pilot Series	T-A Pro Insert	T-A (-TC) Insert	inch	metric
-	1.299	33.00	16	7/32	**V3300D-33**	0	TA#0-16.00	1C10H-16-TC	5/16	7.94
1-5/16	1.313	33.34	16	7/32	**V3300D-0110**	0	TA#0-16.00	1C10H-16-TC	5/16	7.94
-	1.339	34.00	18	15/64	**V3301D-34**	1	TA#1-18.00	1C11H-18-TC	5/16	7.94
1-11/32	1.344	34.13	18	15/64	**V3301D-0111**	1	TA#1-18.00	1C11H-18-TC	5/16	7.94
1-3/8	1.375	34.93	18	15/64	**V3301D-0112**	1	TA#1-18.00	1C11H-18-TC	5/16	7.94
-	1.378	35.00	18	15/64	**V3301D-35**	1	TA#1-18.00	1C11H-18-TC	5/16	7.94
1-13/32	1.406	35.72	18	15/64	**V3301D-0113**	1	TA#1-18.00	1C11H-18-TC	5/16	7.94
-	1.417	36.00	20	1/4	**V3301D-36**	1	TA#1-20.00	1C11H-20-TC	5/16	7.94
1-7/16	1.438	36.51	20	1/4	**V3301D-0114**	1	TA#1-20.00	1C11H-20-TC	5/16	7.94
-	1.457	37.00	20	1/4	**V3301D-37**	1	TA#1-20.00	1C11H-20-TC	5/16	7.94
1-15/32	1.469	37.31	20	1/4	**V3301D-0115**	1	TA#1-20.00	1C11H-20-TC	5/16	7.94

#Denotes ISO material/geometry (P= steel, K= cast iron, N= nonferrous).

IC Inserts

Coating	Size inch	Size metric	Grade	Geometry	Part No.	Insert Screw	Insert Driver	Admissible Tightening Torque*
AM300®	5/16	7.94	C5 (P35)	Standard	**OP-05T308-PW**	IS-10-1	8IP-10	27.0 in-lbs (305 N-cm)
AM300®	5/16	7.94	C1 (K35)	Standard	**OP-05T308-1PW**	IS-10-1	8IP-10	27.0 in-lbs (305 N-cm)
AM300®	5/16	7.94	C2 (K25)	Standard	**OP-05T308-2PW**	IS-10-1	8IP-10	27.0 in-lbs (305 N-cm)
AM300®	5/16	7.94	C5 (P35)	High Rake	**OP-05T308-PWHR**	IS-10-1	8IP-10	27.0 in-lbs (305 N-cm)

*Tightening torques are calculated with a friction coefficient of μ = 0.14 and develop 90% of ultimate yield strength.

Pilot Accessories

Pilot Style	Series	Insert Screws	Insert Driver	Admissible Tightening Torque*
T-A	0	72567-IP8-1	8IP-8	15.5 in-lbs (175 N-cm)
T-A	1	7375-IP9-1	8IP-9	27.0 in-lbs (305 N-cm)

*Tightening torques are calculated with a friction coefficient of μ = 0.14 and develop 90% of ultimate yield strength.

A50: 28 - 29
Key on A50: 1

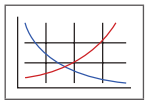

A50: 2 - 5

Section A25 & A30

Nonstocked diameters are also available. Follow the examples shown below.

Inch	38 series, T-A (1 series), 1.6790"	Part No. = **V3801D-1.6790**
Metric	38 series, T-A (1 series), 42.15 mm	Part No. = **V3801D-42.15**

IC inserts sold in multiples of 2. | Insert screws sold in multiples of 10.

APX Drill Holders

33 Series | Diameter Range: 1.299" - 1.496" (33.00 mm - 37.99 mm)

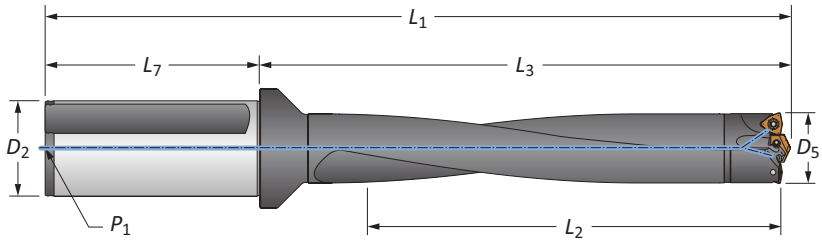

Straight Shank

	Length	D_5	Body L_2	Body L_3	Body L_1	Shank L_7	Shank D_2	Shank P_1	Part No.
i	3xD	1.299 - 1.496	4-7/16	6-19/32	9-9/32	2-11/16	1-1/2	1/4 NPT	**W3303H-150F**
i	5xD	1.299 - 1.496	7-27/64	9-37/64	12-9/32	2-11/16	1-1/2	1/4 NPT	**W3305H-150F**
i	8xD	1.299 - 1.496	11-59/64	14-5/64	16-3/4	2-11/16	1-1/2	1/4 NPT	⚠ **W3308H-150F**
i	10xD	1.299 - 1.496	14-29/32	17-1/16	19-3/4	2-11/16	1-1/2	1/4 NPT	⚠ **W3310H-150F**
m	3xD	33.00 - 37.99	112.60	167.49	237.49	70.00	40.00	1/4 BSPT	**W3303H-40FM**
m	5xD	33.00 - 37.99	188.60	243.41	313.41	70.00	40.00	1/4 BSPT	**W3305H-40FM**
m	8xD	33.00 - 37.99	302.60	357.40	427.40	70.00	40.00	1/4 BSPT	⚠ **W3308H-40FM**
m	10xD	33.00 - 37.99	378.61	433.40	503.40	70.00	40.00	1/4 BSPT	⚠ **W3310H-40FM**

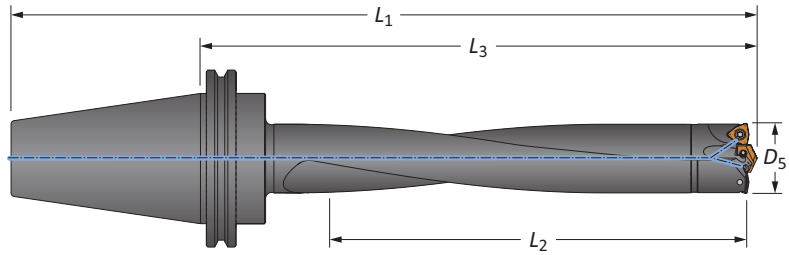

CAT Integral Shank

	Length	D_5 inch	D_5 mm	Body L_2	Body L_3	Body L_1	Shank	Part No.
i	3xD	1.299 - 1.496	33.00 - 37.99	4-7/16	7-3/8	10-3/16	CV40	**W3303H-CV40**
i	5xD	1.299 - 1.496	33.00 - 37.99	7-27/64	10-23/64	13-11/64	CV40	**W3305H-CV40**
i	8xD	1.299 - 1.496	33.00 - 37.99	11-59/64	14-55/64	17-21/32	CV40	⚠ **W3308H-CV40**
i	10xD	1.299 - 1.496	33.00 - 37.99	14-29/32	17-27/32	20-21/32	CV40	⚠ **W3310H-CV40**
i	3xD	1.299 - 1.496	33.00 - 37.99	4-7/16	7-3/8	11-1/2	CV50	**W3303H-CV50**
i	5xD	1.299 - 1.496	33.00 - 37.99	7-27/64	10-23/64	14-31/64	CV50	**W3305H-CV50**
i	8xD	1.299 - 1.496	33.00 - 37.99	11-59/64	14-55/64	18-31/32	CV50	⚠ **W3308H-CV50**
i	10xD	1.299 - 1.496	33.00 - 37.99	14-29/32	17-27/32	21-31/32	CV50	⚠ **W3310H-CV50**

Connection Accessories

Mounting Screw	Mounting Screw Driver	Admissible Tightening Torque*
75020-IP20-1	8IP-20	60 in-lb (678 N-cm)

*Tightening torques are calculated with a friction coefficient of μ = 0.14 and develop 90% of ultimate yield strength.

⚠ **WARNING** Refer to Speed and Feed charts for recommended adjustments to speeds and feeds. Refer to page A50: 30 for deep hole drilling guidelines in this section of the catalog. Visit **www.alliedmachine.com/DeepHoleGuidelines** for the most up-to-date information and procedures. Factory technical assistance is available for your specific applications through our Application Engineering Team.
ext: **7611** | *email:* **appeng@alliedmachine.com**

i = Imperial (in)
m = Metric (mm)
Mounting screws sold in multiples of 4.

APX Drill Heads

38 Series | Diameter Range: 1.496" - 1.732" (38.00 mm - 43.99 mm)

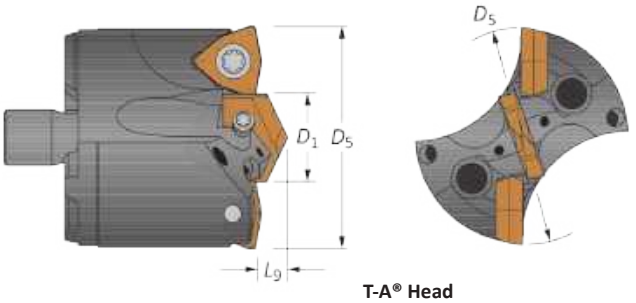

T-A® Head

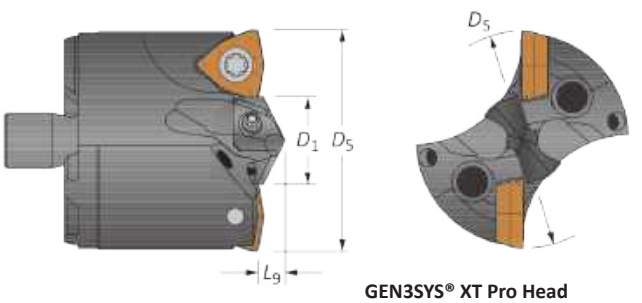

GEN3SYS® XT Pro Head

Heads

Head					T-A Head				GEN3SYS XT Pro Head			IC Insert Size	
D_5 fractional	D_5 inch	D_5 metric	D_1	L_9	Part No.	Pilot Series	T-A Pro Insert	T-A (-TC) Insert	Part No.	Pilot Series	Pilot Insert	inch	metric
-	1.496	38.00	5/8	19/64	**V3800D-38**	0	TA#0-15.88	1C10H-0020-TC	**V3815D-38**	15	XT#15-15.88	3/8	9.53
1-1/2	1.500	38.10	5/8	19/64	**V3800D-0116**	0	TA#0-15.88	1C10H-0020-TC	**V3815D-0116**	15	XT#15-15.88	3/8	9.53
1-17/32	1.531	38.90	5/8	19/64	**V3800D-0117**	0	TA#0-15.88	1C10H-0020-TC	**V3815D-0117**	15	XT#15-15.88	3/8	9.53
-	1.535	39.00	5/8	19/64	**V3800D-39**	0	TA#0-15.88	1C10H-0020-TC	**V3815D-39**	15	XT#15-15.88	3/8	9.53
1-9/16	1.563	39.69	5/8	19/64	**V3800D-0118**	0	TA#0-15.88	1C10H-0020-TC	**V3815D-0118**	15	XT#15-15.88	3/8	9.53
-	1.575	40.00	11/16	19/64	**V3800D-40**	0	TA#0-17.46	1C10H-0022-TC	**V3817D-40**	17	XT#17-17.46	3/8	9.53
1-19/32	1.594	40.48	11/16	19/64	**V3800D-0119**	0	TA#0-17.46	1C10H-0022-TC	**V3817D-0119**	17	XT#17-17.46	3/8	9.53
-	1.614	41.00	11/16	19/64	**V3800D-41**	0	TA#0-17.46	1C10H-0022-TC	**V3817D-41**	17	XT#17-17.46	3/8	9.53
1-5/8	1.625	41.28	11/16	19/64	**V3800D-0120**	0	TA#0-17.46	1C10H-0022-TC	**V3817D-0120**	17	XT#17-17.46	3/8	9.53
-	1.654	42.00	3/4	19/64	**V3801D-42**	1	TA#1-19.05	1C11H-0024-TC	**V3818D-42**	18	XT#18-19.05	3/8	9.53
1-21/32	1.656	42.07	3/4	19/64	**V3801D-0121**	1	TA#1-19.05	1C11H-0024-TC	**V3818D-0121**	18	XT#18-19.05	3/8	9.53
1-11/16	1.688	42.86	3/4	19/64	**V3801D-0122**	1	TA#1-19.05	1C11H-0024-TC	**V3818D-0122**	18	XT#18-19.05	3/8	9.53
-	1.693	43.00	13/16	19/64	**V3801D-43**	1	TA#1-20.64	1C11H-0026-TC	**V3820D-43**	20	XT#20-20.64	3/8	9.53
1-23/32	1.719	43.66	13/16	19/64	**V3801D-0123**	1	TA#1-20.64	1C11H-0026-TC	**V3820D-0123**	20	XT#20-20.64	3/8	9.53

#Denotes ISO material/geometry (P= steel, K= cast iron, N= nonferrous).

IC Inserts

Coating	Size inch	Size metric	Grade	Geometry	Part No.	Insert Screw	Insert Driver	Admissible Tightening Torque*
AM300®	3/8	9.53	C5 (P35)	Standard	**OP-060408-PW**	73595-IP15-1	8IP-15	41.0 in-lbs (465 N-cm)
AM300®	3/8	9.53	C1 (K35)	Standard	**OP-060408-1PW**	73595-IP15-1	8IP-15	41.0 in-lbs (465 N-cm)
AM300®	3/8	9.53	C2 (K25)	Standard	**OP-060408-2PW**	73595-IP15-1	8IP-15	41.0 in-lbs (465 N-cm)
AM300®	3/8	9.53	C5 (P35)	High Rake	**OP-060408-PWHR**	73595-IP15-1	8IP-15	41.0 in-lbs (465 N-cm)

*Tightening torques are calculated with a friction coefficient of μ = 0.14 and develop 90% of ultimate yield strength.

Pilot Accessories

Pilot Style	Series	Insert Screws	Insert Driver	Admissible Tightening Torque*
T-A	0	72567-IP8-1	8IP-8	15.5 in-lbs (175 N-cm)
T-A	1	7375-IP9-1	8IP-9	27.0 in-lbs (305 N-cm)
GEN3SYS	15	7247-IP7-1	8IP-7	7.4 in-lbs (84 N-cm)
GEN3SYS	17	72567-IP8-1	8IP-8	15.5 in-lbs (175 N-cm)
GEN3SYS	18	7375-IP9-1	8IP-9	27.0 in-lbs (305 N-cm)
GEN3SYS	20	7375-IP9-1	8IP-9	27.0 in-lbs (305 N-cm)

*Tightening torques are calculated with a friction coefficient of μ = 0.14 and develop 90% of ultimate yield strength.

A50: 28 - 29
Key on A50: 1

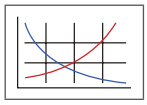

A50: 2 - 5

Section A20

Section A25 & A30

Nonstocked diameters are also available. Follow the examples shown below.

Inch	38 series, T-A (1 series), 1.6790"	Part No. = **V3801D-1.6790**
Metric	38 series, T-A (1 series), 42.15 mm	Part No. = **V3801D-42.15**

IC inserts sold in multiples of 2. | Insert screws sold in multiples of 10.

APX Drill Holders

38 Series | Diameter Range: 1.496" - 1.732" (38.00 mm - 43.99 mm)

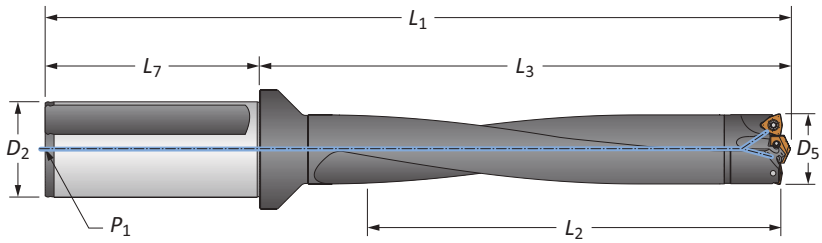

Straight Shank

	Length	D_5	Body L_2	Body L_3	Body L_1	Shank L_7	Shank D_2	Shank P_1	Part No.
i	3xD	1.496 - 1.732	5-1/8	7-47/64	10-25/64	2-11/16	1-1/2	1/4 NPT	W3803H-150F
	5xD	1.496 - 1.732	8-5/8	11-13/64	13-55/64	2-11/16	1-1/2	1/4 NPT	W3805H-150F
	8xD	1.496 - 1.732	13-7/8	16-25/64	19-3/64	2-11/16	1-1/2	1/4 NPT	⚠ W3808H-150F
	10xD	1.496 - 1.732	17-1/4	19-27/32	22-33/64	2-11/16	1-1/2	1/4 NPT	⚠ W3810H-150F
	3xD	1.496 - 1.732	5-1/8	7-47/64	12-15/64	4-1/2	2	1/4 NPT	W3803H-200F
	5xD	1.496 - 1.732	8-5/8	11-13/64	15-45/64	4-1/2	2	1/4 NPT	W3805H-200F
	8xD	1.496 - 1.732	13-7/8	16-25/64	20-57/64	4-1/2	2	1/4 NPT	⚠ W3808H-200F
	10xD	1.496 - 1.732	17-1/4	19-27/32	24-59/64	4-1/2	2	1/4 NPT	⚠ W3810H-200F
m	3xD	38.00 - 43.99	130.51	196.49	265.71	70.00	40.00	1/4 BSPT	W3803H-40FM
	5xD	38.00 - 43.99	219.99	284.51	353.70	70.00	40.00	1/4 BSPT	W3805H-40FM
	8xD	38.00 - 43.99	351.99	416.51	485.70	70.00	40.00	1/4 BSPT	⚠ W3808H-40FM
	10xD	38.00 - 43.99	439.90	503.91	573.71	70.00	40.00	1/4 BSPT	⚠ W3810H-40FM
	3xD	38.00 - 43.99	130.51	196.49	276.50	80.00	50.00	1/4 BSPT	W3803H-50FM
	5xD	38.00 - 43.99	219.99	284.51	364.49	80.00	50.00	1/4 BSPT	W3805H-50FM
	8xD	38.00 - 43.99	351.99	416.51	496.99	80.00	50.00	1/4 BSPT	⚠ W3808H-50FM
	10xD	38.00 - 43.99	439.90	503.90	583.91	80.00	50.00	1/4 BSPT	⚠ W3810H-50FM

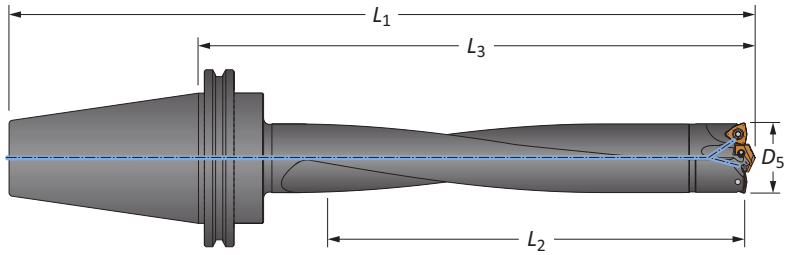

CAT Integral Shank

	Length	D_5 inch	D_5 mm	Body L_2	Body L_3	Body L_1	Shank	Part No.
i	3xD	1.496 - 1.732	38.00 - 43.99	5-1/8	8-5/16	11	CV40	W3803H-CV40
	5xD	1.496 - 1.732	38.00 - 43.99	8-5/8	11-49/64	14-29/64	CV40	W3805H-CV40
	8xD	1.496 - 1.732	38.00 - 43.99	13-7/8	16-31/32	19-21/32	CV40	⚠ W3808H-CV40
	10xD	1.496 - 1.732	38.00 - 43.99	17-1/4	20-7/16	23-1/8	CV40	⚠ W3810H-CV40
	3xD	1.496 - 1.732	38.00 - 43.99	5-1/8	8-5/16	12-5/16	CV50	W3803H-CV50
	5xD	1.496 - 1.732	38.00 - 43.99	8-5/8	11-49/64	15-49/64	CV50	W3805H-CV50
	8xD	1.496 - 1.732	38.00 - 43.99	13-7/8	16-31/32	20-31/32	CV50	⚠ W3808H-CV50
	10xD	1.496 - 1.732	38.00 - 43.99	17-1/4	20-7/16	24-7/16	CV50	⚠ W3810H-CV50

Connection Accessories

Mounting Screw	Mounting Screw Driver	Admissible Tightening Torque*
75020-IP20-1	8IP-20	60 in-lb (678 N-cm)

*Tightening torques are calculated with a friction coefficient of μ = 0.14 and develop 90% of ultimate yield strength.

⚠ WARNING Refer to Speed and Feed charts for recommended adjustments to speeds and feeds. Refer to page A50: 30 for deep hole drilling guidelines in this section of the catalog. Visit **www.alliedmachine.com/DeepHoleGuidelines** for the most up-to-date information and procedures. Factory technical assistance is available for your specific applications through our Application Engineering Team.
ext: **7611** | *email:* **appeng@alliedmachine.com**

i = Imperial (in)
m = Metric (mm)
Mounting screws sold in multiples of 4.

APX Drill Heads

44 Series | Diameter Range: 1.732" - 2.008" (44.00 mm - 50.99 mm)

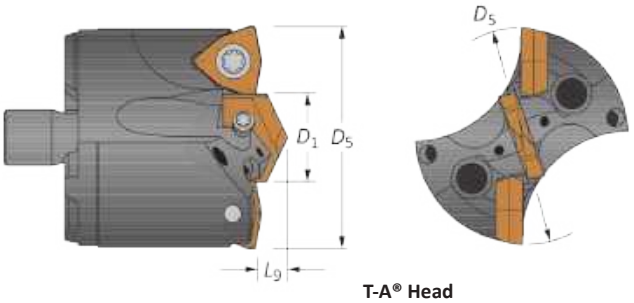

T-A® Head

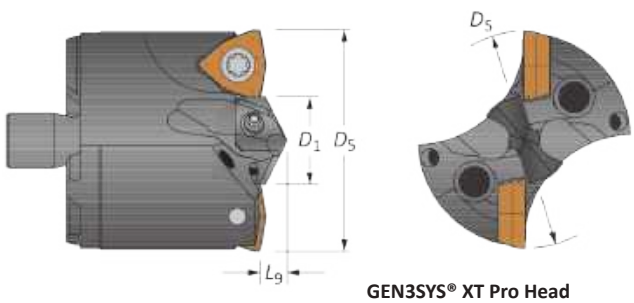

GEN3SYS® XT Pro Head

Heads

Head					T-A Head				GEN3SYS XT Pro Head			IC Insert Size	
D_5 fractional	D_5 inch	D_5 metric	D_1	L_9	Part No.	Pilot Series	T-A Pro Insert	T-A (-TC) Insert	Part No.	Pilot Series	Pilot Insert	inch	metric
-	1.732	44.00	7/8	21/64	**V4401D-44**	1	TA#1-22.23	1C11H-0028-TC	**V4422D-44**	22	XT#22-22.23	3/8	9.53
1-3/4	1.750	44.45	7/8	21/64	**V4401D-0124**	1	TA#1-22.23	1C11H-0028-TC	**V4422D-0124**	22	XT#22-22.23	3/8	9.53
-	1.772	45.00	7/8	21/64	**V4401D-45**	1	TA#1-22.23	1C11H-0028-TC	**V4422D-45**	22	XT#22-22.23	3/8	9.53
1-25/32	1.781	45.25	7/8	21/64	**V4401D-0125**	1	TA#1-22.23	1C11H-0028-TC	**V4422D-0125**	22	XT#22-22.23	3/8	9.53
-	1.811	46.00	15/16	21/64	**V4401D-46**	1	TA#1-23.81	1C11H-0030-TC	**V4422D-46**	22	XT#22-23.81	3/8	9.53
1-13/16	1.813	46.04	15/16	21/64	**V4401D-0126**	1	TA#1-23.81	1C11H-0030-TC	**V4422D-0126**	22	XT#22-23.81	3/8	9.53
1-27/32	1.844	46.83	15/16	21/64	**V4401D-0127**	1	TA#1-23.81	1C11H-0030-TC	**V4422D-0127**	22	XT#22-23.81	3/8	9.53
-	1.850	47.00	15/16	21/64	**V4401D-47**	1	TA#1-23.81	1C11H-0030-TC	**V4422D-47**	22	XT#22-23.81	3/8	9.53
1-7/8	1.875	47.63	15/16	21/64	**V4401D-0128**	1	TA#1-23.81	1C11H-0030-TC	**V4422D-0128**	22	XT#22-23.81	3/8	9.53
-	1.890	48.00	45/64	21/64	**V4401D-48**	1**	TA#1-17.86	1C11H-.703-TC	**V4417D-48**	17	XT#17-17.86	1/2	12.70
1-29/32	1.906	48.42	45/64	21/64	**V4401D-0129**	1**	TA#1-17.86	1C11H-.703-TC	**V4417D-0129**	17	XT#17-17.86	1/2	12.70
-	1.929	49.00	45/64	21/64	**V4401D-49**	1**	TA#1-17.86	1C11H-.703-TC	**V4417D-49**	17	XT#17-17.86	1/2	12.70
1-15/16	1.938	49.21	45/64	21/64	**V4401D-0130**	1**	TA#1-17.86	1C11H-.703-TC	**V4417D-0130**	17	XT#17-17.86	1/2	12.70
-	1.969	50.00	47/64	21/64	**V4401D-50**	1**	TA#1-18.65	1C11H-.734-TC	**V4418D-50**	18	XT#18-18.65	1/2	12.70
1-31/32	1.969	50.01	47/64	21/64	**V4401D-0131**	1**	TA#1-18.65	1C11H-.734-TC	**V4418D-0131**	18	XT#18-18.65	1/2	12.70
2	2.000	50.80	47/64	21/64	**V4401D-0200**	1**	TA#1-18.65	1C11H-.734-TC	**V4418D-0200**	18	XT#18-18.65	1/2	12.70

#Denotes ISO material/geometry (P= steel, K= cast iron, N= nonferrous).
**Note: coordinating screw in accessory table below.

IC Inserts

Coating	Size inch	Size metric	Grade	Geometry	Part No.	Insert Screw	Insert Driver	Admissible Tightening Torque*
AM300®	3/8	9.53	C5 (P35)	Standard	**OP-060408-PW**	73595-IP15-1	8IP-15	41.0 in-lbs (465 N-cm)
AM300®	3/8	9.53	C1 (K35)	Standard	**OP-060408-1PW**	73595-IP15-1	8IP-15	41.0 in-lbs (465 N-cm)
AM300®	3/8	9.53	C2 (K25)	Standard	**OP-060408-2PW**	73595-IP15-1	8IP-15	41.0 in-lbs (465 N-cm)
AM300®	3/8	9.53	C5 (P35)	High Rake	**OP-060408-PWHR**	73595-IP15-1	8IP-15	41.0 in-lbs (465 N-cm)
AM300®	1/2	12.70	C5 (P35)	Standard	**OP-080508-PW**	74012-IP15-1	8IP-15	61.0 in-lbs (690 N-cm)
AM300®	1/2	12.70	C1 (K35)	Standard	**OP-080508-1PW**	74012-IP15-1	8IP-15	61.0 in-lbs (690 N-cm)
AM300®	1/2	12.70	C2 (K25)	Standard	**OP-080508-2PW**	74012-IP15-1	8IP-15	61.0 in-lbs (690 N-cm)
AM300®	1/2	12.70	C5 (P35)	High Rake	**OP-080508-PWHR**	74012-IP15-1	8IP-15	61.0 in-lbs (690 N-cm)

*Tightening torques are calculated with a friction coefficient of μ = 0.14 and develop 90% of ultimate yield strength.

Pilot Accessories

Pilot Style	Series	Insert Screws	Insert Driver	Admissible Tightening Torque*
T-A	1	739-IP9-1	8IP-9	27.0 in-lbs (305 N-cm)
T-A	1**	7375-IP9-1	8IP-9	27.0 in-lbs (305 N-cm)
GEN3SYS	17	72567-IP8-1	8IP-8	15.5 in-lbs (175 N-cm)
GEN3SYS	18	7375-IP9-1	8IP-9	27.0 in-lbs (305 N-cm)
GEN3SYS	22	739-IP9-1	8IP-9	27.0 in-lbs (305 N-cm)

*Tightening torques are calculated with a friction coefficient of μ = 0.14 and develop 90% of ultimate yield strength.

A50: 28 - 29

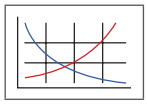

Key on A50: 1

A50: 2 - 5

Section A20

Section A25 & A30

Nonstocked diameters are also available. Follow the examples shown below.

Inch	38 series, T-A (1 series), 1.6790"	Part No. = **V3801D-1.6790**
Metric	38 series, T-A (1 series), 42.15 mm	Part No. = **V3801D-42.15**

IC inserts sold in multiples of 2. | Insert screws sold in multiples of 10.

APX Drill Holders

44 Series | Diameter Range: 1.732" - 2.008" (44.00 mm - 50.99 mm)

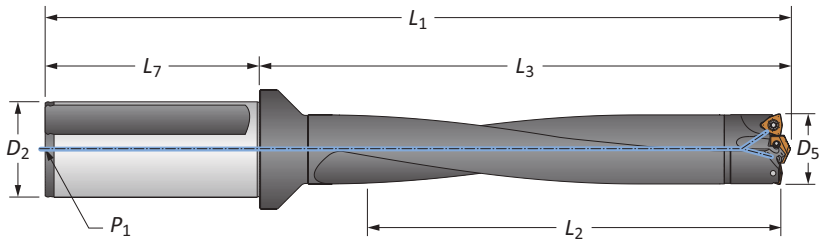

Straight Shank

	Length	D_5	Body L_2	Body L_3	Body L_1	Shank L_7	Shank D_2	Shank P_1	Part No.
i	3xD	1.732 - 2.008	6	8-17/32	11-15/64	2-11/16	1-1/2	1/4 NPT	W4403H-150F
	5xD	1.732 - 2.008	10	12-35/64	15-1/4	2-11/16	1-1/2	1/4 NPT	W4405H-150F
	8xD	1.732 - 2.008	16	18-37/64	21-17/64	2-11/16	1-1/2	1/4 NPT	⚠ W4408H-150F
	10xD	1.732 - 2.008	20-1/8	22-19/32	25-9/32	2-11/16	1-1/2	1/4 NPT	⚠ W4410H-150F
	3xD	1.732 - 2.008	6	8-33/64	13-1/32	4-1/2	2	1/4 NPT	W4403H-200F
	5xD	1.732 - 2.008	10	12-35/64	17-3/64	4-1/2	2	1/4 NPT	W4405H-200F
	8xD	1.732 - 2.008	16	18-37/64	23-5/64	4-1/2	2	1/4 NPT	⚠ W4408H-200F
	10xD	1.732 - 2.008	20-1/8	22-19/32	27-3/32	4-1/2	2	1/4 NPT	⚠ W4410H-200F
m	3xD	44.00 - 50.99	152.00	216.79	286.89	70.00	40.00	1/4 BSPT	W4403H-40FM
	5xD	44.00 - 50.99	255.00	318.80	388.90	70.00	40.00	1/4 BSPT	W4405H-40FM
	8xD	44.00 - 50.99	408.00	471.81	541.81	70.00	40.00	1/4 BSPT	⚠ W4408H-40FM
	10xD	44.00 - 50.99	510.01	573.81	643.79	70.00	40.00	1/4 BSPT	⚠ W4410H-40FM
	3xD	44.00 - 50.99	152.00	216.79	296.90	80.00	50.00	1/4 BSPT	W4403H-50FM
	5xD	44.00 - 50.99	255.00	318.80	398.80	80.00	50.00	1/4 BSPT	W4405H-50FM
	8xD	44.00 - 50.99	409.00	471.70	551.69	80.00	50.00	1/4 BSPT	⚠ W4408H-50FM
	10xD	44.00 - 50.99	510.01	573.81	653.80	80.00	50.00	1/4 BSPT	⚠ W4410H-50FM

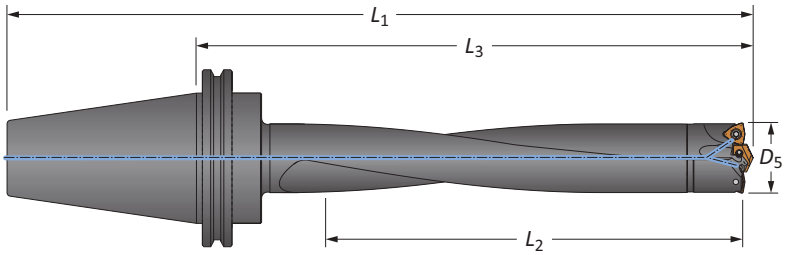

CAT Integral Shank

	Length	D_5 inch	D_5 mm	Body L_2	Body L_3	Body L_1	Shank	Part No.
i	3xD	1.732 - 2.008	44.00 - 50.99	6	9-1/4	11-15/16	CV40	W4403H-CV40
	5xD	1.732 - 2.008	44.00 - 50.99	10	13-17/64	15-61/64	CV40	W4405H-CV40
	8xD	1.732 - 2.008	44.00 - 50.99	16	19-19/64	21-63/64	CV40	⚠ W4408H-CV40
	10xD	1.732 - 2.008	44.00 - 50.99	20-1/8	23-5/16	26	CV40	⚠ W4410H-CV40
	3xD	1.732 - 2.008	44.00 - 50.99	6	9-1/4	13-1/4	CV50	W4403H-CV50
	5xD	1.732 - 2.008	44.00 - 50.99	10	13-17/64	17-17/64	CV50	W4405H-CV50
	8xD	1.732 - 2.008	44.00 - 50.99	16	19-19/64	23-19/64	CV50	⚠ W4408H-CV50
	10xD	1.732 - 2.008	44.00 - 50.99	20	23-5/16	27-5/16	CV50	⚠ W4410H-CV50

Connection Accessories

Mounting Screw	Mounting Screw Driver	Admissible Tightening Torque*
75020-IP20-1	8IP-20	60 in-lb (678 N-cm)

*Tightening torques are calculated with a friction coefficient of μ = 0.14 and develop 90% of ultimate yield strength.

⚠ WARNING Refer to Speed and Feed charts for recommended adjustments to speeds and feeds. Refer to page A50: 30 for deep hole drilling guidelines in this section of the catalog. Visit **www.alliedmachine.com/DeepHoleGuidelines** for the most up-to-date information and procedures. Factory technical assistance is available for your specific applications through our Application Engineering Team.
ext: **7611** | *email:* **appeng@alliedmachine.com**

i = Imperial (in)
m = Metric (mm)
Mounting screws sold in multiples of 4.

APX Drill Heads

51 Series | Diameter Range: 2.008" - 2.244" (51.00 mm - 56.99 mm)

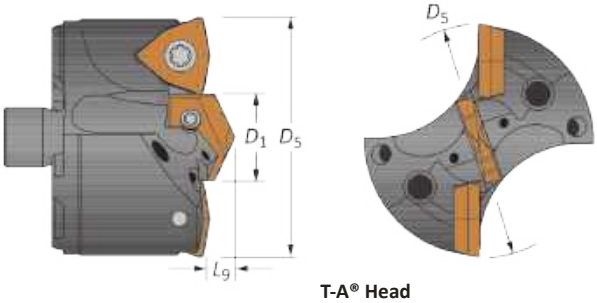

T-A® Head

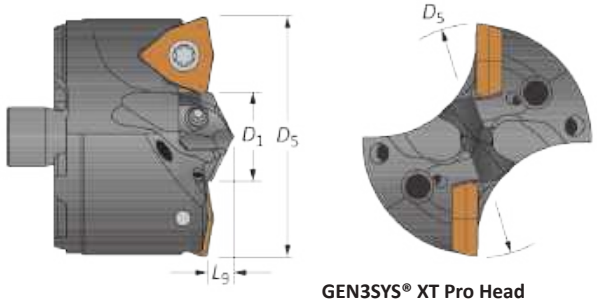

GEN3SYS® XT Pro Head

Heads

Head					T-A Head				GEN3SYS XT Pro Head			IC Insert Size	
D_5 fractional	D_5 inch	D_5 metric	D_1	L_9	Part No.	Pilot Series	T-A Pro Insert	T-A (-TC) Insert	Part No.	Pilot Series	Pilot Insert	inch	metric
-	2.008	51.00	25/32	11/32	**V5101D-51**	1**	TA#1-19.84	1C11H-0025-TC	**V5118D-51**	18	XT#18-19.84	1/2	12.70
2-1/32	2.031	51.59	25/32	11/32	**V5101D-0201**	1**	TA#1-19.84	1C11H-0025-TC	**V5118D-0201**	18	XT#18-19.84	1/2	12.70
-	2.047	52.00	25/32	11/32	**V5101D-52**	1**	TA#1-19.84	1C11H-0025-TC	**V5118D-52**	18	XT#18-19.84	1/2	12.70
2-1/16	2.063	52.39	25/32	11/32	**V5101D-0202**	1**	TA#1-19.84	1C11H-0025-TC	**V5118D-0202**	18	XT#18-19.84	1/2	12.70
-	2.087	53.00	27/32	11/32	**V5101D-53**	1**	TA#1-21.43	1C11H-0027-TC	**V5120D-53**	20	XT#20-21.43	1/2	12.70
2-3/32	2.094	53.18	27/32	11/32	**V5101D-0203**	1**	TA#1-21.43	1C11H-0027-TC	**V5120D-0203**	20	XT#20-21.43	1/2	12.70
2-1/8	2.125	53.98	27/32	11/32	**V5101D-0204**	1**	TA#1-21.43	1C11H-0027-TC	**V5120D-0204**	20	XT#20-21.43	1/2	12.70
-	2.126	54.00	15/16	11/32	**V5101D-54**	1	TA#1-23.81	1C11H-0030-TC	**V5122D-54**	22	XT#22-23.81	1/2	12.70
2-5/32	2.156	54.77	15/16	11/32	**V5101D-0205**	1	TA#1-23.81	1C11H-0030-TC	**V5122D-0205**	22	XT#22-23.81	1/2	12.70
-	2.165	55.00	15/16	11/32	**V5101D-55**	1	TA#1-23.81	1C11H-0030-TC	**V5122D-55**	22	XT#22-23.81	1/2	12.70
2-3/16	2.188	55.56	15/16	11/32	**V5101D-0206**	1	TA#1-23.81	1C11H-0030-TC	**V5122D-0206**	22	XT#22-23.81	1/2	12.70
-	2.205	56.00	15/16	11/32	**V5101D-56**	1	TA#1-23.81	1C11H-0030-TC	**V5122D-56**	22	XT#22-23.81	1/2	12.70
2-7/32	2.219	56.36	13/16	11/32	**V5101D-0207**	1**	TA#1-20.64	1C11H-0026-TC	**V5120D-0207**	20	XT#20-20.64	9/16	14.29

#Denotes ISO material/geometry (P= steel, K= cast iron, N= nonferrous).
**Note: coordinating screw in accessory table below.

IC Inserts

Coating	Size inch	Size metric	Grade	Geometry	Part No.	Insert Screw	Insert Driver	Admissible Tightening Torque*
AM300®	1/2	12.70	C5 (P35)	Standard	**OP-080508-PW**	74012-IP15-1	8IP-15	61.0 in-lbs (690 N-cm)
AM300®	1/2	12.70	C1 (K35)	Standard	**OP-080508-1PW**	74012-IP15-1	8IP-15	61.0 in-lbs (690 N-cm)
AM300®	1/2	12.70	C2 (K25)	Standard	**OP-080508-2PW**	74012-IP15-1	8IP-15	61.0 in-lbs (690 N-cm)
AM300®	1/2	12.70	C5 (P35)	High Rake	**OP-080508-PWHR**	74012-IP15-1	8IP-15	61.0 in-lbs (690 N-cm)
AM300®	9/16	14.29	C5 (P35)	Standard	**OP-090608-PW**	75014-IP20-1	8IP-20	121.0 in-lbs (1370 N-cm)
AM300®	9/16	14.29	C1 (K35)	Standard	**OP-090608-1PW**	75014-IP20-1	8IP-20	121.0 in-lbs (1370 N-cm)
AM300®	9/16	14.29	C2 (K25)	Standard	**OP-090608-2PW**	75014-IP20-1	8IP-20	121.0 in-lbs (1370 N-cm)
AM300®	9/16	14.29	C5 (P35)	High Rake	**OP-090608-PWHR**	75014-IP20-1	8IP-20	121.0 in-lbs (1370 N-cm)

*Tightening torques are calculated with a friction coefficient of μ = 0.14 and develop 90% of ultimate yield strength.

Pilot Accessories

Pilot Style	Series	Insert Screws	Insert Driver	Admissible Tightening Torque*
T-A	1	739-IP9-1	8IP-9	27.0 in-lbs (305 N-cm)
T-A	1**	7375-IP9-1	8IP-9	27.0 in-lbs (305 N-cm)
GEN3SYS	18	7375-IP9-1	8IP-9	27.0 in-lbs (305 N-cm)
GEN3SYS	20	7375-IP9-1	8IP-9	27.0 in-lbs (305 N-cm)
GEN3SYS	22	739-IP9-1	8IP-9	27.0 in-lbs (305 N-cm)

*Tightening torques are calculated with a friction coefficient of μ = 0.14 and develop 90% of ultimate yield strength.

A50: 28 - 29

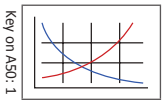

A50: 2 - 5

Section A20

Section A25 & A30

Nonstocked diameters are also available. Follow the examples shown below.

Inch	38 series, T-A (1 series), 1.6790"	Part No. = **V3801D-1.6790**
Metric	38 series, T-A (1 series), 42.15 mm	Part No. = **V3801D-42.15**

IC inserts sold in multiples of 2. | Insert screws sold in multiples of 10.

APX Drill Holders

51 Series | Diameter Range: 2.008" - 2.244" (51.00 mm - 56.99 mm)

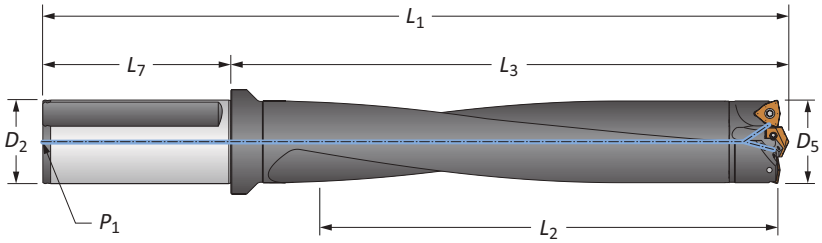

Straight Shank

	Length	D_5	Body L_2	Body L_3	Body L_1	Shank L_7	Shank D_2	Shank P_1	Part No.
i	3xD	2.008 - 2.244	6-3/8	8-7/8	13-3/8	4-1/2	2	1/4 NPT	**W5103H-200F**
i	5xD	2.008 - 2.244	11-1/8	13-3/8	17-7/8	4-1/2	2	1/4 NPT	**W5105H-200F**
i	8xD	2.008 - 2.244	17-7/8	20-3/32	24-19/32	4-1/2	2	1/4 NPT	⚠ **W5108H-200F**
i	10xD	2.008 - 2.244	22-3/8	24-19/32	29-3/32	4-1/2	2	1/4 NPT	⚠ **W5110H-200F**
m	3xD	51.00 - 56.99	161.80	225.50	305.51	80.00	50.00	1/4 BSPT	**W5103H-50FM**
m	5xD	51.00 - 56.99	284.99	339.60	419.61	80.00	50.00	1/4 BSPT	**W5105H-50FM**
m	8xD	51.00 - 56.99	455.90	510.49	590.50	80.00	50.00	1/4 BSPT	⚠ **W5108H-50FM**
m	10xD	51.00 - 56.99	570.00	624.61	704.60	80.00	50.00	1/4 BSPT	⚠ **W5110H-50FM**

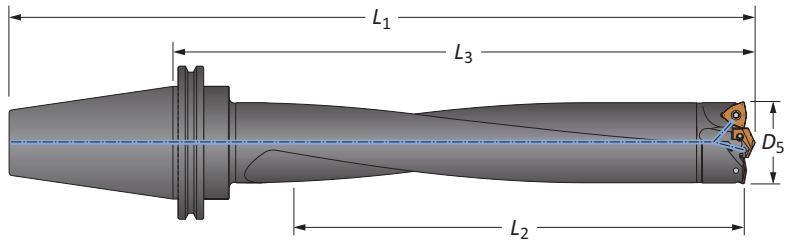

CV50 Shank

	Length	D_5 inch	D_5 mm	Body L_2	Body L_3	Body L_1	Shank	Part No.
i	3xD	2.008 - 2.244	51.00 - 56.99	6-3/8	9-47/64	13-47/64	CV50	**W5103H-CV50**
i	5xD	2.008 - 2.244	51.00 - 56.99	11-1/4	14-7/32	18-7/32	CV50	**W5105H-CV50**
i	8xD	2.008 - 2.244	51.00 - 56.99	17-7/8	20-61/64	24-61/64	CV50	⚠ **W5108H-CV50**
i	10xD	2.008 - 2.244	51.00 - 56.99	22-3/8	25-7/16	29-7/16	CV50	⚠ **W5110H-CV50**

Connection Accessories

Mounting Screw	Mounting Screw Driver	Admissible Tightening Torque*
75020-IP20-1	8IP-20	60 in-lb (678 N-cm)

*Tightening torques are calculated with a friction coefficient of μ = 0.14 and develop 90% of ultimate yield strength.

⚠ **WARNING** Refer to Speed and Feed charts for recommended adjustments to speeds and feeds. Refer to page A50: 30 for deep hole drilling guidelines in this section of the catalog. Visit **www.alliedmachine.com/DeepHoleGuidelines** for the most up-to-date information and procedures. Factory technical assistance is available for your specific applications through our Application Engineering Team.
ext: **7611** | *email:* **appeng@alliedmachine.com**

i = Imperial (in)
m = Metric (mm)
Mounting screws sold in multiples of 4.

APX Drill Heads

57 Series | Diameter Range: 2.244" - 2.480" (57.00 mm - 62.99 mm)

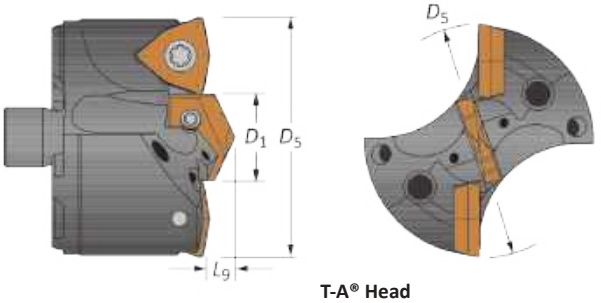

T-A® Head

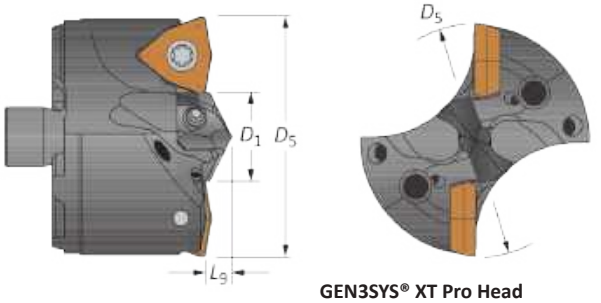

GEN3SYS® XT Pro Head

Heads

Head					T-A Head				GEN3SYS XT Pro Head			IC Insert Size	
D_5 fractional	D_5 inch	D_5 metric	D_1	L_9	Part No.	Pilot Series	T-A Pro Insert	T-A (-TC) Insert	Part No.	Pilot Series	Pilot Insert	inch	metric
-	2.244	57.00	29/32	25/64	**V5701D-57**	1	TA#1-23.02	1C11H-0029-TC	**V5722D-57**	22	XT#22-23.02	9/16	14.29
2-1/4	2.250	57.15	29/32	25/64	**V5701D-0208**	1	TA#1-23.02	1C11H-0029-TC	**V5722D-0208**	22	XT#22-23.02	9/16	14.29
2-9/32	2.281	57.94	29/32	25/64	**V5701D-0209**	1	TA#1-23.02	1C11H-0029-TC	**V5722D-0209**	22	XT#22-23.02	9/16	14.29
-	2.284	58.00	29/32	25/64	**V5701D-58**	1	TA#1-23.02	1C11H-0029-TC	**V5722D-58**	22	XT#22-23.02	9/16	14.29
2-5/16	2.313	58.74	29/32	25/64	**V5701D-0210**	1	TA#1-23.02	1C11H-0029-TC	**V5722D-0210**	22	XT#22-23.02	9/16	14.29
-	2.323	59.00	15/16	25/64	**V5701D-59**	1	TA#1-23.81	1C11H-0030-TC	**V5722D-59**	22	XT#22-23.81	9/16	14.29
2-11/32	2.344	59.53	15/16	25/64	**V5701D-0211**	1	TA#1-23.81	1C11H-0030-TC	**V5722D-0211**	22	XT#22-23.81	9/16	14.29
-	2.362	60.00	15/16	25/64	**V5701D-60**	1	TA#1-23.81	1C11H-0030-TC	**V5722D-60**	22	XT#22-23.81	9/16	14.29
2-3/8	2.375	60.33	15/16	25/64	**V5701D-0212**	1	TA#1-23.81	1C11H-0030-TC	**V5722D-0212**	22	XT#22-23.81	9/16	14.29
-	2.402	61.00	1	25/64	**V5702D-61**	2	TA#2-25.40	1C12H-0100-TC	**V5724D-61**	24	XT#24-25.40	9/16	14.29
2-13/32	2.406	61.12	1	25/64	**V5702D-0213**	2	TA#2-25.40	1C12H-0100-TC	**V5724D-0213**	24	XT#24-25.40	9/16	14.29
2-7/16	2.438	61.91	1	25/64	**V5702D-0214**	2	TA#2-25.40	1C12H-0100-TC	**V5724D-0214**	24	XT#24-25.40	9/16	14.29
-	2.441	62.00	1-1/16	25/64	**V5702D-62**	2	TA#2-26.99	1C12H-0102-TC	**V5726D-62**	26	XT#26-26.99	9/16	14.29
2-15/32	2.469	62.71	1-1/16	25/64	**V5702D-0215**	2	TA#2-26.99	1C12H-0102-TC	**V5726D-0215**	26	XT#26-26.99	9/16	14.29

#Denotes ISO material/geometry (P= steel, K= cast iron, N= nonferrous).

IC Inserts

Coating	Size inch	Size metric	Grade	Geometry	Part No.	Insert Screw	Insert Driver	Admissible Tightening Torque*
AM300®	9/16	14.29	C5 (P35)	Standard	**OP-090608-PW**	75014-IP20-1	8IP-20	121.0 in-lbs (1370 N-cm)
AM300®	9/16	14.29	C1 (K35)	Standard	**OP-090608-1PW**	75014-IP20-1	8IP-20	121.0 in-lbs (1370 N-cm)
AM300®	9/16	14.29	C2 (K25)	Standard	**OP-090608-2PW**	75014-IP20-1	8IP-20	121.0 in-lbs (1370 N-cm)
AM300®	9/16	14.29	C5 (P35)	High Rake	**OP-090608-PWHR**	75014-IP20-1	8IP-20	121.0 in-lbs (1370 N-cm)

*Tightening torques are calculated with a friction coefficient of μ = 0.14 and develop 90% of ultimate yield strength.

Pilot Accessories

Pilot Style	Series	Insert Screws	Insert Driver	Admissible Tightening Torque*
T-A	1	739-IP9-1	8IP-9	27.0 in-lbs (305 N-cm)
T-A	2	7495-IP15-1	8IP-15	61.0 in-lbs (690 N-cm)
GEN3SYS	22	739-IP9-1	8IP-9	27.0 in-lbs (305 N-cm)
GEN3SYS	24	739-IP9-1	8IP-9	27.0 in-lbs (305 N-cm)
GEN3SYS	26	7495-IP15-1	8IP-15	61.0 in-lbs (690 N-cm)

*Tightening torques are calculated with a friction coefficient of μ = 0.14 and develop 90% of ultimate yield strength.

A50: 28 - 29

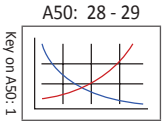

A50: 2 - 5

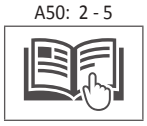

Section A20

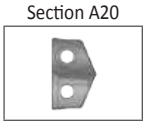

Section A25 & A30

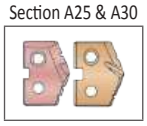

Nonstocked diameters are also available. Follow the examples shown below.

Inch	38 series, T-A (1 series), 1.6790"	Part No. = **V3801D-1.6790**
Metric	38 series, T-A (1 series), 42.15 mm	Part No. = **V3801D-42.15**

IC inserts sold in multiples of 2. | Insert screws sold in multiples of 10.

APX Drill Holders

57 Series | Diameter Range: 2.244" - 2.480" (57.00 mm - 62.99 mm)

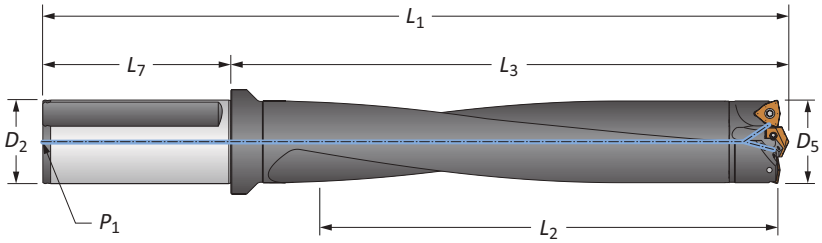

Straight Shank

	Length	D_5	Body L_2	Body L_3	Body L_1	Shank L_7	Shank D_2	Shank P_1	Part No.
i	3xD	2.244 - 2.480	7-1/8	9-35/64	14-1/16	4-1/2	2	1/4 NPT	**W5703H-200F**
i	5xD	2.244 - 2.480	12-3/8	14-33/64	19-1/64	4-1/2	2	1/4 NPT	**W5705H-200F**
i	8xD	2.244 - 2.480	19-3/4	21-31/32	26-15/32	4-1/2	2	1/4 NPT	⚠ **W5708H-200F**
i	10xD	2.244 - 2.480	24-3/4	26-59/64	31-27/64	4-1/2	2	1/4 NPT	⚠ **W5710H-200F**
m	3xD	57.00 - 62.99	179.91	242.70	322.71	80.00	50.00	1/4 BSPT	**W5703H-50FM**
m	5xD	57.00 - 62.99	315.01	368.60	448.59	80.00	50.00	1/4 BSPT	**W5705H-50FM**
m	8xD	57.00 - 62.99	503.90	557.81	637.81	80.00	50.00	1/4 BSPT	⚠ **W5708H-50FM**
m	10xD	57.00 - 62.99	626.90	683.79	763.80	80.00	50.00	1/4 BSPT	⚠ **W5710H-50FM**

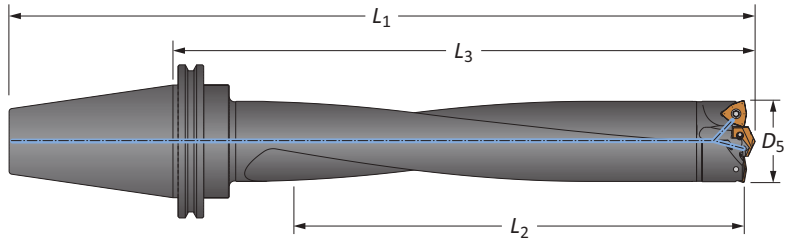

CV50 Shank

	Length	D_5 inch	D_5 mm	Body L_2	Body L_3	Body L_1	Shank	Part No.
i	3xD	2.244 - 2.480	57.00 - 62.99	7-1/8	10-17/32	14-17/32	CV50	**W5703H-CV50**
i	5xD	2.244 - 2.480	57.00 - 62.99	12-3/8	15-31/64	19-31/64	CV50	**W5705H-CV50**
i	8xD	2.244 - 2.480	57.00 - 62.99	19-7/8	22-15/16	26-15/16	CV50	⚠ **W5708H-CV50**
i	10xD	2.244 - 2.480	57.00 - 62.99	24-3/4	27-57/64	31-57/64	CV50	⚠ **W5710H-CV50**

Connection Accessories

Mounting Screw	Mounting Screw Driver	Admissible Tightening Torque*
75020-IP20-1	8IP-20	60 in-lb (678 N-cm)

*Tightening torques are calculated with a friction coefficient of μ = 0.14 and develop 90% of ultimate yield strength.

⚠ **WARNING** Refer to Speed and Feed charts for recommended adjustments to speeds and feeds. Refer to page A50: 30 for deep hole drilling guidelines in this section of the catalog. Visit **www.alliedmachine.com/DeepHoleGuidelines** for the most up-to-date information and procedures. Factory technical assistance is available for your specific applications through our Application Engineering Team.
ext: **7611** | *email:* **appeng@alliedmachine.com**

i = Imperial (in)
m = Metric (mm)
Mounting screws sold in multiples of 4.

APX Drill Heads

63 Series | Diameter Range: 2.480" - 2.756" (63.00 mm - 69.99 mm)

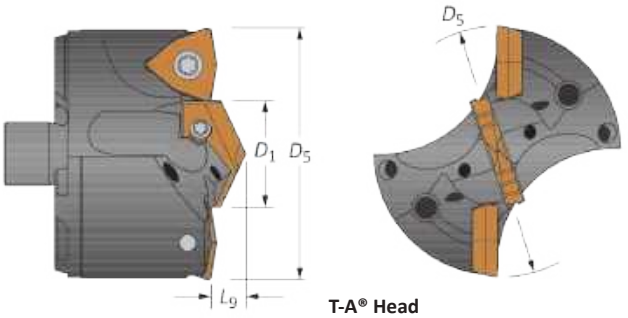

T-A® Head

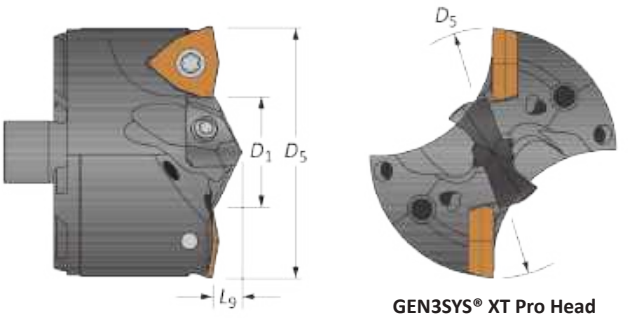

GEN3SYS® XT Pro Head

Heads

Head					T-A Head				GEN3SYS XT Pro Head			IC Insert Size	
D_5 fractional	D_5 inch	D_5 metric	D_1	L_9	Part No.	Pilot Series	T-A Pro Insert	T-A (-TC) Insert	Part No.	Pilot Series	Pilot Insert	inch	metric
-	2.480	63.00	1-1/8	7/16	**V6302D-63**	2	TA#2-28.58	1C12H-0104-TC	**V6326D-63**	26	XT#26-28.58	9/16	14.29
2-1/2	2.500	63.50	1-1/8	7/16	**V6302D-0216**	2	TA#2-28.58	1C12H-0104-TC	**V6326D-0216**	26	XT#26-28.58	9/16	14.29
-	2.520	64.00	1-1/8	7/16	**V6302D-64**	2	TA#2-28.58	1C12H-0104-TC	**V6326D-64**	26	XT#26-28.58	9/16	14.29
2-17/32	2.531	64.29	1-1/8	7/16	**V6302D-0217**	2	TA#2-28.58	1C12H-0104-TC	**V6326D-0217**	26	XT#26-28.58	9/16	14.29
-	2.559	65.00	1-1/8	7/16	**V6302D-65**	2	TA#2-28.58	1C12H-0104-TC	**V6326D-65**	26	XT#26-28.58	9/16	14.29
2-9/16	2.563	65.09	1-3/16	7/16	**V6302D-0218**	2	TA#2-30.16	1C12H-0106-TC	**V6329D-0218**	29	XT#29-30.16	9/16	14.29
2-19/32	2.594	65.88	1-3/16	7/16	**V6302D-0219**	2	TA#2-30.16	1C12H-0106-TC	**V6329D-0219**	29	XT#29-30.16	9/16	14.29
-	2.598	66.00	1-3/16	7/16	**V6302D-66**	2	TA#2-30.16	1C12H-0106-TC	**V6329D-66**	29	XT#29-30.16	9/16	14.29
2-5/8	2.625	66.68	1-3/16	7/16	**V6302D-0220**	2	TA#2-30.16	1C12H-0106-TC	**V6329D-0220**	29	XT#29-30.16	9/16	14.29
-	2.638	67.00	1-1/4	7/16	**V6302D-67**	2	TA#2-31.75	1C12H-0108-TC	**V6329D-67**	29	XT#29-31.75	9/16	14.29
2-21/32	2.656	67.47	1-1/4	7/16	**V6302D-0221**	2	TA#2-31.75	1C12H-0108-TC	**V6329D-0221**	29	XT#29-31.75	9/16	14.29
-	2.677	68.00	1-1/4	7/16	**V6302D-68**	2	TA#2-31.75	1C12H-0108-TC	**V6329D-68**	29	XT#29-31.75	9/16	14.29
2-11/16	2.688	68.26	1-1/4	7/16	**V6302D-0222**	2	TA#2-31.75	1C12H-0108-TC	**V6329D-0222**	29	XT#29-31.75	9/16	14.29
-	2.717	69.00	1-5/16	7/16	**V6302D-69**	2	TA#2-33.34	1C12H-0110-TC	**V6332D-69**	32	XT#32-33.34	9/16	14.29
2-23/32	2.719	69.06	1-5/16	7/16	**V6302D-0223**	2	TA#2-33.34	1C12H-0110-TC	**V6332D-0223**	32	XT#32-33.34	9/16	14.29
2-3/4	2.750	69.85	1-5/16	7/16	**V6302D-0224**	2	TA#2-33.34	1C12H-0110-TC	**V6332D-0224**	32	XT#32-33.34	9/16	14.29

#Denotes ISO material/geometry (P= steel, K= cast iron, N= nonferrous).

IC Inserts

Coating	Size inch	Size metric	Grade	Geometry	Part No.	Insert Screw	Insert Driver	Admissible Tightening Torque*
AM300®	9/16	14.29	C5 (P35)	Standard	**OP-090608-PW**	75014-IP20-1	8IP-20	121.0 in-lbs (1370 N-cm)
AM300®	9/16	14.29	C1 (K35)	Standard	**OP-090608-1PW**	75014-IP20-1	8IP-20	121.0 in-lbs (1370 N-cm)
AM300®	9/16	14.29	C2 (K25)	Standard	**OP-090608-2PW**	75014-IP20-1	8IP-20	121.0 in-lbs (1370 N-cm)
AM300®	9/16	14.29	C5 (P35)	High Rake	**OP-090608-PWHR**	75014-IP20-1	8IP-20	121.0 in-lbs (1370 N-cm)

*Tightening torques are calculated with a friction coefficient of μ = 0.14 and develop 90% of ultimate yield strength.

Pilot Accessories

Pilot Style	Series	Insert Screws	Insert Driver	Admissible Tightening Torque*
T-A	2	7495-IP15-1	8IP-15	61.0 in-lbs (690 N-cm)
GEN3SYS	26	7495-IP15-1	8IP-15	61.0 in-lbs (690 N-cm)
GEN3SYS	29	7495-IP15-1	8IP-15	61.0 in-lbs (690 N-cm)
GEN3SYS	32	7495-IP15-1	8IP-15	61.0 in-lbs (690 N-cm)

*Tightening torques are calculated with a friction coefficient of μ = 0.14 and develop 90% of ultimate yield strength.

A50: 28 - 29 | A50: 2 - 5 | Section A20 | Section A25 & A30

Key on A50: 1

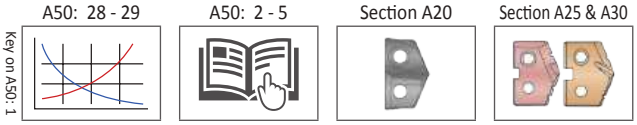

Nonstocked diameters are also available. Follow the examples shown below.

Inch	38 series, T-A (1 series), 1.6790"	Part No. = **V3801D-1.6790**
Metric	38 series, T-A (1 series), 42.15 mm	Part No. = **V3801D-42.15**

IC inserts sold in multiples of 2. | Insert screws sold in multiples of 10.

APX Drill Holders

63 Series | Diameter Range: 2.480" - 2.756" (63.00 mm - 69.99 mm)

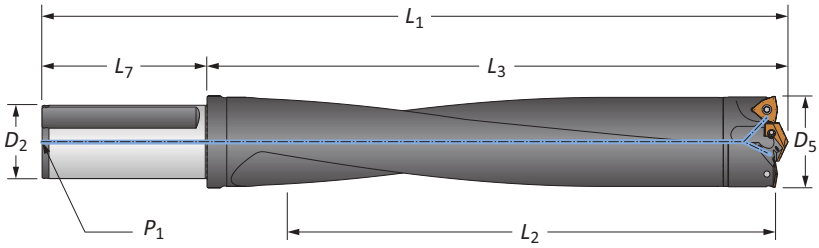

Straight Shank

	Length	D_5	Body L_2	Body L_3	Body L_1	Shank L_7	Shank D_2	Shank P_1	Part No.
i	3xD	2.480 - 2.756	7-7/8	10-11/32	14-27/32	4-1/2	2	1/4 NPT	**W6303H-200F**
i	5xD	2.480 - 2.756	13-3/4	15-27/32	20-11/32	4-1/2	2	1/4 NPT	**W6305H-200F**
i	8xD	2.480 - 2.756	22-1/8	24-1/8	28-5/8	4-1/2	2	1/4 NPT	⚠ **W6308H-200F**
i	10xD	2.480 - 2.756	27-1/8	29-11/64	33-43/64	4-1/2	2	1/4 NPT	⚠ **W6310H-200F**
m	3xD	63.00 - 69.99	200.81	262.61	342.60	80.00	50.00	1/4 BSPT	**W6303H-50FM**
m	5xD	63.00 - 69.99	350.00	402.59	482.60	80.00	50.00	1/4 BSPT	**W6305H-50FM**
m	8xD	63.00 - 69.99	559.99	612.60	692.61	80.00	50.00	1/4 BSPT	⚠ **W6308H-50FM**
m	10xD	63.00 - 69.99	688.29	740.89	820.90	80.00	50.00	1/4 BSPT	⚠ **W6310H-50FM**

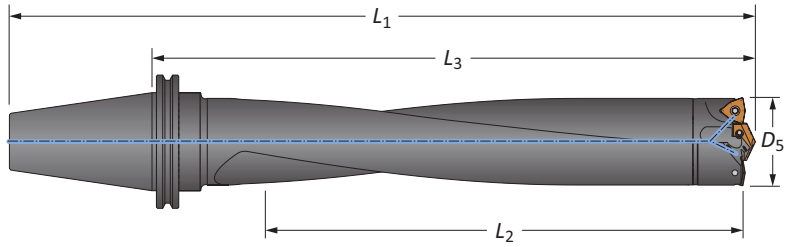

CV50 Shank

	Length	D_5 inch	D_5 mm	Body L_2	Body L_3	Body L_1	Shank	Part No.
i	3xD	2.480 - 2.756	63.00 - 69.99	7-7/8	11-7/16	15-7/16	CV50	**W6303H-CV50**
i	5xD	2.480 - 2.756	63.00 - 69.99	13-3/4	16-15/16	20-15/16	CV50	**W6305H-CV50**
i	8xD	2.480 - 2.756	63.00 - 69.99	22	25-13/64	29-13/64	CV50	⚠ **W6308H-CV50**
i	10xD	2.480 - 2.756	63.00 - 69.99	26-1/2	29-43/64	33-43/64	CV50	⚠ **W6310H-CV50**

Connection Accessories

Mounting Screw	Mounting Screw Driver	Admissible Tightening Torque*
75020-IP20-1	8IP-20	60 in-lb (678 N-cm)

*Tightening torques are calculated with a friction coefficient of μ = 0.14 and develop 90% of ultimate yield strength.

⚠ **WARNING** Refer to Speed and Feed charts for recommended adjustments to speeds and feeds. Refer to page A50: 30 for deep hole drilling guidelines in this section of the catalog. Visit **www.alliedmachine.com/DeepHoleGuidelines** for the most up-to-date information and procedures. Factory technical assistance is available for your specific applications through our Application Engineering Team.
ext: **7611** | *email:* **appeng@alliedmachine.com**

i = Imperial (in)
m = Metric (mm)
Mounting screws sold in multiples of 4.

APX Drill Heads

70 Series | Diameter Range: 2.756" - 2.992" (70.00 mm - 75.99 mm)

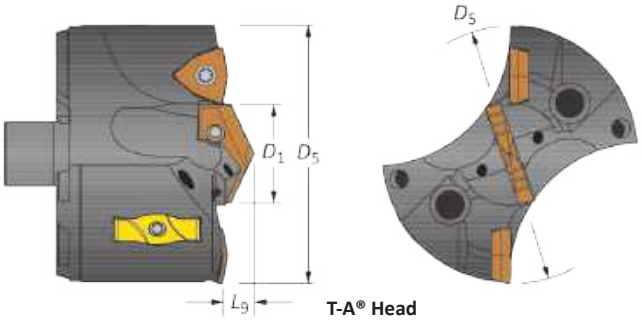

T-A® Head

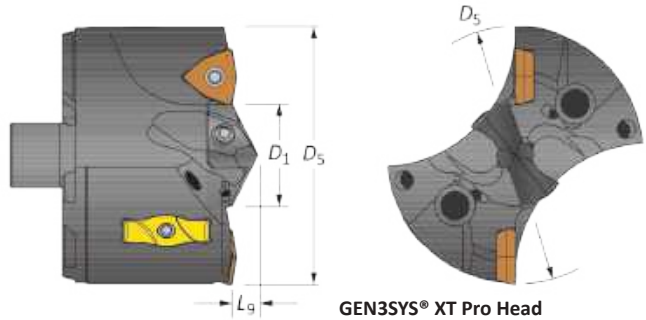

GEN3SYS® XT Pro Head

Heads

Head					T-A Head				GEN3SYS XT Pro Head			IC Insert Size	
D_5 fractional	D_5 inch	D_5 metric	D_1	L_9	Part No.	Pilot Series	T-A Pro Insert	T-A (-TC) Insert	Part No.	Pilot Series	Pilot Insert	inch	metric
-	2.756	70.00	1-7/32	25/64	**V7002S-70**	2	TA#2-30.96	1C12H-0107-TC	**V7029S-70**	29	XT#29-30.96	3/8	9.53
2-13/16	2.813	71.44	1-7/32	25/64	**V7002S-0226**	2	TA#2-30.96	1C12H-0107-TC	**V7029S-0226**	29	XT#29-30.96	3/8	9.53
-	2.835	72.00	1-7/32	25/64	**V7002S-72**	2	TA#2-30.96	1C12H-0107-TC	**V7029S-72**	29	XT#29-30.96	3/8	9.53
2-7/8	2.875	73.03	1-7/32	25/64	**V7002S-0228**	2	TA#2-30.96	1C12H-0107-TC	**V7029S-0228**	29	XT#29-30.96	3/8	9.53
-	2.913	74.00	1-7/32	25/64	**V7002S-74**	2	TA#2-30.96	1C12H-0107-TC	**V7029S-74**	29	XT#29-30.96	3/8	9.53
2-15/16	2.938	74.61	1-7/32	25/64	**V7002S-0230**	2	TA#2-30.96	1C12H-0107-TC	**V7029S-0230**	29	XT#29-30.96	3/8	9.53

#Denotes ISO material/geometry (P= steel, K= cast iron, N= nonferrous).

IC Inserts

Coating	Size inch	Size metric	Grade	Geometry	Part No.	Insert Screw	Insert Driver	Admissible Tightening Torque*
AM300®	3/8	9.53	C5 (P35)	Standard	**OP-060408-PW**	73595-IP15-1	8IP-15	41.0 in-lbs (465 N-cm)
AM300®	3/8	9.53	C1 (K35)	Standard	**OP-060408-1PW**	73595-IP15-1	8IP-15	41.0 in-lbs (465 N-cm)
AM300®	3/8	9.53	C2 (K25)	Standard	**OP-060408-2PW**	73595-IP15-1	8IP-15	41.0 in-lbs (465 N-cm)
AM300®	3/8	9.53	C5 (P35)	High Rake	**OP-060408-PWHR**	73595-IP15-1	8IP-15	41.0 in-lbs (465 N-cm)

*Tightening torques are calculated with a friction coefficient of μ = 0.14 and develop 90% of ultimate yield strength.

Wear Pads

Part No.	Wear Pad Screw	Wear Pad Driver	Admissible Tightening Torque*
WP7095	7358-IP10-1	8IP-10	27.0 in-lbs (300 N-cm)

*Tightening torques are calculated with a friction coefficient of μ = 0.14 and develop 90% of ultimate yield strength.
NOTE: Wear pads included with head.

Pilot Accessories

Pilot Style	Series	Insert Screws	Insert Driver	Admissible Tightening Torque*
T-A	2	7495-IP15-1	8IP-15	61.0 in-lbs (690 N-cm)
GEN3SYS	29	7495-IP15-1	8IP-15	61.0 in-lbs (690 N-cm)

*Tightening torques are calculated with a friction coefficient of μ = 0.14 and develop 90% of ultimate yield strength.

Key on A50: 1

A50: 28 - 29

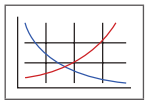

A50: 2 - 5

Section A20

Section A25 & A30

Nonstocked diameters are also available. Follow the examples shown below.

Inch	38 series, T-A (1 series), 1.6790"	Part No. = **V3801D-1.6790**
Metric	38 series, T-A (1 series), 42.15 mm	Part No. = **V3801D-42.15**

Wear pads sold in multiples of 2. | Wear pad screws sold in multiples of 4.
IC inserts sold in multiples of 2. | Insert screws sold in multiples of 10.

APX Drill Holders

70 Series | Diameter Range: 2.756" - 2.992" (70.00 mm - 75.99 mm)

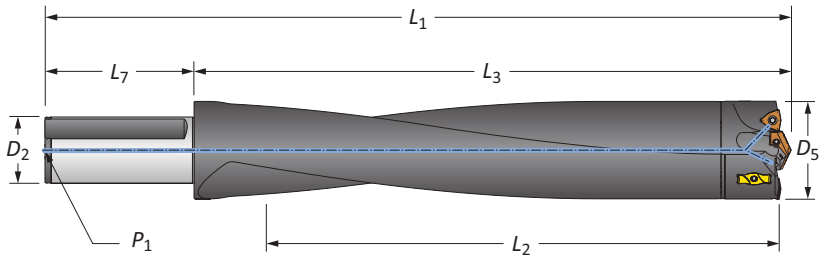

Straight Shank

	Length	D_5	Body L_2	Body L_3	Body L_1	Shank L_7	Shank D_2	Shank P_1	Part No.
i	3xD	2.756 - 2.992	8-3/4	10-19/32	15-3/32	4-1/2	2	1/4 NPT	**W7003H-200F**
	5xD	2.756 - 2.992	14-7/8	16-37/64	21-5/64	4-1/2	2	1/4 NPT	**W7005H-200F**
	8xD	2.756 - 2.992	23-7/8	25-35/64	30-3/64	4-1/2	2	1/4 NPT	⚠ **W7008H-200F**
	10xD	2.756 - 2.992	27-7/8	29-35/64	34-3/64	4-1/2	2	1/4 NPT	⚠ **W7010H-200F**
m	3xD	70.00 - 75.99	218.80	269.01	349.00	80.00	50.00	1/4 BSPT	**W7003H-50FM**
	5xD	70.00 - 75.99	380.01	421.11	501.09	80.00	50.00	1/4 BSPT	**W7005H-50FM**
	8xD	70.00 - 75.99	608.00	649.00	729.01	80.00	50.00	1/4 BSPT	⚠ **W7008H-50FM**
	10xD	70.00 - 75.99	709.40	750.29	830.30	80.00	50.00	1/4 BSPT	⚠ **W7010H-50FM**

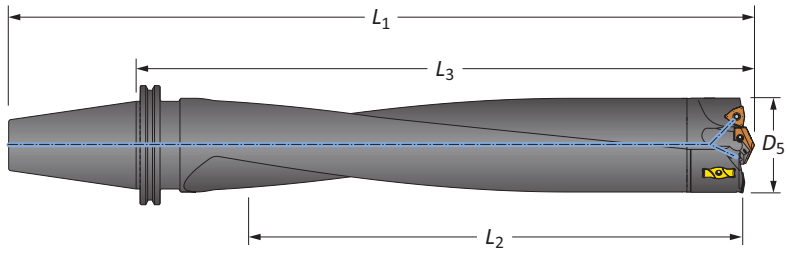

CV50 Shank

	Length	D_5 inch	D_5 mm	Body L_2	Body L_3	Body L_1	Shank	Part No.
i	3xD	2.756 - 2.992	70.00 - 75.99	8-3/4	12-7/32	16-7/32	CV50	**W7003H-CV50**
	5xD	2.756 - 2.992	70.00 - 75.99	14-7/8	18-13/64	22-13/64	CV50	**W7005H-CV50**
	8xD	2.756 - 2.992	70.00 - 75.99	23-7/8	27-5/32	31-5/32	CV50	⚠ **W7008H-CV50**
	10xD	2.756 - 2.992	70.00 - 75.99	26-3/4	29-61/64	33-61/64	CV50	⚠ **W7010H-CV50**

Connection Accessories

Mounting Screw	Mounting Screw Bit	Admissible Tightening Torque*
78027-IP30-1	8IP-30B	250 in-lb (2825 N-cm)

*Tightening torques are calculated with a friction coefficient of μ = 0.14 and develop 90% of ultimate yield strength.

⚠ **WARNING** Refer to Speed and Feed charts for recommended adjustments to speeds and feeds. Refer to page A50: 30 for deep hole drilling guidelines in this section of the catalog. Visit **www.alliedmachine.com/DeepHoleGuidelines** for the most up-to-date information and procedures. Factory technical assistance is available for your specific applications through our Application Engineering Team.
ext: **7611** | *email:* **appeng@alliedmachine.com**

i = Imperial (in)
m = Metric (mm)
Mounting screws sold in multiples of 4.

APX Drill Heads

76 Series | Diameter Range: 2.992" - 3.268" (76.00 mm - 82.99 mm)

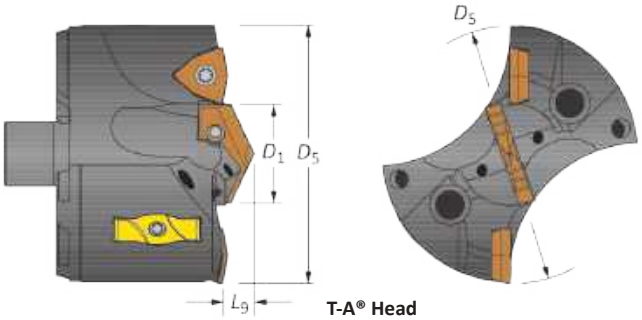

T-A® Head

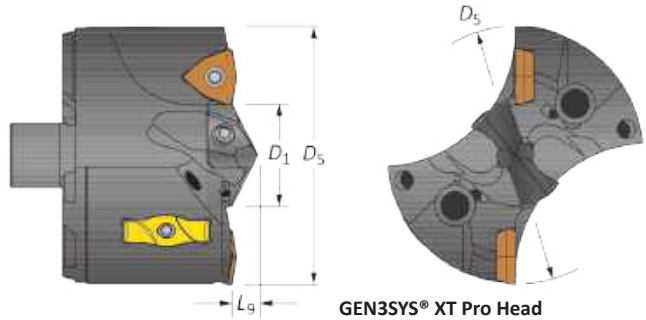

GEN3SYS® XT Pro Head

Heads

Head					T-A Head				GEN3SYS XT Pro Head			IC Insert Size	
D_5 fractional	D_5 inch	D_5 metric	D_1	L_9	Part No.	Pilot Series	T-A Pro Insert	T-A (-TC) Insert	Part No.	Pilot Series	Pilot Insert	inch	metric
-	2.992	76.00	1-7/32	13/32	**V7602S-76**	2	TA#2-30.96	1C12H-0107-TC	**V7629S-76**	29	XT#29-30.96	1/2	12.70
3	3.000	76.20	1-7/32	13/32	**V7602S-0300**	2	TA#2-30.96	1C12H-0107-TC	**V7629S-0300**	29	XT#29-30.96	1/2	12.70
3-1/16	3.063	77.79	1-7/32	13/32	**V7602S-0302**	2	TA#2-30.96	1C12H-0107-TC	**V7629S-0302**	29	XT#29-30.96	1/2	12.70
-	3.071	78.00	1-7/32	13/32	**V7602S-78**	2	TA#2-30.96	1C12H-0107-TC	**V7629S-78**	29	XT#29-30.96	1/2	12.70
3-1/8	3.125	79.38	1-7/32	13/32	**V7602S-0304**	2	TA#2-30.96	1C12H-0107-TC	**V7629S-0304**	29	XT#29-30.96	1/2	12.70
-	3.150	80.00	1-7/32	13/32	**V7602S-80**	2	TA#2-30.96	1C12H-0107-TC	**V7629S-80**	29	XT#29-30.96	1/2	12.70
3-3/16	3.188	80.96	1-7/32	13/32	**V7602S-0306**	2	TA#2-30.96	1C12H-0107-TC	**V7629S-0306**	29	XT#29-30.96	1/2	12.70
-	3.228	82.00	1-7/32	13/32	**V7602S-82**	2	TA#2-30.96	1C12H-0107-TC	**V7629S-82**	29	XT#29-30.96	1/2	12.70
3-1/4	3.250	82.55	1-7/32	13/32	**V7602S-0308**	2	TA#2-30.96	1C12H-0107-TC	**V7629S-0308**	29	XT#29-30.96	1/2	12.70

#Denotes ISO material/geometry (P= steel, K= cast iron, N= nonferrous).

IC Inserts

Coating	Size inch	Size metric	Grade	Geometry	Part No.	Insert Screw	Insert Driver	Admissible Tightening Torque*
AM300®	1/2	12.70	C5 (P35)	Standard	**OP-080508-PW**	74012-IP15-1	8IP-15	61.0 in-lbs (690 N-cm)
AM300®	1/2	12.70	C1 (K35)	Standard	**OP-080508-1PW**	74012-IP15-1	8IP-15	61.0 in-lbs (690 N-cm)
AM300®	1/2	12.70	C2 (K25)	Standard	**OP-080508-2PW**	74012-IP15-1	8IP-15	61.0 in-lbs (690 N-cm)
AM300®	1/2	12.70	C5 (P35)	High Rake	**OP-080508-PWHR**	74012-IP15-1	8IP-15	61.0 in-lbs (690 N-cm)

*Tightening torques are calculated with a friction coefficient of μ = 0.14 and develop 90% of ultimate yield strength.

Wear Pads

Part No.	Wear Pad Screw	Wear Pad Driver	Admissible Tightening Torque*
WP7095	7358-IP10-1	8IP-10	27.0 in-lbs (300 N-cm)

*Tightening torques are calculated with a friction coefficient of μ = 0.14 and develop 90% of ultimate yield strength.
NOTE: Wear pads included with head.

Pilot Accessories

Pilot Style	Series	Insert Screws	Insert Driver	Admissible Tightening Torque*
T-A	2	7495-IP15-1	8IP-15	61.0 in-lbs (690 N-cm)
GEN3SYS	29	7495-IP15-1	8IP-15	61.0 in-lbs (690 N-cm)

*Tightening torques are calculated with a friction coefficient of μ = 0.14 and develop 90% of ultimate yield strength.

A50: 28 - 29
Key on A50: 1
A50: 2 - 5
Section A20
Section A25 & A30

Nonstocked diameters are also available. Follow the examples shown below.

Inch	38 series, T-A (1 series), 1.6790"	Part No. = **V3801D-1.6790**
Metric	38 series, T-A (1 series), 42.15 mm	Part No. = **V3801D-42.15**

Wear pads sold in multiples of 2. | Wear pad screws sold in multiples of 4.
IC inserts sold in multiples of 2. | Insert screws sold in multiples of 10.

APX Drill Holders

76 Series | Diameter Range: 2.992" - 3.268" (76.00 mm - 82.99 mm)

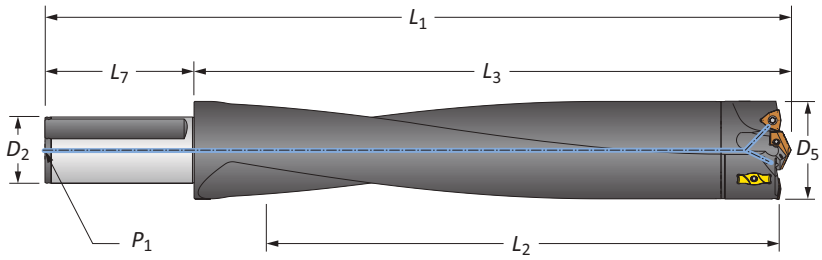

Straight Shank

	Length	D_5	Body L_2	Body L_3	Body L_1	Shank L_7	Shank D_2	Shank P_1	Part No.
i	3xD	2.992 - 3.268	9-1/2	11-33/64	16-1/64	4-1/2	2	1/4 NPT	**W7603H-200F**
i	5xD	2.992 - 3.268	16-3/8	18-3/64	22-35/64	4-1/2	2	1/4 NPT	**W7605H-200F**
i	8xD	2.992 - 3.268	26-1/8	27-27/32	32-11/32	4-1/2	2	1/4 NPT	⚠ **W7608H-200F**
i	10xD	2.992 - 3.268	32-15/16	34-25/64	38-7/8	4-1/2	2	1/4 NPT	⚠ **W7610H-200F**
m	3xD	76.00 - 82.99	240.00	292.40	372.39	80.00	50.00	1/4 BSPT	**W7603H-50FM**
m	5xD	76.00 - 82.99	415.01	421.11	501.09	80.00	50.00	1/4 BSPT	**W7605H-50FM**
m	8xD	76.00 - 82.99	664.01	648.69	728.70	80.00	50.00	1/4 BSPT	⚠ **W7608H-50FM**
m	10xD	76.00 - 82.99	836.58	873.38	953.38	80.00	50.00	1/4 BSPT	⚠ **W7610H-50FM**

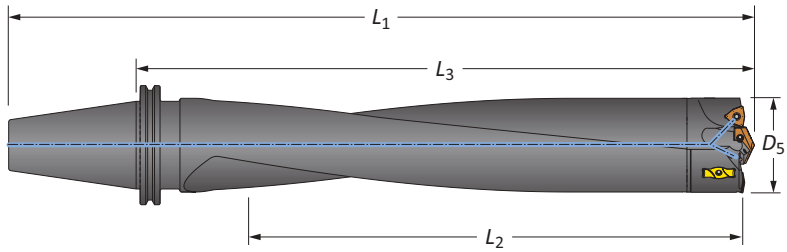

CV50 Shank

	Length	D_5 inch	D_5 mm	Body L_2	Body L_3	Body L_1	Shank	Part No.
i	3xD	2.992 - 3.268	76.00 - 82.99	9-1/2	12-57/64	16-57/64	CV50	**W7603H-CV50**
i	5xD	2.992 - 3.268	76.00 - 82.99	16-3/8	19-27/64	23-27/64	CV50	**W7605H-CV50**
i	8xD	2.992 - 3.268	76.00 - 82.99	26-1/8	29-7/32	33-7/32	CV50	⚠ **W7608H-CV50**
i	10xD	2.992 - 3.268	76.00 - 82.99	32-15/16	35-41/64	39-49/64	CV50	⚠ **W7610H-CV50**

Connection Accessories

Mounting Screw	Mounting Screw Bit	Admissible Tightening Torque*
78027-IP30-1	8IP-30B	250 in-lb (2825 N-cm)

*Tightening torques are calculated with a friction coefficient of μ = 0.14 and develop 90% of ultimate yield strength.

⚠ WARNING Refer to Speed and Feed charts for recommended adjustments to speeds and feeds. Refer to page A50: 30 for deep hole drilling guidelines in this section of the catalog. Visit **www.alliedmachine.com/DeepHoleGuidelines** for the most up-to-date information and procedures. Factory technical assistance is available for your specific applications through our Application Engineering Team.
ext: **7611** | *email:* **appeng@alliedmachine.com**

i = Imperial (in)
m = Metric (mm)
Mounting screws sold in multiples of 4.

APX Drill Heads

83 Series | Diameter Range: 3.268" - 3.504" (83.00 mm - 88.99 mm)

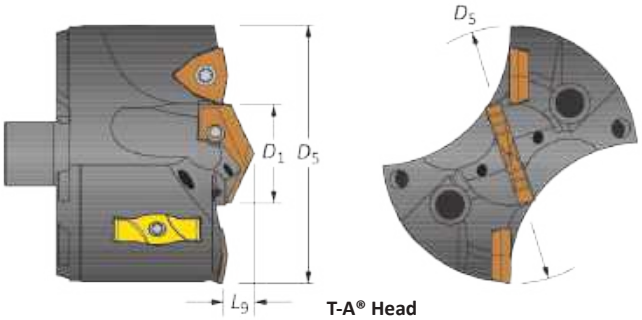

T-A® Head

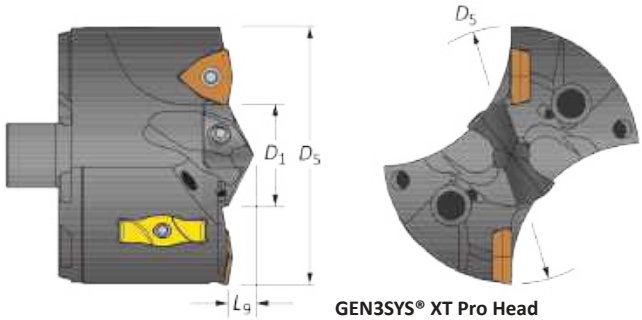

GEN3SYS® XT Pro Head

Heads

Head					T-A Head				GEN3SYS XT Pro Head			IC Insert Size	
D_5 fractional	D_5 inch	D_5 metric	D_1	L_9	Part No.	Pilot Series	T-A Pro Insert	T-A (-TC) Insert	Part No.	Pilot Series	Pilot Insert	inch	metric
-	3.307	84.00	1-3/8	7/16	**V8302S-84**	2	TA#2-34.93	1C12H-0112-TC	**V8332S-84**	32	XT#32-34.93	1/2	12.70
3-5/16	3.313	84.14	1-3/8	7/16	**V8302S-0310**	2	TA#2-34.93	1C12H-0112-TC	**V8332S-0310**	32	XT#32-34.93	1/2	12.70
3-3/8	3.375	85.73	1-3/8	7/16	**V8302S-0312**	2	TA#2-34.93	1C12H-0112-TC	**V8332S-0312**	32	XT#32-34.93	1/2	12.70
-	3.386	86.00	1-3/8	7/16	**V8302S-86**	2	TA#2-34.93	1C12H-0112-TC	**V8332S-86**	32	XT#32-34.93	1/2	12.70
3-7/16	3.438	87.31	1-3/8	7/16	**V8302S-0314**	2	TA#2-34.93	1C12H-0112-TC	**V8332S-0314**	32	XT#32-34.93	1/2	12.70
-	3.465	88.00	1-3/8	7/16	**V8302S-88**	2	TA#2-34.93	1C12H-0112-TC	**V8332S-88**	32	XT#32-34.93	1/2	12.70
3-1/2	3.500	88.90	1-3/8	7/16	**V8302S-0316**	2	TA#2-34.93	1C12H-0112-TC	**V8332S-0316**	32	XT#32-34.93	1/2	12.70

#Denotes ISO material/geometry (P= steel, K= cast iron, N= nonferrous).

IC Inserts

Coating	Size inch	Size metric	Grade	Geometry	Part No.	Insert Screw	Insert Driver	Admissible Tightening Torque*
AM300®	1/2	12.70	C5 (P35)	Standard	**OP-080508-PW**	74012-IP15-1	8IP-15	61.0 in-lbs (690 N-cm)
AM300®	1/2	12.70	C1 (K35)	Standard	**OP-080508-1PW**	74012-IP15-1	8IP-15	61.0 in-lbs (690 N-cm)
AM300®	1/2	12.70	C2 (K25)	Standard	**OP-080508-2PW**	74012-IP15-1	8IP-15	61.0 in-lbs (690 N-cm)
AM300®	1/2	12.70	C5 (P35)	High Rake	**OP-080508-PWHR**	74012-IP15-1	8IP-15	61.0 in-lbs (690 N-cm)

*Tightening torques are calculated with a friction coefficient of μ = 0.14 and develop 90% of ultimate yield strength.

Wear Pads

Part No.	Wear Pad Screw	Wear Pad Driver	Admissible Tightening Torque*
WP7095	7358-IP10-1	8IP-10	27.0 in-lbs (300 N-cm)

*Tightening torques are calculated with a friction coefficient of μ = 0.14 and develop 90% of ultimate yield strength.
NOTE: Wear pads included with head.

Pilot Accessories

Pilot Style	Series	Insert Screws	Insert Driver	Admissible Tightening Torque*
T-A	2	7495-IP15-1	8IP-15	61.0 in-lbs (690 N-cm)
GEN3SYS	32	7495-IP15-1	8IP-15	61.0 in-lbs (690 N-cm)

*Tightening torques are calculated with a friction coefficient of μ = 0.14 and develop 90% of ultimate yield strength.

A50: 28 - 29 | A50: 2 - 5 | Section A20 | Section A25 & A30

Key on A50: 1

Nonstocked diameters are also available. Follow the examples shown below.

Inch	38 series, T-A (1 series), 1.6790"	Part No. = **V3801D-1.6790**
Metric	38 series, T-A (1 series), 42.15 mm	Part No. = **V3801D-42.15**

Wear pads sold in multiples of 2. | Wear pad screws sold in multiples of 4.
IC inserts sold in multiples of 2. | Insert screws sold in multiples of 10.

APX Drill Holders

83 Series | Diameter Range: 3.268" - 3.504" (83.00 mm - 88.99 mm)

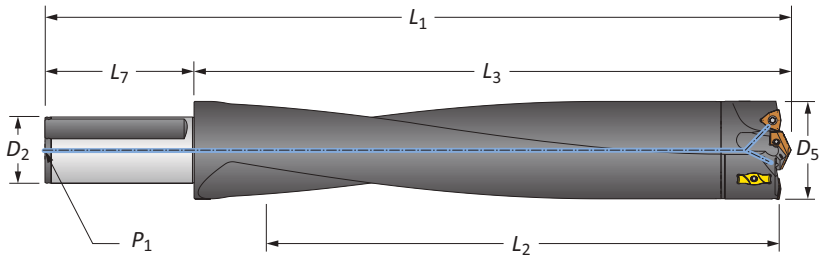

Straight Shank

	Length	D_5	Body L_2	Body L_3	Body L_1	Shank L_7	Shank D_2	Shank P_1	Part No.
i	3xD	3.268 - 3.504	10-1/8	12-5/16	16-13/16	4-1/2	2	1/4 NPT	**W8303H-200F**
i	5xD	3.268 - 3.504	17-1/2	19-5/16	23-13/16	4-1/2	2	1/4 NPT	**W8305H-200F**
i	8xD	3.268 - 3.504	27-3/4	29-35/64	34-3/64	4-1/2	2	1/4 NPT	⚠ **W8308H-200F**
i	10xD	3.268 - 3.504	35-1/4	36-53/64	41-21/64	4-1/2	2	1/4 NPT	⚠ **W8310H-200F**
m	3xD	83.00 - 88.99	257.81	312.50	392.61	80.00	50.00	1/4 BSPT	**W8303H-50FM**
m	5xD	83.00 - 88.99	445.00	490.50	570.51	80.00	50.00	1/4 BSPT	**W8305H-50FM**
m	8xD	83.00 - 88.99	704.90	750.29	830.30	80.00	50.00	1/4 BSPT	⚠ **W8308H-50FM**
m	10xD	83.00 - 88.99	895.51	935.42	1015.42	80.00	50.00	1/4 BSPT	⚠ **W8310H-50FM**

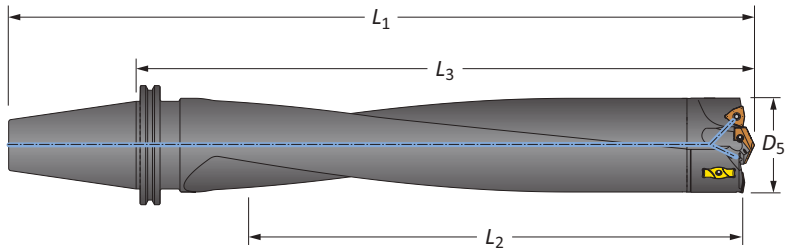

CV50 Shank

	Length	D_5 inch	D_5 mm	Body L_2	Body L_3	Body L_1	Shank	Part No.
i	3xD	3.268 - 3.504	83.00 - 88.99	10-1/8	13-11/16	17-11/16	CV50	**W8303H-CV50**
i	5xD	3.268 - 3.504	83.00 - 88.99	17-1/2	20-11/16	24-11/16	CV50	**W8305H-CV50**
i	8xD	3.268 - 3.504	83.00 - 88.99	26-7/8	30-3/64	34-3/64	CV50	⚠ **W8308H-CV50**
i	10xD	3.268 - 3.504	83.00 - 88.99	35-1/4	38-5/64	42-7/32	CV50	⚠ **W8310H-CV50**

Connection Accessories

Mounting Screw	Mounting Screw Bit	Admissible Tightening Torque*
78027-IP30-1	8IP-30B	250 in-lb (2825 N-cm)

*Tightening torques are calculated with a friction coefficient of μ = 0.14 and develop 90% of ultimate yield strength.

⚠ **WARNING** Refer to Speed and Feed charts for recommended adjustments to speeds and feeds. Refer to page A50: 30 for deep hole drilling guidelines in this section of the catalog. Visit **www.alliedmachine.com/DeepHoleGuidelines** for the most up-to-date information and procedures. Factory technical assistance is available for your specific applications through our Application Engineering Team.
ext: **7611** | *email:* **appeng@alliedmachine.com**

i = Imperial (in)
m = Metric (mm)
Mounting screws sold in multiples of 4.

APX Drill Heads

89 Series | Diameter Range: 3.504" - 3.740" (89.00 mm - 94.99 mm)

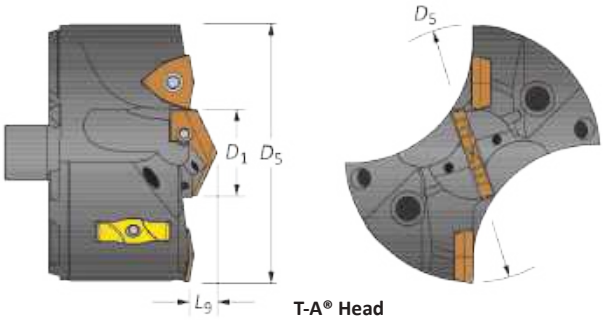

T-A® Head

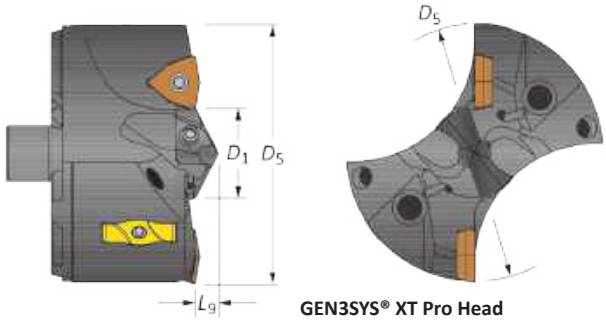

GEN3SYS® XT Pro Head

Heads

Head					T-A Head				GEN3SYS XT Pro Head			IC Insert Size	
D_5 fractional	D_5 inch	D_5 metric	D_1	L_9	Part No.	Pilot Series	T-A Pro Insert	T-A (-TC) Insert	Part No.	Pilot Series	Pilot Insert	inch	metric
-	3.543	90.00	1-1/4	27/64	**V8902S-90**	2	TA#2-31.75	1C12H-0108-TC	**V8929S-90**	29	XT#29-31.75	9/16	14.29
3-9/16	3.563	90.49	1-1/4	27/64	**V8902S-0318**	2	TA#2-31.75	1C12H-0108-TC	**V8929S-0318**	29	XT#29-31.75	9/16	14.29
-	3.622	92.00	1-1/4	27/64	**V8902S-92**	2	TA#2-31.75	1C12H-0108-TC	**V8929S-92**	29	XT#29-31.75	9/16	14.29
3-5/8	3.625	92.08	1-1/4	27/64	**V8902S-0320**	2	TA#2-31.75	1C12H-0108-TC	**V8929S-0320**	29	XT#29-31.75	9/16	14.29
3-11/16	3.688	93.66	1-1/4	27/64	**V8902S-0322**	2	TA#2-31.75	1C12H-0108-TC	**V8929S-0322**	29	XT#29-31.75	9/16	14.29
-	3.701	94.00	1-1/4	27/64	**V8902S-94**	2	TA#2-31.75	1C12H-0108-TC	**V8929S-94**	29	XT#29-31.75	9/16	14.29

#Denotes ISO material/geometry (P= steel, K= cast iron, N= nonferrous).

IC Inserts

Coating	Size inch	Size metric	Grade	Geometry	Part No.	Insert Screw	Insert Driver	Admissible Tightening Torque*
AM300®	9/16	14.29	C5 (P35)	Standard	**OP-090608-PW**	75014-IP20-1	8IP-20	121.0 in-lbs (1370 N-cm)
AM300®	9/16	14.29	C1 (K35)	Standard	**OP-090608-1PW**	75014-IP20-1	8IP-20	121.0 in-lbs (1370 N-cm)
AM300®	9/16	14.29	C2 (K25)	Standard	**OP-090608-2PW**	75014-IP20-1	8IP-20	121.0 in-lbs (1370 N-cm)
AM300®	9/16	14.29	C5 (P35)	High Rake	**OP-090608-PWHR**	75014-IP20-1	8IP-20	121.0 in-lbs (1370 N-cm)

*Tightening torques are calculated with a friction coefficient of μ = 0.14 and develop 90% of ultimate yield strength.

Wear Pads

Part No.	Wear Pad Screw	Wear Pad Driver	Admissible Tightening Torque*
WP7095	7358-IP10-1	8IP-10	27.0 in-lbs (300 N-cm)

*Tightening torques are calculated with a friction coefficient of μ = 0.14 and develop 90% of ultimate yield strength.
NOTE: Wear pads included with head.

Pilot Accessories

Pilot Style	Series	Insert Screws	Insert Driver	Admissible Tightening Torque*
T-A	2	7495-IP15-1	8IP-15	61.0 in-lbs (690 N-cm)
GEN3SYS	29	7495-IP15-1	8IP-15	61.0 in-lbs (690 N-cm)

*Tightening torques are calculated with a friction coefficient of μ = 0.14 and develop 90% of ultimate yield strength.

A50: 28 - 29
Key on A50: 1
A50: 2 - 5
Section A20
Section A25 & A30

Nonstocked diameters are also available. Follow the examples shown below.

Inch	38 series, T-A (1 series), 1.6790"	Part No. = **V3801D-1.6790**
Metric	38 series, T-A (1 series), 42.15 mm	Part No. = **V3801D-42.15**

Wear pads sold in multiples of 2. | Wear pad screws sold in multiples of 4.
IC inserts sold in multiples of 2. | Insert screws sold in multiples of 10.

APX Drill Holders

89 Series | Diameter Range: 3.504" - 3.740" (89.00 mm - 94.99 mm)

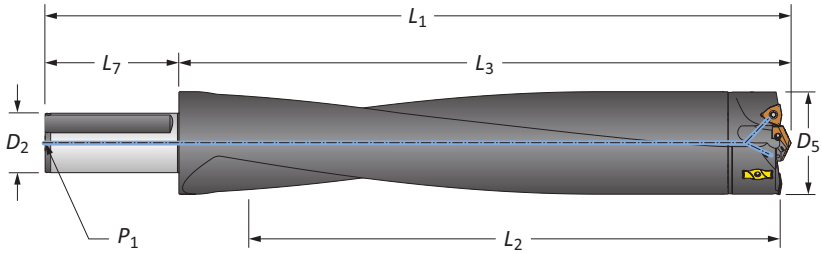

Straight Shank

	Length	D_5	Body L_2	Body L_3	Body L_1	Shank L_7	Shank D_2	Shank P_1	Part No.
i	3xD	3.504 - 3.740	10-7/8	13-1/8	17-5/8	4-1/2	2	1/4 NPT	**W8903H-200F**
i	5xD	3.504 - 3.740	18-5/8	20-5/8	25-1/8	4-1/2	2	1/4 NPT	**W8905H-200F**
i	8xD	3.504 - 3.740	27-5/8	29-35/64	34-3/64	4-1/2	2	1/4 NPT	⚠ **W8908H-200F**
i	10xD	3.504 - 3.740	35-31/32	37-5/8	42-9/64	4-1/2	2	1/4 NPT	⚠ **W8910H-200F**
m	3xD	89.00 - 94.99	275.79	333.60	413.59	80.00	50.00	1/4 BSPT	**W8903H-50FM**
m	5xD	89.00 - 94.99	475.01	523.70	603.71	80.00	50.00	1/4 BSPT	**W8905H-50FM**
m	8xD	89.00 - 94.99	701.80	750.29	830.30	80.00	50.00	1/4 BSPT	⚠ **W8908H-50FM**
m	10xD	89.00 - 94.99	956.27	955.85	1035.85	80.00	50.00	1/4 BSPT	⚠ **W8910H-50FM**

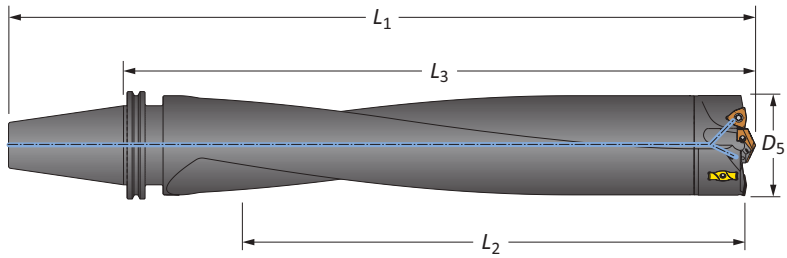

CV50 Shank

	Length	D_5 inch	D_5 mm	Body L_2	Body L_3	Body L_1	Shank	Part No.
i	3xD	3.504 - 3.740	89.00 - 94.99	10-7/8	14-33/64	18-33/64	CV50	**W8903H-CV50**
i	5xD	3.504 - 3.740	89.00 - 94.99	18-5/8	22	26	CV50	**W8905H-CV50**
i	8xD	3.504 - 3.740	89.00 - 94.99	26-3/4	30-1/32	34-1/32	CV50	⚠ **W8908H-CV50**
i	10xD	3.504 - 3.740	89.00 - 94.99	35-31/32	38-7/8	43	CV50	⚠ **W8910H-CV50**

Connection Accessories

Mounting Screw	Mounting Screw Bit	Admissible Tightening Torque*
78027-IP30-1	8IP-30B	250 in-lb (2825 N-cm)

*Tightening torques are calculated with a friction coefficient of μ = 0.14 and develop 90% of ultimate yield strength.

⚠ **WARNING** Refer to Speed and Feed charts for recommended adjustments to speeds and feeds. Refer to page A50: 30 for deep hole drilling guidelines in this section of the catalog. Visit **www.alliedmachine.com/DeepHoleGuidelines** for the most up-to-date information and procedures. Factory technical assistance is available for your specific applications through our Application Engineering Team.
ext: **7611** | *email:* **appeng@alliedmachine.com**

i = Imperial (in)
m = Metric (mm)
Mounting screws sold in multiples of 4.

APX Drill Heads

95 Series | Diameter Range: 3.740" - 4.000" (95.00 mm - 101.60 mm)

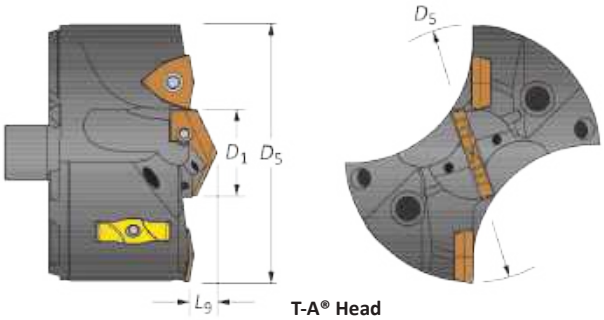

T-A® Head

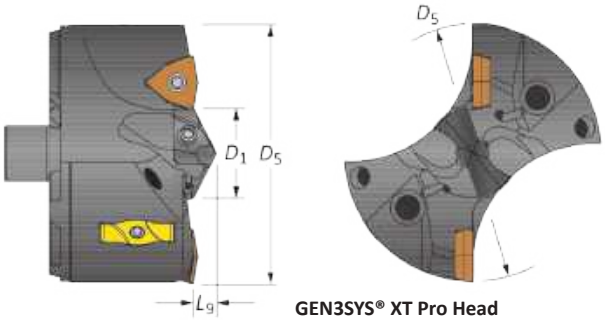

GEN3SYS® XT Pro Head

Heads

Head					T-A Head				GEN3SYS XT Pro Head			IC Insert Size	
D_5 fractional	D_5 inch	D_5 metric	D_1	L_9	Part No.	Pilot Series	T-A Pro Insert	T-A (-TC) Insert	Part No.	Pilot Series	Pilot Insert	inch	metric
3-3/4	3.750	95.25	1-3/8	29/64	**V9502S-0324**	2	TA#2-34.93	1C12H-0112-TC	**V9532S-0324**	32	XT#32-34.93	9/16	14.29
-	3.780	96.00	1-3/8	29/64	**V9502S-96**	2	TA#2-34.93	1C12H-0112-TC	**V9532S-96**	32	XT#32-34.93	9/16	14.29
3-13/16	3.813	96.84	1-3/8	29/64	**V9502S-0326**	2	TA#2-34.93	1C12H-0112-TC	**V9532S-0326**	32	XT#32-34.93	9/16	14.29
-	3.858	98.00	1-3/8	29/64	**V9502S-98**	2	TA#2-34.93	1C12H-0112-TC	**V9532S-98**	32	XT#32-34.93	9/16	14.29
3-7/8	3.875	98.43	1-3/8	29/64	**V9502S-0328**	2	TA#2-34.93	1C12H-0112-TC	**V9532S-0328**	32	XT#32-34.93	9/16	14.29
-	3.937	100.00	1-3/8	29/64	**V9502S-100**	2	TA#2-34.93	1C12H-0112-TC	**V9532S-100**	32	XT#32-34.93	9/16	14.29
3-15/16	3.936	100.01	1-3/8	29/64	**V9502S-0330**	2	TA#2-34.93	1C12H-0112-TC	**V9532S-0330**	32	XT#32-34.93	9/16	14.29
4	4.000	101.60	1-3/8	29/64	**V9502S-0400**	2	TA#2-34.93	1C12H-0112-TC	**V9532S-0400**	32	XT#32-34.93	9/16	14.29

#Denotes ISO material/geometry (P= steel, K= cast iron, N= nonferrous).

IC Inserts

Coating	Size inch	Size metric	Grade	Geometry	Part No.	Insert Screw	Insert Driver	Admissible Tightening Torque*
AM300®	9/16	14.29	C5 (P35)	Standard	**OP-090608-PW**	75014-IP20-1	8IP-20	121.0 in-lbs (1370 N-cm)
AM300®	9/16	14.29	C1 (K35)	Standard	**OP-090608-1PW**	75014-IP20-1	8IP-20	121.0 in-lbs (1370 N-cm)
AM300®	9/16	14.29	C2 (K25)	Standard	**OP-090608-2PW**	75014-IP20-1	8IP-20	121.0 in-lbs (1370 N-cm)
AM300®	9/16	14.29	C5 (P35)	High Rake	**OP-090608-PWHR**	75014-IP20-1	8IP-20	121.0 in-lbs (1370 N-cm)

*Tightening torques are calculated with a friction coefficient of μ = 0.14 and develop 90% of ultimate yield strength.

Wear Pads

Part No.	Wear Pad Screw	Wear Pad Driver	Admissible Tightening Torque*
WP7095	7358-IP10-1	8IP-10	27.0 in-lbs (300 N-cm)

*Tightening torques are calculated with a friction coefficient of μ = 0.14 and develop 90% of ultimate yield strength.
NOTE: Wear pads included with head.

Pilot Accessories

Pilot Style	Series	Insert Screws	Insert Driver	Admissible Tightening Torque*
T-A	2	7495-IP15-1	8IP-15	61.0 in-lbs (690 N-cm)
GEN3SYS	32	7495-IP15-1	8IP-15	61.0 in-lbs (690 N-cm)

*Tightening torques are calculated with a friction coefficient of μ = 0.14 and develop 90% of ultimate yield strength.

A50: 28 - 29
Key on A50: 1

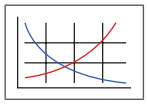

A50: 2 - 5

Section A20

Section A25 & A30

Nonstocked diameters are also available. Follow the examples shown below.

Inch	38 series, T-A (1 series), 1.6790"	Part No. = **V3801D-1.6790**
Metric	38 series, T-A (1 series), 42.15 mm	Part No. = **V3801D-42.15**

Wear pads sold in multiples of 2. | Wear pad screws sold in multiples of 4.
IC inserts sold in multiples of 2. | Insert screws sold in multiples of 10.

APX Drill Holders

95 Series | Diameter Range: 3.740" - 4.000" (95.00 mm - 101.60 mm)

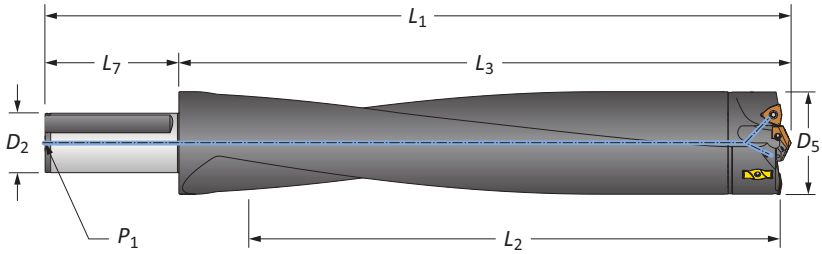

Straight Shank

	Length	D_5	Body L_2	Body L_3	Body L_1	Shank L_7	Shank D_2	Shank P_1	Part No.
i	3xD	3.740 - 4.000	11-7/8	14-9/32	18-25/32	4-1/2	2	1/4 NPT	**W9503H-200F**
i	5xD	3.740 - 4.000	20	22-19/64	26-51/64	4-1/2	2	1/4 NPT	**W9505H-200F**
i	8xD	3.740 - 4.000	27-1/2	29-51/64	34-19/64	4-1/2	2	1/4 NPT	⚠ **W9508H-200F**
i	10xD	3.740 - 4.000	36-5/64	37-57/64	42-25/64	4-1/2	2	1/4 NPT	⚠ **W9510H-200F**
m	3xD	95.00 - 101.60	302.01	362.79	442.80	80.00	50.00	1/4 BSPT	**W9503H-50FM**
m	5xD	95.00 - 101.60	508.00	566.19	646.20	80.00	50.00	1/4 BSPT	**W9505H-50FM**
m	8xD	95.00 - 101.60	699.00	756.69	836.70	80.00	50.00	1/4 BSPT	⚠ **W9508H-50FM**
m	10xD	95.00 - 101.60	972.07	962.28	1042.28	80.00	50.00	1/4 BSPT	⚠ **W9510H-50FM**

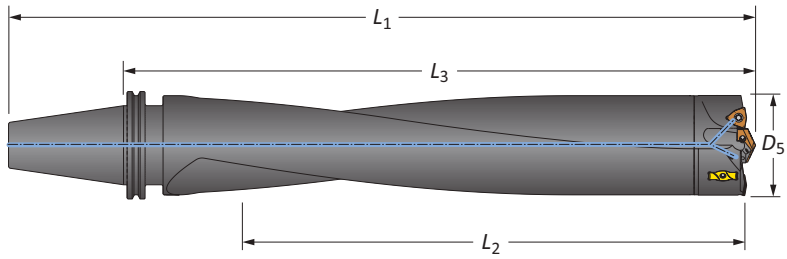

CV50 Shank

	Length	D_5 inch	D_5 mm	Body L_2	Body L_3	Body L_1	Shank	Part No.
i	3xD	3.740 - 4.000	95.00 - 101.60	11-7/8	15-43/64	19-43/64	CV50	**W9503H-CV50**
i	5xD	3.740 - 4.000	95.00 - 101.60	20	23-43/64	27-43/64	CV50	**W9505H-CV50**
i	8xD	3.740 - 4.000	95.00 - 101.60	26-5/8	30-9/32	34-9/32	CV50	⚠ **W9508H-CV50**
i	10xD	3.740 - 4.000	95.00 - 101.60	36-5/64	39-9/64	43-1/4	CV50	⚠ **W9510H-CV50**

Connection Accessories

Mounting Screw	Mounting Screw Bit	Admissible Tightening Torque*
78027-IP30-1	8IP-30B	250 in-lb (2825 N-cm)

*Tightening torques are calculated with a friction coefficient of μ = 0.14 and develop 90% of ultimate yield strength.

⚠ **WARNING** Refer to Speed and Feed charts for recommended adjustments to speeds and feeds. Refer to page A50: 30 for deep hole drilling guidelines in this section of the catalog. Visit **www.alliedmachine.com/DeepHoleGuidelines** for the most up-to-date information and procedures. Factory technical assistance is available for your specific applications through our Application Engineering Team.
ext: **7611** | *email:* **appeng@alliedmachine.com**

i = Imperial (in)
m = Metric (mm)
Mounting screws sold in multiples of 4.

Recommended Drilling Data | Imperial (inch)

ISO	Material	Hardness (BHN)	Outboard Insert Series Speed (SFM)	Outboard Insert Series Pilot Style	Feed Rate (IPR) by Diameter: 5/16" IC, 33, 1.299" - 1.495"	3/8" IC, 38 - 44, 1.496" - 1.885"	1/2" IC, 44 - 51, 1.886" - 2.210"	9/16" IC, 51 - 57 - 63, 2.211" - 2.755"	3/8" IC, 70, 2.756" - 2.992"	1/2" IC, 76 - 83, 2.992" - 3.503"	9/16" IC, 89 - 95, 3.504" - 4.000"
P	**Free-Machining Steel** 1118, 1215, 12L14, etc.	100 - 250	450 - 750	T-A/GEN3SYS	.006 - .011	.007 - .012	.009 - .012	.009 - .012	.006 - .010	.007 - .011	.007 - .012
P	**Low-Carbon Steel** 1010, 1020, 1025, 1522, 1144, etc.	85 - 275	450 - 750	T-A/GEN3SYS	.006 - .011	.007 - .012	.009 - .012	.009 - .012	.006 - .010	.007 - .011	.007 - .012
P	**Medium-Carbon Steel** 1030, 1040, 1050, 1527, 1140, 1151, etc.	125 - 325	450 - 750	T-A/GEN3SYS	.006 - .011	.007 - .012	.009 - .012	.009 - .012	.006 - .010	.007 - .011	.007 - .012
P	**Alloy Steel** 4140, 5140, 8640, etc.	125 - 375	400 - 700	T-A/GEN3SYS	.005 - .007	.005 - .009	.007 - .010	.007 - .011	.005 - .009	.006 - .010	.006 - .010
P	**High-Strength Alloy** 4340, 4330V, 300M, etc.	225 - 400	300 - 500	T-A/GEN3SYS	.005 - .006	.005 - .007	.005 - .008	.006 - .009	.005 - .007	.005 - .008	.006 - .008
P	**Structural Steel** A36, A285, A516, etc.	100 - 350	450 - 750	T-A/GEN3SYS	.006 - .008	.007 - .009	.008 - .010	.009 - .011	.005 - .009	.006 - .010	.007 - .010
P	**Tool Steel** H-13, H-21, A-4, 0-2, S-3, etc.	150 - 250	300 - 500	T-A/GEN3SYS	.005 - .006	.005 - .007	.007 - .009	.008 - .010	.005 - .007	.006 - .009	.007 - .010
S	**High-Temp Alloy** Hastelloy B, Inconel 600, etc.	140 - 310	200 - 400	T-A	.004 - .005	.004 - .007	.006 - .009	.007 - .009	.004 - .006	.005 - .007	.005 - .007
S	**Titanium Alloy**	140 - 310	300 - 500	T-A	.005 - .007	.006 - .008	.007 - .009	.008 - .010	.004 - .006	.005 - .007	.005 - .007
S	**Aerospace Alloy** S82	185 - 350	400 - 600	T-A/GEN3SYS	.004 - .006	.005 - .007	.006 - .008	.006 - .008	.004 - .006	.005 - .007	.005 - .007
M	**Stainless Steel 400 Series** 416, 420, etc.	185 - 350	300 - 500	T-A/GEN3SYS	.006 - .008	.007 - .009	.008 - .010	.009 - .011	.005 - .007	.007 - .009	.007 - .010
M	**Stainless Steel 300 Series** 304, 316, 17-4PH, etc.	135 - 275	300 - 500	T-A/GEN3SYS	.005 - .007	.006 - .008	.007 - .009	.008 - .010	.004 - .008	.006 - .010	.006 - .010
M	**Super Duplex Stainless Steel**	135 - 275	250 - 450	T-A/GEN3SYS	.004 - .006	.005 - .007	.007 - .009	.007 - .009	.004 - .007	.006 - .009	.007 - .010
H	**Wear Plate** Hardox®, AR400, T-1, etc.	400 - 600	300 - 500	T-A	.003 - .005	.004 - .006	.006 - .008	.007 - .009	.003 -.005	.004 - .006	.004 - .006
H	**Hardened Steel**	300 - 500	300 - 500	T-A	.004 - .005	.005 - .006	.006 - .008	.006 - .008	.003 - .005	.004 - .006	.004 - .006
K	**Nodular, Grey, Ductile Cast Iron**	120 - 320	500 - 800	T-A/GEN3SYS	.005 - .009	.006 - .010	.008 - .012	.010 - .012	.008 - .010	.009 - .011	.010 - .012
N	**Cast Aluminum**	30 - 180	600 - 800	T-A/GEN3SYS	.009 - .012	.010 - .014	.012 - .016	.012 - .016	.006 - .009	.008 - .011	.008 - .012
N	**Wrought Aluminum**	30 - 180	600 - 800	T-A/GEN3SYS	.007 - .011	.008 - .012	.010 - .014	.010 - .014	.006 - .009	.008 - .011	.008 - .012
N	**Aluminum Bronze**	100 - 250	400 - 700	T-A/GEN3SYS	.005 - .007	.005 - .008	.007 - .010	.009 - .011	.006 - .009	.007 - .010	.008 - .012
N	**Brass**	30 - 100	800	T-A/GEN3SYS	.006 - .008	.007 - .009	.008 - .010	.009 - .012	.006 - .008	.007 - .009	.008 - .012
N	**Copper**	60	700	T-A/GEN3SYS	.002 - .005	.003 - .006	.006 - .008	.008 - .010	.006 - .008	.006 - .008	.006 - .008

Coolant Recommendations

Series	Pressure (PSI)	Flow Rate (GPM)
33	350	10
38	300	10
44	275	12
51	250	18
57	225	20
63	200	22
70	150	25
76	100	28
83	100	30
89	100	33
95	100	33

Calculations

Value	Formula
SFM	RPM • 0.262 • Diameter
RPM	(SFM • 3.82) / Diameter
IPM	RPM • IPR

IMPORTANT: The speeds and feeds listed above are a general starting point for all applications. Refer to the Coolant Recommendation charts for coolant requirements to run at the recommended speeds and feeds. Factory technical assistance is also available through our Application Engineering Team. *ext:* **7611** | *email:* **appeng@alliedmachine.com**

IMPORTANT: The coolant pressure and flow rate recommendations above represent a good approximation to obtain optimum tool life and chip evacuation at Allied Machine recommended speeds and feeds. If lower coolant capabilities exist in a drilling application, the APX Drilling System will still function at reduced penetration rates. Contact our Application Engineering department for a more specific recommendation of coolant requirements and/or speeds and feeds.

⚠ WARNING **Tool failure can cause serious injury. To prevent:** For APX holders 8xD or longer, do not rotate tool more than 50 RPM unless it is engaged with workpiece or fixture. Refer to page A50: 30 for Deep Hole Drilling Guidelines in this section of the catalog. Visit **www.alliedmachine.com/DeepHoleGuidelines** for the most up-to-date information and procedures. Factory technical assistance is also available for your specific applications.

Recommended Drilling Data | Metric (mm)

ISO	Material	Hardness (BHN)	Outboard Insert Series: Speed (m/min)	Outboard Insert Series: Pilot Style	Feed Rate (mm/rev) by Diameter: 5/16" IC, Series 33, 33.00 mm - 37.99 mm	3/8" IC, Series 38 - 44, 38.00 mm - 47.88 mm	1/2" IC, Series 44 - 51, 47.89 mm - 56.13 mm	9/16" IC, Series 51 - 57 - 63, 56.14 mm - 69.99 mm	3/8" IC, Series 70, 70.00 mm - 75.99 mm	1/2" IC, Series 76 - 83, 76.00 mm - 88.99 mm	9/16" IC, Series 89 - 95, 89.00 mm - 101.60 mm
P	**Free-Machining Steel** 1118, 1215, 12L14, etc.	100 - 250	137 - 229	T-A/GEN3SYS	0.15 - 0.28	0.18 - 0.30	0.23 - 0.30	0.23 - 0.30	0.15 - 0.25	0.18 - 0.28	0.18 - 0.30
P	**Low-Carbon Steel** 1010, 1020, 1025, 1522, 1144, etc.	85 - 275	137 - 229	T-A/GEN3SYS	0.15 - 0.28	0.18 - 0.30	0.23 - 0.30	0.23 - 0.30	0.15 - 0.25	0.18 - 0.28	0.18 - 0.30
P	**Medium-Carbon Steel** 1030, 1040, 1050, 1527, 1140, 1151, etc.	125 - 325	137 - 229	T-A/GEN3SYS	0.15 - 0.28	0.18 - 0.30	0.23 - 0.30	0.23 - 0.30	0.15 - 0.25	0.18 - 0.28	0.18 - 0.30
P	**Alloy Steel** 4140, 5140, 8640, etc.	125 - 375	122 - 213	T-A/GEN3SYS	0.13 - 0.18	0.13 - 0.23	0.18 - 0.25	0.18 - 0.28	0.13 - 0.23	0.15 - 0.25	0.15 - 0.25
P	**High-Strength Alloy** 4340, 4330V, 300M, etc.	225 - 400	91 - 152	T-A/GEN3SYS	0.13 - 0.15	0.13 - 0.18	0.13 - 0.20	0.15 - 0.23	0.13 - 0.18	0.13 - 0.20	0.15 - 0.20
P	**Structural Steel** A36, A285, A516, etc.	100 - 350	137 - 229	T-A/GEN3SYS	0.15 - 0.20	0.18 - 0.23	0.20 - 0.25	0.23 - 0.28	0.13 - 0.23	0.15 - 0.25	0.15 - 0.25
P	**Tool Steel** H-13, H-21, A-4, 0-2, S-3, etc.	150 - 250	91 - 152	T-A/GEN3SYS	0.13 - 0.15	0.13 - 0.18	0.18 - 0.23	0.20 - 0.25	0.13 - 0.18	0.15 - 0.23	0.18 - 0.25
S	**High-Temp Alloy** Hastelloy B, Inconel 600, etc.	140 - 310	61 - 122	T-A	0.10 - 0.13	0.10 - 0.18	0.15 - 0.23	0.18 - 0.23	0.10 - 0.15	0.13 - 0.18	0.13 - 0.18
S	**Titanium Alloy**	140 - 310	91 - 152	T-A	0.13 - 0.18	0.15 - 0.20	0.18 - 0.23	0.20 - 0.25	0.10 - 0.15	0.13 - 0.18	0.13 - 0.18
S	**Aerospace Alloy** S82	185 - 350	122 - 183	T-A/GEN3SYS	0.10 - 0.15	0.13 - 0.18	0.15 - 0.20	0.15 - 0.20	0.10 - 0.15	0.13 - 0.18	0.13 - 0.18
M	**Stainless Steel 400 Series** 416, 420, etc.	185 - 350	91 - 152	T-A/GEN3SYS	0.15 - 0.20	0.18 - 0.23	0.20 - 0.25	0.23 - 0.28	0.13 - 0.18	0.18 - 0.23	0.18 - 0.25
M	**Stainless Steel 300 Series** 304, 316, 17-4PH, etc.	135 - 275	91 - 152	T-A/GEN3SYS	0.13 - 0.18	0.15 - 0.20	0.18 - 0.23	0.20 - 0.25	0.10 - 0.20	0.15 - 0.25	0.15 - 0.25
M	**Super Duplex Stainless Steel**	135 - 275	76 - 137	T-A/GEN3SYS	0.10 - 0.15	0.13 - 0.18	0.18 - 0.23	0.18 - 0.23	0.10 - 0.18	0.15 - 0.23	0.18 - 0.25
H	**Wear Plate** Hardox®, AR400, T-1, etc.	400 - 600	91 - 152	T-A	0.07 - 0.13	0.10 - 0.15	0.15 - 0.20	0.18 - 0.23	0.08 - 0.13	0.10 - 0.15	0.10 - 0.15
H	**Hardened Steel**	300 - 500	91 - 152	T-A	0.10 - 0.13	0.13 - 0.15	0.15 - 0.20	0.15 - 0.20	0.08 - 0.13	0.10 - 0.20	0.10 - 0.20
K	**Nodular, Grey, Ductile Cast Iron**	120 - 320	152 - 244	T-A/GEN3SYS	0.13 - 0.23	0.15 - 0.25	0.20 - 0.30	0.25 - 0.30	0.20 - 0.25	0.23 - 0.28	0.25 - 0.30
N	**Cast Aluminum**	30 - 180	183 - 244	T-A/GEN3SYS	0.23 - 0.30	0.25 - 0.36	0.30 - 0.40	0.30 - 0.40	0.15 - 0.23	0.20 - 0.28	0.20 - 0.30
N	**Wrought Aluminum**	30 - 180	183 - 244	T-A/GEN3SYS	0.18 - 0.28	0.20 - 0.30	0.25 - 0.36	0.25 - 0.36	0.15 - 0.23	0.20 - 0.28	0.20 - 0.30
N	**Aluminum Bronze**	100 - 250	123 - 213	T-A/GEN3SYS	0.13 - 0.18	0.13 - 0.20	0.18 - 0.25	0.23 - 0.28	0.15 - 0.23	0.18 - 0.25	0.20 - 0.30
N	**Brass**	30 - 100	244	T-A/GEN3SYS	0.15 - 0.20	0.18 - 0.23	0.20 - 0.25	0.23 - 0.30	0.15 - 0.20	0.18 - 0.23	0.20 - 0.25
N	**Copper**	60	213	T-A/GEN3SYS	0.05 - 0.13	0.08 - 0.15	0.15 - 0.20	0.20 - 0.25	0.08 - 0.15	0.15 - 0.20	0.15 - 0.20

Coolant Recommendations

Series	Pressure (BAR)	Flow Rate (LPM)
33	24	38
38	21	38
44	19	45
51	17	68
57	16	76
63	14	83
70	10	95
76	7	106
83	7	114
89	7	125
95	7	125

Calculations

Value	Formula
m/min	RPM • 0.003 • Diameter
RPM	(m/min • 318.47) / Diameter
mm/min	RPM • mm/rev

IMPORTANT: The speeds and feeds listed above are a general starting point for all applications. Refer to the Coolant Recommendation charts for coolant requirements to run at the recommended speeds and feeds. Factory technical assistance is also available through our Application Engineering Team. *ext:* **7611** | *email:* **appeng@alliedmachine.com**

IMPORTANT: The coolant pressure and flow rate recommendations above represent a good approximation to obtain optimum tool life and chip evacuation at Allied Machine recommended speeds and feeds. If lower coolant capabilities exist in a drilling application, the APX Drilling System will still function at reduced penetration rates. Contact our Application Engineering department for a more specific recommendation of coolant requirements and/or speeds and feeds.

⚠ WARNING **Tool failure can cause serious injury. To prevent:** For APX holders 8xD or longer, do not rotate tool more than 50 RPM unless it is engaged with workpiece or fixture. Refer to page A50: 30 for Deep Hole Drilling Guidelines in this section of the catalog. Visit **www.alliedmachine.com/DeepHoleGuidelines** for the most up-to-date information and procedures. Factory technical assistance is also available for your specific applications.

Deep Hole Drilling Guidelines

1. Approach
50 RPM max
12 IPM (300 mm/min)

Feed the longer drill within 1/16" (1.5 mm) short of the workpiece at a **maximum of 50 RPM** and 12 IPM (300 mm/min) feed rate.

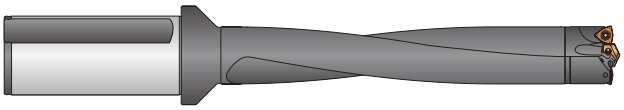

Coolant OFF

2. Feed-in
Speed at 75% of recommended start
Feed at 50% of recommended start

Drill 3/4" deep at 75% recommended speed and 50% recommended feed to establish the hole.

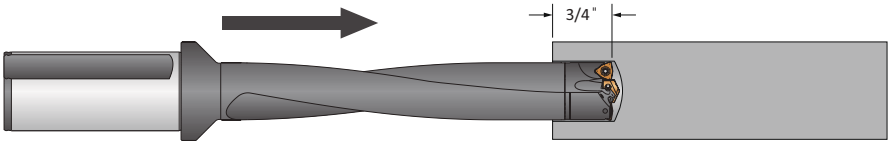

Coolant ON

3. Deep Hole Drilling - Blind
100 % RPM
100% IPR (mm/rev)

Drill to full depth at recommended speed and feed for longer drills (according to Allied Machine speed and feed charts).
***No peck cycle recommended.**

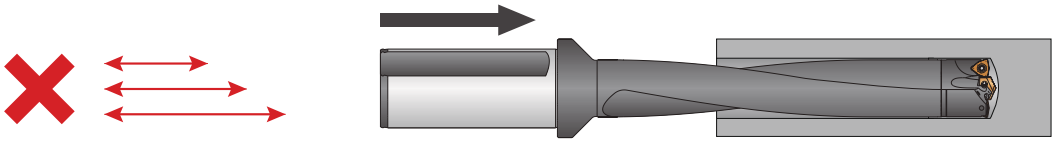

Coolant ON

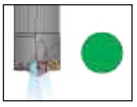

4. Deep Hole Drilling - at Breakout
50% RPM
100% IPR (mm/rev)

***For through holes only:**
Reduce speed by 50% prior to breakout.
Do not break out more than 1/8" (3 mm) past the full diameter of the drill.

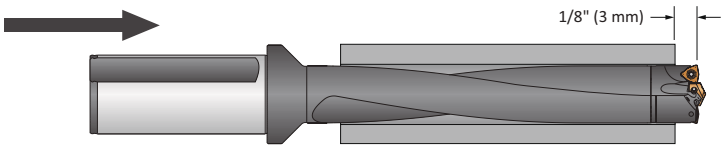

Coolant ON

5. Drill Retract
50 RPM max

Reduce speed to a **maximum of 50 RPM** before retracting from the hole.

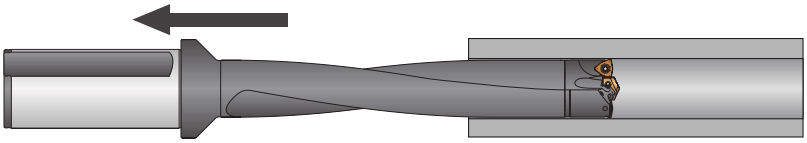

Coolant OFF

WARNING **Tool failure can cause serious injury. To prevent:** NEVER rotate these tool holders more than 50 RPM without proper engagement with a workpiece or fixture. Failure to do so could result in tool failure and/or personal injury. Visit **www.alliedmachine.com/DeepHoleGuidelines** for the most up-to-date information and procedures. Factory technical assistance is also available for your specific applications.
ext: **7611** | *email:* **appeng@alliedmachine.com**

Notes

SECTION

A55

4TEX® Drill

4TEX® Drill

Indexable Carbide Insert Drilling System

- **Diameter Range:** 0.472" - 1.850" (12.00 mm - 47.00 mm)

Don’t Let Your Machine Slow You Down

The 4TEX indexable carbide drill provides increased penetration rates on light duty machines due to the single effective design. With twisted coolant outlets and increased core strength, the design provides improved hole size and finish.

The four-sided 4TEX inserts are designed to use two sides in the center pocket and two sides in the periphery pocket for an improved cost per hole. With insert geometries available for all ISO material classes and a robust body design, the 4TEX is suited for your difficult applications.

Improved hole size and finish.	Superior chip evacuation.	Increased penetration rates.

Applicable Industries

Aerospace · Agriculture · Automotive · Firearms · General Machining · Oil & Gas · Renewable Energy

Your safety and the safety of others is very important. This catalog contains important safety messages. Always read and follow all safety precautions.

This triangle is a safety hazard symbol. It alerts you to potential safety hazards that can cause tool failure and serious injury.

When you see this symbol in the catalog, look for a related safety message that may be near this triangle or referred to in the nearby text.

There are safety signal words also used in the catalog. Safety messages follow these words.

WARNING

WARNING (shown above) means that failure to follow the precautions in this message could result in tool failure and serious injury.

NOTICE means that failure to follow the precautions in this message could result in damage to the tool or machine but not result in personal injury.

NOTE and **IMPORTANT** are also used. These are important that you read and follow but are not safety-related.

Visit www.alliedmachine.com for the most up-to-date information and procedures.

Reference Icons
The following icons will appear throughout the catalog to help you navigate between products.

Setup / Assembly Information
Detailed instructions and information regarding the corresponding part(s)

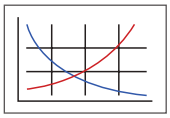

Recommended Cutting Data
Speed and feed recommendations for optimum and safe drilling

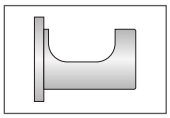

Eccentric Sleeves
Refers to the corresponding eccentric sleeve for the holder

Coolant-Through Option
Indicates that the product is coolant through

Series	Diameter Range	
	Imperial (inch)	Metric (mm)
03	0.472 - 0.531	12.00 - 13.49
04	0.532 - 0.610	13.50 - 15.49
05	0.611 - 0.728	15.50 - 18.49
06	0.728 - 0.866	18.50 - 21.99
07	0.867 - 1.043	22.00 - 26.49
09	1.044 - 1.259	26.50 - 31.99
11	1.260 - 1.535	32.00 - 38.99
14	1.536 - 1.850	39.00 - 47.00

4TEX Drill Contents

Introduction Information

Safety Information 2
Case Study 3
Product Overview 4
Insert Information . . . . . 5 - 6
Product Nomenclature 7

Drill Series

03 Series . . . . . 8 - 9
04 Series . . . . . 10 - 11
05 Series . . . . . 12 - 13
06 Series . . . . . 14 - 15
07 Series . . . . . 16 - 17
09 Series . . . . . 18 - 21
11 Series . . . . . 22 - 25
14 Series . . . . . 26 - 29

Eccentric Sleeves 30

Technical Information

Diameter Adjustment 31
Center Height Alignment . . . . . 32 - 33

Recommended Cutting Data

Imperial (inch) 34
Metric (mm) 35

Insert Geometry Recommendations 36

Troubleshooting Guide 37

Safety Information

Mechanical / Physical Hazards

Operating cutting tools may present both mechanical and physical hazards. These hazards can result in serious injury to workers or those near machines and damage to machines and the cutting tools. Cutting tools and/or assemblies may break or come loose when in operation causing projectile metal fragments. Metal chips produced by cutting tools have sharp edges and may be very hot. To minimize the risk of mechanical or physical hazards:

- Always secure all components of the cutting tool assembly before operating.
- Wear cut-resistant gloves when handling cutting tool components and assemblies.
- Do not touch metal chips produced by the cutting tools with your hands.
- Always wear appropriate personal protective equipment including safety goggles or glasses with side shields.
- Immediately discontinue use of damaged cutting tools.
- To avoid machine tool damage, make sure the machine has adequate power and torque for the cutting tool when operating. See catalog for power and torque requirements.
- Operating long cutting tools at high spindle speeds can result in a high risk of tool failure and serious injury.

Dust and Fume Hazards

Grinding, welding, cutting or burning hard metals such as high-speed steel, cobalt or carbides produces hazardous dust and/or fumes. Continued long-term exposure to hazardous dust and fumes can cause serious health issues. To minimize the risk of dust and fume hazards:

- Do not regrind or sharpen cutting tools without using adequate ventilation.
- Use appropriate personal protective equipment such as approved respirator to avoid inhalation, swallowing, or skin contact with the hazardous dust and/or fumes.
- Do not eat, drink, or smoke in the machine operation area. Always wash skin prior to eating, drinking, or smoking to avoid hazardous ingestion.

Sensitizing Hazards

Components of an assembled cutting tool are made from a variety of metal elements that may cause allergic skin reactions with prolonged skin contact. To minimize the risk of allergic skin reactions:

- Avoid skin contact with cutting tools.
- Wear appropriate gloves and protective clothing.
- Wash skin and launder clothing after handling cutting tools to reduce the risk of skin allergies.

Preventive Safety Measure Applicable to all Hazards

- Prior to using cutting tools, always read Allied Machine's Safety Data Sheets, product catalog, and product labels for additional warnings for the Allied Machine product being used.
- For machining safety, only operate equipment when all necessary guards, interlocks and other safety devices are in place and functional. Use all appropriate safety guards or machine encapsulations to securely collect particles such as chips or cutting elements that may become projectiles.

Through Hole

- With through holes, a **sharp-edged disk** is created as tool breakout occurs.
  - ⚠ Proper personal protective equipment must be used to prevent injury (e.g. wear cut-resistant gloves).

Case Study

Do you need performance in extreme machining conditions?

Tooling is only a sliver of the pie when it comes to productivity. It doesn't matter what your tooling is capable of if your machine conditions restrict those capabilities. Our customer, who drills holes for machine gun bolt switches, utilizes a machine with oil coolant that creates more extreme drilling conditions than water-based coolant.

Because oil coolant doesn't dissipate heat fast enough, the customer's tooling only lasted for 160 holes per insert, and the tool experienced sporadic failure. They also needed to run a peck cycle for chip control.

The customer decided to test the **4TEX indexable carbide drill** using the "P" geometry with AM480 coating designed specifically for wear resistance in steel material applications. The 4TEX "P" geometry allowed for the speed and feed to be altered and accommodated the machine's oil coolant. The 4TEX penetration rate was able to decrease cycle time and also double the tool life to 320 holes per insert. The 4TEX geometry also improved chip formation and eliminated the peck cycle.

The 4TEX provided the stable and repeatable process the customer was looking for while increasing tool life by 100%. With all their objectives met, the customer was thrilled with the solution that optimized their machine's limitations. ***Are you using the solution that best optimizes your machine's limitations?***

Product:	4TEX® Drill
Objectives:	(1) Exceed 160 holes per insert (2) Eliminate peck cycle (3) Provide stable/repeatable process
Industry:	Firearms
Part:	Machine gun bolt switch hole
Material:	4340 steel
Hole Ø:	0.937" *(23.7998 mm)*
Hole Depth:	0.590" *(14.986 mm)*

Measure	Competitor IC Drill	4TEX Drill
RPM	2075	1223
Speed Rate	509 SFM *(155.1432 m/min)*	300 SFM *(91.44 m/min)*
Feed Rate	0.0015 IPR *(0.0381 mm/rev)*	0.003 IPR *(0.0762 mm/rev)*
Penetration Rate	3.11 IPM *(78.994 mm/min)*	3.67 IPM *(93.219 mm/min)*
Peck Cycle	Yes	No
Cycle Time	16 sec	9 sec
Tool Life	160 holes per insert	320 holes per insert

- 4TEX Drill holder
  2xD length
  Item No. D2070937I-100F
- 4TEX Drill inserts
  P geometry (steel)
  Item No. 4T-070305-P

100% tool life increase

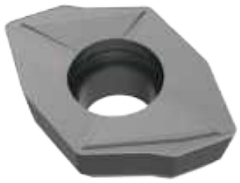

The 4-sided indexable inserts with wear-resistant coating provided:

- ✓ Increased tool life
- ✓ Decreased cycle time
- ✓ Worry-free machining

© Allied Machine & Engineering CS2302

Product Overview

4TEX Drill ***Advantages***

- ***Superior chip evacuation***
  provided by the two twisted coolant holes
- ***Improved hole size***
  from the increased holder rigidity
- ***Longer tool life***
  provided by the four-sided insert design
- ***Optimal chip formation***
  with ISO-specific insert geometry/coating combinations
- ***Competitive cycle times***
  due to single effective cutting when using light duty machines

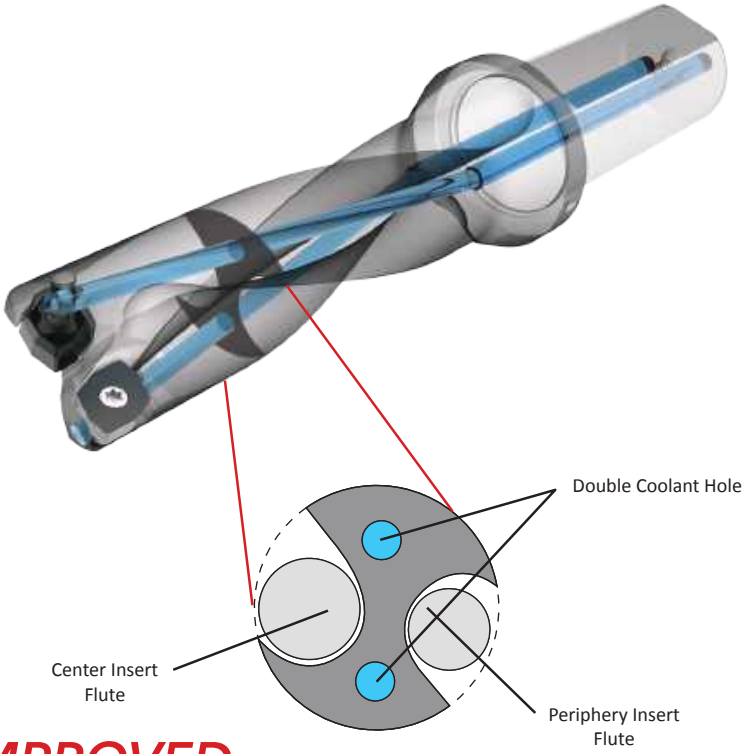

DESIGNED TO GIVE YOU IMPROVED HOLE SIZE AND STRAIGHTNESS

- The two twisted coolant holes allow the core to remain intact, making the core thicker and stronger for improved hole straightness even in uneven surfaces.
- The enlarged dual coolant outlets increase the coolant volume, which improved the chip evacuation resulting in improved hole size.
- The flute space of the internal cutting edge side (where chips get stuck most often) is 1.6x larger than typical IC drills, helping to mitigate catastrophic failures and improve hole size.

LONGER TOOL LIFE

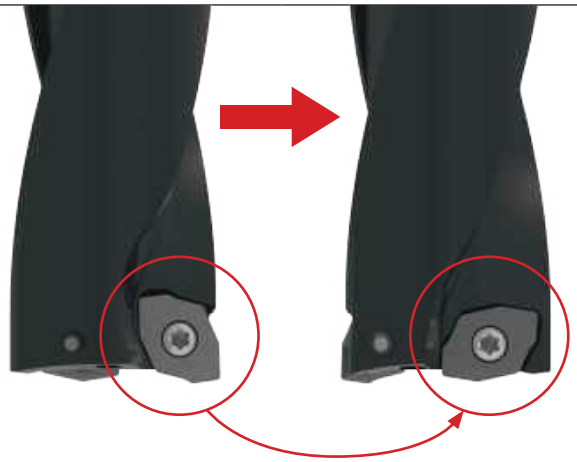

The 4 Edge Advantage

When the cutting edge on the periphery insert wears down, it can be rotated and moved to the center insert position.

AVAILABLE *LENGTHS*

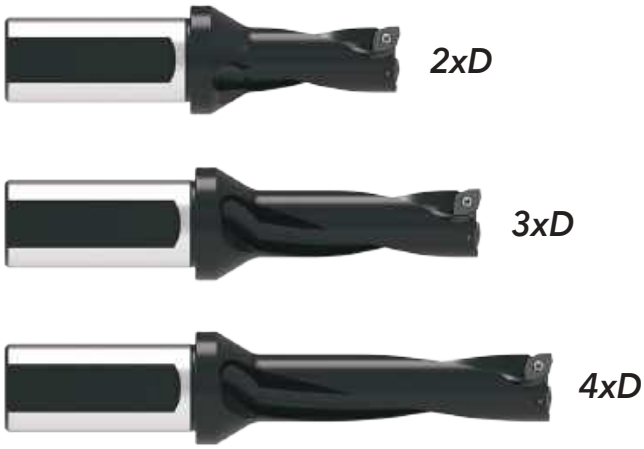

Insert Information

4 CUTTING EDGES

- Each insert has two inner cutting edges and two outer cutting edges.
- Economical solution that increases tool life because of the rotation ability of the inserts.
- Available in ISO material-specific geometry/coating combinations.

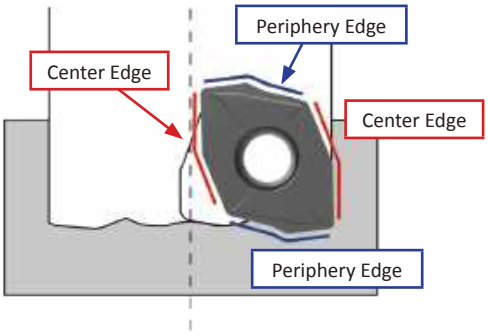

Periphery Insert

180°

Center Insert

Periphery edge chip formation:

Center edge chip formation:

ISO Material	Geometry	Coating	Description
P	General Rake	AM480	A general purpose geometry that provides excellent chip formation in most steels including free-machining, medium- and high-carbon steels. A P30 carbide substrate for improved toughness and AM480 coating, a proprietary wear resistant multilayer PVD coating to improve tool life.
S M	High Rake	AM485	A higher rake geometry that provides excellent chip formation in both stainless steels and high-temperature alloys. A tough M25 carbide substrate coated with AM485, a high heat resistance proprietary multilayer PVD coating.
H	Low Rake	AM480	A lower rake geometry to improve edge strength in both hardened tool steels and high-strength alloys. With a P30 carbide substrate for improved toughness and coated with AM480, a proprietary multilayer PVD coating to improve resistance against tool wear.
K	General Rake	AM480	With a general purpose geometry, the K inserts can be used in grey cast irons as well as ductile irons. A high wear-resistant K10 carbide substrate to improve tool life and coated with AM480, a proprietary multilayer PVD coating to improve resistance against tool wear.
N	High Rake	TiCN	A higher rake cutting geometry provides excellent chip formation in nonferrous materials. An M15/K15 carbide substrate paired with TiCN coating for improved lubricity to resist built-up material, increasing tool life and maintaining chip formation.

Insert Information

Series	Insert Prefix	Dimension (mm) L_1	L_2	T	D_1	R	Angle A_1	A_2	Shape
03	**4T-030203C-x**	5.60	4.80	2.30	2.40	0.30	7°	10°	Style 1
	4T-030203P-x	6.38	4.77	2.30	2.40	0.30	7°	10°	Style 2
04	**4T-040203-x**	6.21	5.06	2.60	2.45	0.30	13°	10°	Style 3
05	**4T-05T203-x**	7.26	5.48	2.76	2.55	0.30	13°	7°	
06	**4T-06T204-x**	8.59	6.44	2.89	2.79	0.40	13°	7°	
07	**4T-070305-x**	10.21	8.02	3.24	3.00	0.50	13°	7°	
09	**4T-09T306-x**	12.18	9.55	4.03	3.64	0.60	13°	7°	
11	**4T-11T306-x**	14.50	11.61	4.06	4.62	0.60	13°	7°	
14	**4T-140408-x**	17.99	14.40	4.88	5.76	0.80	13°	7°	

Style 1

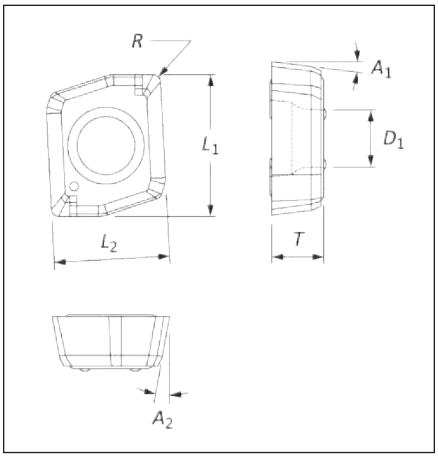

Style 2

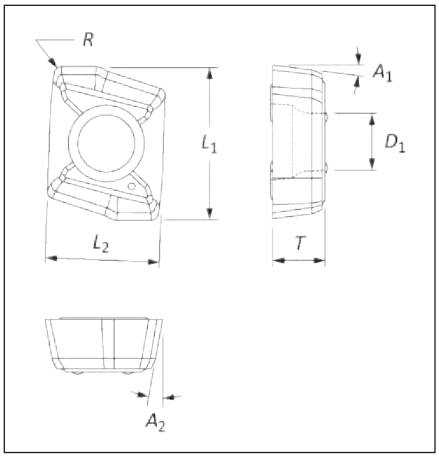

Style 3

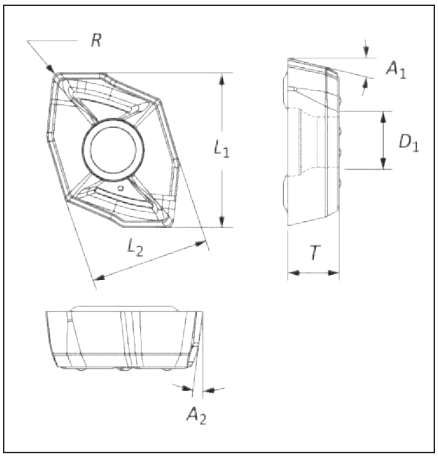

Product Nomenclature

4TEX Drill Holders

D4	03	1200	M	–	075	F
1	2	3*	4		5	6

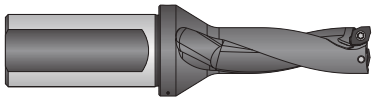

1. Length-to-Diameter-Ratio
D2 = 2xD
D3 = 3xD
D4 = 4xD

2. Series	
03 = 03 series	**07** = 07 series
04 = 04 series	**09** = 09 series
05 = 05 series	**11** = 11 series
06 = 06 series	**14** = 14 series

3. Diameter*
0750 = .075”
1200 = 12 mm

4. Diameter Style
I = Imperial
M = Metric

5. Shank Diameter	
Imperial	**Metric**
075 = 0.75"	**20** = 20 mm
100 = 1.000"	**25** = 25 mm
125 = 1.250"	**32** = 32 mm
150 = 1.500"	**40** = 40 mm

6. Shank Style
F = Imperial flanged shank
FM = Metric flanged shank

***Ordering Nonstocked Diameters:**
Nonstocked diameters are available upon request.
Please refer to price list for applicable process fees.

Ordering example:
Inch: 03 Series (Ø .480") = D2030480I-075F
Metric: 03 Series (12.65 mm) = D2031265M-20FM

Reference Key

Symbol	Attribute
D_1	Drill diameter
D_2	Shank diameter
D_3	Flange diameter
L_1	Assembled overall length
L_2	Drill depth
L_3	Reference length

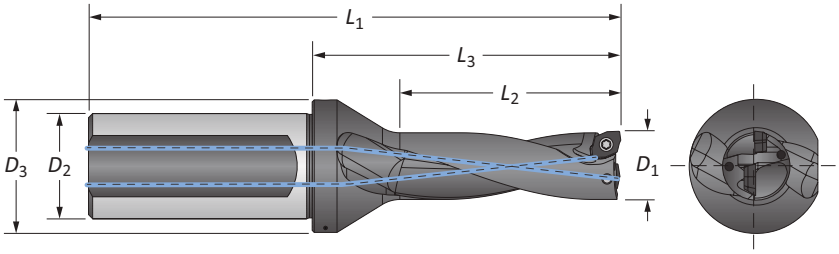

4TEX Drill Holders | Imperial Shank

03 Series | Diameter Range: 0.472" - 0.531" (12.00 mm - 13.49 mm)

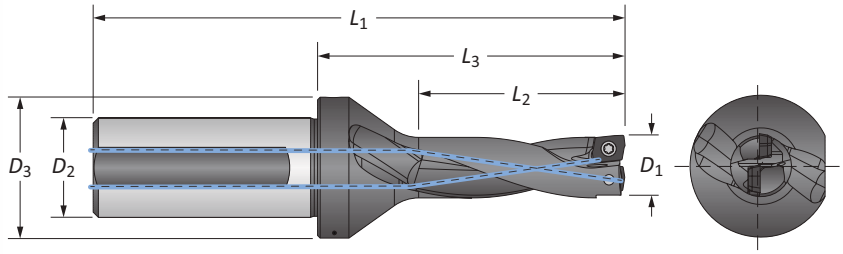

Imperial Shank

Length		D_1 in	D_1 mm	Body L_2	Body L_3	Body L_1	Shank D_2	Shank D_3	Max Offset	Part No.
2xD		0.472	12.00	0.945	1.787	3.480	0.750	1.063	0.020	**D2031200M-075F**
		0.492	12.50	0.984	1.827	3.520	0.750	1.063	0.016	**D2031250M-075F**
		0.500	12.70	1.000	1.827	3.520	0.750	1.063	0.014	**D2030500I-075F**
		0.512	13.00	1.024	1.866	3.559	0.750	1.063	0.012	**D2031300M-075F**
3xD		0.472	12.00	1.417	2.260	3.953	0.750	1.063	0.020	**D3031200M-075F**
		0.492	12.50	1.476	2.319	4.012	0.750	1.063	0.016	**D3031250M-075F**
		0.500	12.70	1.500	2.319	4.012	0.750	1.063	0.014	**D3030500I-075F**
		0.512	13.00	1.535	2.378	4.071	0.750	1.063	0.012	**D3031300M-075F**
4xD		0.472	12.00	1.890	2.732	4.425	0.750	1.063	0.020	**D4031200M-075F**
		0.492	12.50	1.969	2.811	4.504	0.750	1.063	0.016	**D4031250M-075F**
		0.500	12.70	2.000	2.811	4.504	0.750	1.063	0.014	**D4030500I-075F**
		0.512	13.00	2.047	2.890	4.583	0.750	1.063	0.012	**D4031300M-075F**

IC Inserts

ISO Material	Style	Part No.	Insert Screw	Torx® Driver	Admissible Tightening Torque
P	Center	**4T-030203C-P**	7241-T6-1	8T-6	4.4 in-lbs (0.5 N-m)
	Periphery	**4T-030203P-P**			
S M	Center	**4T-030203C-M**			
	Periphery	**4T-030203P-M**			
H	Center	**4T-030203C-H**			
	Periphery	**4T-030203P-H**			
K	Center	**4T-030203C-K**			
	Periphery	**4T-030203P-K**			
N	Center	**4T-030203C-N**			
	Periphery	**4T-030203P-N**			

Expected Hole Tolerances

Length	in	mm
2xD	-.004 / +.008	-.10 / +.20
3xD	-.004 / +.008	-.10 / +.20
4xD	-.004 / +.010	-.10 / +.25

A55: 34 - 35 A55: 31 - 33 A55: 30
Key on A55: 1

ⓘ = Imperial (in)
ⓜ = Metric (mm)
IC inserts sold in quantities of 10
Insert screws sold in quantities of 10

4TEX Drill Holders | Metric Shank

03 Series | Diameter Range: 0.472" - 0.531" (12.00 mm - 13.49 mm)

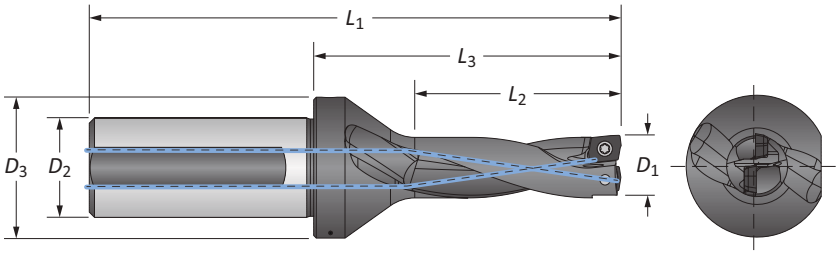

Metric Shank

	Length	D_1 in	D_1 mm	Body L_2	Body L_3	Body L_1	Shank D_2	Shank D_3	Max Offset	Part No.
m	2xD	0.472	12.00	24.00	45.40	88.40	20.00	27.00	0.50	**D2031200M-20FM**
		0.492	12.50	25.00	46.40	89.40	20.00	27.00	0.40	**D2031250M-20FM**
		0.500	12.70	25.40	46.40	89.40	20.00	27.00	0.35	**D2030500I-20FM**
		0.512	13.00	26.00	47.40	90.40	20.00	27.00	0.30	**D2031300M-20FM**
	3xD	0.472	12.00	36.00	57.40	100.40	20.00	27.00	0.50	**D3031200M-20FM**
		0.492	12.50	37.50	58.90	101.90	20.00	27.00	0.40	**D3031250M-20FM**
		0.500	12.70	38.10	58.90	101.90	20.00	27.00	0.35	**D3030500I-20FM**
		0.512	13.00	39.00	60.40	103.40	20.00	27.00	0.30	**D3031300M-20FM**
	4xD	0.472	12.00	48.00	69.40	112.40	20.00	27.00	0.50	**D4031200M-20FM**
		0.492	12.50	50.00	71.40	114.40	20.00	27.00	0.40	**D4031250M-20FM**
		0.500	12.70	50.80	71.40	114.40	20.00	27.00	0.35	**D4030500I-20FM**
		0.512	13.00	52.00	73.40	116.40	20.00	27.00	0.30	**D4031300M-20FM**

IC Inserts

ISO Material	Style	Part No.	Insert Screw	Torx® Driver	Admissible Tightening Torque
P	Center	**4T-030203C-P**	7241-T6-1	8T-6	4.4 in-lbs (0.5 N-m)
	Periphery	**4T-030203P-P**			
S M	Center	**4T-030203C-M**			
	Periphery	**4T-030203P-M**			
H	Center	**4T-030203C-H**			
	Periphery	**4T-030203P-H**			
K	Center	**4T-030203C-K**			
	Periphery	**4T-030203P-K**			
N	Center	**4T-030203C-N**			
	Periphery	**4T-030203P-N**			

Expected Hole Tolerances

Length	in	mm
2xD	-.004 / +.008	-.10 / +.20
3xD	-.004 / +.008	-.10 / +.20
4xD	-.004 / +.010	-.10 / +.25

A55: 34 - 35
A55: 31 - 33
A55: 30
Key on A55: 1

ⓘ = Imperial (in)
ⓜ = Metric (mm)
IC inserts sold in quantities of 10
Insert screws sold in quantities of 10

4TEX Drill Holders | Imperial Shank

04 Series | Diameter Range: 0.532" - 0.610" (13.50 mm - 15.49 mm)

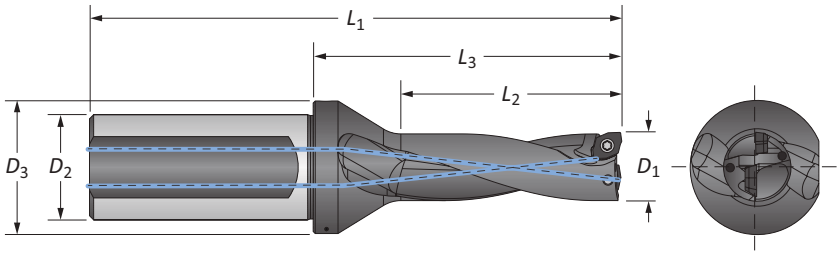

Imperial Shank

Length	D_1 in	D_1 mm	Body L_2	Body L_3	Body L_1	Shank D_2	Shank D_3	Max Offset	Part No.
2xD	0.531	13.50	1.063	1.906	3.598	0.750	1.063	0.020	**D2041350M-075F**
	0.551	14.00	1.102	1.945	3.638	0.750	1.063	0.016	**D2041400M-075F**
	0.563	14.29	1.124	1.945	3.638	0.750	1.063	0.013	**D2040562I-075F**
	0.571	14.50	1.142	1.984	3.677	0.750	1.063	0.012	**D2041450M-075F**
	0.591	15.00	1.181	2.024	3.717	0.750	1.063	0.008	**D2041500M-075F**
3xD	0.531	13.50	1.594	2.437	4.130	0.750	1.063	0.020	**D3041350M-075F**
	0.551	14.00	1.654	2.496	4.189	0.750	1.063	0.016	**D3041400M-075F**
	0.563	14.29	1.686	2.496	4.189	0.750	1.063	0.013	**D3040562I-075F**
	0.571	14.50	1.713	2.555	4.248	0.750	1.063	0.012	**D3041450M-075F**
	0.591	15.00	1.772	2.614	4.307	0.750	1.063	0.008	**D3041500M-075F**
4xD	0.531	13.50	2.126	2.969	4.661	0.750	1.063	0.020	**D4041350M-075F**
	0.551	14.00	2.205	3.047	4.740	0.750	1.063	0.016	**D4041400M-075F**
	0.563	14.29	2.248	3.047	4.740	0.750	1.063	0.013	**D4040562I-075F**
	0.571	14.50	2.283	3.126	4.819	0.750	1.063	0.012	**D4041450M-075F**
	0.591	15.00	2.362	3.205	4.898	0.750	1.063	0.008	**D4041500M-075F**

IC Inserts

ISO Material	Part No.	Insert Screw	Torx® Driver	Admissible Tightening Torque
P	**4T-040203-P**	7241-T6-1	8T-6	4.4 in-lbs (0.5 N-m)
S M	**4T-040203-M**			
H	**4T-040203-H**			
K	**4T-040203-K**			
N	**4T-040203-N**			

Expected Hole Tolerances

Length	in	mm
2xD	-.004 / +.008	-.10 / +.20
3xD	-.004 / +.008	-.10 / +.20
4xD	-.004 / +.010	-.10 / +.25

A55: 34 - 35
Key on A55: 1
A55: 31 - 33
A55: 30

ⓘ = Imperial (in)
ⓜ = Metric (mm)
IC inserts sold in quantities of 10
Insert screws sold in quantities of 10

4TEX Drill Holders | Metric Shank

04 Series | Diameter Range: 0.532" - 0.610" (13.50 mm - 15.49 mm)

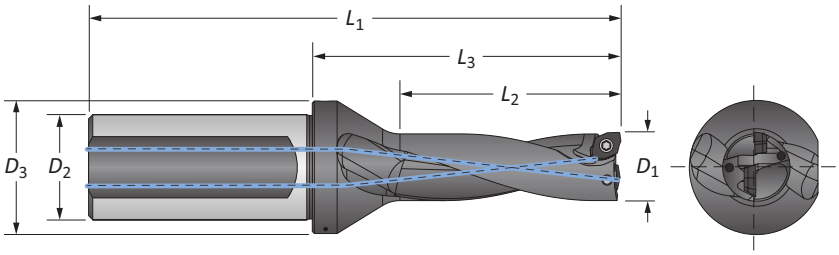

Metric Shank

	Length	D_1 in	D_1 mm	Body L_2	Body L_3	Body L_1	Shank D_2	Shank D_3	Max Offset	Part No.
m	2xD	0.531	13.50	27.00	48.40	91.40	20.00	27.00	0.50	**D2041350M-20FM**
		0.551	14.00	28.00	49.40	92.40	20.00	27.00	0.40	**D2041400M-20FM**
		0.563	14.29	28.55	49.40	92.40	20.00	27.00	0.30	**D2040562I-20FM**
		0.571	14.50	29.00	50.40	93.40	20.00	27.00	0.30	**D2041450M-20FM**
		0.591	15.00	30.00	51.40	94.40	20.00	27.00	0.20	**D2041500M-20FM**
	3xD	0.531	13.50	40.50	61.90	104.90	20.00	27.00	0.50	**D3041350M-20FM**
		0.551	14.00	42.00	63.40	106.40	20.00	27.00	0.40	**D3041400M-20FM**
		0.563	14.29	42.82	63.40	106.40	20.00	27.00	0.30	**D3040562I-20FM**
		0.571	14.50	43.50	64.90	107.90	20.00	27.00	0.30	**D3041450M-20FM**
		0.591	15.00	45.00	66.40	109.40	20.00	27.00	0.20	**D3041500M-20FM**
	4xD	0.531	13.50	54.00	75.40	118.40	20.00	27.00	0.50	**D4041350M-20FM**
		0.551	14.00	56.00	77.40	120.40	20.00	27.00	0.40	**D4041400M-20FM**
		0.563	14.29	57.10	77.40	120.40	20.00	27.00	0.30	**D4040562I-20FM**
		0.571	14.50	58.00	79.40	122.40	20.00	27.00	0.30	**D4041450M-20FM**
		0.591	15.00	60.00	81.40	124.40	20.00	27.00	0.20	**D4041500M-20FM**

IC Inserts

ISO Material	Part No.	Insert Screw	Torx® Driver	Admissible Tightening Torque
P	**4T-040203-P**	7241-T6-1	8T-6	4.4 in-lbs (0.5 N-m)
S M	**4T-040203-M**			
H	**4T-040203-H**			
K	**4T-040203-K**			
N	**4T-040203-N**			

Expected Hole Tolerances

Length	in	mm
2xD	-.004 / +.008	-.10 / +.20
3xD	-.004 / +.008	-.10 / +.20
4xD	-.004 / +.010	-.10 / +.25

A55: 34 - 35
A55: 31 - 33
A55: 30
Key on A55: 1

ⓘ = Imperial (in)
ⓜ = Metric (mm)
IC inserts sold in quantities of 10
Insert screws sold in quantities of 10

4TEX Drill Holders | Imperial Shank

05 Series | Diameter Range: 0.611" - 0.728" (15.50 mm - 18.49 mm)

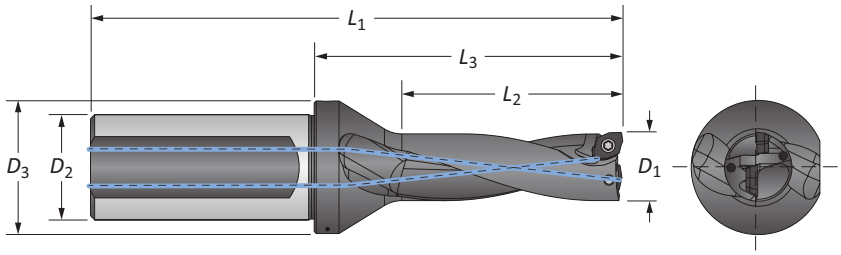

Imperial Shank

Length		D_1 in	D_1 mm	Body L_2	Body L_3	Body L_1	Shank D_2	Shank D_3	Max Offset	Part No.
	2xD	0.610	15.50	1.220	2.146	4.272	1.000	1.260	0.031	D2051550M-100F
		0.625	15.88	1.250	2.146	4.272	1.000	1.260	0.029	D2050625I-100F
		0.630	16.00	1.260	2.185	4.311	1.000	1.260	0.028	D2051600M-100F
		0.650	16.50	1.299	2.224	4.350	1.000	1.260	0.020	D2051650M-100F
		0.656	16.66	1.312	2.224	4.350	1.000	1.260	0.016	D2050656I-100F
		0.669	17.00	1.339	2.264	4.390	1.000	1.260	0.016	D2051700M-100F
		0.687	17.46	1.374	2.264	4.390	1.000	1.260	0.012	D2050687I-100F
		0.689	17.50	1.378	2.303	4.429	1.000	1.260	0.012	D2051750M-100F
		0.709	18.00	1.417	2.343	4.469	1.000	1.260	0.008	D2051800M-100F
		0.718	18.24	1.436	2.343	4.469	1.000	1.260	0.006	D2050718I-100F
	3xD	0.610	15.50	1.831	2.756	4.882	1.000	1.260	0.031	D3051550M-100F
		0.625	15.88	1.875	2.756	4.882	1.000	1.260	0.029	D3050625I-100F
		0.630	16.00	1.890	2.815	4.941	1.000	1.260	0.028	D3051600M-100F
		0.650	16.50	1.949	2.874	5.000	1.000	1.260	0.020	D3051650M-100F
		0.656	16.66	1.968	2.784	5.000	1.000	1.260	0.016	D3050656I-100F
		0.669	17.00	2.008	2.933	5.059	1.000	1.260	0.016	D3051700M-100F
		0.687	17.46	2.061	2.933	5.059	1.000	1.260	0.012	D3050687I-100F
		0.689	17.50	2.067	2.992	5.118	1.000	1.260	0.012	D3051750M-100F
		0.709	18.00	2.126	3.051	5.177	1.000	1.260	0.008	D3051800M-100F
		0.718	18.24	2.154	3.051	5.177	1.000	1.260	0.006	D3050718I-100F
	4xD	0.610	15.50	2.441	3.366	5.492	1.000	1.260	0.031	D4051550M-100F
		0.625	15.88	2.500	3.366	5.492	1.000	1.260	0.029	D4050625I-100F
		0.630	16.00	2.520	3.445	5.571	1.000	1.260	0.028	D4051600M-100F
		0.650	16.50	2.598	3.524	5.650	1.000	1.260	0.020	D4051650M-100F
		0.656	16.66	2.624	3.524	5.650	1.000	1.260	0.016	D4050656I-100F
		0.669	17.00	2.677	3.602	5.728	1.000	1.260	0.016	D4051700M-100F
		0.687	17.46	2.748	3.602	5.728	1.000	1.260	0.012	D4050687I-100F
		0.689	17.50	2.756	3.681	5.807	1.000	1.260	0.012	D4051750M-100F
		0.709	18.00	2.835	3.760	5.886	1.000	1.260	0.008	D4051800M-100F
		0.718	18.24	2.872	3.760	5.886	1.000	1.260	0.006	D4050718I-100F

IC Inserts

ISO Material	Part No.	Insert Screw	Torx® Driver	Admissible Tightening Torque
P	4T-05T203-P	7243-T6-1	8T-6	4.4 in-lbs (0.5 N-m)
S M	4T-05T203-M			
H	4T-05T203-H			
K	4T-05T203-K			
N	4T-05T203-N			

Expected Hole Tolerances

Length	in	mm
2xD	-.004 / +.008	-.10 / +.20
3xD	-.004 / +.008	-.10 / +.20
4xD	-.004 / +.010	-.10 / +.25

A55: 34 - 35
Key on A55: 1
A55: 31 - 33
A55: 30

ⓘ = Imperial (in)
ⓜ = Metric (mm)
IC inserts sold in quantities of 10
Insert screws sold in quantities of 10

4TEX Drill Holders | Metric Shank

05 Series | Diameter Range: 0.611" - 0.728" (15.50 mm - 18.49 mm)

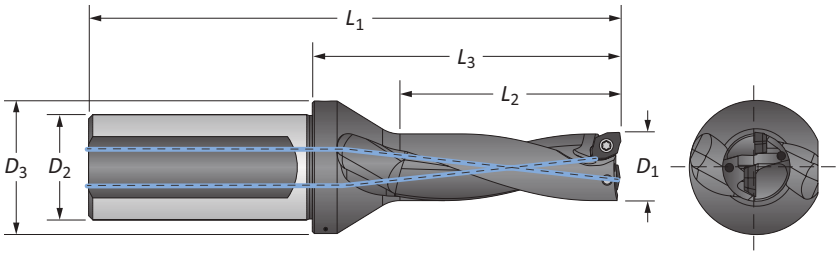

Metric Shank

	Length	D_1 in	D_1 mm	Body L_2	Body L_3	Body L_1	Shank D_2	Shank D_3	Max Offset	Part No.
m	2xD	0.610	15.50	31.00	54.50	108.50	25.00	32.00	0.80	**D2051550M-25FM**
		0.625	15.88	31.75	54.50	108.50	25.00	32.00	0.70	**D2050625I-25FM**
		0.630	16.00	32.00	55.50	109.50	25.00	32.00	0.70	**D2051600M-25FM**
		0.650	16.50	33.00	56.50	110.50	25.00	32.00	0.50	**D2051650M-25FM**
		0.656	16.66	33.32	56.49	110.50	25.00	32.00	0.40	**D2050656I-25FM**
		0.669	17.00	34.00	57.50	111.50	25.00	32.00	0.40	**D2051700M-25FM**
		0.687	17.46	34.90	57.50	111.50	25.00	32.00	0.30	**D2050687I-25FM**
		0.689	17.50	35.00	58.50	112.50	25.00	32.00	0.30	**D2051750M-25FM**
		0.709	18.00	36.00	59.50	113.50	25.00	32.00	0.20	**D2051800M-25FM**
		0.718	18.24	36.47	59.51	113.51	25.00	32.00	0.15	**D2050718I-25FM**
	3xD	0.610	15.50	46.50	70.00	124.00	25.00	32.00	0.80	**D3051550M-25FM**
		0.625	15.88	47.63	70.00	124.00	25.00	32.00	0.70	**D3050625I-25FM**
		0.630	16.00	48.00	71.50	125.50	25.00	32.00	0.70	**D3051600M-25FM**
		0.650	16.50	49.50	73.00	127.00	25.00	32.00	0.50	**D3051650M-25FM**
		0.656	16.66	49.98	73.00	127.00	25.00	32.00	0.40	**D3050656I-25FM**
		0.669	17.00	51.00	74.50	128.50	25.00	32.00	0.40	**D3051700M-25FM**
		0.687	17.46	52.35	74.50	128.50	25.00	32.00	0.30	**D3050687I-25FM**
		0.689	17.50	52.50	76.00	130.00	25.00	32.00	0.30	**D3051750M-25FM**
		0.709	18.00	54.00	77.50	131.50	25.00	32.00	0.20	**D3051800M-25FM**
		0.718	18.24	54.71	77.50	131.50	58.00	32.00	0.15	**D3050718I-25FM**
	4xD	0.610	15.50	62.00	85.50	139.50	25.00	32.00	0.80	**D4051550M-25FM**
		0.625	15.88	63.50	85.50	139.50	25.00	32.00	0.70	**D4050625I-25FM**
		0.630	16.00	64.00	87.50	141.50	25.00	32.00	0.70	**D4051600M-25FM**
		0.650	16.50	66.00	89.50	143.50	25.00	32.00	0.50	**D4051650M-25FM**
		0.656	16.66	66.64	89.51	143.51	25.00	32.00	0.40	**D4050656I-25FM**
		0.669	17.00	68.00	91.50	145.50	25.00	32.00	0.40	**D4051700M-25FM**
		0.687	17.46	69.80	91.50	145.50	25.00	32.00	0.30	**D4050687I-25FM**
		0.689	17.50	70.00	93.50	147.50	25.00	32.00	0.30	**D4051750M-25FM**
		0.709	18.00	72.00	95.50	149.50	25.00	32.00	0.20	**D4051800M-25FM**
		0.718	18.24	72.95	95.50	149.50	25.00	32.00	0.15	**D4050718I-25FM**

IC Inserts

ISO Material	Part No.	Insert Screw	Torx® Driver	Admissible Tightening Torque
P	**4T-05T203-P**	7243-T6-1	8T-6	4.4 in-lbs (0.5 N-m)
S M	**4T-05T203-M**			
H	**4T-05T203-H**			
K	**4T-05T203-K**			
N	**4T-05T203-N**			

Expected Hole Tolerances

Length	in	mm
2xD	-.004 / +.008	-.10 / +.20
3xD	-.004 / +.008	-.10 / +.20
4xD	-.004 / +.010	-.10 / +.25

A55: 34 - 35
Key on A55: 1
A55: 31 - 33
A55: 30

ⓘ = Imperial (in)
ⓜ = Metric (mm)
IC inserts sold in quantities of 10
Insert screws sold in quantities of 10

4TEX Drill Holders | Imperial Shank

06 Series | Diameter Range: 0.728" - 0.866" (18.50 mm - 21.99 mm)

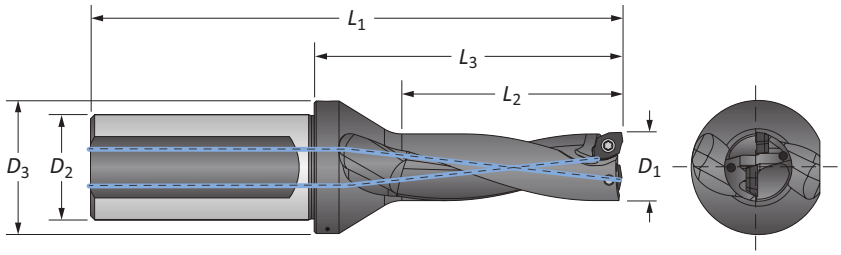

Imperial Shank

Length		D_1 in	D_1 mm	Body L_2	Body L_3	Body L_1	Shank D_2	Shank D_3	Max Offset	Part No.
	2xD	0.728	18.50	1.457	2.299	4.425	1.000	1.260	0.035	**D2061850M-100F**
		0.748	19.00	1.496	2.339	4.465	1.000	1.260	0.031	**D2061900M-100F**
		0.750	19.05	1.500	2.339	4.465	1.000	1.260	0.031	**D2060750I-100F**
		0.765	19.43	1.530	2.339	4.465	1.000	1.260	0.028	**D2060765I-100F**
		0.768	19.50	1.535	2.378	4.504	1.000	1.260	0.028	**D2061950M-100F**
		0.787	20.00	1.575	2.417	4.543	1.000	1.260	0.020	**D2062000M-100F**
		0.807	20.50	1.614	2.457	4.583	1.000	1.260	0.016	**D2062050M-100F**
		0.813	20.64	1.624	2.457	4.583	1.000	1.260	0.015	**D2060812I-100F**
		0.827	21.00	1.654	2.496	4.622	1.000	1.260	0.012	**D2062100M-100F**
		0.846	21.50	1.693	2.535	4.661	1.000	1.260	0.008	**D2062150M-100F**
	3xD	0.728	18.50	2.165	3.028	5.154	1.000	1.260	0.035	**D3061850M-100F**
		0.748	19.00	2.244	3.087	5.213	1.000	1.260	0.031	**D3061900M-100F**
		0.750	19.05	2.250	3.087	5.213	1.000	1.260	0.031	**D3060750I-100F**
		0.765	19.43	2.295	3.087	5.213	1.000	1.260	0.028	**D3060765I-100F**
ⓘ		0.768	19.50	2.303	3.146	5.272	1.000	1.260	0.028	**D3061950M-100F**
		0.787	20.00	2.362	3.205	5.331	1.000	1.260	0.020	**D3062000M-100F**
		0.807	20.50	2.421	3.264	5.390	1.000	1.260	0.016	**D3062050M-100F**
		0.813	20.64	2.436	3.264	5.390	1.000	1.260	0.015	**D3060812I-100F**
		0.827	21.00	2.480	3.323	5.449	1.000	1.260	0.012	**D3062100M-100F**
		0.846	21.50	2.539	3.382	5.508	1.000	1.260	0.008	**D3062150M-100F**
	4xD	0.728	18.50	2.913	3.756	5.882	1.000	1.260	0.035	**D4061850M-100F**
		0.748	19.00	2.992	3.835	5.961	1.000	1.260	0.031	**D4061900M-100F**
		0.750	19.05	3.000	3.835	5.961	1.000	1.260	0.031	**D4060750I-100F**
		0.765	19.43	3.060	3.835	5.961	1.000	1.260	0.028	**D4060765I-100F**
		0.768	19.50	3.071	3.913	6.039	1.000	1.260	0.028	**D4061950M-100F**
		0.787	20.00	3.150	3.992	6.118	1.000	1.260	0.020	**D4062000M-100F**
		0.807	20.50	3.228	4.071	6.197	1.000	1.260	0.016	**D4062050M-100F**
		0.813	20.64	3.248	4.071	6.197	1.000	1.260	0.015	**D4060812I-100F**
		0.827	21.00	3.307	4.150	6.276	1.000	1.260	0.012	**D4062100M-100F**
		0.846	21.50	3.386	4.228	6.354	1.000	1.260	0.008	**D4062150M-100F**

IC Inserts

ISO Material	Part No.	Insert Screw	Torx® Driver	Admissible Tightening Torque
P	**4T-06T204-P**	72251-T7-1	8T-7	7.1 in-lbs (0.8 N-m)
S M	**4T-06T204-M**			
H	**4T-06T204-H**			
K	**4T-06T204-K**			
N	**4T-06T204-N**			

Expected Hole Tolerances

Length	in	mm
2xD	-.004 / +.008	-.10 / +.20
3xD	-.004 / +.008	-.10 / +.20
4xD	-.004 / +.010	-.10 / +.25

A55: 34 - 35
Key on A55: 1
A55: 31 - 33
A55: 30

ⓘ = Imperial (in)
ⓜ = Metric (mm)
IC inserts sold in quantities of 10
Insert screws sold in quantities of 10

4TEX Drill Holders | Metric Shank

06 Series | Diameter Range: 0.728" - 0.866" (18.50 mm - 21.99 mm)

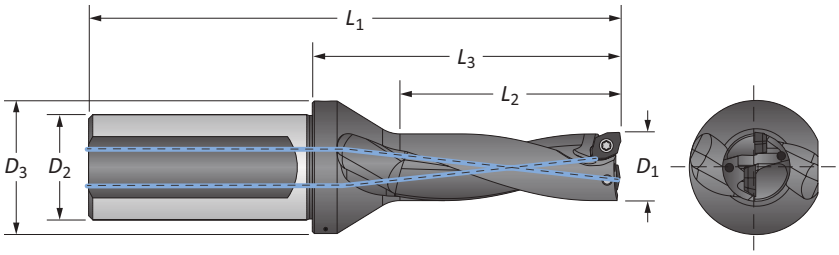

Metric Shank

	Length	D_1 in	D_1 mm	Body L_2	Body L_3	Body L_1	Shank D_2	Shank D_3	Max Offset	Part No.
m	2xD	0.728	18.50	37.00	58.40	112.40	25.00	32.00	0.90	**D2061850M-25FM**
		0.748	19.00	38.00	59.40	113.40	25.00	32.00	0.80	**D2061900M-25FM**
		0.750	19.05	38.10	59.40	113.40	25.00	32.00	0.80	**D2060750I-25FM**
		0.765	19.43	38.86	59.41	113.41	25.00	32.00	0.70	**D2060765I-25FM**
		0.768	19.50	39.00	60.40	114.40	25.00	32.00	0.70	**D2061950M-25FM**
		0.787	20.00	40.00	61.40	115.40	25.00	32.00	0.50	**D2062000M-25FM**
		0.807	20.50	41.00	62.40	116.40	25.00	32.00	0.40	**D2062050M-25FM**
		0.813	20.64	41.25	62.40	116.40	25.00	32.00	0.40	**D2060812I-25FM**
		0.827	21.00	42.00	63.40	117.40	25.00	32.00	0.30	**D2062100M-25FM**
		0.846	21.50	43.00	64.40	118.40	25.00	32.00	0.20	**D2062150M-25FM**
	3xD	0.728	18.50	55.00	76.90	130.90	25.00	32.00	0.90	**D3061850M-25FM**
		0.748	19.00	57.00	78.40	132.40	25.00	32.00	0.80	**D3061900M-25FM**
		0.750	19.05	57.15	78.40	132.40	25.00	32.00	0.80	**D3060750I-25FM**
		0.765	19.43	58.29	78.41	132.41	25.00	32.00	0.70	**D3060765I-25FM**
		0.768	19.50	58.50	79.90	133.90	25.00	32.00	0.70	**D3061950M-25FM**
		0.787	20.00	60.00	81.40	135.40	25.00	32.00	0.50	**D3062000M-25FM**
		0.807	20.50	61.50	82.90	136.90	25.00	32.00	0.40	**D3062050M-25FM**
		0.813	20.64	61.87	82.90	136.90	25.00	32.00	0.40	**D3060812I-25FM**
		0.827	21.00	63.00	84.40	138.40	25.00	32.00	0.30	**D3062100M-25FM**
		0.846	21.50	64.50	85.90	139.90	25.00	32.00	0.20	**D3062150M-25FM**
	4xD	0.728	18.50	74.00	95.40	149.40	25.00	32.00	0.90	**D4061850M-25FM**
		0.748	19.00	76.00	97.40	151.40	25.00	32.00	0.80	**D4061900M-25FM**
		0.750	19.05	76.20	97.40	151.40	25.00	32.00	0.80	**D4060750I-25FM**
		0.765	19.43	77.72	97.41	151.41	25.00	32.00	0.70	**D4060765I-25FM**
		0.768	19.50	78.00	99.40	153.40	25.00	32.00	0.70	**D4061950M-25FM**
		0.787	20.00	80.00	101.40	155.40	25.00	32.00	0.50	**D4062000M-25FM**
		0.807	20.50	82.00	103.40	157.40	25.00	32.00	0.40	**D4062050M-25FM**
		0.813	20.64	82.49	103.40	157.40	25.00	32.00	0.40	**D4060812I-25FM**
		0.827	21.00	84.00	105.40	159.40	25.00	32.00	0.30	**D4062100M-25FM**
		0.846	21.50	86.00	107.40	161.40	25.00	32.00	0.20	**D4062150M-25FM**

IC Inserts

ISO Material	Part No.	Insert Screw	Torx® Driver	Admissible Tightening Torque
P	**4T-06T204-P**	72251-T7-1	8T-7	7.1 in-lbs (0.8 N-m)
S M	**4T-06T204-M**			
H	**4T-06T204-H**			
K	**4T-06T204-K**			
N	**4T-06T204-N**			

Expected Hole Tolerances

Length	in	mm
2xD	-.004 / +.008	-.10 / +.20
3xD	-.004 / +.008	-.10 / +.20
4xD	-.004 / +.010	-.10 / +.25

A55: 34 - 35
Key on A55: 1
A55: 31 - 33
A55: 30

ⓘ = Imperial (in)
ⓜ = Metric (mm)
IC inserts sold in quantities of 10
Insert screws sold in quantities of 10

4TEX Drill Holders | Imperial Shank

07 Series | Diameter Range: 0.867" - 1.043" (22.00 mm - 26.49 mm)

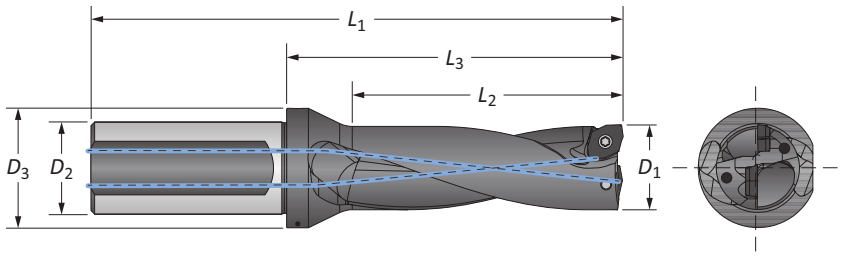

Imperial Shank

Length	D_1 in	D_1 mm	Body L_2	Body L_3	Body L_1	Shank D_2	Shank D_3	Max Offset	Part No.
2xD	0.866	22.00	1.732	2.555	4.681	1.000	1.299	0.047	D2072200M-100F
	0.875	22.22	1.750	2.555	4.681	1.000	1.299	0.043	D2070875I-100F
	0.886	22.50	1.772	2.594	4.720	1.000	1.299	0.039	D2072250M-100F
	0.906	23.00	1.811	2.634	4.760	1.000	1.299	0.035	D2072300M-100F
	0.925	23.50	1.850	2.673	4.799	1.000	1.299	0.031	D2072350M-100F
	0.937	23.81	1.874	2.673	4.799	1.000	1.299	0.292	D2070937I-100F
	0.945	24.00	1.890	2.713	4.839	1.000	1.299	0.028	D2072400M-100F
	0.965	24.50	1.929	2.752	4.878	1.000	1.299	0.020	D2072450M-100F
	0.984	25.00	1.969	2.791	4.917	1.000	1.299	0.016	D2072500M-100F
	1.000	25.40	2.000	2.791	4.917	1.000	1.299	0.013	D2071000I-100F
	1.004	25.50	2.008	2.831	4.957	1.000	1.299	0.012	D2072550M-100F
	1.024	26.00	2.047	2.870	4.996	1.000	1.299	0.008	D2072600M-100F
3xD	0.866	22.00	2.598	3.421	5.547	1.000	1.299	0.047	D3072200M-100F
	0.875	22.22	2.625	3.421	5.547	1.000	1.299	0.043	D3070875I-100F
	0.886	22.50	2.657	3.480	5.606	1.000	1.299	0.039	D3072250M-100F
	0.906	23.00	2.717	3.539	5.665	1.000	1.299	0.035	D3072300M-100F
	0.925	23.50	2.776	3.598	5.724	1.000	1.299	0.031	D3072350M-100F
	0.937	23.81	2.811	3.598	5.724	1.000	1.299	0.292	D3070937I-100F
	0.945	24.00	2.835	3.657	5.783	1.000	1.299	0.028	D3072400M-100F
	0.965	24.50	2.894	3.717	5.843	1.000	1.299	0.020	D3072450M-100F
	0.984	25.00	2.953	3.776	5.902	1.000	1.299	0.016	D3072500M-100F
	1.000	25.40	3.000	3.776	5.902	1.000	1.299	0.013	D3071000I-100F
	1.004	25.50	3.012	3.835	5.961	1.000	1.299	0.012	D3072550M-100F
	1.024	26.00	3.071	3.894	6.020	1.000	1.299	0.008	D3072600M-100F
4xD	0.866	22.00	3.465	4.287	6.413	1.000	1.299	0.047	D4072200M-100F
	0.875	22.22	3.500	4.287	6.413	1.000	1.299	0.043	D4070875I-100F
	0.886	22.50	3.543	4.366	6.492	1.000	1.299	0.039	D4072250M-100F
	0.906	23.00	3.622	4.445	6.571	1.000	1.299	0.035	D4072300M-100F
	0.925	23.50	3.701	4.524	6.650	1.000	1.299	0.031	D4072350M-100F
	0.937	23.81	3.748	4.524	6.650	1.000	1.299	0.292	D4070937I-100F
	0.945	24.00	3.780	4.602	6.728	1.000	1.299	0.028	D4072400M-100F
	0.965	24.50	3.858	4.681	6.807	1.000	1.299	0.020	D4072450M-100F
	0.984	25.00	3.937	4.760	6.886	1.000	1.299	0.016	D4072500M-100F
	1.000	25.40	4.000	4.760	6.886	1.000	1.299	0.013	D4071000I-100F
	1.004	25.50	4.016	4.839	6.965	1.000	1.299	0.012	D4072550M-100F
	1.024	26.00	4.094	4.917	7.043	1.000	1.299	0.008	D4072600M-100F

IC Inserts

ISO Material	Part No.	Insert Screw	Torx® Driver	Admissible Tightening Torque
P	4T-070305-P	72568-T8-1	8T-8	10.6 in-lbs (1.2 N-m)
S M	4T-070305-M			
H	4T-070305-H			
K	4T-070305-K			
N	4T-070305-N			

Expected Hole Tolerances

Length	in	mm
2xD	-.004 / +.008	-.10 / +.20
3xD	-.004 / +.008	-.10 / +.20
4xD	-.004 / +.010	-.10 / +.25

A55: 34 - 35
Key on A55: 1
A55: 31 - 33
A55: 30

ⓘ = Imperial (in)
ⓜ = Metric (mm)
IC inserts sold in quantities of 10
Insert screws sold in quantities of 10

4TEX Drill Holders | Metric Shank

07 Series | Diameter Range: 0.867" - 1.043" (22.00 mm - 26.49 mm)

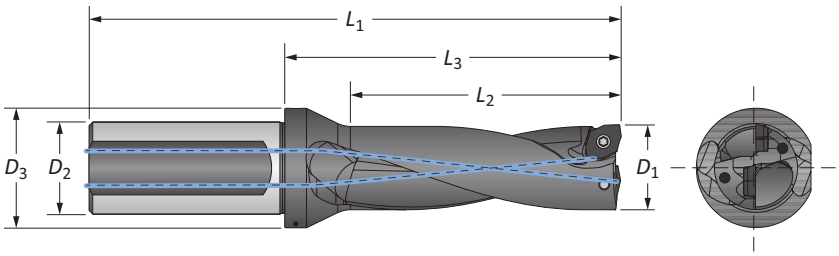

Metric Shank

	Length	D_1 in	D_1 mm	Body L_2	Body L_3	Body L_1	Shank D_2	Shank D_3	Max Offset	Part No.
m	2xD	0.866	22.00	44.00	64.90	118.90	25.00	33.00	1.20	D2072200M-25FM
		0.875	22.22	44.45	64.90	118.90	25.00	33.00	1.10	D2070875I-25FM
		0.886	22.50	45.00	65.90	119.90	25.00	33.00	1.00	D2072250M-25FM
		0.906	23.00	46.00	66.90	120.90	25.00	33.00	0.90	D2072300M-25FM
		0.925	23.50	47.00	67.90	121.90	25.00	33.00	0.80	D2072350M-25FM
		0.937	23.81	47.60	67.90	121.90	25.00	33.00	7.40	D2070937I-25FM
		0.945	24.00	48.00	68.90	122.90	25.00	33.00	0.70	D2072400M-25FM
		0.965	24.50	49.00	69.90	123.90	25.00	33.00	0.50	D2072450M-25FM
		0.984	25.00	50.00	70.90	124.90	25.00	33.00	0.40	D2072500M-25FM
		1.000	25.40	50.80	70.90	124.90	25.00	33.00	0.30	D2071000I-25FM
		1.004	25.50	51.00	71.90	125.90	25.00	33.00	0.30	D2072550M-25FM
		1.024	26.00	52.00	72.90	126.90	25.00	33.00	0.20	D2072600M-25FM
	3xD	0.866	22.00	66.00	86.90	140.90	25.00	33.00	1.20	D3072200M-25FM
		0.875	22.22	66.68	86.90	140.90	25.00	33.00	1.10	D3070875I-25FM
		0.886	22.50	67.50	88.40	142.40	25.00	33.00	1.00	D3072250M-25FM
		0.906	23.00	69.00	89.90	143.90	25.00	33.00	0.90	D3072300M-25FM
		0.925	23.50	70.50	91.40	145.40	25.00	33.00	0.80	D3072350M-25FM
		0.937	23.81	71.40	91.40	145.40	25.00	33.00	7.40	D3070937I-25FM
		0.945	24.00	72.00	92.90	146.90	25.00	33.00	0.70	D3072400M-25FM
		0.965	24.50	73.50	94.40	148.40	25.00	33.00	0.50	D3072450M-25FM
		0.984	25.00	75.00	95.90	149.90	25.00	33.00	0.40	D3072500M-25FM
		1.000	25.40	76.20	95.90	149.90	25.00	33.00	0.30	D3071000I-25FM
		1.004	25.50	76.50	97.00	151.00	25.00	33.00	0.30	D3072550M-25FM
		1.024	26.00	78.00	99.00	153.00	25.00	33.00	0.20	D3072600M-25FM
	4xD	0.866	22.00	88.00	109.00	163.00	25.00	33.00	1.20	D4072200M-25FM
		0.875	22.22	88.90	108.90	162.90	25.00	33.00	1.10	D4070875I-25FM
		0.886	22.50	90.00	111.00	165.00	25.00	33.00	1.00	D4072250M-25FM
		0.906	23.00	92.00	113.00	167.00	25.00	33.00	0.90	D4072300M-25FM
		0.925	23.50	94.00	115.00	169.00	25.00	33.00	0.80	D4072350M-25FM
		0.937	23.81	95.20	114.90	168.90	25.00	33.00	7.40	D4070937I-25FM
		0.945	24.00	96.00	117.00	171.00	25.00	33.00	0.70	D4072400M-25FM
		0.965	24.50	98.00	119.00	173.00	25.00	33.00	0.50	D4072450M-25FM
		0.984	25.00	100.00	121.00	175.00	25.00	33.00	0.40	D4072500M-25FM
		1.000	25.40	101.60	120.90	174.90	25.00	33.00	0.30	D4071000I-25FM
		1.004	25.50	102.00	123.00	177.00	25.00	33.00	0.30	D4072550M-25FM
		1.024	26.00	104.00	125.00	179.00	25.00	33.00	0.20	D4072600M-25FM

IC Inserts

ISO Material	Part No.	Insert Screw	Torx® Driver	Admissible Tightening Torque
P	4T-070305-P	72568-T8-1	8T-8	10.6 in-lbs (1.2 N-m)
S M	4T-070305-M			
H	4T-070305-H			
K	4T-070305-K			
N	4T-070305-N			

Expected Hole Tolerances

Length	in	mm
2xD	-.004 / +.008	-.10 / +.20
3xD	-.004 / +.008	-.10 / +.20
4xD	-.004 / +.010	-.10 / +.25

A55: 34 - 35
A55: 31 - 33
A55: 30
Key on A55: 1

ⓘ = Imperial (in)
ⓜ = Metric (mm)
IC inserts sold in quantities of 10
Insert screws sold in quantities of 10

4TEX Drill Holders | Imperial Shank

09 Series | Diameter Range: 1.044" - 1.259" (26.50 mm - 31.99 mm)

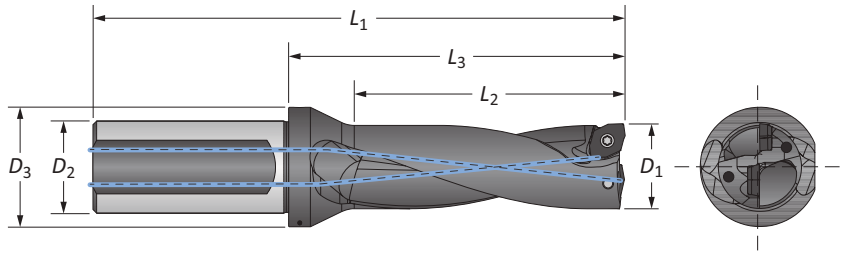

Imperial Shank

Length		D_1 in	D_1 mm	Body L_2	Body L_3	Body L_1	Shank D_2	Shank D_3	Max Offset	Part No.
	2xD	1.043	26.50	2.087	2.980	5.303	1.250	1.614	0.066	D2092650M-125F
		1.063	27.00	2.126	3.020	5.343	1.250	1.614	0.063	D2092700M-125F
		1.083	27.50	2.165	3.059	5.382	1.250	1.614	0.057	D2092750M-125F
		1.102	28.00	2.205	3.098	5.421	1.250	1.614	0.051	D2092800M-125F
		1.122	28.50	2.244	3.138	5.461	1.250	1.614	0.048	D2092850M-125F
		1.125	28.58	2.250	3.138	5.461	1.250	1.614	0.046	D2091125I-125F
		1.142	29.00	2.283	3.177	5.500	1.250	1.614	0.043	D2092900M-125F
		1.161	29.50	2.323	3.217	5.539	1.250	1.693	0.038	D2092950M-125F
		1.181	30.00	2.362	3.256	5.579	1.250	1.693	0.031	D2093000M-125F
		1.187	30.15	2.374	3.256	5.579	1.250	1.693	0.032	D2091187I-125F
		1.201	30.50	2.402	3.295	5.618	1.250	1.693	0.029	D2093050M-125F
		1.220	31.00	2.441	3.335	5.657	1.250	1.693	0.024	D2093100M-125F
		1.240	31.50	2.480	3.374	5.697	1.250	1.693	0.020	D2093150M-125F
		1.250	31.75	2.500	3.374	5.697	1.250	1.693	0.019	D2091250I-125F
	3xD	1.043	26.50	3.130	4.024	6.346	1.250	1.614	0.066	D3092650M-125F
		1.063	27.00	3.189	4.083	6.406	1.250	1.614	0.063	D3092700M-125F
		1.083	27.50	3.248	4.142	6.465	1.250	1.614	0.057	D3092750M-125F
		1.102	28.00	3.307	4.201	6.524	1.250	1.614	0.051	D3092800M-125F
		1.122	28.50	3.366	4.260	6.583	1.250	1.614	0.048	D3092850M-125F
		1.125	28.58	3.375	4.260	6.583	1.250	1.614	0.046	D3091125I-125F
		1.142	29.00	3.425	4.319	6.642	1.250	1.614	0.043	D3092900M-125F
		1.161	29.50	3.484	4.378	6.701	1.250	1.693	0.038	D3092950M-125F
		1.181	30.00	3.543	4.437	6.760	1.250	1.693	0.031	D3093000M-125F
		1.187	30.15	3.561	4.437	6.760	1.250	1.693	0.032	D3091187I-125F
		1.201	30.50	3.602	4.496	6.819	1.250	1.693	0.029	D3093050M-125F
		1.220	31.00	3.661	4.555	6.878	1.250	1.693	0.024	D3093100M-125F
		1.240	31.50	3.720	4.614	6.937	1.250	1.693	0.020	D3093150M-125F
		1.250	31.75	3.750	4.614	6.937	1.250	1.693	0.019	D3091250I-125F

IC Inserts

ISO Material	Part No.	Insert Screw	Torx® Driver	Admissible Tightening Torque
P	4T-09T306-P	738-T10-1	8T-10	17.7 in-lbs (2.0 N-m)
S M	4T-09T306-M			
H	4T-09T306-H			
K	4T-09T306-K			
N	4T-09T306-N			

Expected Hole Tolerances

Length	in	mm
2xD	-.006 / +.010	-.15 / +.25
3xD	-.006 / +.010	-.15 / +.25
4xD	-.006 / +.012	-.15 / +.30

A55: 34 - 35
Key on A55: 1
A55: 31 - 33
A55: 30

ⓘ = Imperial (in)
ⓜ = Metric (mm)
IC inserts sold in quantities of 10
Insert screws sold in quantities of 10

4TEX Drill Holders | Imperial Shank

09 Series | Diameter Range: 1.044" - 1.259" (26.50 mm - 31.99 mm)

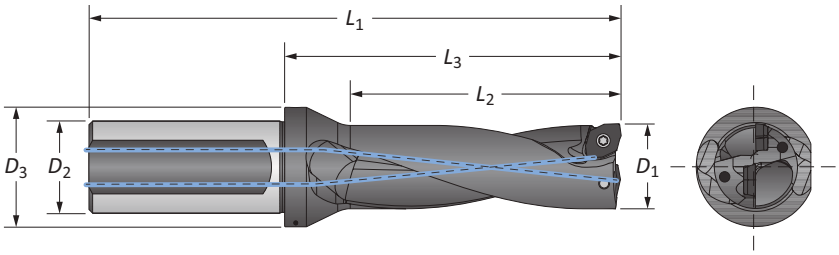

Imperial Shank

	Length	D_1 in	D_1 mm	Body L_2	Body L_3	Body L_1	Shank D_2	Shank D_3	Max Offset	Part No.
i	4xD	1.043	26.50	4.173	5.067	7.390	1.250	1.614	0.066	**D4092650M-125F**
		1.063	27.00	4.252	5.146	7.469	1.250	1.614	0.063	**D4092700M-125F**
		1.083	27.50	4.331	5.224	7.547	1.250	1.614	0.057	**D4092750M-125F**
		1.102	28.00	4.409	5.303	7.626	1.250	1.614	0.051	**D4092800M-125F**
		1.122	28.50	4.488	5.382	7.705	1.250	1.614	0.048	**D4092850M-125F**
		1.125	28.58	4.500	5.382	7.705	1.250	1.614	0.046	**D4091125I-125F**
		1.142	29.00	4.567	5.461	7.783	1.250	1.614	0.043	**D4092900M-125F**
		1.161	29.50	4.646	5.539	7.862	1.250	1.693	0.038	**D4092950M-125F**
		1.181	30.00	4.724	5.618	7.941	1.250	1.693	0.031	**D4093000M-125F**
		1.187	30.15	4.748	5.618	7.941	1.250	1.693	0.032	**D4091187I-125F**
		1.201	30.50	4.803	5.697	8.020	1.250	1.693	0.029	**D4093050M-125F**
		1.220	31.00	4.882	5.776	8.098	1.250	1.693	0.024	**D4093100M-125F**
		1.240	31.50	4.961	5.854	8.177	1.250	1.693	0.020	**D4093150M-125F**
		1.250	31.75	5.000	5.854	8.177	1.250	1.693	0.019	**D4091250I-125F**

IC Inserts

ISO Material	Part No.	Insert Screw	Torx® Driver	Admissible Tightening Torque
P	**4T-09T306-P**	738-T10-1	8T-10	17.7 in-lbs (2.0 N-m)
S M	**4T-09T306-M**			
H	**4T-09T306-H**			
K	**4T-09T306-K**			
N	**4T-09T306-N**			

Expected Hole Tolerances

Length	in	mm
2xD	-.006 / +.010	-.15 / +.25
3xD	-.006 / +.010	-.15 / +.25
4xD	-.006 / +.012	-.15 / +.30

A55: 34 - 35
Key on A55: 1
A55: 31 - 33
A55: 30

i = Imperial (in)
m = Metric (mm)
IC inserts sold in quantities of 10
Insert screws sold in quantities of 10

4TEX Drill Holders | Metric Shank

09 Series | Diameter Range: 1.044" - 1.259" (26.50 mm - 31.99 mm)

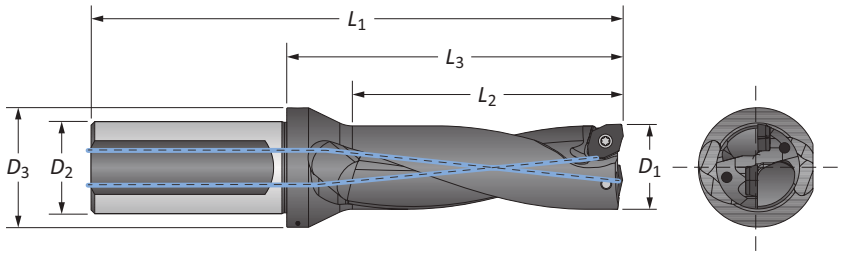

Metric Shank

Length		D_1 in	D_1 mm	Body L_2	Body L_3	Body L_1	Shank D_2	Shank D_3	Max Offset	Part No.
m	2xD	1.043	26.50	53.00	75.70	134.70	32.00	41.00	1.68	D2092650M-32FM
		1.063	27.00	54.00	76.70	135.70	32.00	41.00	1.60	D2092700M-32FM
		1.083	27.50	55.00	77.70	136.70	32.00	41.00	1.45	D2092750M-32FM
		1.102	28.00	56.00	78.70	137.70	32.00	41.00	1.30	D2092800M-32FM
		1.122	28.50	57.00	79.70	138.70	32.00	41.00	1.21	D2092850M-32FM
		1.125	28.58	57.15	79.70	138.70	32.00	41.00	1.20	D2091125I-32FM
		1.142	29.00	58.00	80.70	139.70	32.00	41.00	1.10	D2092900M-32FM
		1.161	29.50	59.00	81.70	140.70	32.00	43.00	0.97	D2092950M-32FM
		1.181	30.00	60.00	82.70	141.70	32.00	43.00	0.80	D2093000M-32FM
		1.187	30.15	60.30	82.70	141.70	32.00	43.00	0.82	D2091187I-32FM
		1.201	30.50	61.00	83.70	142.70	32.00	43.00	0.74	D2093050M-32FM
		1.220	31.00	62.00	84.70	143.70	32.00	43.00	0.60	D2093100M-32FM
		1.240	31.50	63.00	85.70	144.70	32.00	43.00	0.50	D2093150M-32FM
		1.250	31.75	63.50	85.70	144.70	32.00	43.00	0.50	D2091250I-32FM
	3xD	1.043	26.50	79.50	102.20	161.20	32.00	41.00	1.68	D3092650M-32FM
		1.063	27.00	81.00	103.70	162.70	32.00	41.00	1.60	D3092700M-32FM
		1.083	27.50	82.50	105.20	164.20	32.00	41.00	1.45	D3092750M-32FM
		1.102	28.00	84.00	106.70	165.70	32.00	41.00	1.30	D3092800M-32FM
		1.122	28.50	85.50	108.20	167.20	32.00	41.00	1.21	D3092850M-32FM
		1.125	28.58	85.73	108.20	167.20	32.00	41.00	1.20	D3091125I-32FM
		1.142	29.00	87.00	109.70	168.70	32.00	41.00	1.10	D3092900M-32FM
		1.161	29.50	88.50	111.20	170.20	32.00	43.00	0.97	D3092950M-32FM
		1.181	30.00	90.00	112.70	171.70	32.00	43.00	0.80	D3093000M-32FM
		1.187	30.15	90.45	112.70	171.70	32.00	43.00	0.82	D3091187I-32FM
		1.201	30.50	91.50	114.20	173.20	32.00	43.00	0.74	D3093050M-32FM
		1.220	31.00	93.00	115.70	174.70	32.00	43.00	0.60	D3093100M-32FM
		1.240	31.50	94.50	117.00	176.20	32.00	43.00	0.50	D3093150M-32FM
		1.250	31.75	95.25	117.20	176.20	32.00	43.00	0.50	D3091250I-32FM

IC Inserts

ISO Material	Part No.	Insert Screw	Torx® Driver	Admissible Tightening Torque
P	4T-09T306-P	738-T10-1	8T-10	17.7 in-lbs (2.0 N-m)
S M	4T-09T306-M			
H	4T-09T306-H			
K	4T-09T306-K			
N	4T-09T306-N			

Expected Hole Tolerances

Length	in	mm
2xD	-.006 / +.010	-.15 / +.25
3xD	-.006 / +.010	-.15 / +.25
4xD	-.006 / +.012	-.15 / +.30

A55: 34 - 35
Key on A55: 1
A55: 31 - 33
A55: 30

ⓘ = Imperial (in)
ⓜ = Metric (mm)
IC inserts sold in quantities of 10
Insert screws sold in quantities of 10

4TEX Drill Holders | Metric Shank

09 Series | Diameter Range: 1.044" - 1.259" (26.50 mm - 31.99 mm)

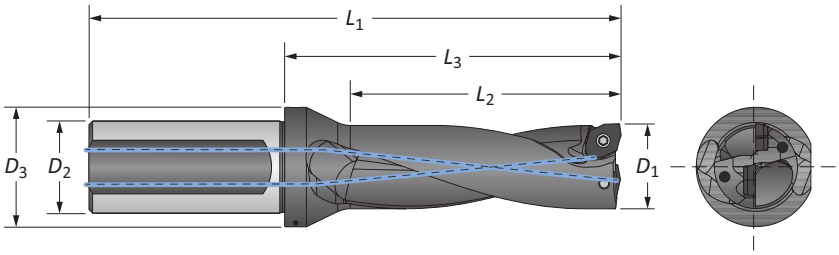

Metric Shank

	Length	D_1 in	D_1 mm	Body L_2	Body L_3	Body L_1	Shank D_2	Shank D_3	Max Offset	Part No.
m	4xD	1.043	26.50	106.00	128.70	187.70	32.00	41.00	1.68	**D4092650M-32FM**
		1.063	27.00	108.00	130.70	189.70	32.00	41.00	1.60	**D4092700M-32FM**
		1.083	27.50	110.00	132.70	191.70	32.00	41.00	1.45	**D4092750M-32FM**
		1.102	28.00	112.00	134.70	193.70	32.00	41.00	1.30	**D4092800M-32FM**
		1.122	28.50	114.00	136.70	195.70	32.00	41.00	1.21	**D4092850M-32FM**
		1.125	28.58	114.30	136.70	195.70	32.00	41.00	1.20	**D4091125I-32FM**
		1.142	29.00	116.00	138.70	197.70	32.00	41.00	1.10	**D4092900M-32FM**
		1.161	29.50	118.00	140.70	199.70	32.00	43.00	0.97	**D4092950M-32FM**
		1.181	30.00	120.00	142.70	201.70	32.00	43.00	0.80	**D4093000M-32FM**
		1.187	30.15	120.60	142.70	201.70	32.00	43.00	0.82	**D4091187I-32FM**
		1.201	30.50	122.00	144.70	203.70	32.00	43.00	0.74	**D4093050M-32FM**
		1.220	31.00	124.00	146.70	205.70	32.00	43.00	0.60	**D4093100M-32FM**
		1.240	31.50	126.00	148.70	207.70	32.00	43.00	0.50	**D4093150M-32FM**
		1.250	31.75	127.00	148.70	207.70	32.00	43.00	0.50	**D4091250I-32FM**

IC Inserts

ISO Material	Part No.	Insert Screw	Torx® Driver	Admissible Tightening Torque
P	**4T-09T306-P**	738-T10-1	8T-10	17.7 in-lbs (2.0 N-m)
S M	**4T-09T306-M**			
H	**4T-09T306-H**			
K	**4T-09T306-K**			
N	**4T-09T306-N**			

Expected Hole Tolerances

Length	in	mm
2xD	-.006 / +.010	-.15 / +.25
3xD	-.006 / +.010	-.15 / +.25
4xD	-.006 / +.012	-.15 / +.30

A55: 34 - 35
Key on A55: 1
A55: 31 - 33
A55: 30

ⓘ = Imperial (in)
ⓜ = Metric (mm)
IC inserts sold in quantities of 10
Insert screws sold in quantities of 10

4TEX Drill Holders | Imperial Shank

11 Series | Diameter Range: 1.260" - 1.535" (32.00 mm - 38.99 mm)

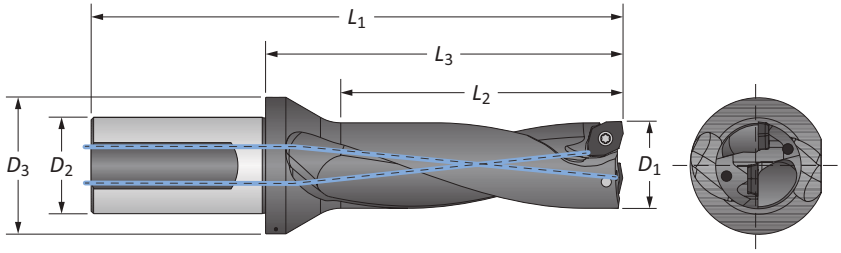

Imperial Shank

Length		D_1 in	D_1 mm	Body L_2	Body L_3	Body L_1	Shank D_2	Shank D_3	Max Offset	Part No.
	2xD	1.260	32.00	2.520	3.953	6.669	1.500	2.126	0.087	**D2113200M-150F**
		1.280	32.50	2.559	3.953	6.669	1.500	2.126	0.081	**D2113250M-150F**
		1.299	33.00	2.598	4.031	6.748	1.500	2.126	0.075	**D2113300M-150F**
		1.312	33.32	2.624	4.031	6.748	1.500	2.126	0.073	**D2111312I-150F**
		1.319	33.50	2.638	4.031	6.748	1.500	2.126	0.071	**D2113350M-150F**
		1.339	34.00	2.677	4.110	6.827	1.500	2.126	0.067	**D2113400M-150F**
		1.358	34.50	2.717	4.110	6.827	1.500	2.126	0.061	**D2113450M-150F**
		1.375	34.92	2.750	4.110	6.827	1.500	2.126	0.056	**D2111375I-150F**
		1.378	35.00	2.756	4.189	6.906	1.500	2.126	0.055	**D2113500M-150F**
		1.398	35.50	2.795	4.189	6.906	1.500	2.126	0.051	**D2113550M-150F**
		1.417	36.00	2.835	4.268	6.984	1.500	2.126	0.047	**D2113600M-150F**
		1.437	36.50	2.874	4.268	6.984	1.500	2.126	0.042	**D2113650M-150F**
		1.457	37.00	2.913	4.346	7.063	1.500	2.126	0.035	**D2113700M-150F**
		1.476	37.50	2.953	4.346	7.063	1.500	2.126	0.032	**D2113750M-150F**
		1.496	38.00	2.992	4.425	7.142	1.500	2.126	0.028	**D2113800M-150F**
		1.500	38.10	3.000	4.425	7.142	1.500	2.126	0.027	**D2111500I-150F**
		1.516	38.50	3.031	4.425	7.142	1.500	2.126	0.022	**D2113850M-150F**
	3xD	1.260	32.00	3.780	5.213	7.929	1.500	2.126	0.087	**D3113200M-150F**
		1.280	32.50	3.839	5.213	7.929	1.500	2.126	0.081	**D3113250M-150F**
		1.299	33.00	3.898	5.331	8.047	1.500	2.126	0.075	**D3113300M-150F**
		1.312	33.32	3.936	5.331	8.047	1.500	2.126	0.073	**D3111312I-150F**
		1.319	33.50	3.957	5.331	8.047	1.500	2.126	0.071	**D3113350M-150F**
		1.339	34.00	4.016	5.449	8.165	1.500	2.126	0.067	**D3113400M-150F**
		1.358	34.50	4.075	5.449	8.165	1.500	2.126	0.061	**D3113450M-150F**
		1.375	34.92	4.125	5.449	8.165	1.500	2.126	0.056	**D3111375I-150F**
		1.378	35.00	4.134	5.567	8.283	1.500	2.126	0.055	**D3113500M-150F**
		1.398	35.50	4.193	5.567	8.283	1.500	2.126	0.051	**D3113550M-150F**
		1.417	36.00	4.252	5.685	8.402	1.500	2.126	0.047	**D3113600M-150F**
		1.437	36.50	4.311	5.685	8.402	1.500	2.126	0.042	**D3113650M-150F**
		1.457	37.00	4.370	5.803	8.520	1.500	2.126	0.035	**D3113700M-150F**
		1.476	37.50	4.429	5.803	8.520	1.500	2.126	0.032	**D3113750M-150F**
		1.496	38.00	4.488	5.921	8.638	1.500	2.126	0.028	**D3113800M-150F**
		1.500	38.10	4.500	5.921	8.638	1.500	2.126	0.027	**D3111500I-150F**
		1.516	38.50	4.547	5.921	8.638	1.500	2.126	0.022	**D3113850M-150F**

IC Inserts

ISO Material	Part No.	Insert Screw	Torx® Driver	Admissible Tightening Torque
P	**4T-11T306-P**	7488-T15-1	8T-15	30.9 in-lbs (3.5 N-m)
S M	**4T-11T306-M**			
H	**4T-11T306-H**			
K	**4T-11T306-K**			
N	**4T-11T306-N**			

Expected Hole Tolerances

Length	in	mm
2xD	-.006 / +.010	-.15 / +.25
3xD	-.006 / +.010	-.15 / +.25
4xD	-.006 / +.012	-.15 / +.30

A55: 34 - 35 (Key on A55: 1)

A55: 31 - 33

A55: 30

i = Imperial (in)
m = Metric (mm)
IC inserts sold in quantities of 10
Insert screws sold in quantities of 10

4TEX Drill Holders | Imperial Shank

11 Series | Diameter Range: 1.260" - 1.535" (32.00 mm - 38.99 mm)

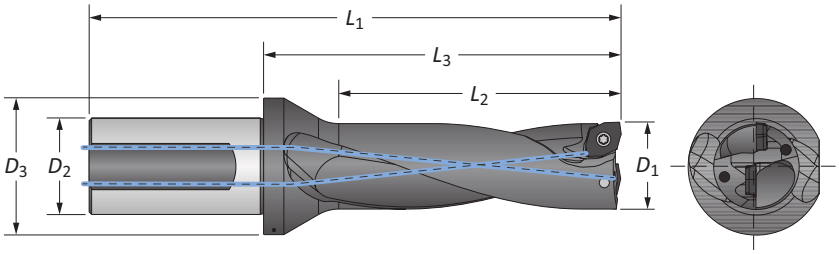

Imperial Shank

	Length	D_1 in	D_1 mm	Body L_2	Body L_3	Body L_1	Shank D_2	Shank D_3	Max Offset	Part No.
i	4xD	1.260	32.00	5.039	6.079	8.795	1.500	2.126	0.087	**D4113200M-150F**
		1.280	32.50	5.118	6.079	8.795	1.500	2.126	0.081	**D4113250M-150F**
		1.299	33.00	5.197	6.236	8.953	1.500	2.126	0.075	**D4113300M-150F**
		1.312	33.32	5.248	6.236	8.953	1.500	2.126	0.073	**D4111312I-150F**
		1.319	33.50	5.276	6.236	8.953	1.500	2.126	0.071	**D4113350M-150F**
		1.339	34.00	5.354	6.394	9.110	1.500	2.126	0.067	**D4113400M-150F**
		1.358	34.50	5.433	6.394	9.110	1.500	2.126	0.061	**D4113450M-150F**
		1.375	34.92	5.500	6.394	9.110	1.500	2.126	0.056	**D4111375I-150F**
		1.378	35.00	5.512	6.551	9.268	1.500	2.126	0.055	**D4113500M-150F**
		1.398	35.50	5.591	6.551	9.268	1.500	2.126	0.051	**D4113550M-150F**
		1.417	36.00	5.669	6.709	9.425	1.500	2.126	0.047	**D4113600M-150F**
		1.437	36.50	5.748	6.709	9.425	1.500	2.126	0.042	**D4113650M-150F**
		1.457	37.00	5.827	6.866	9.583	1.500	2.126	0.035	**D4113700M-150F**
		1.476	37.50	5.906	6.866	9.583	1.500	2.126	0.032	**D4113750M-150F**
		1.496	38.00	5.984	7.024	9.740	1.500	2.126	0.028	**D4113800M-150F**
		1.500	38.10	6.000	7.024	9.740	1.500	2.126	0.027	**D4111500I-150F**
		1.516	38.50	6.063	7.024	9.740	1.500	2.126	0.022	**D4113850M-150F**

IC Inserts

ISO Material	Part No.	Insert Screw	Torx® Driver	Admissible Tightening Torque
P	**4T-11T306-P**	7488-T15-1	8T-15	30.9 in-lbs (3.5 N-m)
S M	**4T-11T306-M**			
H	**4T-11T306-H**			
K	**4T-11T306-K**			
N	**4T-11T306-N**			

Expected Hole Tolerances

Length	in	mm
2xD	-.006 / +.010	-.15 / +.25
3xD	-.006 / +.010	-.15 / +.25
4xD	-.006 / +.012	-.15 / +.30

A55: 34 - 35
Key on A55: 1
A55: 31 - 33
A55: 30

i = Imperial (in)
m = Metric (mm)
IC inserts sold in quantities of 10
Insert screws sold in quantities of 10

4TEX Drill Holders | Metric Shank

11 Series | Diameter Range: 1.260" - 1.535" (32.00 mm - 38.99 mm)

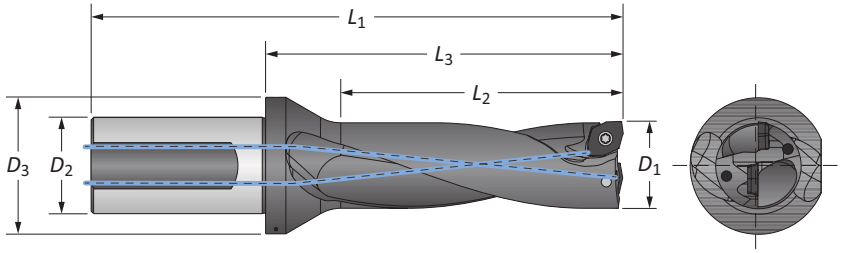

Metric Shank

	Length	D_1 in	D_1 mm	Body L_2	Body L_3	Body L_1	Shank D_2	Shank D_3	Max Offset	Part No.
m	2xD	1.260	32.00	64.00	100.40	169.40	40.00	54.00	2.20	D2113200M-40FM
		1.280	32.50	65.00	100.40	169.40	40.00	54.00	2.05	D2113250M-40FM
		1.299	33.00	66.00	102.40	171.40	40.00	54.00	1.90	D2113300M-40FM
		1.312	33.32	66.65	102.40	171.40	40.00	54.00	1.84	D2111312I-40FM
		1.319	33.50	67.00	102.40	171.40	40.00	54.00	1.80	D2113350M-40FM
		1.339	34.00	68.00	104.40	173.40	40.00	54.00	1.70	D2113400M-40FM
		1.358	34.50	69.00	104.40	173.40	40.00	54.00	1.55	D2113450M-40FM
		1.375	34.92	69.85	104.40	173.40	40.00	54.00	1.42	D2111375I-40FM
		1.378	35.00	70.00	106.40	175.40	40.00	54.00	1.40	D2113500M-40FM
		1.398	35.50	71.00	106.40	175.40	40.00	54.00	1.30	D2113550M-40FM
		1.417	36.00	72.00	108.40	177.40	40.00	54.00	1.20	D2113600M-40FM
		1.437	36.50	73.00	108.40	177.40	40.00	54.00	1.06	D2113650M-40FM
		1.457	37.00	74.00	110.40	179.40	40.00	54.00	0.90	D2113700M-40FM
		1.476	37.50	75.00	110.40	179.40	40.00	54.00	0.81	D2113750M-40FM
		1.496	38.00	76.00	112.40	181.40	40.00	54.00	0.70	D2113800M-40FM
		1.500	38.10	76.20	112.40	181.40	40.00	54.00	0.69	D2111500I-40FM
		1.516	38.50	77.00	112.40	181.40	40.00	54.00	0.56	D2113850M-40FM
	3xD	1.260	32.00	96.00	132.40	201.40	40.00	54.00	2.20	D3113200M-40FM
		1.280	32.50	97.50	132.40	201.40	40.00	54.00	2.05	D3113250M-40FM
		1.299	33.00	99.00	135.40	204.40	40.00	54.00	1.90	D3113300M-40FM
		1.312	33.32	99.97	135.40	204.40	40.00	54.00	1.84	D3111312I-40FM
		1.319	33.50	100.50	135.40	204.40	40.00	54.00	1.80	D3113350M-40FM
		1.339	34.00	102.00	138.40	207.40	40.00	54.00	1.70	D3113400M-40FM
		1.358	34.50	103.50	138.40	207.40	40.00	54.00	1.55	D3113450M-40FM
		1.375	34.92	104.78	138.40	207.40	40.00	54.00	1.42	D3111375I-40FM
		1.378	35.00	105.00	141.40	210.40	40.00	54.00	1.40	D3113500M-40FM
		1.398	35.50	106.50	141.40	210.40	40.00	54.00	1.30	D3113550M-40FM
		1.417	36.00	108.00	144.40	213.40	40.00	54.00	1.20	D3113600M-40FM
		1.437	36.50	109.50	144.40	213.40	40.00	54.00	1.06	D3113650M-40FM
		1.457	37.00	111.00	147.40	216.40	40.00	54.00	0.90	D3113700M-40FM
		1.476	37.50	112.50	147.40	216.40	40.00	54.00	0.81	D3113750M-40FM
		1.496	38.00	114.00	150.40	219.40	40.00	54.00	0.70	D3113800M-40FM
		1.500	38.10	114.30	150.40	219.40	40.00	54.00	0.69	D3111500I-40FM
		1.516	38.50	115.50	150.40	219.40	40.00	54.00	0.56	D3113850M-150F

IC Inserts

ISO Material	Part No.	Insert Screw	Torx® Driver	Admissible Tightening Torque
P	4T-11T306-P	7488-T15-1	8T-15	30.9 in-lbs (3.5 N-m)
S M	4T-11T306-M			
H	4T-11T306-H			
K	4T-11T306-K			
N	4T-11T306-N			

Expected Hole Tolerances

Length	in	mm
2xD	-.006 / +.010	-.15 / +.25
3xD	-.006 / +.010	-.15 / +.25
4xD	-.006 / +.012	-.15 / +.30

A55: 34 - 35
Key on A55: 1
A55: 31 - 33
A55: 30

i = Imperial (in)
m = Metric (mm)
IC inserts sold in quantities of 10
Insert screws sold in quantities of 10

4TEX Drill Holders | Metric Shank

11 Series | Diameter Range: 1.260" - 1.535" (32.00 mm - 38.99 mm)

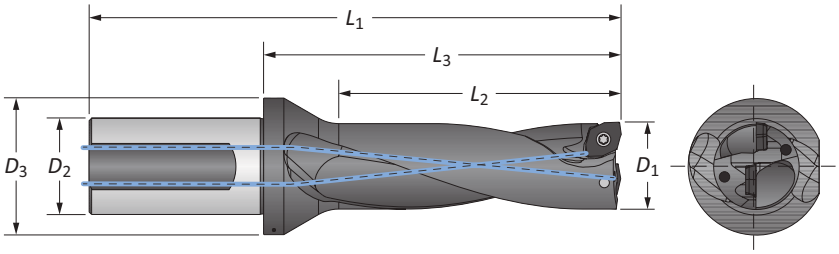

Metric Shank

	Length	D_1 in	D_1 mm	Body L_2	Body L_3	Body L_1	Shank D_2	Shank D_3	Max Offset	Part No.
m	4xD	1.260	32.00	128.00	154.40	223.40	40.00	54.00	2.20	**D4113200M-40FM**
		1.280	32.50	130.00	154.40	223.40	40.00	54.00	2.05	**D4113250M-40FM**
		1.299	33.00	132.00	158.40	227.40	40.00	54.00	1.90	**D4113300M-40FM**
		1.312	33.32	133.30	158.40	227.40	40.00	54.00	1.84	**D4111312I-40FM**
		1.319	33.50	134.00	158.40	227.40	40.00	54.00	1.80	**D4113350M-40FM**
		1.339	34.00	136.00	162.40	231.40	40.00	54.00	1.70	**D4113400M-40FM**
		1.358	34.50	138.00	162.40	231.40	40.00	54.00	1.55	**D4113450M-40FM**
		1.375	34.92	139.70	162.40	231.40	40.00	54.00	1.42	**D4111375I-40FM**
		1.378	35.00	140.00	166.40	235.40	40.00	54.00	1.40	**D4113500M-40FM**
		1.398	35.50	142.00	166.40	235.40	40.00	54.00	1.30	**D4113550M-40FM**
		1.417	36.00	144.00	170.40	239.40	40.00	54.00	1.20	**D4113600M-40FM**
		1.437	36.50	146.00	170.40	239.40	40.00	54.00	1.06	**D4113650M-40FM**
		1.457	37.00	148.00	174.40	243.40	40.00	54.00	0.90	**D4113700M-40FM**
		1.476	37.50	150.00	174.40	243.40	40.00	54.00	0.81	**D4113750M-40FM**
		1.496	38.00	152.00	178.40	247.40	40.00	54.00	0.70	**D4113800M-40FM**
		1.500	38.10	152.40	178.40	247.40	40.00	54.00	0.69	**D4111500I-40FM**
		1.516	38.50	154.00	178.40	247.40	40.00	54.00	0.56	**D4113850M-40FM**

IC Inserts

ISO Material	Part No.	Insert Screw	Torx® Driver	Admissible Tightening Torque
P	**4T-11T306-P**	7488-T15-1	8T-15	30.9 in-lbs (3.5 N-m)
S M	**4T-11T306-M**			
H	**4T-11T306-H**			
K	**4T-11T306-K**			
N	**4T-11T306-N**			

Expected Hole Tolerances

Length	in	mm
2xD	-.006 / +.010	-.15 / +.25
3xD	-.006 / +.010	-.15 / +.25
4xD	-.006 / +.012	-.15 / +.30

A55: 34 - 35
Key on A55: 1
A55: 31 - 33
A55: 30

ⓘ = Imperial (in)
ⓜ = Metric (mm)
IC inserts sold in quantities of 10
Insert screws sold in quantities of 10

4TEX Drill Holders | Imperial Shank

14 Series | Diameter Range: 1.536" - 1.850" (39.00 mm - 47.00 mm)

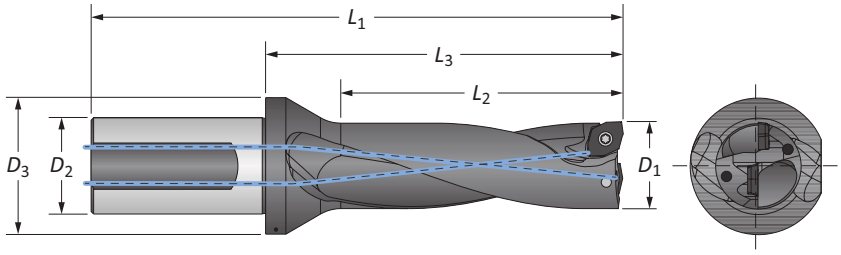

Imperial Shank

Length		D_1 in	D_1 mm	Body L_2	Body L_3	Body L_1	Shank D_2	Shank D_3	Max Offset	Part No.
	2xD	1.535	39.00	3.071	4.346	7.063	1.500	2.126	0.110	**D2143900M-150F**
		1.555	39.50	3.110	4.346	7.063	1.500	2.126	0.105	**D2143950M-150F**
		1.562	39.67	3.124	4.346	7.063	1.500	2.126	0.103	**D2141562I-150F**
		1.575	40.00	3.150	4.425	7.142	1.500	2.126	0.098	**D2144000M-150F**
		1.594	40.50	3.189	4.425	7.142	1.500	2.126	0.095	**D2144050M-150F**
		1.614	41.00	3.228	4.504	7.220	1.500	2.126	0.091	**D2144100M-150F**
		1.625	41.28	3.250	4.504	7.220	1.500	2.126	0.088	**D2141625I-150F**
		1.634	41.50	3.268	4.504	7.220	1.500	2.126	0.085	**D2144150M-150F**
		1.654	42.00	3.307	4.583	7.299	1.500	2.126	0.079	**D2144200M-150F**
		1.673	42.50	3.346	4.583	7.299	1.500	2.126	0.075	**D2144250M-150F**
		1.687	42.85	3.374	4.583	7.299	1.500	2.126	0.072	**D2141687I-150F**
		1.693	43.00	3.386	4.661	7.378	1.500	2.323	0.071	**D2144300M-150F**
		1.713	43.50	3.425	4.661	7.378	1.500	2.323	0.065	**D2144350M-150F**
		1.732	44.00	3.465	4.740	7.457	1.500	2.323	0.059	**D2144400M-150F**
		1.750	44.45	3.500	4.740	7.457	1.500	2.323	0.055	**D2141750I-150F**
		1.752	44.50	3.504	4.740	7.457	1.500	2.323	0.055	**D2144450M-150F**
		1.772	45.00	3.543	4.819	7.535	1.500	2.323	0.051	**D2144500M-150F**
		1.791	45.50	3.583	4.819	7.535	1.500	2.323	0.045	**D2144550M-150F**
		1.812	46.02	3.624	4.898	7.614	1.500	2.323	0.040	**D2141812I-150F**
		1.811	46.00	3.622	4.898	7.614	1.500	2.323	0.039	**D2144600M-150F**
		1.831	46.50	3.661	4.898	7.614	1.500	2.323	0.036	**D2144650M-150F**
		1.850	47.00	3.701	4.976	7.693	1.500	2.323	0.031	**D2144700M-150F**
	3xD	1.535	39.00	4.606	5.882	8.598	1.500	2.126	0.110	**D3143900M-150F**
		1.555	39.50	4.665	5.882	8.598	1.500	2.126	0.105	**D3143950M-150F**
		1.562	39.67	4.686	5.882	8.598	1.500	2.126	0.103	**D3141562I-150F**
		1.575	40.00	4.724	6.000	8.717	1.500	2.126	0.098	**D3144000M-150F**
		1.594	40.50	4.783	6.000	8.717	1.500	2.126	0.095	**D3144050M-150F**
		1.614	41.00	4.843	6.118	8.835	1.500	2.126	0.091	**D3144100M-150F**
		1.625	41.28	4.875	6.118	8.835	1.500	2.126	0.088	**D3141625I-150F**
		1.634	41.50	4.902	6.118	8.835	1.500	2.126	0.085	**D3144150M-150F**
		1.654	42.00	4.961	6.236	8.953	1.500	2.126	0.079	**D3144200M-150F**
		1.673	42.50	5.020	6.236	8.953	1.500	2.126	0.075	**D3144250M-150F**
		1.687	42.85	5.061	6.236	8.953	1.500	2.126	0.072	**D3141687I-150F**
		1.693	43.00	5.079	6.354	9.071	1.500	2.323	0.071	**D3144300M-150F**

IC Inserts

ISO Material	Part No.	Insert Screw	Torx® Driver	Admissible Tightening Torque
P	**4T-140408-P**	7595-T20-1	8T-20	39.8 in-lbs (4.5 N-m)
S M	**4T-140408-M**			
H	**4T-140408-H**			
K	**4T-140408-K**			
N	**4T-140408-N**			

Expected Hole Tolerances

Length	in	mm
2xD	-.008 / +.012	-.20 / +.30
3xD	-.008 / +.012	-.20 / +.30
4xD	-.008 / +.014	-.20 / +.35

A55: 34 - 35
Key on A55: 1
A55: 31 - 33
A55: 30

ⓘ = Imperial (in)
ⓜ = Metric (mm)
IC inserts sold in quantities of 10
Insert screws sold in quantities of 10

4TEX Drill Holders | Imperial Shank

14 Series | Diameter Range: 1.536" - 1.850" (39.00 mm - 47.00 mm)

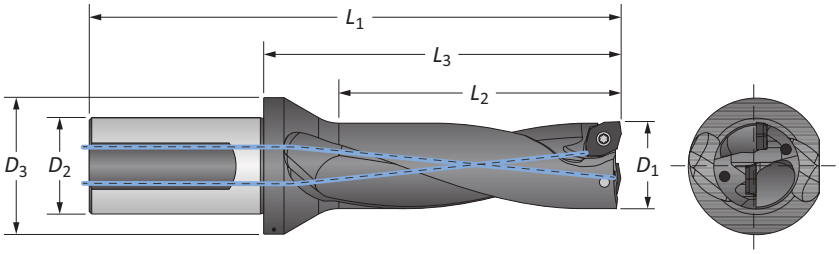

Imperial Shank

Length		D_1 in	D_1 mm	Body L_2	Body L_3	Body L_1	Shank D_2	Shank D_3	Max Offset	Part No.
	3xD	1.713	43.50	5.138	6.354	9.071	1.500	2.323	0.065	**D3144350M-150F**
		1.732	44.00	5.197	6.472	9.189	1.500	2.323	0.059	**D3144400M-150F**
		1.750	44.45	5.250	6.472	9.189	1.500	2.323	0.055	**D3141750I-150F**
		1.752	44.50	5.256	6.472	9.189	1.500	2.323	0.055	**D3144450M-150F**
		1.772	45.00	5.315	6.591	9.307	1.500	2.323	0.051	**D3144500M-150F**
		1.791	45.50	5.374	6.591	9.307	1.500	2.323	0.045	**D3144550M-150F**
		1.811	46.00	5.433	6.709	9.425	1.500	2.323	0.039	**D3144600M-150F**
		1.812	46.02	5.436	6.709	9.425	1.500	2.323	0.040	**D3141812I-150F**
		1.831	46.50	5.492	6.709	9.425	1.500	2.323	0.036	**D3144650M-150F**
		1.850	47.00	5.551	6.827	9.543	1.500	2.323	0.031	**D3144700M-150F**
	4xD	1.535	39.00	6.142	7.417	10.134	1.500	2.126	0.110	**D4143900M-150F**
		1.555	39.50	6.220	7.417	10.134	1.500	2.126	0.105	**D4143950M-150F**
		1.562	39.67	6.248	7.417	10.134	1.500	2.126	0.103	**D4141562I-150F**
		1.575	40.00	6.299	7.575	10.291	1.500	2.126	0.098	**D4144000M-150F**
		1.594	40.50	6.378	7.575	10.291	1.500	2.126	0.095	**D4144050M-150F**
		1.614	41.00	6.457	7.732	10.449	1.500	2.126	0.091	**D4144100M-150F**
		1.625	41.28	6.500	7.732	10.449	1.500	2.126	0.088	**D4141625I-150F**
		1.634	41.50	6.535	7.732	10.449	1.500	2.126	0.085	**D4144150M-150F**
		1.654	42.00	6.614	7.890	10.606	1.500	2.126	0.079	**D4144200M-150F**
		1.673	42.50	6.693	7.890	10.606	1.500	2.126	0.075	**D4144250M-150F**
		1.687	42.85	6.748	7.890	10.606	1.500	2.126	0.072	**D4141687I-150F**
		1.693	43.00	6.772	8.047	10.764	1.500	2.323	0.071	**D4144300M-150F**
		1.713	43.50	6.850	8.047	10.764	1.500	2.323	0.065	**D4144350M-150F**
		1.732	44.00	6.929	8.205	10.921	1.500	2.323	0.059	**D4144400M-150F**
		1.750	44.45	7.000	8.205	10.921	1.500	2.323	0.055	**D4141750I-150F**
		1.752	44.50	7.008	8.205	10.921	1.500	2.323	0.055	**D4144450M-150F**
		1.772	45.00	7.087	8.362	11.079	1.500	2.323	0.051	**D4144500M-150F**
		1.791	45.50	7.165	8.362	11.079	1.500	2.323	0.045	**D4144550M-150F**
		1.811	46.00	7.244	8.520	11.236	1.500	2.323	0.039	**D4144600M-150F**
		1.812	46.02	7.248	8.520	11.236	1.500	2.323	0.040	**D4141812I-150F**
		1.831	46.50	7.323	8.520	11.236	1.500	2.323	0.036	**D4144650M-150F**
		1.850	47.00	7.402	8.677	11.394	1.500	2.323	0.031	**D4144700M-150F**

IC Inserts

ISO Material	Part No.	Insert Screw	Torx® Driver	Admissible Tightening Torque
P	**4T-140408-P**	7595-T20-1	8T-20	39.8 in-lbs (4.5 N-m)
S M	**4T-140408-M**			
H	**4T-140408-H**			
K	**4T-140408-K**			
N	**4T-140408-N**			

Expected Hole Tolerances

Length	in	mm
2xD	-.008 / +.012	-.20 / +.30
3xD	-.008 / +.012	-.20 / +.30
4xD	-.008 / +.014	-.20 / +.35

A55: 34 - 35
Key on A55: 1
A55: 31 - 33
A55: 30

ⓘ = Imperial (in)
ⓜ = Metric (mm)
IC inserts sold in quantities of 10
Insert screws sold in quantities of 10

4TEX Drill Holders | Metric Shank

14 Series | Diameter Range: 1.536" - 1.850" (39.00 mm - 47.00 mm)

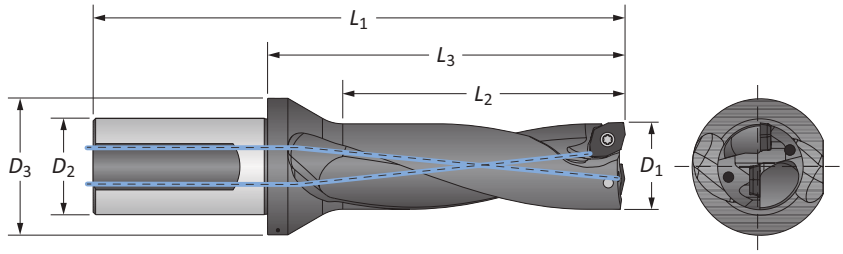

Metric Shank

	Length	D_1 in	D_1 mm	Body L_2	Body L_3	Body L_1	Shank D_2	Shank D_3	Max Offset	Part No.
m	2xD	1.535	39.00	78.00	110.40	179.40	40.00	54.00	2.80	D2143900M-40FM
		1.555	39.50	79.00	110.40	179.40	40.00	54.00	2.66	D2143950M-40FM
		1.562	39.67	79.40	110.40	179.40	40.00	54.00	2.61	D2141562I-40FM
		1.575	40.00	80.00	112.40	181.40	40.00	54.00	2.50	D2144000M-40FM
		1.594	40.50	81.00	112.40	181.40	40.00	54.00	2.41	D2144050M-40FM
		1.614	41.00	82.00	114.40	183.40	40.00	54.00	2.30	D2144100M-40FM
		1.625	41.28	82.55	114.40	183.40	40.00	54.00	2.23	D2141625I-40FM
		1.634	41.50	83.00	114.40	183.40	40.00	54.00	2.16	D2144150M-40FM
		1.654	42.00	84.00	116.40	185.40	40.00	54.00	2.00	D2144200M-40FM
		1.673	42.50	85.00	116.40	185.40	40.00	54.00	1.90	D2144250M-40FM
		1.687	42.85	85.70	116.40	185.40	40.00	54.00	1.82	D2141687I-40FM
		1.693	43.00	86.00	118.40	187.40	40.00	59.00	1.80	D2144300M-40FM
		1.713	43.50	87.00	118.40	187.40	40.00	59.00	1.65	D2144350M-40FM
		1.732	44.00	88.00	120.40	189.40	40.00	59.00	1.50	D2144400M-40FM
		1.750	44.45	88.90	120.40	189.40	40.00	59.00	1.41	D2141750I-40FM
		1.752	44.50	89.00	120.40	189.40	40.00	59.00	1.40	D2144450M-40FM
		1.772	45.00	90.00	122.40	191.40	40.00	59.00	1.30	D2144500M-40FM
		1.791	45.50	91.00	122.40	191.40	40.00	59.00	1.15	D2144550M-40FM
		1.812	46.02	92.10	124.40	193.40	40.00	59.00	1.02	D2141812I-40FM
		1.811	46.00	92.00	124.40	193.40	40.00	59.00	1.00	D2144600M-40FM
		1.831	46.50	93.00	124.40	193.40	40.00	59.00	0.90	D2144650M-40FM
		1.850	47.00	94.00	126.40	195.40	40.00	59.00	0.80	D2144700M-40FM
	3xD	1.535	39.00	117.00	149.40	218.40	40.00	54.00	2.80	D3143900M-40FM
		1.555	39.50	118.50	149.40	218.40	40.00	54.00	2.66	D3143950M-40FM
		1.562	39.67	119.02	149.40	218.40	40.00	54.00	2.61	D3141562I-40FM
		1.575	40.00	120.00	152.40	221.40	40.00	54.00	2.50	D3144000M-40FM
		1.594	40.50	121.50	152.40	221.40	40.00	54.00	2.41	D3144050M-40FM
		1.614	41.00	123.00	155.40	224.40	40.00	54.00	2.30	D3144100M-40FM
		1.625	41.28	123.83	155.40	224.40	40.00	54.00	2.23	D3141625I-40FM
		1.634	41.50	124.50	155.40	224.40	40.00	54.00	2.16	D3144150M-40FM
		1.654	42.00	126.00	158.40	227.40	40.00	54.00	2.00	D3144200M-40FM
		1.673	42.50	127.50	158.40	227.40	40.00	54.00	1.90	D3144250M-40FM
		1.687	42.85	128.55	158.40	227.40	40.00	54.00	1.82	D3141687I-40FM
		1.693	43.00	129.00	161.40	230.40	40.00	59.00	1.80	D3144300M-40FM

IC Inserts

ISO Material	Part No.	Insert Screw	Torx® Driver	Admissible Tightening Torque
P	4T-140408-P	7595-T20-1	8T-20	39.8 in-lbs (4.5 N-m)
S M	4T-140408-M			
H	4T-140408-H			
K	4T-140408-K			
N	4T-140408-N			

Expected Hole Tolerances

Length	in	mm
2xD	-.008 / +.012	-.20 / +.30
3xD	-.008 / +.012	-.20 / +.30
4xD	-.008 / +.014	-.20 / +.35

A55: 34 - 35 (Key on A55: 1)

A55: 31 - 33

A55: 30

ⓘ = Imperial (in)
ⓜ = Metric (mm)
IC inserts sold in quantities of 10
Insert screws sold in quantities of 10

4TEX Drill Holders | Metric Shank

14 Series | Diameter Range: 1.536" - 1.850" (39.00 mm - 47.00 mm)

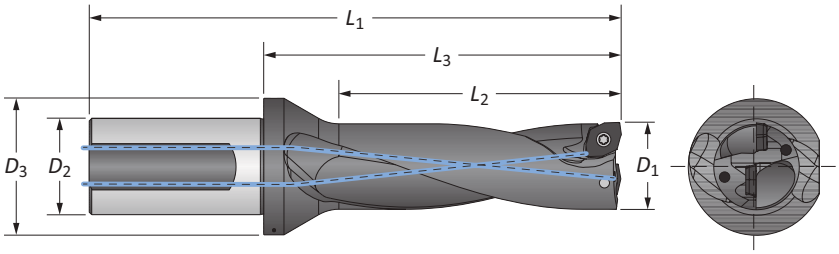

Metric Shank

	Length	D_1 in	D_1 mm	Body L_2	Body L_3	Body L_1	Shank D_2	Shank D_3	Max Offset	Part No.
m	3xD	1.713	43.50	130.50	161.40	230.40	40.00	59.00	1.65	D3144350M-40FM
		1.732	44.00	132.00	164.40	233.40	40.00	59.00	1.50	D3144400M-40FM
		1.750	44.45	133.35	164.40	233.40	40.00	59.00	1.41	D3141750I-40FM
		1.752	44.50	133.50	164.40	233.40	40.00	59.00	1.40	D3144450M-40FM
		1.772	45.00	135.00	167.40	236.40	40.00	59.00	1.30	D3144500M-40FM
		1.791	45.50	136.50	167.40	236.40	40.00	59.00	1.15	D3144550M-40FM
		1.811	46.00	138.00	170.40	239.40	40.00	59.00	1.00	D3144600M-40FM
		1.812	46.02	138.07	170.40	239.40	40.00	59.00	1.02	D3141812I-40FM
		1.831	46.50	139.50	170.40	239.40	40.00	59.00	0.90	D3144650M-40FM
		1.850	47.00	141.00	173.40	242.40	40.00	59.00	0.80	D3144700M-40FM
	4xD	1.535	39.00	156.00	188.40	257.40	40.00	54.00	2.80	D4143900M-40FM
		1.555	39.50	158.00	188.40	257.40	40.00	54.00	2.66	D4143950M-40FM
		1.562	39.67	158.70	188.40	257.40	40.00	54.00	2.61	D4141562I-40FM
		1.575	40.00	160.00	192.40	261.40	40.00	54.00	2.50	D4144000M-40FM
		1.594	40.50	162.00	192.40	261.40	40.00	54.00	2.41	D4144050M-40FM
		1.614	41.00	164.00	196.40	265.40	40.00	54.00	2.30	D4144100M-40FM
		1.625	41.28	165.10	196.40	265.40	40.00	54.00	2.23	D4141625I-40FM
		1.634	41.50	166.00	196.40	265.40	40.00	54.00	2.16	D4144150M-40FM
		1.654	42.00	168.00	200.40	269.40	40.00	54.00	2.00	D4144200M-40FM
		1.673	42.50	170.00	200.40	269.40	40.00	54.00	1.90	D4144250M-40FM
		1.687	42.85	171.40	200.40	269.40	40.00	54.00	1.82	D4141687I-40FM
		1.693	43.00	172.00	204.40	273.40	40.00	59.00	1.80	D4144300M-40FM
		1.713	43.50	174.00	204.40	273.40	40.00	59.00	1.65	D4144350M-40FM
		1.732	44.00	176.00	208.40	277.40	40.00	59.00	1.50	D4144400M-40FM
		1.750	44.45	177.80	208.40	277.40	40.00	59.00	1.41	D4141750I-40FM
		1.752	44.50	178.00	208.40	277.40	40.00	59.00	1.40	D4144450M-40FM
		1.772	45.00	180.00	212.40	281.40	40.00	59.00	1.30	D4144500M-40FM
		1.791	45.50	182.00	212.40	281.40	40.00	59.00	1.15	D4144550M-40FM
		1.811	46.00	184.00	216.40	285.40	40.00	59.00	1.00	D4144600M-40FM
		1.812	46.02	184.10	216.40	285.40	40.00	59.00	1.02	D4141812I-40FM
		1.831	46.50	186.00	216.40	285.40	40.00	59.00	0.90	D4144650M-40FM
		1.850	47.00	188.00	220.40	289.40	40.00	59.00	0.80	D4144700M-40FM

IC Inserts

ISO Material	Part No.	Insert Screw	Torx® Driver	Admissible Tightening Torque
P	4T-140408-P	7595-T20-1	8T-20	39.8 in-lbs (4.5 N-m)
S M	4T-140408-M			
H	4T-140408-H			
K	4T-140408-K			
N	4T-140408-N			

Expected Hole Tolerances

Length	in	mm
2xD	-.008 / +.012	-.20 / +.30
3xD	-.008 / +.012	-.20 / +.30
4xD	-.008 / +.014	-.20 / +.35

A55: 34 - 35
Key on A55: 1
A55: 31 - 33
A55: 30

ⓘ = Imperial (in)
ⓜ = Metric (mm)
IC inserts sold in quantities of 10
Insert screws sold in quantities of 10

Eccentric Sleeves

For Cutting Diameter / Center Height Adjustment

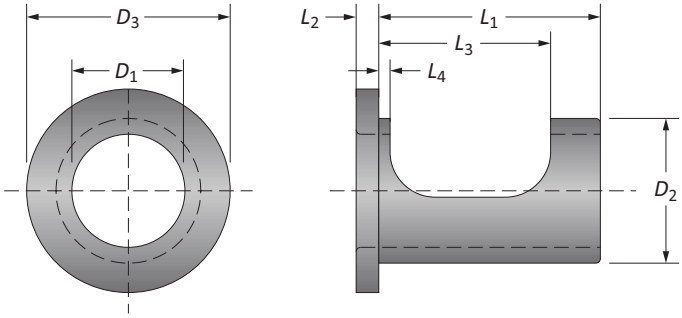

	Sleeve Dimensions								Adjustment Range	
	D_1	D_2	D_3	L_2	L_3	L_4	L_1	Part No.	Diameter*	Center Height
i	0.750	1.000	1.614	0.157	1.593	0.118	1.837	**SLEEVE-075F**	-0.008 to +0.016	-0.006 to +0.008
i	1.000	1.250	1.929	0.236	1.593	0.098	1.995	**SLEEVE-100F**	-0.008 to +0.016	-0.006 to +0.008
i	1.250	1.500	2.283	0.236	1.693	0.098	2.087	**SLEEVE-125F**	-0.008 to +0.016	-0.006 to +0.008
i	1.500	2.000	2.913	0.236	1.929	0.118	2.481	**SLEEVE-150F**	-0.008 to +0.024	-0.008 to +0.012
m	25.00	32.00	49.00	6.00	39.00	2.50	54.00	**SLEEVE-25FM**	-0.20 to +0.40	-0.15 to +0.20
m	32.00	40.00	58.00	6.00	43.00	2.50	59.00	**SLEEVE-32FM**	-0.20 to +0.40	-0.15 to +0.20
m	40.00	50.00	74.00	6.00	49.00	3.00	69.00	**SLEEVE-40FM**	-0.20 to +0.40	-0.20 to +0.30

*Diameter adjustment range refers to the cutting diameter.

Milling Applications
Peripheral Adjustment Position

Lathe Applications
Front Adjustment Position

i = Imperial (in)
m = Metric (mm)

Diameter Adjustment

Milling and Lathe Applications

For Milling Applications

1. Assemble the 4TEX drill, eccentric sleeve, and tool holder. Do not tighten the tool holder set screws.
2. Using the peripheral marks for milling machines, align the reference indentation on the holder with the 0 (zero) mark on the eccentric sleeve to have no offset.
3. Rotate the sleeve in the (+) or (-) direction to increase or decrease the nominal diameter.
4. Once the drill has arrived at the desired diameter, firmly tighten the top set screw first and then tighten the bottom set screw.

NOTICE: Eccentric sleeves are to be used with side-locking tool holders only. Damage may result with other styles of tool holders.

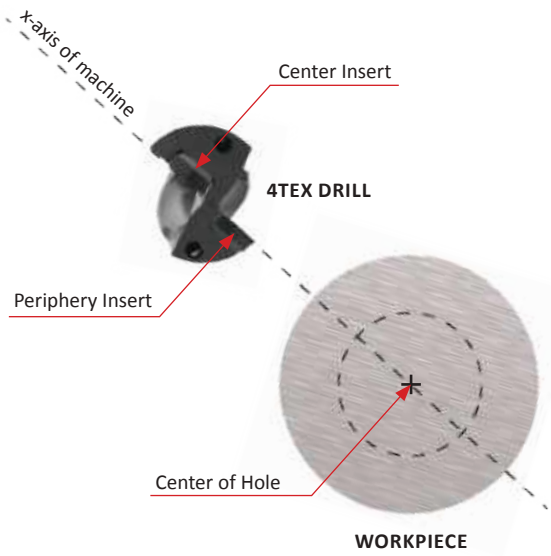

For Lathe Applications

1. Assemble the 4TEX drill into the lathe turret with the top face of the inserts parallel to the x-axis of the machine. This will allow for the diameter offsets to be made using the lathe's x-axis.
2. To increase the nominal diameter, offset the x-axis so the periphery insert moves away from the center of the hole.
3. To decrease the nominal diameter, offset the x-axis so the periphery insert moves toward the center of the hole.

NOTE: Eccentric sleeve is not required when adjusting the diameter of the hole on a lathe.

Center Height Alignment

Proper Center Line Position

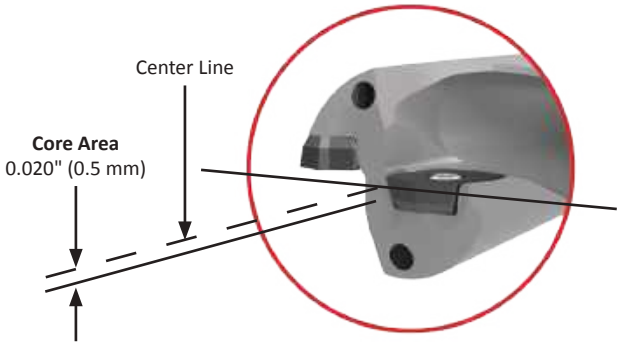

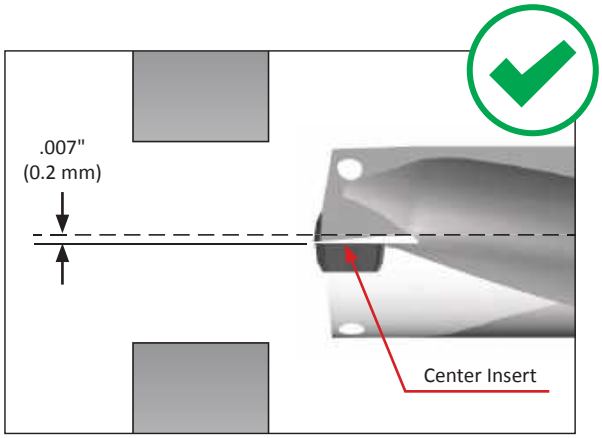

Proper Center Height Alignment

- The correct center height alignment will position the center insert .007" (0.2 mm) below the center line.

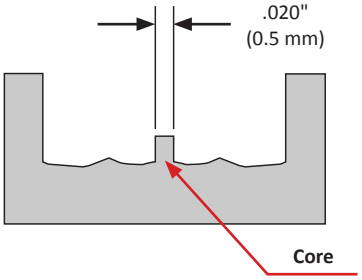

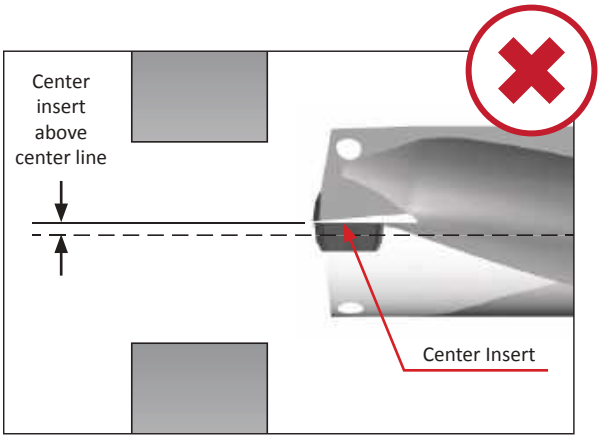

Center Insert Above the Center Line

- This will cause fracturing of the center insert
- Requires center height adjustment

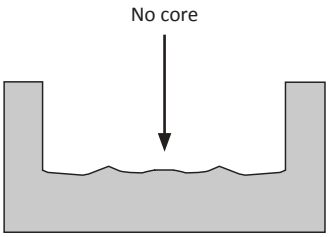

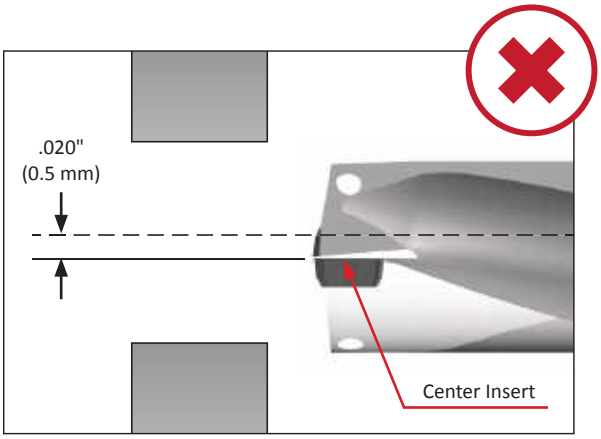

Center Insert Too Far Below Center Line

- This will cause the drill to interfere with the drilled hole
- This will impede chip evacuation on the periphery insert
- Requires center height adjustment

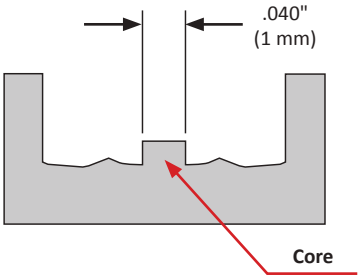

Center Height Alignment

How to Correct Issues

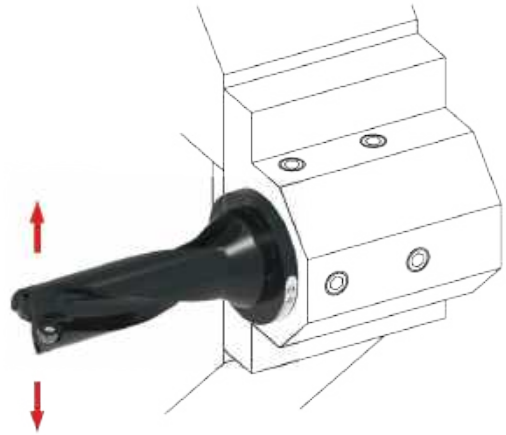

Method 1: Adjustment with X-Axis

1. Rotate the drill body so the position of the center line of the inserts is perpendicular to the lathe's x-axis.
2. Use the x-axis to offset the position of the center line in a (+) or (-) direction to increase or decrease the center core diameter at the bottom of the hole.

NOTE: This method does not allow diameter adjustments using the x-axis.

Method 2: Adjustment with Eccentric Sleeve

1. Assemble the drill to the turret using the eccentric sleeve, positioning the center line of the inserts parallel to the x-axis.
2. Align the reference indentation on the drill to the "0" setting on the flange face.
3. Rotate the sleeve (+) or (-) to increase or decrease the center height of the inserts in order to increase or decrease the core diameter at the bottom of the hole.

NOTE: This method still allows diameter adjustments using the x-axis.

NOTE (applies to both methods): Adjusting the center line of the inserts may affect the hole diameter produced. Method two is preferred to make center height adjustments and compensate for hole diameter with the x-axis.

Recommended Drilling Data | Imperial (inch)

ISO	Material	Hardness (BHN)	Speed (SFM) P K H AM480	Speed (SFM) M AM485	Speed (SFM) N TiCN	Feed Rate (IPR) by Diameter - 2xD, 3xD** 03, 04 Series (0.472" - 0.610")	05 Series (0.611" - 0.728")	06, 07 Series (0.729" - 1.043")	09, 11, 14 Series (1.044" - 1.850")
P	**Free-Machining Steel** 1118, 1215, 12L14, etc.	100-150	400 - 1200	400 - 1200	–	0.0025 - 0.004	0.0025 - 0.005	0.003 - 0.0055	0.003 - 0.0055
		150-200	400 - 1000	400 - 1000	–	0.0025 - 0.004	0.0025 - 0.005	0.003 - 0.0055	0.003 - 0.0055
		200-250	400 - 800	400 - 800	–	0.0025 - 0.004	0.0025 - 0.005	0.003 - 0.0055	0.003 - 0.0055
	Low-Carbon Steel 1010, 1020, 1025, 1522, 1144, etc.	85-125	400 - 1000	400 - 1000	–	0.0025 - 0.004	0.0025 - 0.005	0.003 - 0.0055	0.003 - 0.0055
		125-175	400 - 1000	400 - 1000	–	0.0025 - 0.004	0.0025 - 0.005	0.003 - 0.0055	0.003 - 0.0055
		175-225	400 - 800	400 - 800	–	0.0025 - 0.004	0.0025 - 0.005	0.003 - 0.0055	0.003 - 0.0055
		225-275	400 - 800	400 - 800	–	0.0025 - 0.004	0.0025 - 0.005	0.003 - 0.0055	0.003 - 0.0055
	Medium-Carbon Steel 1030, 1040, 1050, 1527, 1140, 1151, etc.	125-175	330 - 800	330 - 800	–	0.0015 - 0.0055	0.0025 - 0.0065	0.003 - 0.008	0.003 - 0.008
		175-225	330 - 800	330 - 800	–	0.0015 - 0.0055	0.0025 - 0.0065	0.003 - 0.008	0.003 - 0.008
		225-275	330 - 800	330 - 800	–	0.0015 - 0.0055	0.0025 - 0.0065	0.003 - 0.008	0.003 - 0.008
		275-325	330 - 600	330 - 600	–	0.0015 - 0.0055	0.0025 - 0.0065	0.003 - 0.008	0.003 -0 .008
	Alloy Steel 4140, 5140, 8640, etc.	125-175	330 - 800	–	–	0.0015 - 0.0055	0.0025 - 0.0065	0.003 - 0.008	0.003 - 0.008
		175-225	330 - 800	–	–	0.0015 - 0.0055	0.0025 - 0.0065	0.003 - 0.008	0.003 - 0.008
		225-275	330 - 800	–	–	0.0015 - 0.0055	0.0025 - 0.0065	0.003 - 0.008	0.003 - 0.008
		275-325	330 - 800	–	–	0.0015 - 0.0055	0.0025 - 0.0065	0.003 - 0.008	0.003 - 0.008
		325-375	330 - 800	–	–	0.0015 - 0.0055	0.0025 - 0.0065	0.003 - 0.008	0.003 - 0.008
	High-Strength Alloy 4340, 4330V, 300M, etc.	225-300	330 - 600	–	–	0.0015 - 0.0055	0.0025 - 0.0065	0.003 - 0.008	0.003 - 0.008
		300-350	330 - 600	–	–	0.0015 - 0.0055	0.0025 - 0.0065	0.003 - 0.008	0.003 - 0.008
		350-400	330 - 600	–	–	0.0015 - 0.0055	0.0025 - 0.0065	0.003 - 0.008	0.003 - 0.008
	Structural Steel A36, A285, A516, etc.	100-150	330 - 600	330 - 600	–	0.0015 - 0.0055	0.0025 - 0.0065	0.003 - 0.008	0.003 - 0.008
		150-250	330 - 600	330 - 600	–	0.0015 - 0.0055	0.0025 - 0.0065	0.003 - 0.008	0.003 - 0.008
		250-350	330 - 600	–	–	0.0015 - 0.0055	0.0025 - 0.0065	0.003 - 0.008	0.003 - 0.008
	Tool Steel H-13, H-21, A-4, 0-2, S-3, etc.	150-200	270 - 600	270 - 600	–	0.0015 - 0.003	0.0025 - 0.005	0.003 - 0.006	0.003 - 0.006
		200-250	270 - 600	–	–	0.0015 - 0.003	0.0025 - 0.005	0.003 - 0.006	0.003 - 0.006
S	**High-Temp Alloy*** Hastelloy B, Inconel 600, etc.	140 - 220	100 - 250	100 - 250	–	0.002 - 0.003	0.002 - 0.003	0.0025 - 0.004	0.0025 - 0.004
		220 - 310	100 - 200	100 - 200	–	0.002 - 0.003	0.002 - 0.003	0.0025 - 0.004	0.0025 - 0.004
	Titanium Alloy*	140 - 220	140 - 500	140 - 500	–	0.002 - 0.003	0.002 - 0.003	0.0025 - 0.004	0.0025 - 0.004
		220 - 310	140 - 300	140 - 300	–	0.002 - 0.003	0.002 - 0.003	0.0025 - 0.004	0.0025 - 0.004
	Aerospace Alloy* S82	185 - 275	100 - 250	100 - 250	–	0.002 - 0.003	0.002 - 0.003	0.0025 - 0.004	0.0025 - 0.004
		275 - 350	100 - 200	100 - 200	–	0.002 - 0.003	0.002 - 0.003	0.0025 - 0.004	0.0025 - 0.004
M	**Stainless Steel 400 Series** 416, 420, etc.	185 - 275	240 - 600	240 - 700	–	0.0015 - 0.004	0.0025 - 0.005	0.0025 - 0.0055	0.0025 - 0.0055
		275 - 350	240 - 470	240 - 500	–	0.0015 - 0.004	0.0025 - 0.005	0.0025 - 0.0055	0.0025 - 0.0055
	Stainless Steel 300 Series 304, 316, 17-4PH, etc.	135 - 185	240 - 600	240 - 700	–	0.0015 - 0.004	0.0025 - 0.005	0.0025 - 0.0055	0.0025 - 0.0055
		185 - 275	240 - 470	240 - 500	–	0.0015 - 0.004	0.0025 - 0.005	0.0025 - 0.0055	0.0025 - 0.0055
	Super Duplex Stainless Steel	135 - 185	240 - 600	240 - 700	–	0.0015 - 0.004	0.0025 - 0.005	0.0025 - 0.0055	0.0025 - 0.0055
		185 - 275	240 - 470	240 - 500	–	0.0015 - 0.004	0.0025 - 0.005	0.0025 - 0.0055	0.0025 - 0.0055
H	**Wear Plate** Hardox, AR400, T-1, etc.	400	100 - 200	–	–	0.0015 - 0.003	0.0025 - 0.005	0.003 - 0.006	0.003 - 0.006
		500	100 - 200	–	–	0.0015 - 0.003	0.0025 - 0.005	0.003 - 0.006	0.003 - 0.006
		600	100 - 200	–	–	0.0015 - 0.003	0.0025 - 0.005	0.003 - 0.006	0.003 - 0.006
	Hardened Steel	300 - 400	100 - 300	–	–	0.0015 - 0.003	0.0025 - 0.005	0.003 - 0.006	0.003 - 0.006
		400 - 500	100 - 200	–	–	0.0015 - 0.003	0.0025 - 0.005	0.003 - 0.006	0.003 - 0.006
K	**Nodular, Grey, Ductile Cast Iron**	120 - 150	300 - 800	–	–	0.003 - 0.0055	0.003 - 0.007	0.003 - 0.008	0.003 - 0.008
		150 - 200	300 - 800	–	–	0.003 - 0.0055	0.003 - 0.007	0.003 - 0.008	0.003 - 0.008
		200 - 220	300 - 500	–	–	0.003 - 0.0055	0.003 - 0.007	0.003 - 0.008	0.003 - 0.008
		220 - 260	270 - 400	–	–	0.003 - 0.0055	0.003 - 0.007	0.003 - 0.008	0.003 - 0.008
		260 - 320	270 - 400	–	–	0.003 - 0.0055	0.003 - 0.007	0.003 - 0.008	0.003 - 0.008
N	**Cast Aluminum**	30	–	–	800 - 2000	0.0025 - 0.005	0.003 - 0.0055	0.003 - 0.0065	0.003 - 0.008
		180	–	–	800 - 2000	0.0025 - 0.005	0.003 - 0.0055	0.003 - 0.0065	0.003 - 0.008
	Wrought Aluminum	30	–	–	800 - 2000	0.0025 - 0.005	0.003 - 0.0055	0.003 - 0.0065	0.003 - 0.008
		180	–	–	800 - 2000	0.0025 - 0.005	0.003 - 0.0055	0.003 - 0.0065	0.003 - 0.008
	Aluminum Bronze	100 - 200	500 - 1000	–	500 - 1000	0.0025 - 0.005	0.003 - 0.0055	0.003 - 0.0065	0.003 - 0.008
		200 - 250	500 - 1000	–	500 - 1000	0.0025 - 0.005	0.003 - 0.0055	0.003 - 0.0065	0.003 - 0.008
	Brass	100	500 - 1000	–	500 - 1000	0.0025 - 0.005	0.003 - 0.0055	0.003 - 0.0065	0.003 - 0.008
	Copper	60	–	–	500 - 1000	0.0025 - 0.005	0.003 - 0.0055	0.003 - 0.0065	0.003 - 0.008

*For high-temp materials, 1000 PSI is recommended as well as a quality synthetic coolant at approximately 10% emulsion.
**For 4xD tools, begin at low end of feed recommendation.

IMPORTANT: The speeds and feeds listed above are a general starting point for all applications. Factory technical assistance is also available through our Application Engineering Team. *ext:* **7611** | *email:* **appeng@alliedmachine.com**

Recommended Drilling Data | Metric (mm)

ISO	Material	Hardness (BHN)	Speed (m/min) P K H AM480	Speed (m/min) M AM485	Speed (m/min) N TiCN	Feed Rate (mm/rev) by Diameter - 2xD, 3xD** 03, 04 Series (12.00 mm - 15.49 mm)	05 Series (15.50 mm - 18.49 mm)	06, 07 Series (18.50 mm - 26.49 mm)	09, 11, 14 Series (26.50 mm - 47.00 mm)
P	**Free-Machining Steel** 1118, 1215, 12L14, etc.	100 - 150	125 - 365	125 - 365	–	0.07 - 0.1	0.07 - 0.12	0.08 - 0.14	0.08 - 0.14
		150 - 200	125 - 305	125 - 305	–	0.07 - 0.1	0.07 - 0.12	0.08 - 0.14	0.08 - 0.14
		200 - 250	125 - 245	125 - 245	–	0.07 - 0.1	0.07 - 0.12	0.08 - 0.14	0.08 - 0.14
	Low-Carbon Steel 1010, 1020, 1025, 1522, 1144, etc.	85 - 125	125 - 305	125 - 305	–	0.07 - 0.1	0.07 - 0.12	0.08 - 0.14	0.08 - 0.14
		125 - 175	125 -305	125 - 305	–	0.07 - 0.1	0.07 - 0.12	0.08 - 0.14	0.08 - 0.14
		175 - 225	125 - 245	125 - 245	–	0.07 - 0.1	0.07 - 0.12	0.08 - 0.14	0.08 - 0.14
		225 - 275	125 - 245	125 - 245	–	0.07 - 0.1	0.07 - 0.12	0.08 - 0.14	0.08 - 0.14
	Medium-Carbon Steel 1030, 1040, 1050, 1527, 1140, 1151, etc.	125 - 175	100 - 245	100 - 245	–	0.05 - 0.14	0.07 - 0.17	0.08 - 0.21	0.08 - 0.21
		175 - 225	100 - 245	100 - 245	–	0.05 - 0.14	0.07 - 0.17	0.08 - 0.21	0.08 - 0.21
		225 - 275	100 - 245	100 - 245	–	0.05 - 0.14	0.07 - 0.17	0.08 - 0.21	0.08 - 0.21
		275 - 325	100 - 245	100 - 185	–	0.05 - 0.14	0.07 - 0.17	0.08 - 0.21	0.08 - 0.21
	Alloy Steel 4140, 5140, 8640, etc.	125 - 175	100 - 245	–	–	0.05 - 0.14	0.07 - 0.17	0.08 - 0.21	0.08 - 0.21
		175 - 225	100 - 245	–	–	0.05 - 0.14	0.07 - 0.17	0.08 - 0.21	0.08 - 0.21
		225 - 275	100 - 245	–	–	0.05 - 0.14	0.07 - 0.17	0.08 - 0.21	0.08 - 0.21
		275 - 325	100 - 245	–	–	0.05 - 0.14	0.07 - 0.17	0.08 - 0.21	0.08 - 0.21
		325 - 375	100 - 245	–	–	0.05 - 0.14	0.07 - 0.17	0.08 - 0.21	0.08 - 0.21
	High-Strength Alloy 4340, 4330V, 300M, etc.	225 - 300	100 - 165	–	–	0.05 - 0.14	0.07 - 0.17	0.08 - 0.21	0.08 - 0.21
		300 - 350	100 - 185	–	–	0.05 - 0.14	0.07 - 0.17	0.08 - 0.21	0.08 - 0.21
		350 - 400	100 - 185	–	–	0.05 - 0.14	0.07 - 0.17	0.08 - 0.21	0.08 - 0.21
	Structural Steel A36, A285, A516, etc.	100 - 150	100 - 185	100 - 185	–	0.05 - 0.13	0.07 - 0.13	0.08 - 0.13	0.08 - 0.13
		150 - 250	100 - 185	100 - 185	–	0.05 - 0.13	0.07 - 0.13	0.08 - 0.13	0.08 - 0.13
		250 - 350	100 - 185	–	–	0.05 - 0.13	0.07 - 0.13	0.08 - 0.13	0.08 - 0.13
	Tool Steel H-13, H-21, A-4, 0-2, S-3, etc.	150 - 200	85 - 185	85 - 185	–	0.05 - 0.08	0.07 - 0.12	0.08 - 0.15	0.08 - 0.15
		200 - 250	85 - 185	–	–	0.05 - 0.08	0.07 - 0.12	0.08 - 0.15	0.08 - 0.15
S	**High-Temp Alloy*** Hastelloy B, Inconel 600, etc.	140 - 220	30 - 80	30 - 80	–	0.06 - 0.08	0.06 - 0.08	0.07 - 0.1	0.07 - 0.1
		220 - 310	30 - 60	30 - 60	–	0.06 - 0.08	0.06 - 0.08	0.07 - 0.1	0.07 - 0.1
	Titanium Alloy*	140 - 220	40 - 155	40 - 155	–	0.06 - 0.08	0.06 - 0.08	0.07 - 0.1	0.07 - 0.1
		220 - 310	40 - 90	40 - 90	–	0.06 - 0.08	0.06 - 0.08	0.07 - 0.1	0.07 - 0.1
	Aerospace Alloy* S82	185 - 275	30 - 80	30 - 80	–	0.06 - 0.08	0.06 - 0.08	0.07 - 0.1	0.07 - 0.1
		275 - 350	30 - 60	31 - 60	–	0.06 - 0.08	0.06 - 0.08	0.07 - 0.1	0.07 - 0.1
M	**Stainless Steel 400 Series** 416, 420, etc.	185 - 275	75 - 185	75 - 215	–	0.05 - 0.1	0.07 - 0.12	0.07 - 0.14	0.07 - 0.14
		275 - 350	75 - 145	75 - 155	–	0.05 - 0.1	0.07 - 0.12	0.07 - 0.14	0.07 - 0.14
	Stainless Steel 300 Series 304, 316, 17-4PH, etc.	135 - 185	75 - 185	75 - 215	–	0.05 - 0.1	0.07 - 0.12	0.07 - 0.14	0.07 - 0.14
		185 - 275	75 - 145	75 - 155	–	0.05 - 0.1	0.07 - 0.12	0.07 - 0.14	0.07 - 0.14
	Super Duplex Stainless Steel	135 - 185	75 - 185	75 - 215	–	0.05 - 0.1	0.07 - 0.12	0.07 - 0.14	0.07 - 0.14
		185 - 275	75 - 145	75 - 155	–	0.05 - 0.1	0.07 - 0.12	0.07 - 0.14	0.07 - 0.14
H	**Wear Plate** Hardox, AR400, T-1, etc.	400	30 - 60	–	–	0.05 - 0.08	0.07 - 0.12	0.08 - 0.15	0.08 - 0.15
		500	30 - 60	–	–	0.05 - 0.08	0.07 - 0.12	0.08 - 0.15	0.08 - 0.15
		600	30 - 60	–	–	0.05 - 0.08	0.07 - 0.12	0.08 - 0.15	0.08 - 0.15
	Hardened Steel	300 - 400	30 - 90	–	–	0.05 - 0.08	0.07 - 0.12	0.08 - 0.15	0.08 - 0.15
		400 - 500	30 - 60	–	–	0.05 - 0.08	0.07 - 0.12	0.08 - 0.15	0.08 - 0.15
K	**Nodular, Grey, Ductile Cast Iron**	120 - 150	90 - 245	–	–	0.08 - 0.14	0.08 - 0.19	0.08 - 0.21	0.08 - 0.21
		150 - 200	90 - 245	–	–	0.08 - 0.14	0.08 - 0.19	0.08 - 0.21	0.08 - 0.21
		200 - 220	90 - 155	–	–	0.08 - 0.14	0.08 - 0.19	0.08 - 0.21	0.08 - 0.21
		220 - 260	80 - 125	–	–	0.08 - 0.14	0.08 - 0.19	0.08 - 0.21	0.08 - 0.21
		260 - 320	80 - 125	–	–	0.08 - 0.14	0.08 - 0.19	0.08 - 0.21	0.08 - 0.21
N	**Cast Aluminum**	30	–	–	245 - 610	0.07 - 0.12	0.08 - 0.14	0.08 - 0.17	0.08 - 0.21
		180	–	–	245 - 610	0.07 - 0.12	0.08 - 0.14	0.08 - 0.17	0.08 - 0.21
	Wrought Aluminum	30	–	–	245 - 610	0.07 - 0.12	0.08 - 0.14	0.08 - 0.17	0.08 - 0.21
		180	–	–	245 - 610	0.07 - 0.12	0.08 - 0.14	0.08 - 0.17	0.08 - 0.21
	Aluminum Bronze	100 - 200	150 - 305	–	150 - 305	0.07 - 0.12	0.08 - 0.14	0.08 - 0.17	0.08 - 0.21
		200 - 250	150 - 305	–	150 - 305	0.07 - 0.12	0.08 - 0.14	0.08 - 0.17	0.08 - 0.21
	Brass	100	150 - 305	–	150 - 305	0.07 - 0.12	0.08 - 0.14	0.08 - 0.17	0.08 - 0.21
	Copper	60	–	–	150 - 305	0.07 - 0.12	0.08 - 0.14	0.08 - 0.17	0.08 - 0.21

*For high-temp materials, 70 bar is recommended as well as a quality synthetic coolant at approximately 10% emulsion.
**For 4xD tools, begin at low end of feed recommendation.

IMPORTANT: The speeds and feeds listed above are a general starting point for all applications. Factory technical assistance is also available through our Application Engineering Team.
ext: **7611** | *email:* **appeng@alliedmachine.com**

Insert Geometry Recommendations

ISO	Material	Hardness (BHN)	Geometry P	M	K	N	H
P	**Free-Machining Steel** 1118, 1215, 12L14, etc.	100 - 150	○	●			
		150 - 200	●	○			
		200 - 250	●	○			
	Low-Carbon Steel 1010, 1020, 1025, 1522, 1144, etc.	85 - 125	○	●			
		125 - 175	○	●			
		175 - 225	○	●			
		225 - 275	●	○			
	Medium-Carbon Steel 1030, 1040, 1050, 1527, 1140, 1151, etc.	125 - 175	○	●			
		175 - 225	○	●			
		225 - 275	●	○			
		275 - 325	●				○
	Alloy Steel 4140, 5140, 8640, etc.	125 - 175	○	●			
		175 - 225	●	○			
		225 - 275	●				○
		275 - 325	●				○
		325 - 375	○				●
	High-Strength Alloy 4340, 4330V, 300M, etc.	225 - 300	●				
		300 - 350	○				●
		350 - 400	○				●
	Structural Steel A36, A285, A516, etc.	100 - 150	○	●			
		150 - 250	○	●			
		250 - 350	●				○
	Tool Steel H-13, H-21, A-4, 0-2, S-3, etc.	150 - 200	●	○			
		200 - 250	●				○
S	**High-Temp Alloy*** Hastelloy B, Inconel 600, etc.	140 - 220	○	●			
		220 - 310	○	●			
	Titanium Alloy*	140 - 220	○	●			
		220 - 310	○	●			
	Aerospace Alloy* S82	185 - 275	○	●			
		275 - 350	○	●			
M	**Stainless Steel 400 Series** 416, 420, etc.	185 - 275	○	●			
		275 - 350	○	●			
	Stainless Steel 300 Series 304, 316, 17-4PH, etc.	135 - 185	○	●			
		185 - 275	○	●			
	Super Duplex Stainless Steel		○	●			
		135 - 275	○	●			
H	**Wear Plate** Hardox, AR400, T-1, etc.	400	○				●
		500	○				●
		600	○				●
	Hardened Steel	300 - 400	○				●
		400 - 500	○				●
K	**Nodular, Ductile Cast Iron**	120 - 150	●	○			
		150 - 200	●	○			
		200 - 220	●	○			
		220 - 260			●		○
		260 - 320			●		○
	Grey / White Iron	120 - 150			●		○
		150 - 200			●		○
		200 - 220			●		
		220 - 260			●		
		260 - 320			●		
N	**Cast Aluminum**	30				●	
		180				●	
	Wrought Aluminum	30				●	
		180				●	
	Aluminum Bronze	100 - 200	○			●	
		200 - 250	○			●	
	Brass	100	○			●	
	Copper	60				●	

Troubleshooting

1. 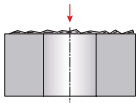

Starting on Uneven Surfaces
- Reduce entry feed by 50% if necessary.

2. 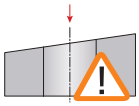

Starting on Angled Surfaces
- Reduce entry feed by 20 - 50%.
- Use lower rake geometry if insert chipping occurs.

3. 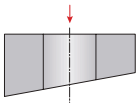

Angled Bore Exit
- Reduce entry feed by 50% on breakout.
- Use tough insert and stable corner radius.

4. 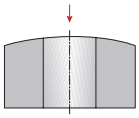

Starting on Convex Surfaces
- Reduce entry feed by 50%.
- Use lower rake geometry if insert chipping occurs.

5. 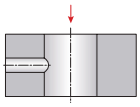

Drilling Through a Cross Hole
- Reduce feed rate 50% if necessary.
- Use good coolant flow and monitor chip packing.
- Use lower rake geometry if insert chipping occurs.

6. 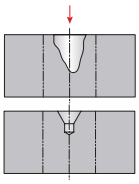

Drilling on a Groove or Large Centering Box
- Reduce entry feed.
- Use lower rake geometry for center insert.

7. 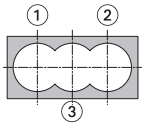

Chain Drilling
- Use good coolant flow
- Reduce feed rate by 50% for interrupted cut.
- Use lower rake geometry if insert chipping occurs.

8. 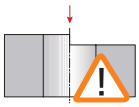

Starting on an Edge
- Reduce entry feed rate by 50%.
- Use lower rake geometry if insert chipping occurs.

9. 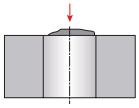

Starting on a Welded Seam
- Reduce entry feed rate by 50%.
- Use lower rake geometry if insert chipping occurs.

10. 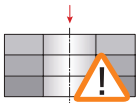

Drilling Through Stacked Plates
- Not recommended.

11. 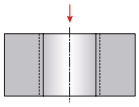

Opening an Existing Hole
- Use flood coolant.

12. 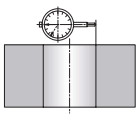

Adjustable
- For mills, use eccentric sleeve with end mill holder.
- For lathes, use x-axis to adjust offset Ø.

NOTE: Refer to maximum offset Ø in data tables.

SECTION

A60

Revolution Drill®

Revolution Drill®

Large Diameter Replaceable IC Insert Drilling System

- **Diameter Range:** 1.875" - 4.000" (47.63 mm - 101.60 mm)

Large Scale Innovation

The Revolution Drill has an innovative design that allows for adjustability of 0.200" (5.10 mm) on diameter. This eliminates the need for special tooling and/or subsequent boring operations. With the ability to drill from solid, the Revolution Drill does not require a previously drilled pilot hole. The replaceable cartridges reduce setup time, and the indexable inserts protect your investment. The insert design provides excellent chip control and aggressive penetration rates.

Drills from solid.	Drill depths up to 4.5xD.	Excellent chip control.

Applicable Industries

Aerospace · Agriculture · Automotive · Firearms · General Machining · Oil & Gas · Renewable Energy

Your safety and the safety of others is very important. This catalog contains important safety messages. Always read and follow all safety precautions.

This triangle is a safety hazard symbol. It alerts you to potential safety hazards that can cause tool failure and serious injury.

When you see this symbol in the catalog, look for a related safety message that may be near this triangle or referred to in the nearby text.

There are safety signal words also used in the catalog. Safety messages follow these words.

WARNING

WARNING (shown above) means that failure to follow the precautions in this message could result in tool failure and serious injury.

NOTICE means that failure to follow the precautions in this message could result in damage to the tool or machine but not result in personal injury.

NOTE and **IMPORTANT** are also used. These are important that you read and follow but are not safety-related.

Visit www.alliedmachine.com for the most up-to-date information and procedures.

Reference Icons
The following icons will appear throughout the catalog to help you navigate between products.

Setup / Assembly Information
Detailed instructions and information regarding the corresponding part(s)

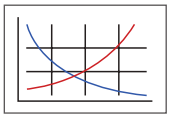

Recommended Cutting Data
Speed and feed recommendations for optimum and safe drilling

Coolant-Through Option
Indicates that the product is coolant through

Series	Diameter Range	
	Imperial (inch)	Metric (mm)
34	1.875 - 2.000	47.63 - 50.80
36	2.000 - 2.200	50.80 - 55.88
38	2.200 - 2.400	55.88 - 60.96
42	2.400 - 2.600	60.96 - 66.04
44	2.600 - 2.800	66.04 - 71.12
46	2.800 - 3.000	71.12 - 76.20
48	3.000 - 3.200	76.20 - 81.28
52	3.200 - 3.400	81.28 - 86.36
54	3.400 - 3.600	86.36 - 91.44
56	3.600 - 3.800	91.44 - 96.52
58	3.800 - 4.000	96.52 - 101.60

Revolution Drill® Contents

Introduction Information

Product Overview . . . . . 2 - 3
Setup Instructions 4
Product Nomenclature 5

Drill Series

34 Series . . . . . 6 - 7
36 Series . . . . . 8 - 9
38 Series . . . . . 10 - 11
42 Series . . . . . 12 - 13
44 Series . . . . . 14 - 15
46 Series . . . . . 16 - 17
48 Series . . . . . 18 - 19
52 Series . . . . . 20 - 21
54 Series . . . . . 22 - 23
56 Series . . . . . 24 - 25
58 Series . . . . . 26 - 27

Recommended Cutting Data

Imperial (inch) 28
Metric (mm) 29

Product Overview

Series	Diameter Range		Length-to-Diameter Ratio	Shank Options			Inserts per Cartridge	Page
	Imperial (in)	Metric (mm)		Straight	CAT40	CAT50		
34	1.875 - 2.000	47.63 - 50.80	2.2, 3.5, 4.5	✓	✓	✓	2	6 - 7
36	2.000 - 2.200	50.80 - 55.88	2.2, 3.5, 4.5	✓	✓	✓	2	8 - 9
38	2.200 - 2.400	55.88 - 60.96	2.2, 3.5, 4.5	✓	✓	✓	2	10 - 11
42	2.400 - 2.600	60.96 - 66.00	2.2, 3.5, 4.5	✓	✓	✓	2	12 - 13
44	2.600 - 2.800	66.00 - 71.12	2.2, 3.5	✓		✓	3	14
46	2.800 - 3.000	71.12 - 76.20	2.2, 3.5	✓		✓	3	15
48	3.000 - 3.200	76.20 - 81.28	1.0, 2.5	✓		✓	3	16
52	3.200 - 3.400	81.28 - 86.36	1.0, 2.5	✓		✓	3	17
54	3.400 - 3.600	86.36 - 91.44	1.0, 2.5	✓		✓	3	18
56	3.600 - 3.800	91.44 - 96.52	1.0, 2.5	✓		✓	4	19
58	3.800 - 4.000	96.52 - 101.60	1.0, 2.5	✓		✓	4	20

NOTE: Stacked plate styles are also available.

Features & Benefits

- Adjustability of 0.200" (5.10 mm) on diameter.
- Drill depths up to 4.5xD (standard).
- The replaceable cartridges protect your investment.
- Adjustable diameter reduces inventory and cost.
- The insert design allows for excellent chip control and aggressive penetration rates.
- No pilot hole needed.

2 Inserts
(34 - 42 series)

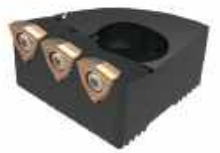

3 Inserts
(44 - 54 series)

4 Inserts
(56 - 58 series)

Shank Options

Straight Shank
(all series)

CAT40 Shank
(34, 36, 38, 42 series)

CAT50 Shank
(all series)

Body Lengths

- 1.0xD (48, 52, 54, 56, 58 series)
- 2.2xD (34, 36, 38, 42, 44, 46 series)
- 2.5xD (48, 52, 54, 56, 58 series)
- 3.5xD (34, 36, 38, 42, 44, 46 series)
- 4.5xD (34, 36, 38, 42, 44, 46 series)

Product Overview

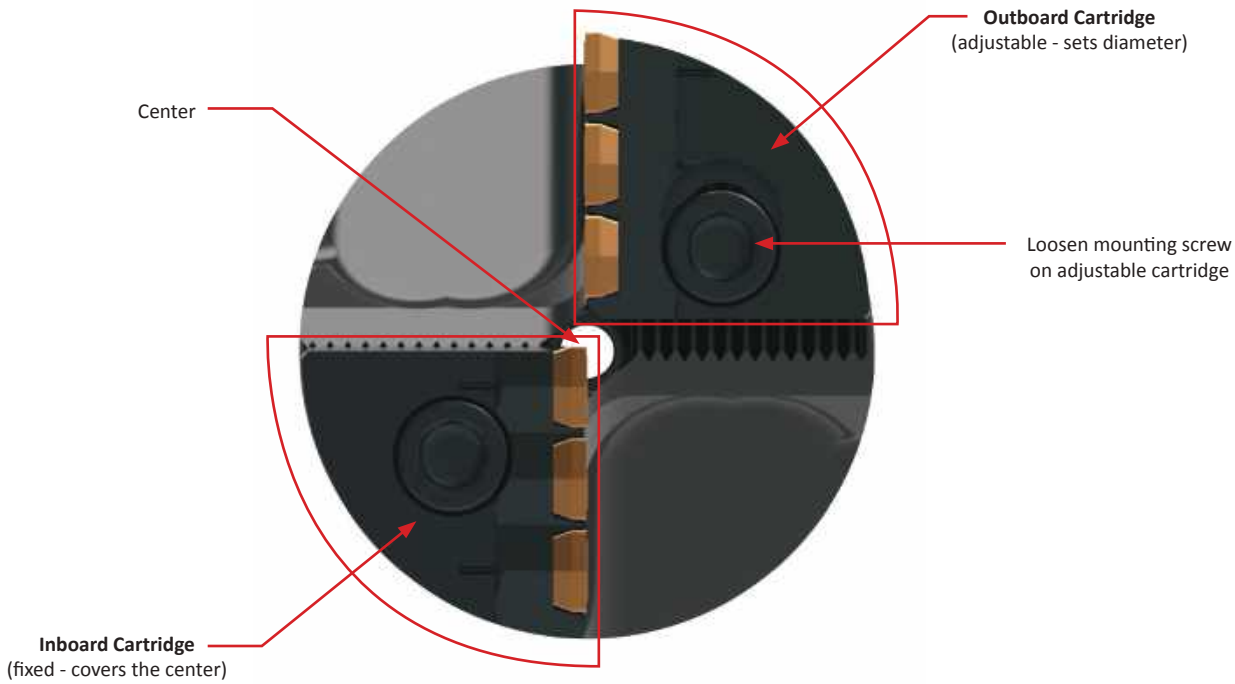

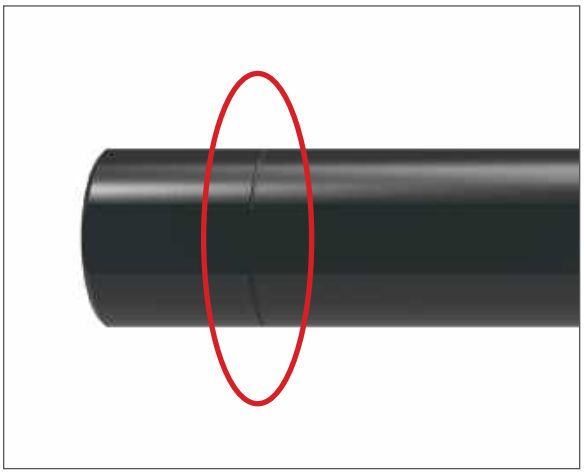

Straight Shanks

- Designed for lathe applications.
- Can be cut off for use in end mill holders.
- The score mark (circled above) is provided for recommended cut length.
- Cut and deburr at the score mark.
- This improves rigidity when the body sits against the face of an end mill holder.

Setup Instructions

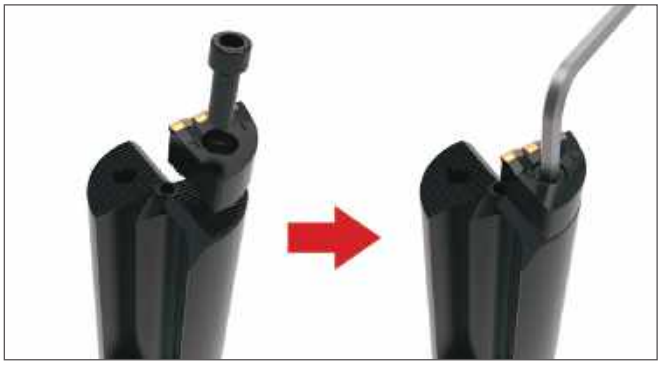

Step 1:
Mount the fixed cartridge and tighten the mounting screw to 11-14 ft-lbf (15-19 N-m).

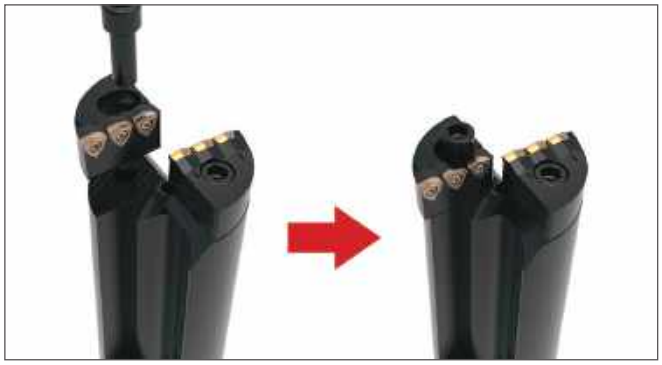

Step 2:
Finger-tighten the mounting screw on the adjustable cartridge.

Step 3:
Set the diameter using the adjustment screw against the mounting screw. Place the drill in a presetter to ensure the correct diameter setting.

Step 4:
Tighten the mounting screw to 11-14 ft-lbf (15-19 N-m).

IC Inserts

- The design allows for excellent chip control and aggressive penetration rates.
- The proprietary AM200® and AM300® coatings increase tool life above competitors' premium coatings.
- The same inserts are used for both Revolution Drill® and Opening Drill® products.

AM300®

AM200®

TiN

Insert Application Recommendations

Carbide Grade Options	
C5 (P35)	General purpose carbide grade suitable for most applications. ▶ *Common application in steels and stainless steels.*
C1 (K35)	Toughest carbide grade. Provides the best combination of edge strength and tool life. ▶ *Recommended for less rigid applications.*
C2 (K25)	Higher wear-resistant carbide suitable for abrasive material applications. ▶ *Recommended for grey, ductile, and nodular irons.*
Additional Geometry Option	
High Rake (HR)	Provides superior chip control and tool life in long chipping carbon and alloy steels below 200 BHN.

Product Nomenclature

Revolution Drill Holders

R	34	X	22	–	150L
1	2		3		4

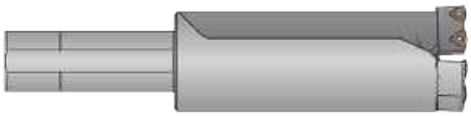

1. Drill Style	2. Series			3. Length-to-Diameter Ratio	4. Shank Information
R = Standard	**34** = 34 series	**44** = 44 series	**54** = 54 series	**10** = 1.0xD	**150L** = 1-1/2 Ø straight
SP = Stacked Plate	**36** = 36 series	**46** = 46 series	**56** = 56 series	**22** = 2.2xD	**200L** = 2 Ø straight
	38 = 38 series	**48** = 48 series	**58** = 58 series	**25** = 2.5xD	**40M** = 40 mm ISO 9766
	42 = 42 series	**52** = 52 series		**35** = 3.5xD	**50M** = 50 mm ISO 9766
				45 = 4.5xD	**CV40** = CAT40
					CV50 = CAT50

Revolution Drill Inserts

OP	–	05	T3	08	–	1	H	HR
1		2	3	4		5	6	7

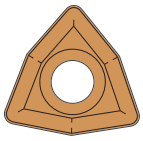

1. Compatible with:	2. IC Type	3. Thickness	4. Radius	5. Carbide Grade
Opening Drill®	**05** = 5/16"	**T3** = 5/32"	**08** = 1/32"	**Blank** = C5 (P35)
Revolution Drill®				**1** = C1 (K35)
				2 = C2 (K25)

6. Coating	7. Geometry
P = AM300®	**Blank** = General Purpose
H = AM200®	**HR** = High Rake
T = TiN	
A = TiAlN	
N = TiCN	
U = Uncoated	

Reference Key

Symbol	Attribute
D_1	Drill diameter range
D_2	Shank diameter
L_1	Overall length
L_2	Maximum drill depth
L_4	Holder length
L_7	Shank length
P_1	Rear pipe tap

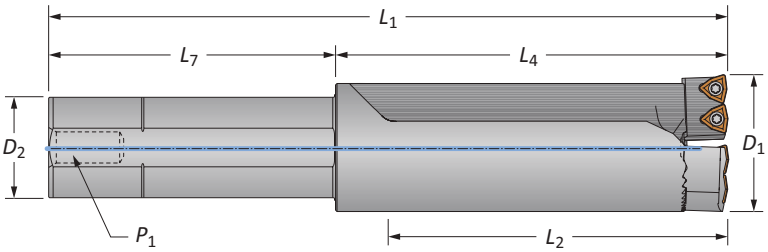

Revolution Drill Holders

34 Series | Diameter Range: 1.875" - 2.000" (47.63 mm - 50.80 mm)

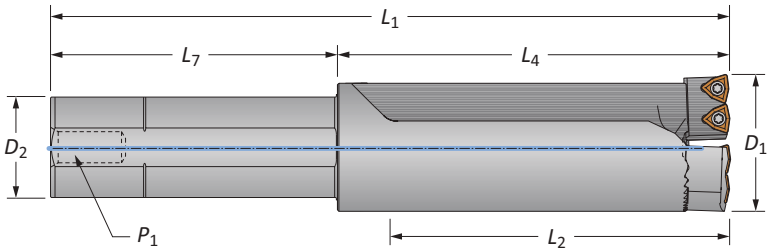

Straight Shank Imperial

	Style	Length	D_1 Range	Holder L_2	Holder L_4	Holder L_1	Shank D_2	Shank L_7	Shank P_1	Part No.*	Cartridges
i	Standard	2.2xD	1.875 - 2.000	4-17/32	5-13/32	9-13/32	1-1/2	4	1/4	**R34X22-150L**	C34-...
	Standard	3.5xD	1.875 - 2.000	7-1/32	7-29/32	11-29/32	1-1/2	4	1/4	**R34X35-150L**	C34-...
	Standard	4.5xD	1.875 - 2.000	9-1/32	9-29/32	13-29/32	1-1/2	4	1/4	**R34X45-150L**	C34-...
	Stacked Plate	2.2xD	1.875 - 2.000	4-27/64	5-5/16	9-5/16	1-1/2	4	1/4	**SP34X22-150L**	C34SP-...

*Holder includes cartridges; however, inserts are sold separately.

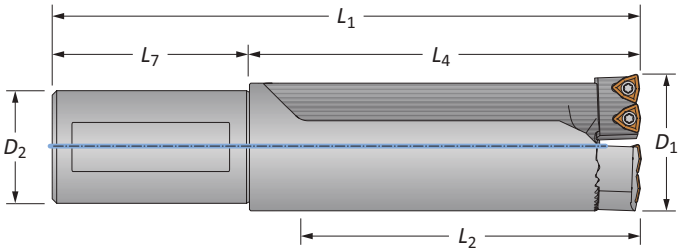

Straight Shank Metric

	Style	Length	D_1 Range	Holder L_2	Holder L_4	Holder L_1	Shank D_2	Shank L_7	Shank P_1	Part No.*	Cartridges
m	Standard	2.2xD	47.63 - 50.80	114.94	137.36	207.36	40.00	70.00	–	**R34X22-40M**	C34-...
	Standard	3.5xD	47.63 - 50.80	178.44	200.86	270.86	40.00	70.00	–	**R34X35-40M**	C34-...
	Standard	4.5xD	47.63 - 50.80	229.24	251.66	321.66	40.00	70.00	–	**R34X45-40M**	C34-...
	Stacked Plate	2.2xD	47.63 - 50.80	112.40	134.80	204.80	40.00	70.00	–	**SP34X22-40M**	C34SP-...

*Holder includes cartridges; however, inserts are sold separately.

A60: 28 - 29
Key on A60: 1
A60: 2 - 4

i = Imperial (in)
m = Metric (mm)

Revolution Drill Holders

34 Series | Diameter Range: 1.875" - 2.000" (47.63 mm - 50.80 mm)

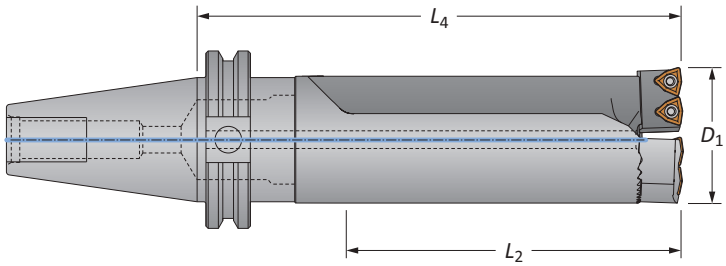

CV40 Shank

	Style	Length	D_1 Range	Holder L_2	Holder L_4	Shank	Part No.*	Cartridges
i	Standard	2.2xD	1.875 - 2.000	4-17/32	6-25/32	CV40	**R34X22-CV40**	C34-...
i	Standard	3.5xD	1.875 - 2.000	7-1/32	9-9/32	CV40	**R34X35-CV40**	C34-...
i	Standard	4.5xD	1.875 - 2.000	9-1/32	11-9/32	CV40	**R34X45-CV40**	C34-...
	Stacked Plate	2.2xD	1.875 - 2.000	4-27/64	6-11/16	CV40	**SP34X22-CV40**	C34SP-...

*Holder includes cartridges; however, inserts are sold separately.

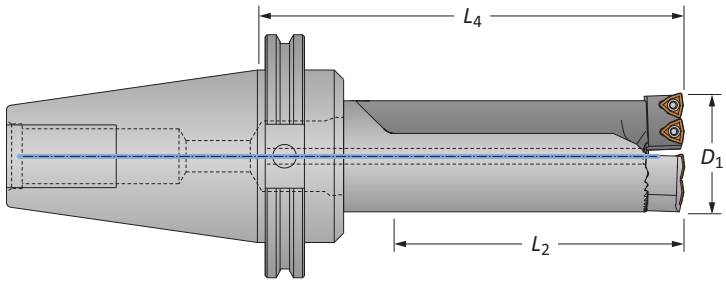

CV50 Shank

	Style	Length	D_1 Range	Holder L_2	Holder L_4	Shank	Part No.*	Cartridges
i	Standard	2.2xD	1.875 - 2.000	4-17/32	6-25/32	CV50	**R34X22-CV50**	C34-...
i	Standard	3.5xD	1.875 - 2.000	7-1/32	9-9/32	CV50	**R34X35-CV50**	C34-...
i	Standard	4.5xD	1.875 - 2.000	9-1/32	11-9/32	CV50	**R34X45-CV50**	C34-...
	Stacked Plate	2.2xD	1.875 - 2.000	4-27/64	6-11/16	CV50	**SP34X22-CV50**	C34SP-...

*Holder includes cartridges; however, inserts are sold separately.

Cartridges

Holder Part No.	Replacement Cartridges	Qty. Inserts Needed	Mounting Screw	Key Size	Adjusting Screw	Driver
R34...	**C34-FIX**	2	MS-17M-1	5 mm	AS-16T9-1	8T-9
	C34-ADJ	2	MS-17M-1	5 mm	AS-16T9-1	8T-9
SP34...	**C34SP-FIX**	2	MS-17M-1	5 mm	AS-16T9-1	8T-9
	C34SP-ADJ	2	MS-17M-1	5 mm	AS-16T9-1	8T-9

IC Inserts

Carbide Grade	Geometry	Part No. AM300®	Part No. AM200®	Part No. TiN	Insert Screws*	Driver
C5 (P35)	Standard	**OP-05T308-P**	**OP-05T308-H**	**OP-05T308-T**	IS-10-1	8T-9
C1 (K35)	Standard	**OP-05T308-1P**	**OP-05T308-1H**	**OP-05T308-1T**	IS-10-1	8T-9
C2 (K25)	Standard	**OP-05T308-2P**	**OP-05T308-2H**	–	IS-10-1	8T-9
C5 (P35)	High Rake	**OP-05T308-PHR**	**OP-05T308-HHR**	–	IS-10-1	8T-9

*Admissible Tightening Torque: 15.5 in-lbs (175 N-cm). Tightening torques are calculated with a friction coefficient of μ = 0.14 and develop 90% of ultimate yield strength.

A60: 28 - 29
Key on A60: 1
A60: 2 - 4

Mounting screws sold in multiples of 4 | Adjusting screws sold in multiples of 4
IC inserts sold in multiples of 10 | Insert screws sold in multiples of 10

i = Imperial (in)
m = Metric (mm)

Revolution Drill Holders

36 Series | Diameter Range: 2.000" - 2.200" (50.80 mm - 55.88 mm)

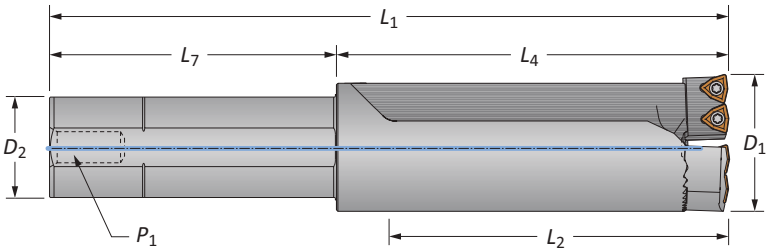

Straight Shank Imperial

	Style	Length	D_1 Range	Holder L_2	Holder L_4	Holder L_1	Shank D_2	Shank L_7	Shank P_1	Part No.*	Cartridges
i	Standard	2.2xD	2.000 - 2.200	4-61/64	5-57/64	9-57/64	1-1/2	4	1/4	**R36X22-150L**	C36-...
	Standard	3.5xD	2.000 - 2.200	7-45/64	8-41/64	12-41/64	1-1/2	4	1/4	**R36X35-150L**	C36-...
	Standard	4.5xD	2.000 - 2.200	9-61/64	10-57/64	14-57/64	1-1/2	4	1/4	**R36X45-150L**	C36-...
	Stacked Plate	2.2xD	2.000 - 2.200	4-57/64	5-13/16	9-13/16	1-1/2	4	1/4	**SP36X22-150L**	C36SP-...

*Holder includes cartridges; however, inserts are sold separately.

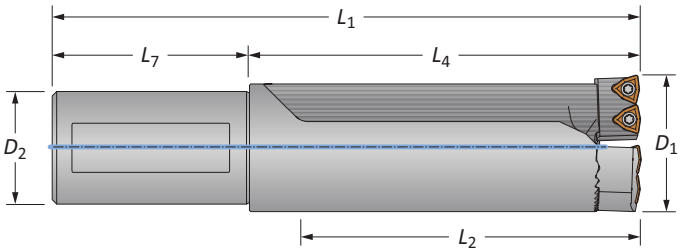

Straight Shank Metric

	Style	Length	D_1 Range	Holder L_2	Holder L_4	Holder L_1	Shank D_2	Shank L_7	Shank P_1	Part No.*	Cartridges
m	Standard	2.2xD	50.80 - 55.88	125.96	149.58	219.58	40.00	70.00	–	**R36X22-40M**	C36-...
	Standard	3.5xD	50.80 - 55.88	195.81	219.43	289.43	40.00	70.00	–	**R36X35-40M**	C36-...
	Standard	4.5xD	50.80 - 55.88	252.96	276.58	346.58	40.00	70.00	–	**R36X45-40M**	C36-...
	Stacked Plate	2.2xD	50.80 - 55.88	125.96	147.60	217.60	40.00	70.00	–	**SP36X22-40M**	C36SP-...

*Holder includes cartridges; however, inserts are sold separately.

A60: 28 - 29
Key on A60: 1
A60: 2 - 4

i = Imperial (in)
m = Metric (mm)

Revolution Drill Holders

36 Series | Diameter Range: 2.000" - 2.200" (50.80 mm - 55.88 mm)

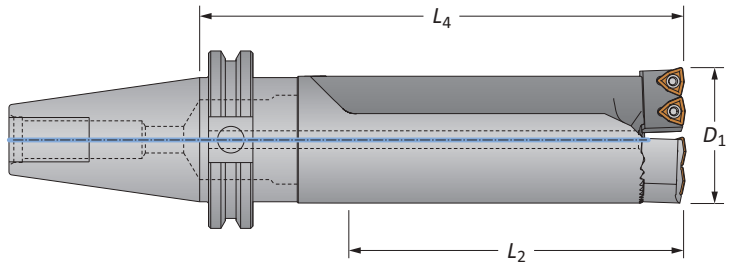

CV40 Shank

	Style	Length	D_1 Range	Holder L_2	Holder L_4	Shank	Part No.*	Cartridges
i	Standard	2.2xD	2.000 - 2.200	4-61/64	7-17/64	CV40	**R36X22-CV40**	C36-...
i	Standard	3.5xD	2.000 - 2.200	7-45/64	10-1/64	CV40	**R36X35-CV40**	C36-...
i	Standard	4.5xD	2.000 - 2.200	9-61/64	12-17/64	CV40	**R36X45-CV40**	C36-...
	Stacked Plate	2.2xD	2.000 - 2.200	4-57/64	7-35/64	CV40	**SP36X22-CV40**	C36SP-...

*Holder includes cartridges; however, inserts are sold separately.

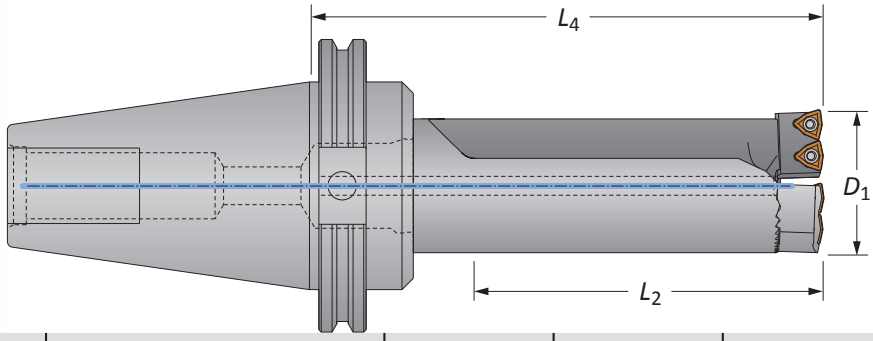

CV50 Shank

	Style	Length	D_1 Range	Holder L_2	Holder L_4	Shank	Part No.*	Cartridges
i	Standard	2.2xD	2.000 - 2.200	4-61/64	7-17/64	CV50	**R36X22-CV50**	C36-...
i	Standard	3.5xD	2.000 - 2.200	7-45/64	10-1/64	CV50	**R36X35-CV50**	C36-...
i	Standard	4.5xD	2.000 - 2.200	9-61/64	12-17/64	CV50	**R36X45-CV50**	C36-...
	Stacked Plate	2.2xD	2.000 - 2.200	4-57/64	7-35/64	CV50	**SP36X22-CV50**	C36SP-...

*Holder includes cartridges; however, inserts are sold separately.

Cartridges

Holder Part No.	Replacement Cartridges	Qty. Inserts Needed	Mounting Screw	Key Size	Adjusting Screw	Driver
R36...	**C36-FIX**	2	MS-17M-1	5 mm	AS-18T9-1	8T-9
	C36-ADJ	2	MS-17M-1	5 mm	AS-18T9-1	8T-9
SP36...	**C36SP-FIX**	2	MS-17M-1	5 mm	AS-18T9-1	8T-9
	C36SP-ADJ	2	MS-17M-1	5 mm	AS-18T9-1	8T-9

IC Inserts

Carbide Grade	Geometry	Part No. AM300®	Part No. AM200®	Part No. TiN	Insert Screws*	Driver
C5 (P35)	Standard	**OP-05T308-P**	**OP-05T308-H**	**OP-05T308-T**	IS-10-1	8T-9
C1 (K35)	Standard	**OP-05T308-1P**	**OP-05T308-1H**	**OP-05T308-1T**	IS-10-1	8T-9
C2 (K25)	Standard	**OP-05T308-2P**	**OP-05T308-2H**	–	IS-10-1	8T-9
C5 (P35)	High Rake	**OP-05T308-PHR**	**OP-05T308-HHR**	–	IS-10-1	8T-9

*Admissible Tightening Torque: 15.5 in-lbs (175 N-cm). Tightening torques are calculated with a friction coefficient of μ = 0.14 and develop 90% of ultimate yield strength.

A60: 28 - 29
Key on A60: 1
A60: 2 - 4

Mounting screws sold in multiples of 4 | Adjusting screws sold in multiples of 4
IC inserts sold in multiples of 10 | Insert screws sold in multiples of 10

i = Imperial (in)
m = Metric (mm)

Revolution Drill Holders

38 Series | Diameter Range: 2.200" - 2.400" (55.88 mm - 60.96 mm)

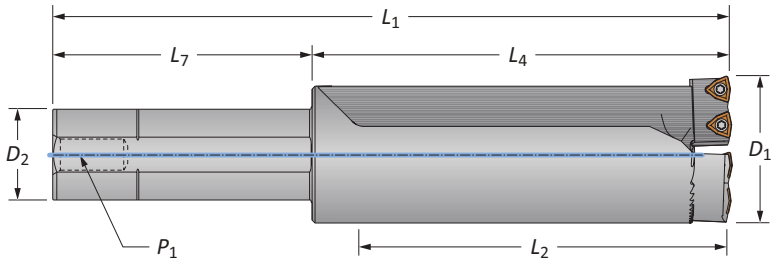

Straight Shank Imperial

	Style	Length	D_1 Range	Holder L_2	Holder L_4	Holder L_1	Shank D_2	Shank L_7	Shank P_1	Part No.*	Cartridges
i	Standard	2.2xD	2.200 - 2.400	5-29/64	6-25/64	10-25/64	1-1/2	4	1/4	**R38X22-150L**	C38-...
	Standard	3.5xD	2.200 - 2.400	8-29/64	9-25/64	13-25/64	1-1/2	4	1/4	**R38X35-150L**	C38-...
	Standard	4.5xD	2.200 - 2.400	10-61/64	11-57/64	15-57/64	1-1/2	4	1/4	**R38X45-150L**	C38-...
	Stacked Plate	2.2xD	2.200 - 2.400	5-3/8	6-19/64	10-19/64	1-1/2	4	1/4	**SP38X22-150L**	C38SP-...

*Holder includes cartridges; however, inserts are sold separately.

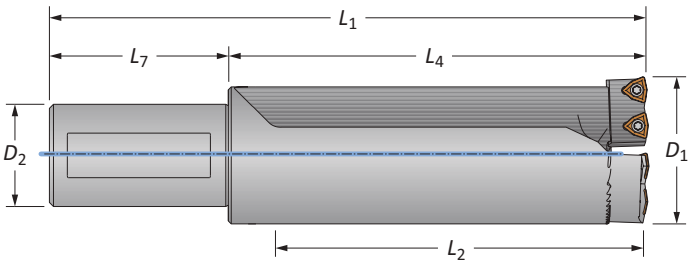

Straight Shank Metric

	Style	Length	D_1 Range	Holder L_2	Holder L_4	Holder L_1	Shank D_2	Shank L_7	Shank P_1	Part No.*	Cartridges
m	Standard	2.2xD	55.88 - 60.96	138.66	162.20	232.20	40.00	70.00	–	**R38X22-40M**	C38-...
	Standard	3.5xD	55.88 - 60.96	214.86	238.40	308.40	40.00	70.00	–	**R38X35-40M**	C38-...
	Standard	4.5xD	55.88 - 60.96	278.36	301.90	371.90	40.00	70.00	–	**R38X45-40M**	C38-...
	Stacked Plate	2.2xD	55.88 - 60.96	138.66	159.99	230.00	40.00	70.00	–	**SP38X22-40M**	C38SP-...

*Holder includes cartridges; however, inserts are sold separately.

A60: 28 - 29
Key on A60: 1
A60: 2 - 4

i = Imperial (in)
m = Metric (mm)

Revolution Drill Holders

38 Series | Diameter Range: 2.200" - 2.400" (55.88 mm - 60.96 mm)

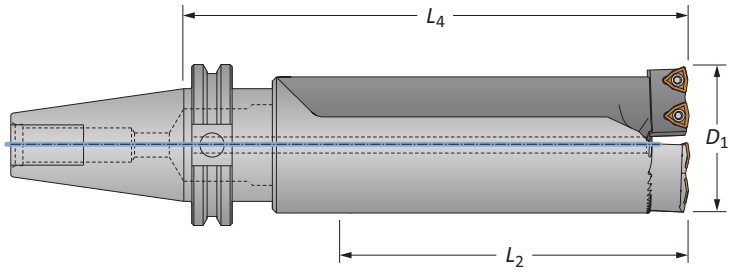

CV40 Shank

	Style	Length	D_1 Range	Holder L_2	Holder L_4	Shank	Part No.*	Cartridges
i	Standard	2.2xD	2.200 - 2.400	5-29/64	7-49/64	CV40	**R38X22-CV40**	C38-...
i	Standard	3.5xD	2.200 - 2.400	8-29/64	10-49/64	CV40	**R38X35-CV40**	C38-...
i	Standard	4.5xD	2.200 - 2.400	10-61/64	13-17/64	CV40	**R38X45-CV40**	C38-...
	Stacked Plate	2.2xD	2.200 - 2.400	5-3/8	7-43/64	CV40	**SP38X22-CV40**	C38SP-...

*Holder includes cartridges; however, inserts are sold separately.

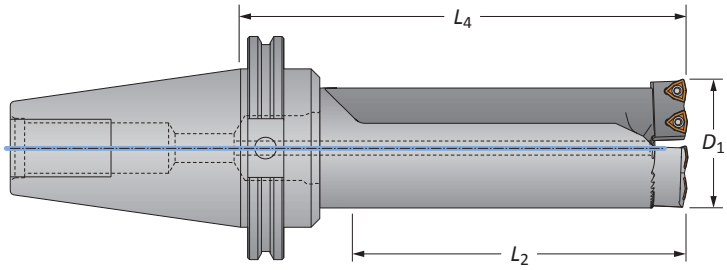

CV50 Shank

	Style	Length	D_1 Range	Holder L_2	Holder L_4	Shank	Part No.*	Cartridges
i	Standard	2.2xD	2.200 - 2.400	5-29/64	7-49/64	CV50	**R38X22-CV50**	C38-...
i	Standard	3.5xD	2.200 - 2.400	8-29/64	10-49/64	CV50	**R38X35-CV50**	C38-...
i	Standard	4.5xD	2.200 - 2.400	10-61/64	13-17/64	CV50	**R38X45-CV50**	C38-...
	Stacked Plate	2.2xD	2.200 - 2.400	5-3/8	7-43/64	CV50	**SP38X22-CV50**	C38SP-...

*Holder includes cartridges; however, inserts are sold separately.

Cartridges

Holder Part No.	Replacement Cartridges	Qty. Inserts Needed	Mounting Screw	Key Size	Adjusting Screw	Driver
R38...	**C38-FIX**	2	MS-17M-1	5 mm	AS-18T9-1	8T-9
	C38-ADJ	2	MS-17M-1	5 mm	AS-18T9-1	8T-9
SP38...	**C38SP-FIX**	2	MS-17M-1	5 mm	AS-18T9-1	8T-9
	C38SP-ADJ	2	MS-17M-1	5 mm	AS-18T9-1	8T-9

IC Inserts

Carbide Grade	Geometry	Part No. AM300®	Part No. AM200®	Part No. TiN	Insert Screws*	Driver
C5 (P35)	Standard	**OP-05T308-P**	**OP-05T308-H**	**OP-05T308-T**	IS-10-1	8T-9
C1 (K35)	Standard	**OP-05T308-1P**	**OP-05T308-1H**	**OP-05T308-1T**	IS-10-1	8T-9
C2 (K25)	Standard	**OP-05T308-2P**	**OP-05T308-2H**	–	IS-10-1	8T-9
C5 (P35)	High Rake	**OP-05T308-PHR**	**OP-05T308-HHR**	–	IS-10-1	8T-9

*Admissible Tightening Torque: 15.5 in-lbs (175 N-cm). Tightening torques are calculated with a friction coefficient of μ = 0.14 and develop 90% of ultimate yield strength.

A60: 28 - 29
Key on A60: 1
A60: 2 - 4

Mounting screws sold in multiples of 4 | Adjusting screws sold in multiples of 4
IC inserts sold in multiples of 10 | Insert screws sold in multiples of 10

i = Imperial (in)
m = Metric (mm)

Revolution Drill Holders

42 Series | Diameter Range: 2.400" - 2.600" (60.96 mm - 66.04 mm)

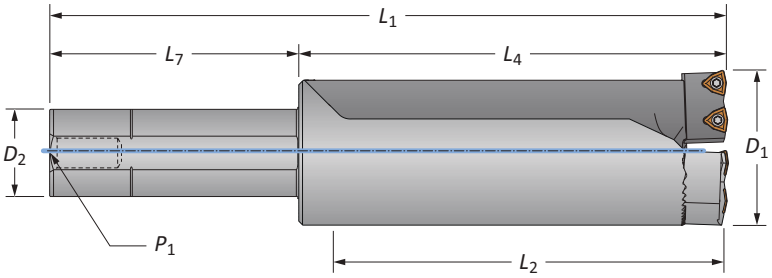

Straight Shank Imperial

	Style	Length	D_1 Range	Holder L_2	Holder L_4	Holder L_1	Shank D_2	Shank L_7	Shank P_1	Part No.*	Cartridges
i	Standard	2.2xD	2.400 - 2.600	5-45/64	6-49/64	10-49/64	1-1/2	4	1/4	**R42X22-150L**	C42-...
	Standard	3.5xD	2.400 - 2.600	9-13/64	10-17/64	14-17/64	1-1/2	4	1/4	**R42X35-150L**	C42-...
	Standard	4.5xD	2.400 - 2.600	11-45/64	12-49/64	16-49/64	1-1/2	4	1/4	**R42X45-150L**	C42-...
	Stacked Plate	2.2xD	2.400 - 2.600	5-3/4	6-13/16	10-13/16	1-1/2	4	1/4	**SP42X22-150L**	C42SP-...

*Holder includes cartridges; however, inserts are sold separately.

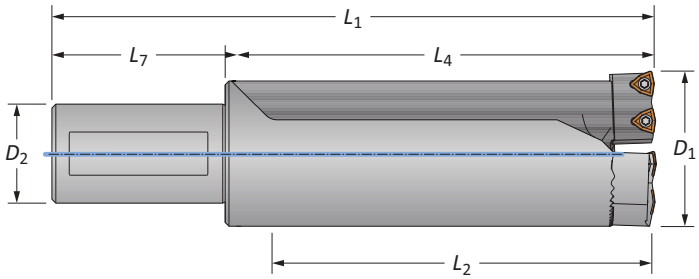

Straight Shank Metric

	Style	Length	D_1 Range	Holder L_2	Holder L_4	Holder L_1	Shank D_2	Shank L_7	Shank P_1	Part No.*	Cartridges
m	Standard	2.2xD	60.96 - 66.04	144.88	171.68	241.68	40.00	70.00	–	**R42X22-40M**	C42-...
	Standard	3.5xD	60.96 - 66.04	233.78	260.58	330.58	40.00	70.00	–	**R42X35-40M**	C42-...
	Standard	4.5xD	60.96 - 66.04	297.28	324.08	394.08	40.00	70.00	–	**R42X45-40M**	C42-...
	Stacked Plate	2.2xD	60.96 - 66.04	146.10	172.90	242.90	40.00	70.00	–	**SP42X22-40M**	C42SP-...

*Holder includes cartridges; however, inserts are sold separately.

A60: 28 - 29
Key on A60: 1
A60: 2 - 4

i = Imperial (in)
m = Metric (mm)

Revolution Drill Holders

42 Series | Diameter Range: 2.400" - 2.600" (60.96 mm - 66.04 mm)

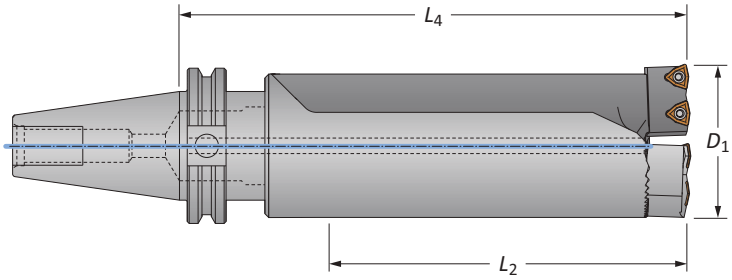

CV40 Shank

	Style	Length	D_1 Range	Holder L_2	Holder L_4	Shank	Part No.*	Cartridges
	Standard	2.2xD	2.400 - 2.600	5-45/64	8-9/64	CV40	**R42X22-CV40**	C42-...
	Standard	3.5xD	2.400 - 2.600	9-13/64	11-41/64	CV40	**R42X35-CV40**	C42-...
	Standard	4.5xD	2.400 - 2.600	11-45/64	14-9/64	CV40	**R42X45-CV40**	C42-...
	Stacked Plate	2.2xD	2.400 - 2.600	5-3/4	8-3/16	CV40	**SP42X22-CV40**	C42SP-...

*Holder includes cartridges; however, inserts are sold separately.

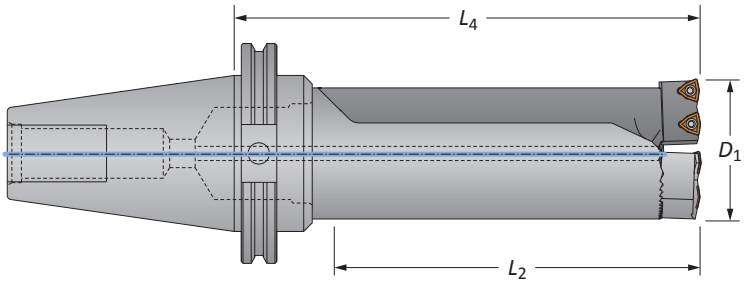

CV50 Shank

	Style	Length	D_1 Range	Holder L_2	Holder L_4	Shank	Part No.*	Cartridges
	Standard	2.2xD	2.400 - 2.600	5-45/64	8-9/64	CV50	**R42X22-CV50**	C42-...
	Standard	3.5xD	2.400 - 2.600	9-13/64	11-41/64	CV50	**R42X35-CV50**	C42-...
	Standard	4.5xD	2.400 - 2.600	11-45/64	14-9/64	CV50	**R42X45-CV50**	C42-...
	Stacked Plate	2.2xD	2.400 - 2.600	5-3/4	8-3/16	CV50	**SP42X22-CV50**	C42SP-...

*Holder includes cartridges; however, inserts are sold separately.

Cartridges

Holder Part No.	Replacement Cartridges	Qty. Inserts Needed	Mounting Screw	Key Size	Adjusting Screw	Driver
R42...	**C42-FIX**	2	MS-19M-1	6 mm	AS-18T9-1	8T-9
	C42-ADJ	2	MS-19M-1	6 mm	AS-18T9-1	8T-9
SP42...	**C42SP-FIX**	2	MS-19M-1	6 mm	AS-18T9-1	8T-9
	C42SP-ADJ	2	MS-19M-1	6 mm	AS-18T9-1	8T-9

IC Inserts

Carbide Grade	Geometry	Part No. AM300®	Part No. AM200®	Part No. TiN	Insert Screws*	Driver
C5 (P35)	Standard	**OP-05T308-P**	**OP-05T308-H**	**OP-05T308-T**	IS-10-1	8T-9
C1 (K35)	Standard	**OP-05T308-1P**	**OP-05T308-1H**	**OP-05T308-1T**	IS-10-1	8T-9
C2 (K25)	Standard	**OP-05T308-2P**	**OP-05T308-2H**	–	IS-10-1	8T-9
C5 (P35)	High Rake	**OP-05T308-PHR**	**OP-05T308-HHR**	–	IS-10-1	8T-9

*Admissible Tightening Torque: 15.5 in-lbs (175 N-cm). Tightening torques are calculated with a friction coefficient of μ = 0.14 and develop 90% of ultimate yield strength.

A60: 28 - 29
Key on A60: 1
A60: 2 - 4

Mounting screws sold in multiples of 4 | Adjusting screws sold in multiples of 4
IC inserts sold in multiples of 10 | Insert screws sold in multiples of 10

ⓘ = Imperial (in)
ⓜ = Metric (mm)

Revolution Drill Holders

44 Series | Diameter Range: 2.600" - 2.800" (66.04 mm - 71.12 mm)

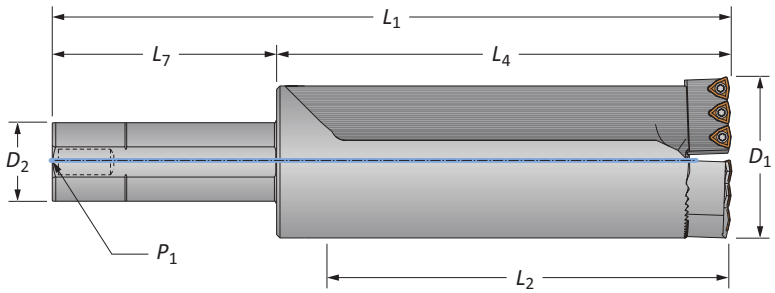

Straight Shank Imperial

	Style	Length	D_1 Range	Holder L_2	Holder L_4	Holder L_1	Shank D_2	Shank L_7	Shank P_1	Part No.*	Cartridges
	Standard	2.2xD	2.600 - 2.800	6-13/64	7-1/2	11-1/2	1-1/2	4	1/4	**R44X22-150L**	C44-...
i	Standard	3.5xD	2.600 - 2.800	9-61/64	11-1/4	15-1/4	1-1/2	4	1/4	**R44X35-150L**	C44-...
	Stacked Plate	2.2xD	2.600 - 2.800	6-1/4	7-35/64	11-35/64	1-1/2	4	1/4	**SP44X22-150L**	C44SP-...

*Holder includes cartridges; however, inserts are sold separately.

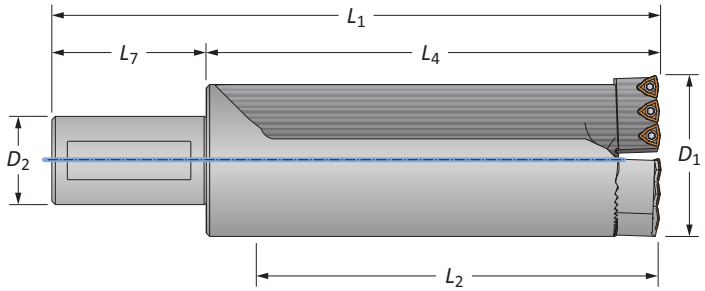

Straight Shank Metric

	Style	Length	D_1 Range	Holder L_2	Holder L_4	Holder L_1	Shank D_2	Shank L_7	Shank P_1	Part No.*	Cartridges
	Standard	2.2xD	66.04 - 71.12	157.63	190.65	260.65	40.00	70.00	–	**R44X22-40M**	C44-...
m	Standard	3.5xD	66.04 - 71.12	252.88	285.90	355.90	40.00	70.00	–	**R44X35-40M**	C44-...
	Stacked Plate	2.2xD	66.04 - 71.12	158.70	191.69	261.70	40.00	70.00	–	**SP44X22-40M**	C44SP-...

*Holder includes cartridges; however, inserts are sold separately.

A60: 28 - 29
Key on A60: 1
A60: 2 - 4

i = Imperial (in)
m = Metric (mm)

Revolution Drill Holders

44 Series | Diameter Range: 2.600" - 2.800" (66.04 mm - 71.12 mm)

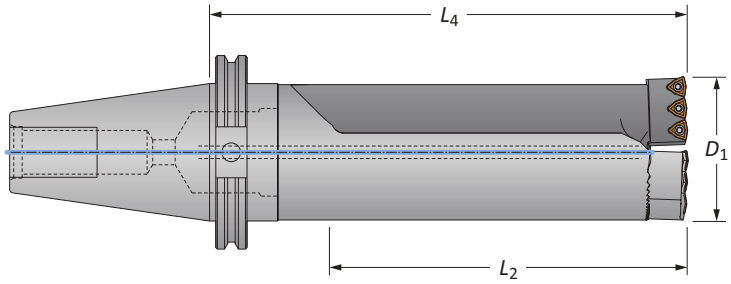

CV50 Shank

	Style	Length	D_1 Range	Holder L_2	Holder L_4	Shank	Part No.*	Cartridges
	Standard	2.2xD	2.600 - 2.800	6-13/64	8-7/8	CV50	**R44X22-CV50**	C44-...
i	Standard	3.5xD	2.600 - 2.800	9-61/64	12-5/8	CV50	**R44X35-CV50**	C44-...
	Stacked Plate	2.2xD	2.600 - 2.800	6-1/4	8-59/64	CV50	**SP44X22-CV50**	C44SP-...

*Holder includes cartridges; however, inserts are sold separately.

Cartridges

Holder Part No.	Replacement Cartridges	Qty. Inserts Needed	Mounting Screw	Key Size	Adjusting Screw	Driver
R44...	**C44-FIX**	3	MS-19M-1	6 mm	AS-18T9-1	8T-9
	C44-ADJ	3	MS-19M-1	6 mm	AS-18T9-1	8T-9
SP44...	**C44SP-FIX**	3	MS-19M-1	6 mm	AS-18T9-1	8T-9
	C44SP-ADJ	3	MS-19M-1	6 mm	AS-18T9-1	8T-9

IC Inserts

Carbide Grade	Geometry	Part No. AM300®	Part No. AM200®	Part No. TiN	Insert Screws*	Driver
C5 (P35)	Standard	**OP-05T308-P**	**OP-05T308-H**	**OP-05T308-T**	IS-10-1	8T-9
C1 (K35)	Standard	**OP-05T308-1P**	**OP-05T308-1H**	**OP-05T308-1T**	IS-10-1	8T-9
C2 (K25)	Standard	**OP-05T308-2P**	**OP-05T308-2H**	–	IS-10-1	8T-9
C5 (P35)	High Rake	**OP-05T308-PHR**	**OP-05T308-HHR**	–	IS-10-1	8T-9

*Admissible Tightening Torque: 15.5 in-lbs (175 N-cm). Tightening torques are calculated with a friction coefficient of μ = 0.14 and develop 90% of ultimate yield strength.

A60: 28 - 29
Key on A60: 1
A60: 2 - 4

Mounting screws sold in multiples of 4 | Adjusting screws sold in multiples of 4
IC inserts sold in multiples of 10 | Insert screws sold in multiples of 10

i = Imperial (in)
m = Metric (mm)

Revolution Drill Holders

46 Series | Diameter Range: 2.800" - 3.000" (71.12 mm - 76.20 mm)

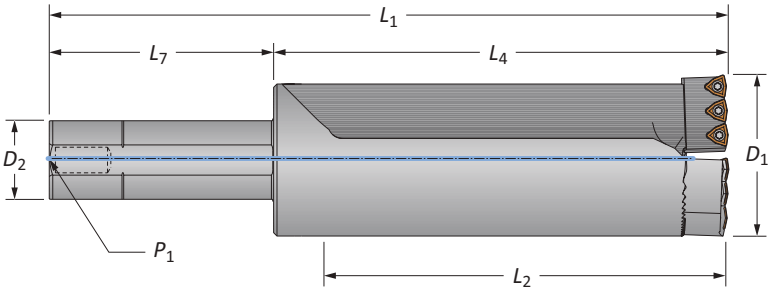

Straight Shank Imperial

	Style	Length	D_1 Range	Holder L_2	Holder L_4	Holder L_1	Shank D_2	Shank L_7	Shank P_1	Part No.*	Cartridges
	Standard	2.2xD	2.800 - 3.000	6-45/64	8	12	1-1/2	4	1/4	**R46X22-150L**	C46-...
i	Standard	3.5xD	2.800 - 3.000	10-29/64	11-3/4	15-3/4	1-1/2	4	1/4	**R46X35-150L**	C46-...
	Stacked Plate	2.2xD	2.800 - 3.000	6-3/4	8-3/64	12-3/64	1-1/2	4	1/4	**SP46X22-150L**	C46SP-...

*Holder includes cartridges; however, inserts are sold separately.

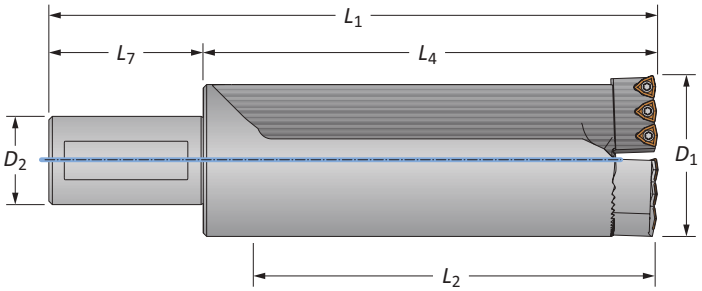

Straight Shank Metric

	Style	Length	D_1 Range	Holder L_2	Holder L_4	Holder L_1	Shank D_2	Shank L_7	Shank P_1	Part No.*	Cartridges
	Standard	2.2xD	71.12 - 76.20	170.36	203.38	273.38	40.00	70.00	–	**R46X22-40M**	C46-...
m	Standard	3.5xD	71.12 - 76.20	265.61	298.63	368.63	40.00	70.00	–	**R46X35-40M**	C46-...
	Stacked Plate	2.2xD	71.12 - 76.20	171.40	204.39	274.40	40.00	70.00	–	**SP46X22-40M**	C46SP-...

*Holder includes cartridges; however, inserts are sold separately.

A60: 28 - 29
Key on A60: 1
A60: 2 - 4

i = Imperial (in)
m = Metric (mm)

Revolution Drill Holders

46 Series | Diameter Range: 2.800" - 3.000" (71.12 mm - 76.20 mm)

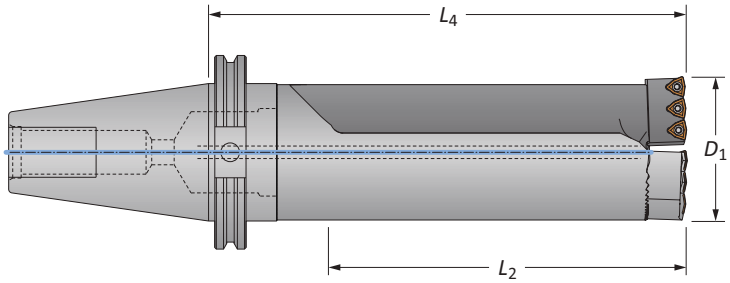

CV50 Shank

	Style	Length	D_1 Range	Holder L_2	Holder L_4	Shank	Part No.*	Cartridges
	Standard	2.2xD	2.800 - 3.000	6-45/64	9-25/64	CV50	**R46X22-CV50**	C46-...
i	Standard	3.5xD	2.800 - 3.000	10-29/64	13-1/8	CV50	**R46X35-CV50**	C46-...
	Stacked Plate	2.2xD	2.800 - 3.000	6-3/4	9-27/64	CV50	**SP46X22-CV50**	C46SP-...

*Holder includes cartridges; however, inserts are sold separately.

Cartridges

Holder Part No.	Replacement Cartridges	Qty. Inserts Needed	Mounting Screw	Key Size	Adjusting Screw	Driver
R46...	**C46-FIX**	3	MS-21M-1	8 mm	AS-18T9-1	8T-9
	C46-ADJ	3	MS-21M-1	8 mm	AS-18T9-1	8T-9
SP46...	**C46SP-FIX**	3	MS-21M-1	8 mm	AS-18T9-1	8T-9
	C46SP-ADJ	3	MS-21M-1	8 mm	AS-18T9-1	8T-9

IC Inserts

Carbide Grade	Geometry	Part No. AM300®	Part No. AM200®	Part No. TiN	Insert Screws*	Driver
C5 (P35)	Standard	**OP-05T308-P**	**OP-05T308-H**	**OP-05T308-T**	IS-10-1	8T-9
C1 (K35)	Standard	**OP-05T308-1P**	**OP-05T308-1H**	**OP-05T308-1T**	IS-10-1	8T-9
C2 (K25)	Standard	**OP-05T308-2P**	**OP-05T308-2H**	–	IS-10-1	8T-9
C5 (P35)	High Rake	**OP-05T308-PHR**	**OP-05T308-HHR**	–	IS-10-1	8T-9

*Admissible Tightening Torque: 15.5 in-lbs (175 N-cm). Tightening torques are calculated with a friction coefficient of μ = 0.14 and develop 90% of ultimate yield strength.

A60: 28 - 29
Key on A60: 1
A60: 2 - 4

Mounting screws sold in multiples of 4 | Adjusting screws sold in multiples of 4
IC inserts sold in multiples of 10 | Insert screws sold in multiples of 10

i = Imperial (in)
m = Metric (mm)

Revolution Drill Holders

48 Series | Diameter Range: 3.000" - 3.200" (76.20 mm - 81.28 mm)

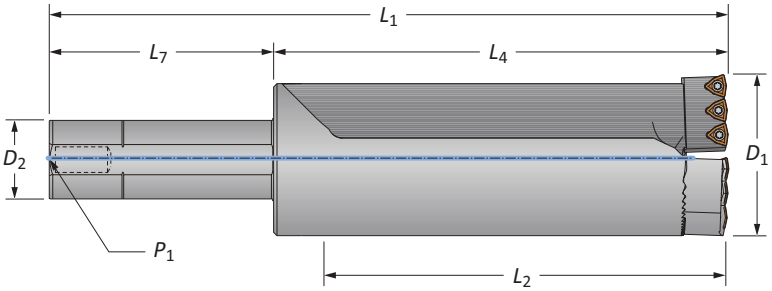

Straight Shank Imperial

	Style	Length	D_1 Range	Holder L_2	Holder L_4	Holder L_1	Shank D_2	Shank L_7	Shank P_1	Part No.*	Cartridges
i	Standard	1.0xD	3.000 - 3.200	3-5/32	4-33/64	9-1/64	2	4-1/2	1/4	**R48X10-200L**	C48-...
	Standard	2.5xD	3.000 - 3.200	7-29/32	9-17/64	13-49/64	2	4-1/2	1/4	**R48X25-200L**	C48-...
	Stacked Plate	1.0xD	3.000 - 3.200	3-15/64	4-19/32	9-3/32	2	4-1/2	1/4	**SP48X10-200L**	C48SP-...
	Stacked Plate	2.5xD	3.000 - 3.200	7-63/64	9-11/32	13-27/32	2	4-1/2	1/4	**SP48X25-200L**	C48SP-...

*Holder includes cartridges; however, inserts are sold separately.

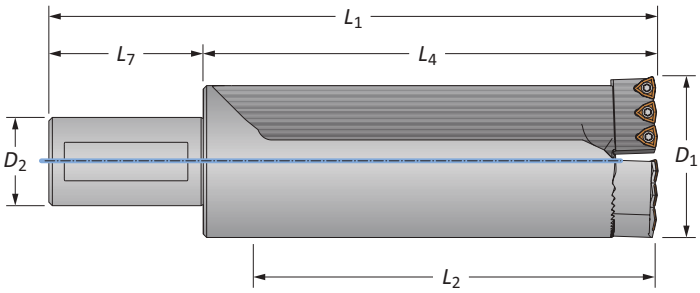

Straight Shank Metric

	Style	Length	D_1 Range	Holder L_2	Holder L_4	Holder L_1	Shank D_2	Shank L_7	Shank P_1	Part No.*	Cartridges
m	Standard	1.0xD	76.20 - 81.28	80.21	114.50	194.50	50.00	80.00	–	**R48X10-50M**	C48-...
	Standard	2.5xD	76.20 - 81.28	200.86	235.15	315.15	50.00	80.00	–	**R48X25-50M**	C48-...
	Stacked Plate	1.0xD	76.20 - 81.28	80.21	116.51	196.52	50.00	80.00	–	**SP48X10-50M**	C48SP-...
	Stacked Plate	2.5xD	76.20 - 81.28	200.86	237.21	317.22	50.00	80.00	–	**SP48X25-50M**	C48SP-...

*Holder includes cartridges; however, inserts are sold separately.

A60: 28 - 29
Key on A60: 1
A60: 2 - 4

i = Imperial (in)
m = Metric (mm)

Revolution Drill Holders

48 Series | Diameter Range: 3.000" - 3.200" (76.20 mm - 81.28 mm)

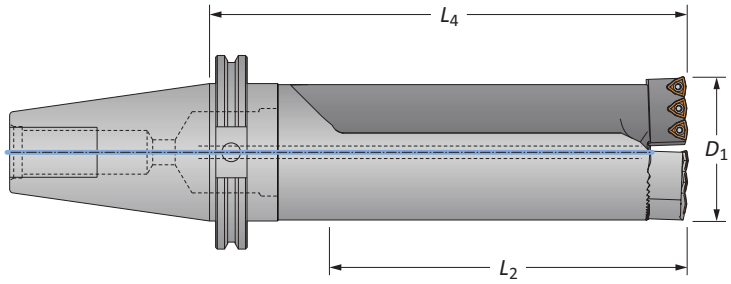

CV50 Shank

Style	Length	D_1 Range	Holder L_2	Holder L_4	Shank	Part No.*	Cartridges
Standard	1.0xD	3.000 - 3.200	3-5/32	5-57/64	CV50	**R48X10-CV50**	C48-...
Standard	2.5xD	3.000 - 3.200	7-29/32	10-41/64	CV50	**R48X25-CV50**	C48-...
Stacked Plate	1.0xD	3.000 - 3.200	3-15/64	5-31/32	CV50	**SP48X10-CV50**	C48SP-...
Stacked Plate	2.5xD	3.000 - 3.200	7-63/64	10-23/32	CV50	**SP48X25-CV50**	C48SP-...

*Holder includes cartridges; however, inserts are sold separately.

Cartridges

Holder Part No.	Replacement Cartridges	Qty. Inserts Needed	Mounting Screw	Key Size	Adjusting Screw	Driver
R48...	**C48-FIX**	3	MS-21M-1	8 mm	AS-18T9-1	8T-9
	C48-ADJ	3	MS-21M-1	8 mm	AS-18T9-1	8T-9
SP48...	**C48SP-FIX**	3	MS-21M-1	8 mm	AS-18T9-1	8T-9
	C48SP-ADJ	3	MS-21M-1	8 mm	AS-18T9-1	8T-9

IC Inserts

Carbide Grade	Geometry	Part No. AM300®	Part No. AM200®	Part No. TiN	Insert Screws*	Driver
C5 (P35)	Standard	**OP-05T308-P**	**OP-05T308-H**	**OP-05T308-T**	IS-10-1	8T-9
C1 (K35)	Standard	**OP-05T308-1P**	**OP-05T308-1H**	**OP-05T308-1T**	IS-10-1	8T-9
C2 (K25)	Standard	**OP-05T308-2P**	**OP-05T308-2H**	–	IS-10-1	8T-9
C5 (P35)	High Rake	**OP-05T308-PHR**	**OP-05T308-HHR**	–	IS-10-1	8T-9

*Admissible Tightening Torque: 15.5 in-lbs (175 N-cm). Tightening torques are calculated with a friction coefficient of μ = 0.14 and develop 90% of ultimate yield strength.

A60: 28 - 29
Key on A60: 1
A60: 2 - 4

Mounting screws sold in multiples of 4 | Adjusting screws sold in multiples of 4
IC inserts sold in multiples of 10 | Insert screws sold in multiples of 10

ⓘ = Imperial (in)
ⓜ = Metric (mm)

Revolution Drill Holders

52 Series | Diameter Range: 3.200" - 3.400" (81.28 mm - 86.36 mm)

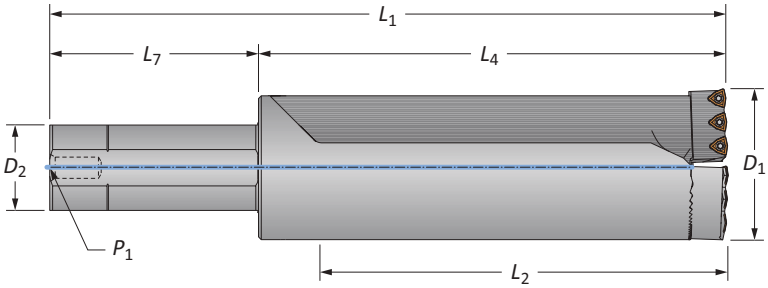

Straight Shank Imperial

	Style	Length	D_1 Range	Holder L_2	Holder L_4	Holder L_1	Shank D_2	Shank L_7	Shank P_1	Part No.*	Cartridges
i	Standard	1.0xD	3.200 - 3.400	3-27/64	5-1/64	9-33/64	2	4-1/2	1/4	**R52X10-200L**	C52-...
	Standard	2.5xD	3.200 - 3.400	8-27/64	10-1/64	14-33/64	2	4-1/2	1/4	**R52X25-200L**	C52-...
	Stacked Plate	1.0xD	3.200 - 3.400	3-31/64	5-5/64	9-37/64	2	4-1/2	1/4	**SP52X10-200L**	C52SP-...
	Stacked Plate	2.5xD	3.200 - 3.400	8-31/64	10-5/64	14-37/64	2	4-1/2	1/4	**SP52X25-200L**	C52SP-...

*Holder includes cartridges; however, inserts are sold separately.

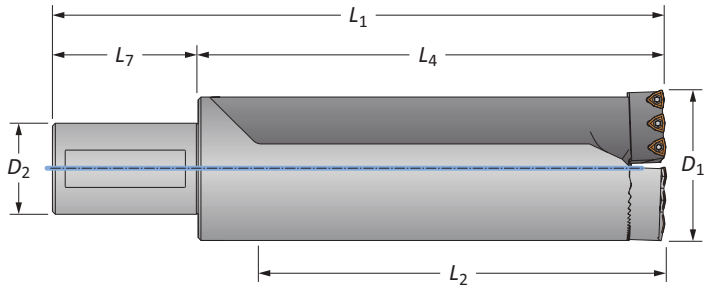

Straight Shank Metric

	Style	Length	D_1 Range	Holder L_2	Holder L_4	Holder L_1	Shank D_2	Shank L_7	Shank P_1	Part No.*	Cartridges
m	Standard	1.0xD	81.28 - 86.36	86.72	127.23	207.23	50.00	80.00	–	**R52X10-50M**	C52-...
	Standard	2.5xD	81.28 - 86.36	213.72	254.02	334.02	50.00	80.00	–	**R52X25-50M**	C52-...
	Stacked Plate	1.0xD	81.28 - 86.36	88.60	129.11	209.12	50.00	80.00	–	**SP52X10-50M**	C52SP-...
	Stacked Plate	2.5xD	81.28 - 86.36	215.60	256.11	336.12	50.00	80.00	–	**SP52X25-50M**	C52SP-...

*Holder includes cartridges; however, inserts are sold separately.

A60: 28 - 29
Key on A60: 1
A60: 2 - 4

i = Imperial (in)
m = Metric (mm)

Revolution Drill Holders

52 Series | Diameter Range: 3.200" - 3.400" (81.28 mm - 86.36 mm)

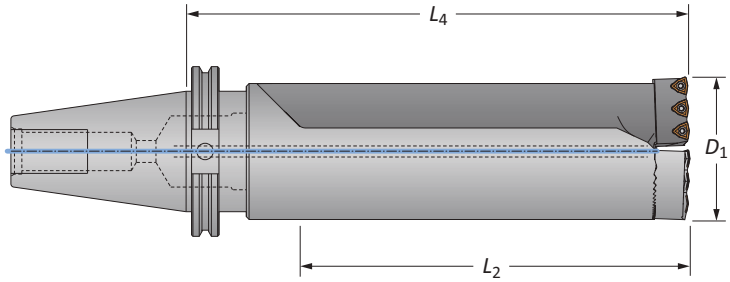

CV50 Shank

	Style	Length	D_1 Range	Holder L_2	Holder L_4	Shank	Part No.*	Cartridges
	Standard	1.0xD	3.200 - 3.400	3-27/64	6-25/64	CV50	**R52X10-CV50**	C52-...
	Standard	2.5xD	3.200 - 3.400	8-27/64	11-25/64	CV50	**R52X25-CV50**	C52-...
	Stacked Plate	1.0xD	3.200 - 3.400	3-31/64	6-29/64	CV50	**SP52X10-CV50**	C52SP-...
	Stacked Plate	2.5xD	3.200 - 3.400	8-31/64	11-29/64	CV50	**SP52X25-CV50**	C52SP-...

*Holder includes cartridges; however, inserts are sold separately.

Cartridges

Holder Part No.	Replacement Cartridges	Qty. Inserts Needed	Mounting Screw	Key Size	Adjusting Screw	Driver
R52...	**C52-FIX**	3	MS-19M-1	6 mm	AS-18T9-1	8T-9
	C52-ADJ	3	MS-19M-1	6 mm	AS-18T9-1	8T-9
SP52...	**C52SP-FIX**	3	MS-19M-1	6 mm	AS-18T9-1	8T-9
	C52SP-ADJ	3	MS-19M-1	6 mm	AS-18T9-1	8T-9

IC Inserts

Carbide Grade	Geometry	Part No. AM300®	Part No. AM200®	Part No. TiN	Insert Screws*	Driver
C5 (P35)	Standard	**OP-05T308-P**	**OP-05T308-H**	**OP-05T308-T**	IS-10-1	8T-9
C1 (K35)	Standard	**OP-05T308-1P**	**OP-05T308-1H**	**OP-05T308-1T**	IS-10-1	8T-9
C2 (K25)	Standard	**OP-05T308-2P**	**OP-05T308-2H**	–	IS-10-1	8T-9
C5 (P35)	High Rake	**OP-05T308-PHR**	**OP-05T308-HHR**	–	IS-10-1	8T-9

*Admissible Tightening Torque: 15.5 in-lbs (175 N-cm). Tightening torques are calculated with a friction coefficient of μ = 0.14 and develop 90% of ultimate yield strength.

A60: 28 - 29
Key on A60: 1
A60: 2 - 4

Mounting screws sold in multiples of 4 | Adjusting screws sold in multiples of 4
IC inserts sold in multiples of 10 | Insert screws sold in multiples of 10

ⓘ = Imperial (in)
ⓜ = Metric (mm)

Revolution Drill Holders

54 Series | Diameter Range: 3.400" - 3.600" (86.36 mm - 91.44 mm)

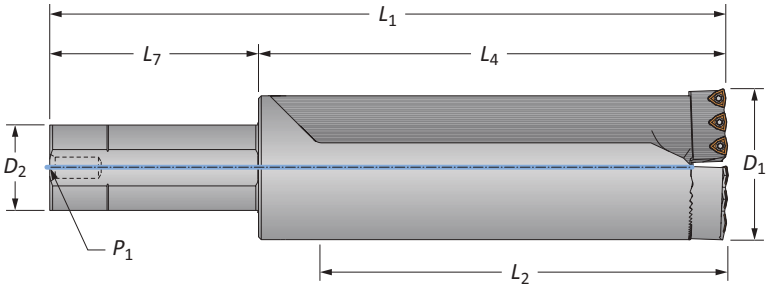

Straight Shank Imperial

	Style	Length	D_1 Range	Holder L_2	Holder L_4	Holder L_1	Shank D_2	Shank L_7	Shank P_1	Part No.*	Cartridges
i	Standard	1.0xD	3.400 - 3.600	3-21/32	5-17/64	9-49/64	2	4-1/2	1/4	**R54X10-200L**	C54-...
	Standard	2.5xD	3.400 - 3.600	8-29/32	10-33/64	15-1/64	2	4-1/2	1/4	**R54X25-200L**	C54-...
	Stacked Plate	1.0xD	3.400 - 3.600	3-23/32	5-21/64	9-53/64	2	4-1/2	1/4	**SP54X10-200L**	C54SP-...
	Stacked Plate	2.5xD	3.400 - 3.600	8-31/32	10-37/64	15-5/64	2	4-1/2	1/4	**SP54X25-200L**	C54SP-...

*Holder includes cartridges; however, inserts are sold separately.

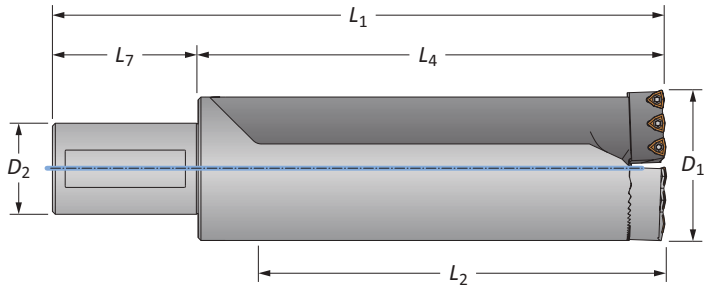

Straight Shank Metric

	Style	Length	D_1 Range	Holder L_2	Holder L_4	Holder L_1	Shank D_2	Shank L_7	Shank P_1	Part No.*	Cartridges
m	Standard	1.0xD	86.36 - 91.44	92.94	133.58	213.58	50.00	80.00	–	**R54X10-50M**	C54-...
	Standard	2.5xD	86.36 - 91.44	226.29	266.93	346.93	50.00	80.00	–	**R54X25-50M**	C54-...
	Stacked Plate	1.0xD	86.36 - 91.44	94.50	135.10	215.10	50.00	80.00	–	**SP54X10-50M**	C54SP-...
	Stacked Plate	2.5xD	86.36 - 91.44	227.81	268.50	348.51	50.00	80.00	–	**SP54X25-50M**	C54SP-...

*Holder includes cartridges; however, inserts are sold separately.

A60: 28 - 29
Key on A60: 1
A60: 2 - 4

i = Imperial (in)
m = Metric (mm)

Revolution Drill Holders

54 Series | Diameter Range: 3.400" - 3.600" (86.36 mm - 91.44 mm)

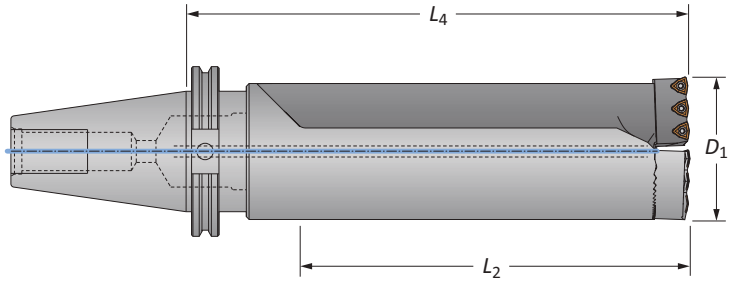

CV50 Shank

Style	Length	D_1 Range	Holder L_2	Holder L_4	Shank	Part No.*	Cartridges
Standard	1.0xD	3.400 - 3.600	3-21/32	6-41/64	CV50	**R54X10-CV50**	C54-...
Standard	2.5xD	3.400 - 3.600	8-29/32	11-57/64	CV50	**R54X25-CV50**	C54-...
Stacked Plate	1.0xD	3.400 - 3.600	3-23/32	6-11/16	CV50	**SP54X10-CV50**	C54SP-...
Stacked Plate	2.5xD	3.400 - 3.600	8-31/32	11-15/16	CV50	**SP54X25-CV50**	C54SP-...

*Holder includes cartridges; however, inserts are sold separately.

Cartridges

Holder Part No.	Replacement Cartridges	Qty. Inserts Needed	Mounting Screw	Key Size	Adjusting Screw	Driver
R54...	**C54-FIX**	3	MS-19M-1	6 mm	AS-18T9-1	8T-9
	C54-ADJ	3	MS-19M-1	6 mm	AS-18T9-1	8T-9
SP54...	**C54SP-FIX**	3	MS-19M-1	6 mm	AS-18T9-1	8T-9
	C54SP-ADJ	3	MS-19M-1	6 mm	AS-18T9-1	8T-9

IC Inserts

Carbide Grade	Geometry	Part No. AM300®	Part No. AM200®	Part No. TiN	Insert Screws*	Driver
C5 (P35)	Standard	**OP-05T308-P**	**OP-05T308-H**	**OP-05T308-T**	IS-10-1	8T-9
C1 (K35)	Standard	**OP-05T308-1P**	**OP-05T308-1H**	**OP-05T308-1T**	IS-10-1	8T-9
C2 (K25)	Standard	**OP-05T308-2P**	**OP-05T308-2H**	–	IS-10-1	8T-9
C5 (P35)	High Rake	**OP-05T308-PHR**	**OP-05T308-HHR**	–	IS-10-1	8T-9

*Admissible Tightening Torque: 15.5 in-lbs (175 N-cm). Tightening torques are calculated with a friction coefficient of μ = 0.14 and develop 90% of ultimate yield strength.

A60: 28 - 29
Key on A60: 1
A60: 2 - 4

Mounting screws sold in multiples of 4 | Adjusting screws sold in multiples of 4
IC inserts sold in multiples of 10 | Insert screws sold in multiples of 10

= Imperial (in)
= Metric (mm)

Revolution Drill Holders

56 Series | Diameter Range: 3.600" - 3.800" (91.44 mm - 96.52 mm)

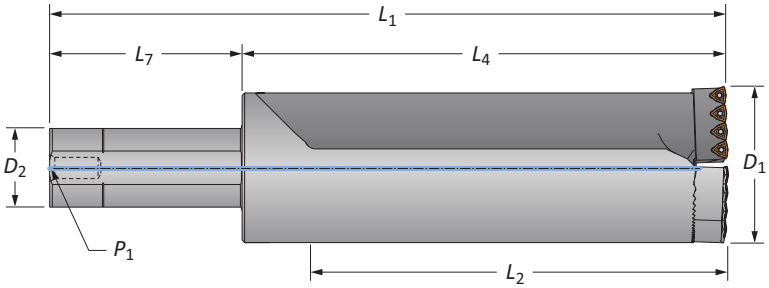

Straight Shank Imperial

	Style	Length	D_1 Range	Holder L_2	Holder L_4	Holder L_1	Shank D_2	Shank L_7	Shank P_1	Part No.*	Cartridges
i	Standard	1.0xD	3.600 - 3.800	3-7/8	5-3/4	10-1/4	2	4-1/2	1/4	**R56X10-200L**	C56-...
	Standard	2.5xD	3.600 - 3.800	9-3/8	11-1/4	15-3/4	2	4-1/2	1/4	**R56X25-200L**	C56-...
	Stacked Plate	1.0xD	3.600 - 3.800	3-15/16	5-13/16	10-5/16	2	4-1/2	1/4	**SP56X10-200L**	C56SP-...
	Stacked Plate	2.5xD	3.600 - 3.800	9-7/16	11-5/16	15-13/16	2	4-1/2	1/4	**SP56X25-200L**	C56SP-...

*Holder includes cartridges; however, inserts are sold separately.

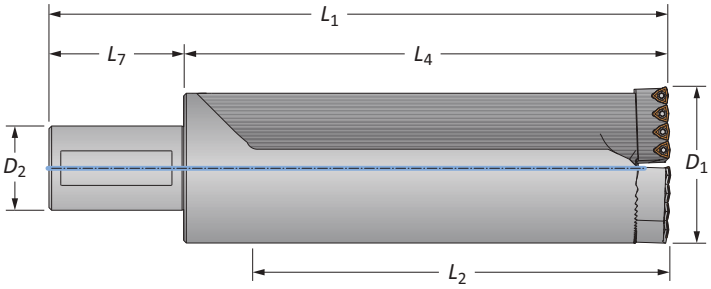

Straight Shank Metric

	Style	Length	D_1 Range	Holder L_2	Holder L_4	Holder L_1	Shank D_2	Shank L_7	Shank P_1	Part No.*	Cartridges
m	Standard	1.0xD	91.44 - 96.52	98.60	146.23	226.23	50.00	80.00	–	**R56X10-50M**	C56-...
	Standard	2.5xD	91.44 - 96.52	238.30	285.93	365.93	50.00	80.00	–	**R56X25-50M**	C56-...
	Stacked Plate	1.0xD	91.44 - 96.52	99.90	147.60	227.61	50.00	80.00	–	**SP56X10-50M**	C56SP-...
	Stacked Plate	2.5xD	91.44 - 96.52	239.60	287.30	367.31	50.00	80.00	–	**SP56X25-50M**	C56SP-...

*Holder includes cartridges; however, inserts are sold separately.

A60: 28 - 29
Key on A60: 1
A60: 2 - 4

i = Imperial (in)
m = Metric (mm)

Revolution Drill Holders

56 Series | Diameter Range: 3.600" - 3.800" (91.44 mm - 96.52 mm)

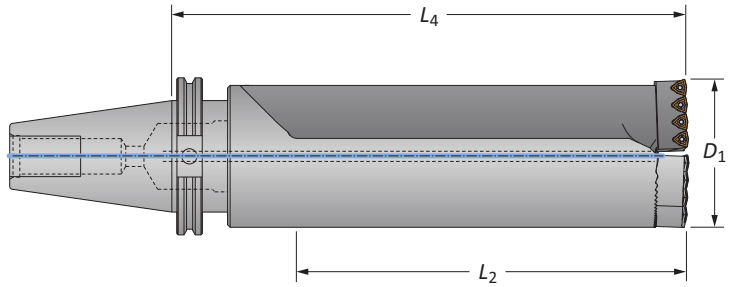

CV50 Shank

Style	Length	D_1 Range	Holder L_2	Holder L_4	Shank	Part No.*	Cartridges
Standard	1.0xD	3.600 - 3.800	3-7/8	7-1/8	CV50	**R56X10-CV50**	C56-...
Standard	2.5xD	3.600 - 3.800	9-3/8	12-5/8	CV50	**R56X25-CV50**	C56-...
Stacked Plate	1.0xD	3.600 - 3.800	3-15/16	7-3/16	CV50	**SP56X10-CV50**	C56SP-...
Stacked Plate	2.5xD	3.600 - 3.800	9-7/16	12-11/16	CV50	**SP56X25-CV50**	C56SP-...

*Holder includes cartridges; however, inserts are sold separately.

Cartridges

Holder Part No.	Replacement Cartridges	Qty. Inserts Needed	Mounting Screw	Key Size	Adjusting Screw	Driver
R56...	**C56-FIX**	4	MS-21M-1	8 mm	AS-18T9-1	8T-9
	C56-ADJ	4	MS-21M-1	8 mm	AS-18T9-1	8T-9
SP56...	**C56SP-FIX**	4	MS-21M-1	8 mm	AS-18T9-1	8T-9
	C56SP-ADJ	4	MS-21M-1	8 mm	AS-18T9-1	8T-9

IC Inserts

Carbide Grade	Geometry	Part No. AM300®	Part No. AM200®	Part No. TiN	Insert Screws*	Driver
C5 (P35)	Standard	**OP-05T308-P**	**OP-05T308-H**	**OP-05T308-T**	IS-10-1	8T-9
C1 (K35)	Standard	**OP-05T308-1P**	**OP-05T308-1H**	**OP-05T308-1T**	IS-10-1	8T-9
C2 (K25)	Standard	**OP-05T308-2P**	**OP-05T308-2H**	–	IS-10-1	8T-9
C5 (P35)	High Rake	**OP-05T308-PHR**	**OP-05T308-HHR**	–	IS-10-1	8T-9

*Admissible Tightening Torque: 15.5 in-lbs (175 N-cm). Tightening torques are calculated with a friction coefficient of μ = 0.14 and develop 90% of ultimate yield strength.

A60: 28 - 29
Key on A60: 1
A60: 2 - 4

Mounting screws sold in multiples of 4 | Adjusting screws sold in multiples of 4
IC inserts sold in multiples of 10 | Insert screws sold in multiples of 10

= Imperial (in)
= Metric (mm)

Revolution Drill Holders

58 Series | Diameter Range: 3.800" - 4.000" (96.52 mm - 101.60 mm)

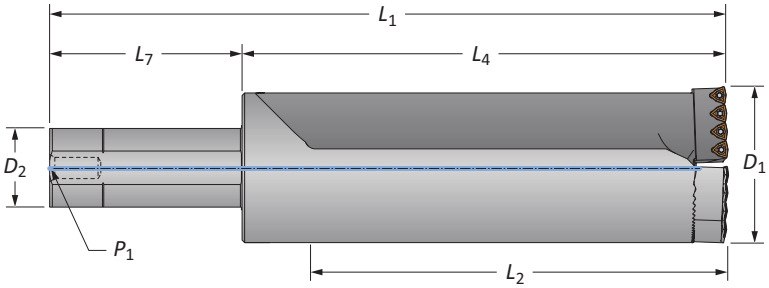

Straight Shank Imperial

	Style	Length	D_1 Range	Holder L_2	Holder L_4	Holder L_1	Shank D_2	Shank L_7	Shank P_1	Part No.*	Cartridges
	Standard	1.0xD	3.800 - 4.000	3-7/8	5-3/4	10-1/4	2	4-1/2	1/4	**R58X10-200L**	C58-...
	Standard	2.5xD	3.800 - 4.000	9-7/8	11-3/4	16-1/4	2	4-1/2	1/4	**R58X25-200L**	C58-...
	Stacked Plate	1.0xD	3.800 - 4.000	3-15/16	5-13/16	10-5/16	2	4-1/2	1/4	**SP58X10-200L**	C58SP-...
	Stacked Plate	2.5xD	3.800 - 4.000	9-15/16	11-13/16	16-5/16	2	4-1/2	1/4	**SP58X25-200L**	C58SP-...

*Holder includes cartridges; however, inserts are sold separately.

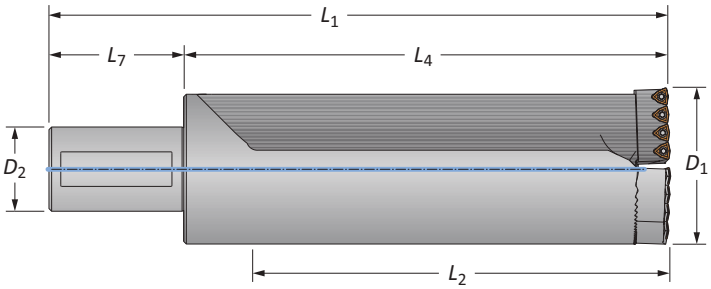

Straight Shank Metric

	Style	Length	D_1 Range	Holder L_2	Holder L_4	Holder L_1	Shank D_2	Shank L_7	Shank P_1	Part No.*	Cartridges
	Standard	1.0xD	96.52 - 101.60	98.60	146.20	226.20	50.00	80.00	–	**R58X10-50M**	C58-...
	Standard	2.5xD	96.52 - 101.60	251.00	298.60	378.60	50.00	80.00	–	**R58X25-50M**	C58-...
	Stacked Plate	1.0xD	96.52 - 101.60	99.80	147.40	227.41	50.00	80.00	–	**SP58X10-50M**	C58SP-...
	Stacked Plate	2.5xD	96.52 - 101.60	252.20	299.80	379.81	50.00	80.00	–	**SP58X25-50M**	C58SP-...

*Holder includes cartridges; however, inserts are sold separately.

A60: 28 - 29
Key on A60: 1
A60: 2 - 4

i = Imperial (in)
m = Metric (mm)

Revolution Drill Holders

58 Series | Diameter Range: 3.800" - 4.000" (96.52 mm - 101.60 mm)

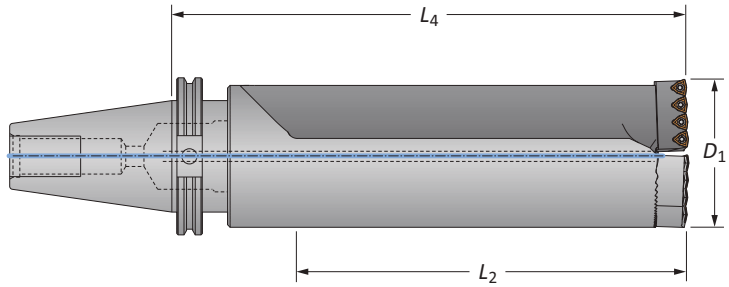

CV50 Shank

Style	Length	D_1 Range	Holder L_2	Holder L_4	Shank	Part No.*	Cartridges
Standard	1.0xD	3.800 - 4.000	3-7/8	7-1/8	CV50	**R58X10-CV50**	C58-...
Standard	2.5xD	3.800 - 4.000	9-7/8	13-1/8	CV50	**R58X25-CV50**	C58-...
Stacked Plate	1.0xD	3.800 - 4.000	3-15/16	7-3/16	CV50	**SP58X10-CV50**	C58SP-...
Stacked Plate	2.5xD	3.800 - 4.000	9-15/16	13-3/16	CV50	**SP58X25-CV50**	C58SP-...

*Holder includes cartridges; however, inserts are sold separately.

Cartridges

Holder Part No.	Replacement Cartridges	Qty. Inserts Needed	Mounting Screw	Key Size	Adjusting Screw	Driver
R58...	**C58-FIX**	4	MS-21M-1	8 mm	AS-18T9-1	8T-9
	C58-ADJ	4	MS-21M-1	8 mm	AS-18T9-1	8T-9
SP58...	**C58SP-FIX**	4	MS-21M-1	8 mm	AS-18T9-1	8T-9
	C58SP-ADJ	4	MS-21M-1	8 mm	AS-18T9-1	8T-9

IC Inserts

Carbide Grade	Geometry	Part No. AM300®	Part No. AM200®	Part No. TiN	Insert Screws*	Driver
C5 (P35)	Standard	**OP-05T308-P**	**OP-05T308-H**	**OP-05T308-T**	IS-10-1	8T-9
C1 (K35)	Standard	**OP-05T308-1P**	**OP-05T308-1H**	**OP-05T308-1T**	IS-10-1	8T-9
C2 (K25)	Standard	**OP-05T308-2P**	**OP-05T308-2H**	–	IS-10-1	8T-9
C5 (P35)	High Rake	**OP-05T308-PHR**	**OP-05T308-HHR**	–	IS-10-1	8T-9

*Admissible Tightening Torque: 15.5 in-lbs (175 N-cm). Tightening torques are calculated with a friction coefficient of μ = 0.14 and develop 90% of ultimate yield strength.

A60: 28 - 29
Key on A60: 1
A60: 2 - 4

Mounting screws sold in multiples of 4 | Adjusting screws sold in multiples of 4
IC inserts sold in multiples of 10 | Insert screws sold in multiples of 10

ⓘ = Imperial (in)
ⓜ = Metric (mm)

Recommended Cutting Data | Imperial (inch)

ISO	Material	Hardness (BHN)	Speed (SFM) AM300®	Speed (SFM) AM200®	Speed (SFM) TiN	Feed Rate (IPR)
P	**Free-Machining Steel** 1118, 1215, 12L14, etc.	100 - 250	900 - 1300	850 - 1200	700 - 900	.0035 - .007
P	**Low-Carbon Steel** 1010, 1020, 1025, 1522, 1144, etc.	85 - 275	850 - 1250	800 - 1150	650 - 850	.003 - .0065
P	**Medium-Carbon Steel** 1030, 1040, 1050, 1527, 1140, 1151, etc.	125 - 325	800 - 1050	750 - 950	600 - 850	.0035 - .0065
P	**Alloy Steel** 4140, 5140, 8640, etc.	125 - 375	750 - 1000	700 - 900	600 - 850	.0035 - .0065
P	**High-Strength Alloy** 4340, 4330V, 300M, etc.	225 - 400	600 - 850	550 - 750	400 - 650	.003 - .005
P	**Structural Steel** A36, A285, A516, etc.	100 - 350	850 - 1050	800 - 950	650 - 850	.003 - .0065
P	**Tool Steel** H-13, H-21, A-4, 0-2, S-3, etc.	150 - 250	400 - 800	350 - 700	250 - 650	.0025 - .005
S	**High-Temp Alloy** Hastelloy B, Inconel 600, etc.	140 - 310	250 - 450	250 - 350	150 - 300	.0025 - .005
M	**Stainless Steel 400 Series** 416, 420, etc.	185 - 350	600 - 850	550 - 750	400 - 650	.003 - .006
M	**Stainless Steel 300 Series** 304, 316, 17-4PH, etc.	135 - 275	600 - 850	550 - 750	400 - 650	.003 - .006
M	**Super Duplex Stainless Steel**	135 - 275	500 - 750	450 - 650	300 - 550	.002 - .005
K	**Nodular, Grey, Ductile Cast Iron**	120 - 320	700 - 900	650 - 800	500 - 700	.004 - .008
N	**Cast Aluminum**	30 - 180	1250 - 1650	1200 - 1550	950 - 1100	.006 - .012
N	**Wrought Aluminum**	30 - 180	1250 - 1650	1200 - 1550	950 - 1100	.006 - .012
N	**Brass**	30 - 100	950 - 1350	900 - 1250	750 - 1100	.005 - .009

Material Constants

Type of Material	Hardness (BHN)	K_m (lbs/in²)
Free-Machining Steel	100 - 250	0.75
Low-Carbon Steel	85 - 275	0.85
Medium-Carbon Steel	125 - 325	0.90
Alloy Steel	125 - 375	1.00
High-Strength Steel	225 - 400	1.15
Structural Steel	100 - 350	1.00
Tool Steel	150 - 250	0.90
High-Temperature Alloy	140 - 310	1.44
Titanium Alloy	140 - 310	0.72
Aerospace Alloy	185 - 350	0.70
Stainless Steel 400 Series	185 - 350	1.08
Stainless Steel 300 Series	135 - 275	0.94
Super Duplex Stainless Steel	135 - 275	0.94
Wear Plate	400 - 600	1.60
Hardened Steel	300 - 500	1.40
Nodular, Ductile Cast Iron	120 - 320	0.65
Grey Cast Iron	120 - 320	0.75
Cast Aluminum	30 - 180	0.40
Wrought Aluminum	30 - 180	0.40
Aluminum Bronze	100 - 250	0.50
Brass	100	0.35
Copper	60	0.30

Formulas

1. **RPM = (3.82 • SFM) / DIA**

where:
RPM = revolutions per minute (rev/min)
SFM = speed (ft/min)
DIA = diameter of drill (inch)

2. **HP = (0.6676 • DIA² • IPR • RPM • K_m) / 0.80**

where:
Tool Power = tool power (HP)
DIA = diameter of drill (inch)
IPR = feed rate (in/rev)
RPM = revolutions per minute (rev/min)
K_m = specific cutting energy (lbs/in²)
machine efficiency (using 0.80 as constant)

3. **Thrust = 148,500 • IPR • DIA • K_m**

where:
Thrust = axial thrust (lbs)
IPR = feed rate (in/rev)
DIA = diameter of drill (inch)
K_m = specific cutting energy (lbs/in²)

4. **Torque = (HP • 5252) / RPM**

where:
Torque = torque (ft-lbs)
HP = tool power (HP)
RPM = revolutions per minute (rev/min)

The table and equations on this page are found in the *Machinery's Handbook*. Permission to simplify and print the equations is granted by the Editor of the *Machinery's Handbook*.

IMPORTANT: The speeds and feeds listed above are considered a general starting point for all applications. Factory technical assistance is available for your specific applications through our Application Engineering department. *ext:* ***7611*** | *email:* **appeng@alliedmachine.com**

Recommended Cutting Data | Metric (mm)

ISO	Material	Hardness (BHN)	Speed (m/min) AM300®	Speed (m/min) AM200®	Speed (m/min) TiN	Feed Rate (mm/rev)
P	**Free-Machining Steel** 1118, 1215, 12L14, etc.	100 - 250	274 - 396	259 - 366	213 - 274	0.09 - 0.18
P	**Low-Carbon Steel** 1010, 1020, 1025, 1522, 1144, etc.	85 - 275	259 - 381	244 - 351	198 - 259	0.08 - 0.17
P	**Medium-Carbon Steel** 1030, 1040, 1050, 1527, 1140, 1151, etc.	125 - 325	244 - 320	229 - 290	183 - 259	0.09 - 0.17
P	**Alloy Steel** 4140, 5140, 8640, etc.	125 - 375	229 - 305	213 - 274	183 - 259	0.09 - 0.17
P	**High-Strength Alloy** 4340, 4330V, 300M, etc.	225 - 400	183 - 259	168 - 229	122 - 198	0.08 - 0.13
P	**Structural Steel** A36, A285, A516, etc.	100 - 350	259 - 320	244 - 290	198 - 259	0.08 - 0.17
P	**Tool Steel** H-13, H-21, A-4, 0-2, S-3, etc.	150 - 250	122 - 244	107 - 213	76 - 198	0.06 - 0.13
S	**High-Temp Alloy** Hastelloy B, Inconel 600, etc.	140 - 310	76 - 137	76 - 107	46 - 91	0.06 - 0.11
M	**Stainless Steel 400 Series** 416, 420, etc.	185 - 350	183 - 259	168 - 229	122 - 198	0.08 - 0.15
M	**Stainless Steel 300 Series** 304, 316, 17-4PH, etc.	135 - 275	183 - 259	168 - 229	122 - 198	0.08 - 0.15
M	**Super Duplex Stainless Steel**	135 - 275	152 - 228	137 - 198	91 - 152	0.05 - 0.12
K	**Nodular, Grey, Ductile Cast Iron**	120 - 320	213 - 274	198 - 244	152 - 213	0.10 - 0.20
N	**Cast Aluminum**	30 - 180	381 - 503	381 - 472	290 - 335	0.15 - 0.30
N	**Wrought Aluminum**	30 - 180	381 - 503	381 - 472	290 - 335	0.15 - 0.30
N	**Brass**	30 - 100	290 - 411	274 - 381	229 - 335	0.13 - 0.23

Material Constants

Type of Material	Hardness (BHN)	K_m (kPa)
Free-Machining Steel	100 - 250	5.17
Low-Carbon Steel	85 - 275	5.86
Medium-Carbon Steel	125 - 325	6.21
Alloy Steel	125 - 375	6.90
High-Strength Steel	225 - 400	7.93
Structural Steel	100 - 350	6.90
Tool Steel	150 - 250	6.21
High-Temperature Alloy	140 - 310	9.93
Titanium Alloy	140 - 310	4.97
Aerospace Alloy	185 - 350	4.48
Stainless Steel 400 Series	185 - 350	7.45
Stainless Steel 300 Series	135 - 275	6.48
Super Duplex Stainless Steel	135 - 275	6.48
Wear Plate	400 - 600	11.04
Hardened Steel	300 - 500	9.66
Nodular, Ductile Cast Iron	120 - 320	4.48
Grey Cast Iron	120 - 320	5.17
Cast Aluminum	30 - 180	2.76
Wrought Aluminum	30 - 180	2.76
Aluminum Bronze	100 - 250	3.45
Brass	100	2.41
Copper	60	2.07

Formulas

1. **RPM = (318.31 • m/min) / DIA**

where:
RPM = revolutions per minute (rev/min)
m/min = speed (m/min)
DIA = diameter of drill (mm)

2. **kW = (DIA^2 • mm/rev • RPM • K_m) / 181,018**

where:
kW = tool power (kW)
DIA = diameter of drill (mm)
mm/rev = feed rate (mm/rev)
RPM = revolutions per minute (rev/min)
K_m = specific cutting energy (kPa)
machine efficiency (using 181,018 as constant)

3. **Thrust = 148.78 • mm/rev • DIA • K_m**

where:
Thrust = axial thrust (N)
mm/rev = feed rate (mm/rev)
DIA = diameter of drill (mm)
K_m = specific cutting energy (kPa)

4. **Torque = (kW • 9549.3) / RPM**

where:
Torque = torque (Nm)
HP = tool power (kW)
RPM = revolutions per minute (rev/min)

The table and equations on this page are found in the *Machinery's Handbook*. Permission to simplify and print the equations is granted by the Editor of the *Machinery's Handbook*.

IMPORTANT: The speeds and feeds listed above are considered a general starting point for all applications. Factory technical assistance is available for your specific applications through our Application Engineering department. *ext:* ***7611*** | *email:* **appeng@alliedmachine.com**

SECTION

A70

Opening Drill®

Opening Drill®

Large Diameter Replaceable IC Insert Drilling System

- **Diameter Range:** 2.000" - 5.620" (50.80 mm - 142.75 mm)

Need larger holes? No problem.

The Opening Drill is an extremely effective tool designed to enlarge existing holes. It is available in nine different shank styles: Straight, ABS 63, CAT V40, CAT V50, HSK 63A/C, HSK 100A/C, BT 40, BT 50, and DIN50.

In a *single* operation, an existing hole can be opened and large amounts of material can be removed. The insert design reduces chip size and improves evacuation. Also, inventory and cost are reduced by the adjustable diameters.

Excellent chip control.	Improves hole quality and surface finish.	Provides maximum durability and stability.

Applicable Industries

Aerospace · Agriculture · Automotive · Firearms · General Machining · Oil & Gas · Renewable Energy

Your safety and the safety of others is very important. This catalog contains important safety messages. Always read and follow all safety precautions.

This triangle is a safety hazard symbol. It alerts you to potential safety hazards that can cause tool failure and serious injury.

When you see this symbol in the catalog, look for a related safety message that may be near this triangle or referred to in the nearby text.

There are safety signal words also used in the catalog. Safety messages follow these words.

WARNING

WARNING (shown above) means that failure to follow the precautions in this message could result in tool failure and serious injury.

NOTICE means that failure to follow the precautions in this message could result in damage to the tool or machine but not result in personal injury.

NOTE and **IMPORTANT** are also used. These are important that you read and follow but are not safety-related.

Visit www.alliedmachine.com for the most up-to-date information and procedures.

Reference Icons
The following icons will appear throughout the catalog to help you navigate between products.

Setup / Assembly Information
Detailed instructions and information regarding the corresponding part(s)

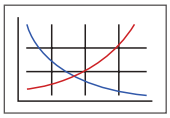

Recommended Cutting Data
Speed and feed recommendations for optimum and safe drilling

Coolant-Through Option
Indicates that the product is coolant through

Series	Diameter Range	
	Imperial (inch)	Metric (mm)
OP1	2.000 - 2.500	50.80 - 63.50
OP2	2.500 - 3.000	63.50 - 76.20
OP3	3.000 - 4.120	76.20 - 104.65
OP4	4.120 - 5.620	104.65 - 142.75

Opening Drill® Contents

Introduction Information

Product Overview 2
Setup Instructions 3
Product Nomenclature. . . . . 4 - 5

Drill Shank Style

Straight Imperial 6
Straight Metric 7
CAT40 8
CAT50 9
BT40. 10
BT50. 11
HSK63 12
HSK100 13
ABS63 14
DIN50 15

Recommended Cutting Data

Imperial (inch) . . . . . 16 - 17
Metric (mm) . . . . . 18 - 19

Product Overview

Features

- Can be used as a rotating or stationary tool.
- Can be used in rough boring operations.
- Available in multiple different shanks (see chart below).
- Smooth cutting action and quiet operations in lathes and mills.
- Special lengths, diameters, and shanks are available upon request.

Advantages

- Opens an existing hole in a single operation.
- Ignores core shifts up to 1/8" (3.18 mm) providing straight and true holes without the need for boring.
- Allows for large amounts of material removal.
- Unique design enables larger holes to be made on low horsepower machines.
- Replaceable cartridges protect your investment.
- Adjustable diameters reduce inventory and cost.

Shank Options

Straight

CAT40

CAT50

BT40

BT50

HSK63

HSK100

DIN50

ABS63

AM300®

AM200®

TiN

2 Inserts
(OP1 - OP3 series)

3 Inserts
(OP4 series)

Insert Application Recommendations

Carbide Grade Options	
C5 (P35)	General purpose carbide grade suitable for most applications. ▶ *Common application in steels and stainless steels.*
C1 (K35)	Toughest carbide grade. Provides the best combination of edge strength and tool life. ▶ *Recommended for less rigid applications.*
C2 (K25)	Higher wear-resistant carbide suitable for abrasive material applications. ▶ *Recommended for grey, ductile, and nodular irons.*
Additional Geometry Option	
High Rake (HR)	Provides superior chip control and tool life in long chipping carbon and alloy steels below 200 BHN.

IC Inserts

- The design allows for excellent chip control and aggressive penetration rates.
- The proprietary AM200® and AM300® coatings increase tool life above competitors' premium coatings.
- The same inserts are used for both Revolution Drill and Opening Drill products.

Setup Instructions

Step 1:
Loosen the mounting screws on both cartridges.

Step 2:
Set one cartridge to the finish diameter by tightening the adjustment screw against the adjustment pin.

Step 3:
Tighten the mounting screws on the cartridge to 11-14 ft-lbf (15-19 N-m).

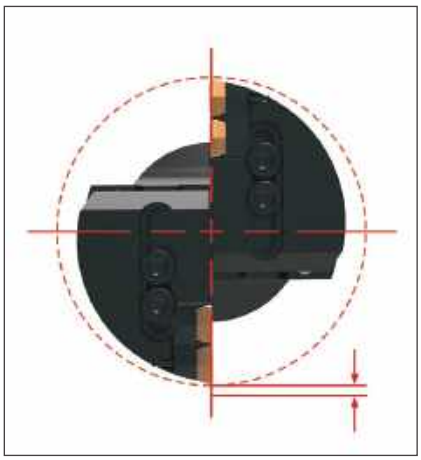

Step 4:
Set the opposing cartridge with 0.160" (4.06 mm) to 0.200" (5.08 mm) radial offset inward by tightening the adjustment screw against the adjustment pin (optimum situation for each insert to remove equal material).

Step 5:
Tighten the mounting screws on the cartridge to 11-14 ft-lbf (15-19 N-m).

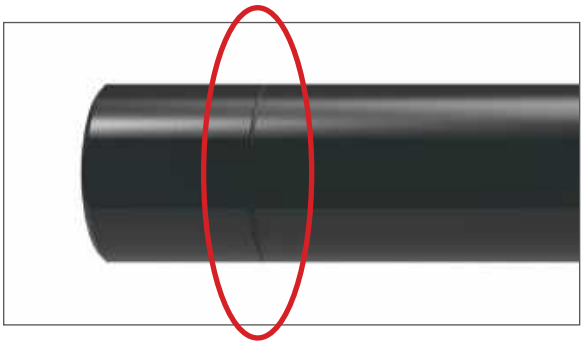

Straight Shanks

- Designed for lathe applications.
- Can be cut off for use in endmill holders.
- The score mark (circled above) is provided for recommended cut length.
- Cut and deburr at the score mark.
- This improves rigidity when the body sits against the face of an endmill holder.

Product Nomenclature

Opening Drill Holders

OP1	–	1S	–	SS1.5
1		2		3

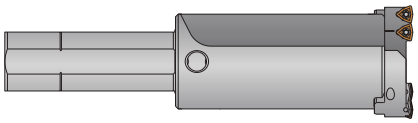

1. Series	2. Length	3. Shank Type	
OP1 = 2.000" - 2.500" (50.80 mm - 63.50 mm)	**1S** = Short	**SS1.5** = 1-1/2 Ø straight	**BT40** = BT40
OP2 = 2.500" - 3.000" (63.50 mm - 76.20 mm)	**1L** = Long	**SS2.0** = 2 Ø straight	**BT50** = BT50
OP3 = 3.000" - 4.120" (76.20 mm - 104.65 mm)		**40M** = 40 mm straight	**HSK63** = HSK 63A/C
OP4 = 4.120" - 5.620" (104.65 mm - 142.75 mm)		**50M** = 50 mm straight	**HSK100** = HSK 100A/C
		CV40 = CAT40	**ABS63** = ABS63
		CV50 = CAT50	**DV50** = DIN50

Reference Key

Symbol	Attribute
D_1	Drill diameter range
D_2	Shank diameter
D_3	Body diameter
L_1	Overall length
L_2	Maximum drill depth
L_4	Holder length
L_7	Shank length
P_1	Rear pipe tap

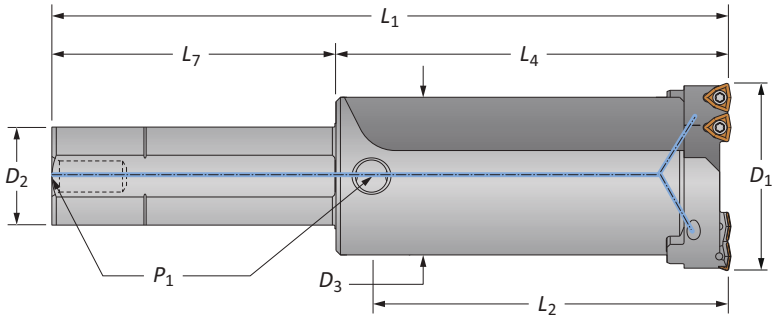

Product Nomenclature

Opening Drill Inserts

OP	–	05	T3	08	–	1	H	HR
1		2	3	4		5	6	7

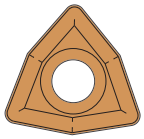

1. Compatible with:	2. IC Type	3. Thickness	4. Radius	5. Carbide Grade
Opening Drill® Revolution Drill®	**05** = 5/16"	**T3** = 5/32"	**08** = 1/32"	**Blank** = C5 (P35) **1** = C1 (K35) **2** = C2 (K25)

6. Coating	7. Geometry
P = AM300® **H** = AM200® **T** = TiN **A** = TiAlN **N** = TiCN **U** = Uncoated	**Blank** = General Purpose **HR** = High Rake

Opening Drill Holders

Straight Shank | Imperial | Diameter Range: 2.000" - 5.620" (50.80 mm - 142.75 mm)

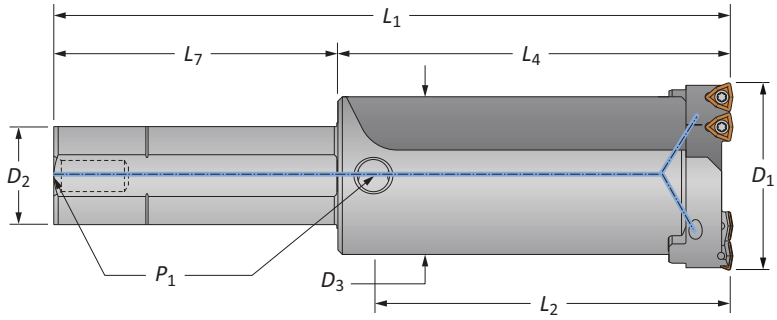

Holders

	Length	D_1 Range	Holder D_3	Holder L_2	Holder L_4	Holder L_1	Shank D_2	Shank L_7	Shank P_1	Part No.	Cartridges
	Short	2.000 - 2.500	1.840	3-9/32	4-3/64	8-3/64	1-1/2	4	1/4 NPT	**OP1-1S-SS1.5**	OP1-WC05
	Long	2.000 - 2.500	1.840	5-17/32	6-19/64	10-19/64	1-1/2	4	1/4 NPT	**OP1-1L-SS1.5**	OP1-WC05
	Short	2.500 - 3.000	2.220	4-43/64	5-1/2	9-1/2	1-1/2	4	1/4 NPT	**OP2-1S-SS1.5**	OP2-WC05
	Long	2.500 - 3.000	2.220	7-43/64	8-1/2	12-1/2	1-1/2	4	1/4 NPT	**OP2-1L-SS1.5**	OP2-WC05
	Short	3.000 - 4.120	2.806	5-7/64	6	10	1-1/2	4	1/4 NPT	**OP3-1S-SS1.5**	OP3-WC05
	Long	3.000 - 4.120	2.806	9-7/64	10	14	1-1/2	4	1/4 NPT	**OP3-1L-SS1.5**	OP3-WC05
	Short	4.120 - 5.620	3.500	5-1/64	6	10-1/2	2	4-1/2	1/4 NPT	**OP4-1S-SS2.0**	OP4-WC05
	Long	4.120 - 5.620	3.500	10-33/64	11-1/2	16	2	4-1/2	1/4 NPT	**OP4-1L-SS2.0**	OP4-WC05

*Holder includes cartridges; however, inserts are sold separately.

Cartridges

Replacement Cartridges	Qty. Inserts Needed	Mounting Screw	Key Size	Adjusting Screw	Driver
OP1-WC05	2	MS-13M-1	5 mm	AS-10T9-1	8T-9
OP2-WC05	2	MS-15M-1	5 mm	AS-10T9-1	8T-9
OP3-WC05	2	MS-15M-1	5 mm	AS-12T9-1	8T-9
OP4-WC05	3	MS-15M-1	5 mm	AS-14T9-1	8T-9

IC Inserts

Carbide Grade	Geometry	Part No. AM300®	Part No. AM200®	Part No. TiN	Insert Screws*	Driver
C5 (P35)	Standard	**OP-05T308-P**	**OP-05T308-H**	**OP-05T308-T**	IS-10-1	8T-9
C1 (K35)	Standard	**OP-05T308-1P**	**OP-05T308-1H**	**OP-05T308-1T**	IS-10-1	8T-9
C2 (K25)	Standard	**OP-05T308-2P**	**OP-05T308-2H**	–	IS-10-1	8T-9
C5 (P35)	High Rake	**OP-05T308-PHR**	**OP-05T308-HHR**	–	IS-10-1	8T-9

*Admissible Tightening Torque: 15.5 in-lbs (175 N-cm). Tightening torques are calculated with a friction coefficient of μ = 0.14 and develop 90% of ultimate yield strength.

A70: 16 - 19
Key on A70: 1
A70: 2 - 3

IC inserts sold in multiples of 10 | Insert screws sold in multiples of 10
Mounting screws sold in multiples of 4 | Adjusting screws sold in multiples of 4

i = Imperial (in)
m = Metric (mm)

Opening Drill Holders

Straight Shank | Metric | Diameter Range: 2.000" - 5.620" (50.80 mm - 142.75 mm)

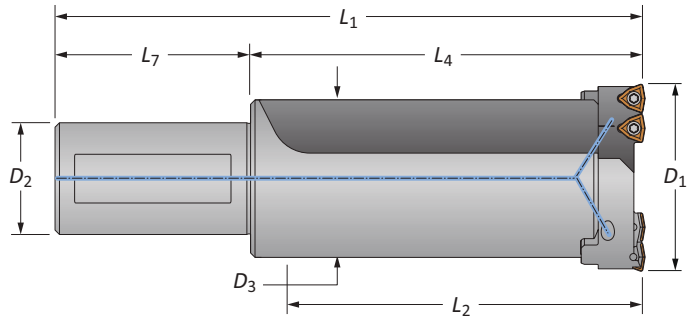

Holders

	Length	D_1 Range	Holder D_3	Holder L_2	Holder L_4	Holder L_1	Shank D_2	Shank L_7	Shank P_1	Part No.	Cartridges
m	Short	50.80 - 63.50	46.74	83.46	104.44	174.45	40.00	70.00	–	**OP1-1S-40M**	OP1-WC05
	Long	50.80 - 63.50	46.74	140.61	161.59	231.60	40.00	70.00	–	**OP1-1L-40M**	OP1-WC05
	Short	63.50 - 76.20	56.39	118.52	141.25	211.25	40.00	70.00	–	**OP2-1S-40M**	OP2-WC05
	Long	63.50 - 76.20	56.39	194.72	217.45	287.45	40.00	70.00	–	**OP2-1L-40M**	OP2-WC05
	Short	76.20 - 104.65	71.27	129.90	153.95	223.95	40.00	70.00	–	**OP3-1S-40M**	OP3-WC05
	Long	76.20 - 104.65	71.27	231.50	255.55	325.55	40.00	70.00	–	**OP3-1L-40M**	OP3-WC05
	Short	104.65 - 142.65	88.90	127.43	153.95	233.96	50.00	80.00	–	**OP4-1S-50M**	OP4-WC05
	Long	104.65 - 142.65	88.90	267.13	293.65	373.66	50.00	80.00	–	**OP4-1L-50M**	OP4-WC05

*Holder includes cartridges; however, inserts are sold separately.

Cartridges

Replacement Cartridges	Qty. Inserts Needed	Mounting Screw	Key Size	Adjusting Screw	Driver
OP1-WC05	2	MS-13M-1	5 mm	AS-10T9-1	8T-9
OP2-WC05	2	MS-15M-1	5 mm	AS-10T9-1	8T-9
OP3-WC05	2	MS-15M-1	5 mm	AS-12T9-1	8T-9
OP4-WC05	3	MS-15M-1	5 mm	AS-14T9-1	8T-9

IC Inserts

Carbide Grade	Geometry	Part No. AM300®	Part No. AM200®	Part No. TiN	Insert Screws*	Driver
C5 (P35)	Standard	**OP-05T308-P**	**OP-05T308-H**	**OP-05T308-T**	IS-10-1	8T-9
C1 (K35)	Standard	**OP-05T308-1P**	**OP-05T308-1H**	**OP-05T308-1T**	IS-10-1	8T-9
C2 (K25)	Standard	**OP-05T308-2P**	**OP-05T308-2H**	–	IS-10-1	8T-9
C5 (P35)	High Rake	**OP-05T308-PHR**	**OP-05T308-HHR**	–	IS-10-1	8T-9

*Admissible Tightening Torque: 15.5 in-lbs (175 N-cm). Tightening torques are calculated with a friction coefficient of μ = 0.14 and develop 90% of ultimate yield strength.

A70: 16 - 19
Key on A70: 1
A70: 2 - 3

IC inserts sold in multiples of 10 | Insert screws sold in multiples of 10
Mounting screws sold in multiples of 4 | Adjusting screws sold in multiples of 4

ⓘ = Imperial (in)
ⓜ = Metric (mm)

Opening Drill Holders

CAT40 Shank | Diameter Range: 2.000" - 5.620" (50.80 mm - 142.75 mm)

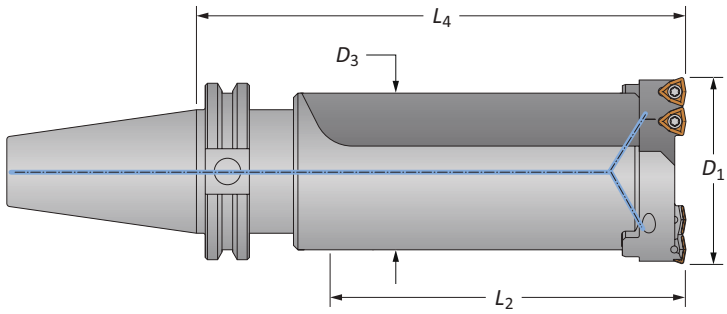

Holders

	Length	D_1 Range	Holder D_3	Holder L_2	Holder L_4	Part No.	Cartridges
	Short	2.000 - 2.500	1.840	3-9/32	5-27/64	**OP1-1S-CV40**	OP1-WC05
	Long	2.000 - 2.500	1.840	5-17/32	7-43/64	**OP1-1L-CV40**	OP1-WC05
	Short	2.500 - 3.000	2.220	4-43/64	6-7/8	**OP2-1S-CV40**	OP2-WC05
i	Long	2.500 - 3.000	2.220	7-43/64	9-7/8	**OP2-1L-CV40**	OP2-WC05
	Short	3.000 - 4.120	2.806	5-7/64	7-3/8	**OP3-1S-CV40**	OP3-WC05
	Long	3.000 - 4.120	2.806	9-7/64	11-3/8	**OP3-1L-CV40**	OP3-WC05
	Short	4.120 - 5.620	3.500	5-1/64	7-3/8	**OP4-1S-CV40**	OP4-WC05

*Holder includes cartridges; however, inserts are sold separately.

Cartridges

Replacement Cartridges	Qty. Inserts Needed	Mounting Screw	Key Size	Adjusting Screw	Driver
OP1-WC05	2	MS-13M-1	5 mm	AS-10T9-1	8T-9
OP2-WC05	2	MS-15M-1	5 mm	AS-10T9-1	8T-9
OP3-WC05	2	MS-15M-1	5 mm	AS-12T9-1	8T-9
OP4-WC05	3	MS-15M-1	5 mm	AS-14T9-1	8T-9

IC Inserts

Carbide Grade	Geometry	Part No. AM300®	Part No. AM200®	Part No. TiN	Insert Screws*	Driver
C5 (P35)	Standard	**OP-05T308-P**	**OP-05T308-H**	**OP-05T308-T**	IS-10-1	8T-9
C1 (K35)	Standard	**OP-05T308-1P**	**OP-05T308-1H**	**OP-05T308-1T**	IS-10-1	8T-9
C2 (K25)	Standard	**OP-05T308-2P**	**OP-05T308-2H**	–	IS-10-1	8T-9
C5 (P35)	High Rake	**OP-05T308-PHR**	**OP-05T308-HHR**	–	IS-10-1	8T-9

*Admissible Tightening Torque: 15.5 in-lbs (175 N-cm). Tightening torques are calculated with a friction coefficient of μ = 0.14 and develop 90% of ultimate yield strength.

A70: 16 - 19
Key on A70: 1
A70: 2 - 3

IC inserts sold in multiples of 10 | Insert screws sold in multiples of 10
Mounting screws sold in multiples of 4 | Adjusting screws sold in multiples of 4

i = Imperial (in)
m = Metric (mm)

Opening Drill Holders

CAT50 Shank | Diameter Range: 2.000" - 5.620" (50.80 mm - 142.75 mm)

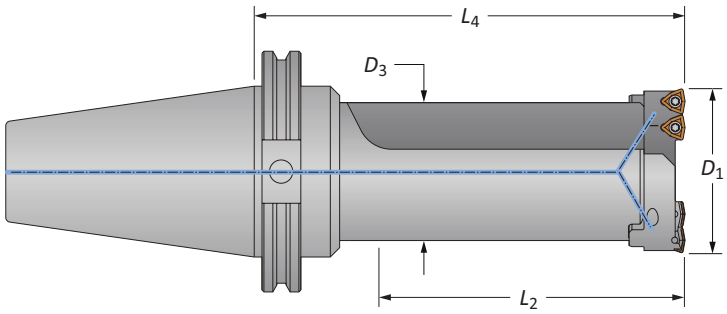

Holders

	Length	D_1 Range	Holder D_3	Holder L_2	Holder L_4	Part No.	Cartridges
	Short	2.000 - 2.500	1.840	3-9/32	5-27/64	**OP1-1S-CV50**	OP1-WC05
	Long	2.000 - 2.500	1.840	5-17/32	7-43/64	**OP1-1L-CV50**	OP1-WC05
	Short	2.500 - 3.000	2.220	4-43/64	6-7/8	**OP2-1S-CV50**	OP2-WC05
	Long	2.500 - 3.000	2.220	7-43/64	9-7/8	**OP2-1L-CV50**	OP2-WC05
	Short	3.000 - 4.120	2.806	5-7/64	7-3/8	**OP3-1S-CV50**	OP3-WC05
	Long	3.000 - 4.120	2.806	9-7/64	11-3/8	**OP3-1L-CV50**	OP3-WC05
	Short	4.120 - 5.620	3.500	5-1/64	7-3/8	**OP4-1S-CV50**	OP4-WC05
	Long	4.120 - 5.620	3.500	10-33/64	12-7/8	**OP4-1L-CV50**	OP4-WC05

*Holder includes cartridges; however, inserts are sold separately.

Cartridges

Replacement Cartridges	Qty. Inserts Needed	Mounting Screw	Key Size	Adjusting Screw	Driver
OP1-WC05	2	MS-13M-1	5 mm	AS-10T9-1	8T-9
OP2-WC05	2	MS-15M-1	5 mm	AS-10T9-1	8T-9
OP3-WC05	2	MS-15M-1	5 mm	AS-12T9-1	8T-9
OP4-WC05	3	MS-15M-1	5 mm	AS-14T9-1	8T-9

IC Inserts

Carbide Grade	Geometry	Part No. AM300®	Part No. AM200®	Part No. TiN	Insert Screws*	Driver
C5 (P35)	Standard	**OP-05T308-P**	**OP-05T308-H**	**OP-05T308-T**	IS-10-1	8T-9
C1 (K35)	Standard	**OP-05T308-1P**	**OP-05T308-1H**	**OP-05T308-1T**	IS-10-1	8T-9
C2 (K25)	Standard	**OP-05T308-2P**	**OP-05T308-2H**	–	IS-10-1	8T-9
C5 (P35)	High Rake	**OP-05T308-PHR**	**OP-05T308-HHR**	–	IS-10-1	8T-9

*Admissible Tightening Torque: 15.5 in-lbs (175 N-cm). Tightening torques are calculated with a friction coefficient of μ = 0.14 and develop 90% of ultimate yield strength.

A70: 16 - 19
Key on A70: 1
A70: 2 - 3

IC inserts sold in multiples of 10 | Insert screws sold in multiples of 10
Mounting screws sold in multiples of 4 | Adjusting screws sold in multiples of 4

= Imperial (in)
= Metric (mm)

Opening Drill Holders

BT40 Shank | Diameter Range: 2.000" - 5.620" (50.80 mm - 142.75 mm)

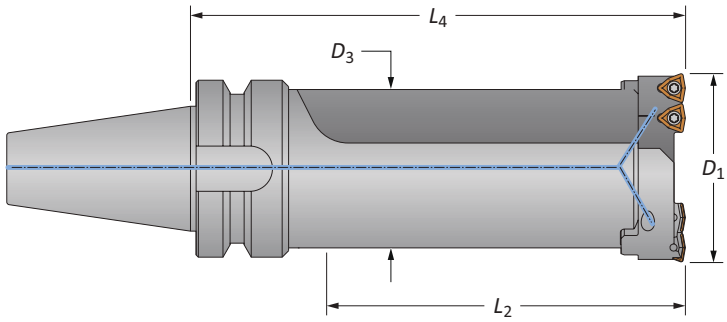

Holders

	Length	D_1 Range	Holder D_3	Holder L_2	Holder L_4	Part No.	Cartridges
	Short	50.80 - 63.50	46.74	83.46	137.85	**OP1-1S-BT40**	OP1-WC05
	Long	50.80 - 63.50	46.74	140.61	195.00	**OP1-1L-BT40**	OP1-WC05
	Short	63.50 - 76.20	56.39	118.52	174.68	**OP2-1S-BT40**	OP2-WC05
m	Long	63.50 - 76.20	56.39	194.72	250.88	**OP2-1L-BT40**	OP2-WC05
	Short	76.20 - 104.65	71.27	129.90	187.38	**OP3-1S-BT40**	OP3-WC05
	Long	76.20 - 104.65	71.27	231.50	288.98	**OP3-1L-BT40**	OP3-WC05
	Short	104.65 - 142.75	88.90	127.43	187.38	**OP4-1S-BT40**	OP4-WC05

*Holder includes cartridges; however, inserts are sold separately.

Cartridges

Replacement Cartridges	Qty. Inserts Needed	Mounting Screw	Key Size	Adjusting Screw	Driver
OP1-WC05	2	MS-13M-1	5 mm	AS-10T9-1	8T-9
OP2-WC05	2	MS-15M-1	5 mm	AS-10T9-1	8T-9
OP3-WC05	2	MS-15M-1	5 mm	AS-12T9-1	8T-9
OP4-WC05	3	MS-15M-1	5 mm	AS-14T9-1	8T-9

IC Inserts

Carbide Grade	Geometry	Part No. AM300®	Part No. AM200®	Part No. TiN	Insert Screws*	Driver
C5 (P35)	Standard	**OP-05T308-P**	**OP-05T308-H**	**OP-05T308-T**	IS-10-1	8T-9
C1 (K35)	Standard	**OP-05T308-1P**	**OP-05T308-1H**	**OP-05T308-1T**	IS-10-1	8T-9
C2 (K25)	Standard	**OP-05T308-2P**	**OP-05T308-2H**	–	IS-10-1	8T-9
C5 (P35)	High Rake	**OP-05T308-PHR**	**OP-05T308-HHR**	–	IS-10-1	8T-9

*Admissible Tightening Torque: 15.5 in-lbs (175 N-cm). Tightening torques are calculated with a friction coefficient of μ = 0.14 and develop 90% of ultimate yield strength.

A70: 16 - 19
Key on A70: 1
A70: 2 - 3

IC inserts sold in multiples of 10 | Insert screws sold in multiples of 10
Mounting screws sold in multiples of 4 | Adjusting screws sold in multiples of 4

i = Imperial (in)
m = Metric (mm)

Opening Drill Holders

BT50 Shank | Diameter Range: 2.000" - 5.620" (50.80 mm - 142.75 mm)

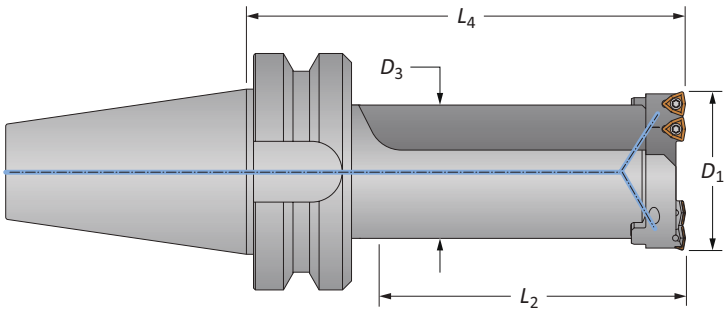

Holders

	Length	D_1 Range	Holder D_3	Holder L_2	Holder L_4	Part No.	Cartridges
m	Short	50.80 - 63.50	46.74	83.46	147.37	**OP1-1S-BT50**	OP1-WC05
	Long	50.80 - 63.50	46.74	140.61	204.52	**OP1-1L-BT50**	OP1-WC05
	Short	63.50 - 76.20	56.39	118.52	184.20	**OP2-1S-BT50**	OP2-WC05
	Long	63.50 - 76.20	56.39	194.72	260.40	**OP2-1L-BT50**	OP2-WC05
	Short	76.20 - 104.65	71.27	129.90	196.90	**OP3-1S-BT50**	OP3-WC05
	Long	76.20 - 104.65	71.27	231.50	298.50	**OP3-1L-BT50**	OP3-WC05
	Short	104.65 - 142.75	88.90	127.43	196.90	**OP4-1S-BT50**	OP4-WC05
	Long	104.65 - 142.75	88.90	267.13	336.60	**OP4-1L-BT50**	OP4-WC05

*Holder includes cartridges; however, inserts are sold separately.

Cartridges

Replacement Cartridges	Qty. Inserts Needed	Mounting Screw	Key Size	Adjusting Screw	Driver
OP1-WC05	2	MS-13M-1	5 mm	AS-10T9-1	8T-9
OP2-WC05	2	MS-15M-1	5 mm	AS-10T9-1	8T-9
OP3-WC05	2	MS-15M-1	5 mm	AS-12T9-1	8T-9
OP4-WC05	3	MS-15M-1	5 mm	AS-14T9-1	8T-9

IC Inserts

Carbide Grade	Geometry	Part No. AM300®	Part No. AM200®	Part No. TiN	Insert Screws*	Driver
C5 (P35)	Standard	**OP-05T308-P**	**OP-05T308-H**	**OP-05T308-T**	IS-10-1	8T-9
C1 (K35)	Standard	**OP-05T308-1P**	**OP-05T308-1H**	**OP-05T308-1T**	IS-10-1	8T-9
C2 (K25)	Standard	**OP-05T308-2P**	**OP-05T308-2H**	–	IS-10-1	8T-9
C5 (P35)	High Rake	**OP-05T308-PHR**	**OP-05T308-HHR**	–	IS-10-1	8T-9

*Admissible Tightening Torque: 15.5 in-lbs (175 N-cm). Tightening torques are calculated with a friction coefficient of μ = 0.14 and develop 90% of ultimate yield strength.

A70: 16 - 19
Key on A70: 1
A70: 2 - 3

IC inserts sold in multiples of 10 | Insert screws sold in multiples of 10
Mounting screws sold in multiples of 4 | Adjusting screws sold in multiples of 4

ⓘ = Imperial (in)
ⓜ = Metric (mm)

Opening Drill Holders

HSK63 Shank | Diameter Range: 2.000" - 5.620" (50.80 mm - 142.75 mm)

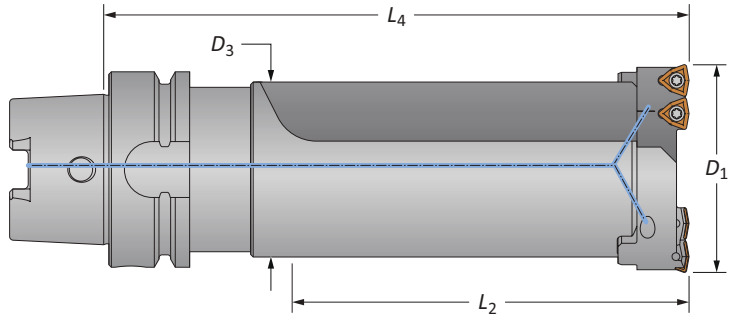

Holders

	Length	D_1 Range	Holder D_3	Holder L_2	Holder L_4	Part No.	Cartridges
	Short	2.000 - 2.500	1.840	3-9/32	5-59/64	**OP1-1S-HSK63**	OP1-WC05
	Long	2.000 - 2.500	1.840	5-17/32	8-11/64	**OP1-1L-HSK63**	OP1-WC05
	Short	2.500 - 3.000	2.220	4-43/64	7-3/8	**OP2-1S-HSK63**	OP2-WC05
i	Long	2.500 - 3.000	2.220	7-43/64	10-3/8	**OP2-1L-HSK63**	OP2-WC05
	Short	3.000 - 4.120	2.806	5-7/64	7-7/8	**OP3-1S-HSK63**	OP3-WC05
	Long	3.000 - 4.120	2.806	9-7/64	11-7/8	**OP3-1L-HSK63**	OP3-WC05
	Short	4.120 - 5.620	3.500	5-1/64	7-7/8	**OP4-1S-HSK63**	OP4-WC05

*Holder includes cartridges; however, inserts are sold separately.

Cartridges

Replacement Cartridges	Qty. Inserts Needed	Mounting Screw	Key Size	Adjusting Screw	Driver
OP1-WC05	2	MS-13M-1	5 mm	AS-10T9-1	8T-9
OP2-WC05	2	MS-15M-1	5 mm	AS-10T9-1	8T-9
OP3-WC05	2	MS-15M-1	5 mm	AS-12T9-1	8T-9
OP4-WC05	3	MS-15M-1	5 mm	AS-14T9-1	8T-9

IC Inserts

Carbide Grade	Geometry	Part No. AM300®	Part No. AM200®	Part No. TiN	Insert Screws*	Driver
C5 (P35)	Standard	**OP-05T308-P**	**OP-05T308-H**	**OP-05T308-T**	IS-10-1	8T-9
C1 (K35)	Standard	**OP-05T308-1P**	**OP-05T308-1H**	**OP-05T308-1T**	IS-10-1	8T-9
C2 (K25)	Standard	**OP-05T308-2P**	**OP-05T308-2H**	–	IS-10-1	8T-9
C5 (P35)	High Rake	**OP-05T308-PHR**	**OP-05T308-HHR**	–	IS-10-1	8T-9

*Admissible Tightening Torque: 15.5 in-lbs (175 N-cm). Tightening torques are calculated with a friction coefficient of μ = 0.14 and develop 90% of ultimate yield strength.

A70: 16 - 19
Key on A70: 1
A70: 2 - 3

IC inserts sold in multiples of 10 | Insert screws sold in multiples of 10
Mounting screws sold in multiples of 4 | Adjusting screws sold in multiples of 4

i = Imperial (in)
m = Metric (mm)

Opening Drill Holders

HSK100 Shank | Diameter Range: 2.000" - 5.620" (50.80 mm - 142.75 mm)

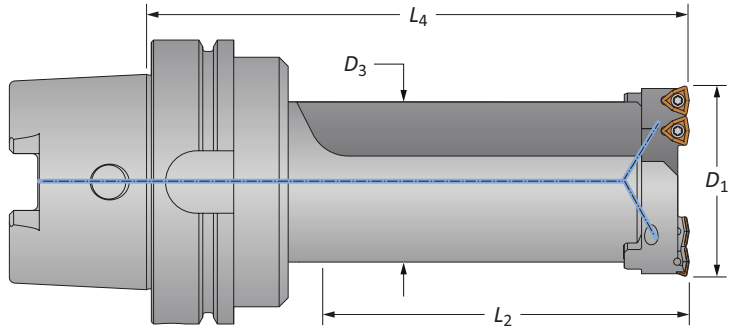

Holders

	Length	D_1 Range	Holder D_3	Holder L_2	Holder L_4	Part No.	Cartridges
	Short	2.000 - 2.500	1.840	3-9/32	6-1/64	**OP1-1S-HSK100**	OP1-WC05
	Long	2.000 - 2.500	1.840	5-17/32	8-17/64	**OP1-1L-HSK100**	OP1-WC05
	Short	2.500 - 3.000	2.220	4-43/64	7-15/32	**OP2-1S-HSK100**	OP2-WC05
	Long	2.500 - 3.000	2.220	7-43/64	10-15/32	**OP2-1L-HSK100**	OP2-WC05
	Short	3.000 - 4.120	2.806	5-7/64	7-31/32	**OP3-1S-HSK100**	OP3-WC05
	Long	3.000 - 4.120	2.806	9-7/64	11-31/32	**OP3-1L-HSK100**	OP3-WC05
	Short	4.120 - 5.620	3.500	5-1/64	7-31/32	**OP4-1S-HSK100**	OP4-WC05
	Long	4.120 - 5.620	3.500	10-33/64	13-15/32	**OP4-1L-HSK100**	OP4-WC05

*Holder includes cartridges; however, inserts are sold separately.

Cartridges

Replacement Cartridges	Qty. Inserts Needed	Mounting Screw	Key Size	Adjusting Screw	Driver
OP1-WC05	2	MS-13M-1	5 mm	AS-10T9-1	8T-9
OP2-WC05	2	MS-15M-1	5 mm	AS-10T9-1	8T-9
OP3-WC05	2	MS-15M-1	5 mm	AS-12T9-1	8T-9
OP4-WC05	3	MS-15M-1	5 mm	AS-14T9-1	8T-9

IC Inserts

Carbide Grade	Geometry	Part No. AM300®	Part No. AM200®	Part No. TiN	Insert Screws*	Driver
C5 (P35)	Standard	**OP-05T308-P**	**OP-05T308-H**	**OP-05T308-T**	IS-10-1	8T-9
C1 (K35)	Standard	**OP-05T308-1P**	**OP-05T308-1H**	**OP-05T308-1T**	IS-10-1	8T-9
C2 (K25)	Standard	**OP-05T308-2P**	**OP-05T308-2H**	–	IS-10-1	8T-9
C5 (P35)	High Rake	**OP-05T308-PHR**	**OP-05T308-HHR**	–	IS-10-1	8T-9

*Admissible Tightening Torque: 15.5 in-lbs (175 N-cm). Tightening torques are calculated with a friction coefficient of μ = 0.14 and develop 90% of ultimate yield strength.

A70: 16 - 19
Key on A70: 1
A70: 2 - 3

IC inserts sold in multiples of 10 | Insert screws sold in multiples of 10
Mounting screws sold in multiples of 4 | Adjusting screws sold in multiples of 4

i = Imperial (in)
m = Metric (mm)

Opening Drill Holders

ABS63 Shank | Diameter Range: 2.000" - 5.620" (50.80 mm - 142.75 mm)

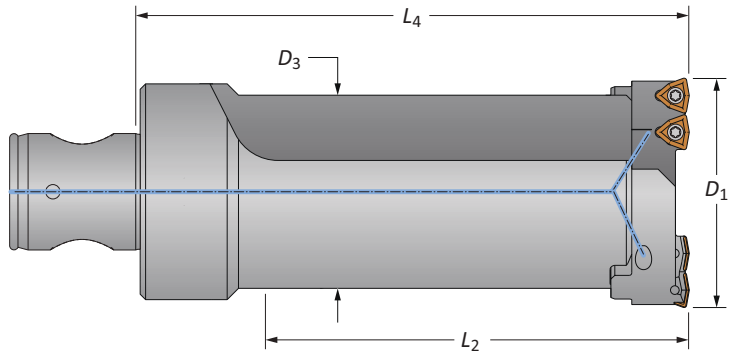

Holders

	Length	D_1 Range	Holder D_3	Holder L_2	Holder L_4	Part No.	Cartridges
	Short	2.000 - 2.500	1.840	3-9/32	5-1/2	**OP1-1S-ABS63**	OP1-WC05
	Long	2.000 - 2.500	1.840	5-17/32	7-3/4	**OP1-1L-ABS63**	OP1-WC05
	Short	2.500 - 3.000	2.220	4-43/64	6-1/4	**OP2-1S-ABS63**	OP2-WC05
i	Long	2.500 - 3.000	2.220	7-43/64	9-1/4	**OP2-1L-ABS63**	OP2-WC05
	Short	3.000 - 4.120	2.806	5-7/64	6-3/4	**OP3-1S-ABS63**	OP3-WC05
	Long	3.000 - 4.120	2.806	9-7/64	10-3/4	**OP3-1L-ABS63**	OP3-WC05
	Short	4.120 - 5.620	3.500	5-1/64	6-3/4	**OP4-1S-ABS63**	OP4-WC05

*Holder includes cartridges; however, inserts are sold separately.

Cartridges

Replacement Cartridges	Qty. Inserts Needed	Mounting Screw	Key Size	Adjusting Screw	Driver
OP1-WC05	2	MS-13M-1	5 mm	AS-10T9-1	8T-9
OP2-WC05	2	MS-15M-1	5 mm	AS-10T9-1	8T-9
OP3-WC05	2	MS-15M-1	5 mm	AS-12T9-1	8T-9
OP4-WC05	3	MS-15M-1	5 mm	AS-14T9-1	8T-9

IC Inserts

Carbide Grade	Geometry	Part No. AM300®	Part No. AM200®	Part No. TiN	Insert Screws*	Driver
C5 (P35)	Standard	**OP-05T308-P**	**OP-05T308-H**	**OP-05T308-T**	IS-10-1	8T-9
C1 (K35)	Standard	**OP-05T308-1P**	**OP-05T308-1H**	**OP-05T308-1T**	IS-10-1	8T-9
C2 (K25)	Standard	**OP-05T308-2P**	**OP-05T308-2H**	–	IS-10-1	8T-9
C5 (P35)	High Rake	**OP-05T308-PHR**	**OP-05T308-HHR**	–	IS-10-1	8T-9

*Admissible Tightening Torque: 15.5 in-lbs (175 N-cm). Tightening torques are calculated with a friction coefficient of μ = 0.14 and develop 90% of ultimate yield strength.

A70: 16 - 19
Key on A70: 1
A70: 2 - 3

IC inserts sold in multiples of 10 | Insert screws sold in multiples of 10
Mounting screws sold in multiples of 4 | Adjusting screws sold in multiples of 4

i = Imperial (in)
m = Metric (mm)

Opening Drill Holders

DIN50 Shank | Diameter Range: 2.000" - 5.620" (50.80 mm - 142.75 mm)

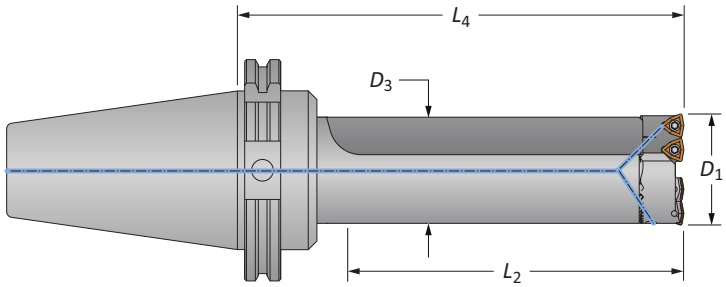

Holders

	Length	D_1 Range	Holder D_3	Holder L_2	Holder L_4	Part No.	Cartridges
m	Short	50.80 - 63.50	46.74	83.46	137.92	**OP1-1S-DV50**	OP1-WC05
	Long	50.80 - 63.50	46.74	140.61	195.07	**OP1-1L-DV50**	OP1-WC05
	Short	63.50 - 76.20	56.39	118.52	174.75	**OP2-1S-DV50**	OP2-WC05
	Long	63.50 - 76.20	56.39	194.72	250.95	**OP2-1L-DV50**	OP2-WC05
	Short	76.20 - 104.65	71.27	129.90	187.45	**OP3-1S-DV50**	OP3-WC05
	Long	76.20 - 104.65	71.27	231.50	289.05	**OP3-1L-DV50**	OP3-WC05
	Short	104.65 - 142.75	88.90	127.43	187.45	**OP4-1S-DV50**	OP4-WC05
	Long	104.65 - 142.75	88.90	267.13	327.15	**OP4-1L-DV50**	OP4-WC05

*Holder includes cartridges; however, inserts are sold separately.

Cartridges

Replacement Cartridges	Qty. Inserts Needed	Mounting Screw	Key Size	Adjusting Screw	Driver
OP1-WC05	2	MS-13M-1	5 mm	AS-10T9-1	8T-9
OP2-WC05	2	MS-15M-1	5 mm	AS-10T9-1	8T-9
OP3-WC05	2	MS-15M-1	5 mm	AS-12T9-1	8T-9
OP4-WC05	3	MS-15M-1	5 mm	AS-14T9-1	8T-9

IC Inserts

Carbide Grade	Geometry	Part No. AM300®	Part No. AM200®	Part No. TiN	Insert Screws*	Driver
C5 (P35)	Standard	**OP-05T308-P**	**OP-05T308-H**	**OP-05T308-T**	IS-10-1	8T-9
C1 (K35)	Standard	**OP-05T308-1P**	**OP-05T308-1H**	**OP-05T308-1T**	IS-10-1	8T-9
C2 (K25)	Standard	**OP-05T308-2P**	**OP-05T308-2H**	–	IS-10-1	8T-9
C5 (P35)	High Rake	**OP-05T308-PHR**	**OP-05T308-HHR**	–	IS-10-1	8T-9

*Admissible Tightening Torque: 15.5 in-lbs (175 N-cm). Tightening torques are calculated with a friction coefficient of μ = 0.14 and develop 90% of ultimate yield strength.

A70: 16 - 19
Key on A70: 1
A70: 2 - 3

IC inserts sold in multiples of 10 | Insert screws sold in multiples of 10
Mounting screws sold in multiples of 4 | Adjusting screws sold in multiples of 4

ⓘ = Imperial (in)
ⓜ = Metric (mm)

Recommended Cutting Data | Imperial (inch)

ISO	Material	Hardness (BHN)	Speed (SFM) AM300®	Speed (SFM) AM200®	Speed (SFM) TiN	Feed Rate (IPR)
P	**Free-Machining Steel** 1118, 1215, 12L14, etc.	100 - 250	900 - 1300	850 - 1200	700 - 900	.0035 - .007
P	**Low-Carbon Steel** 1010, 1020, 1025, 1522, 1144, etc.	85 - 275	850 - 1250	800 - 1150	650 - 850	.003 - .0065
P	**Medium-Carbon Steel** 1030, 1040, 1050, 1527, 1140, 1151, etc.	125 - 325	800 - 1050	750 - 950	600 - 850	.0035 - .0065
P	**Alloy Steel** 4140, 5140, 8640, etc.	125 - 375	750 - 1000	700 - 900	600 - 850	.0035 - .0065
P	**High-Strength Alloy** 4340, 4330V, 300M, etc.	225 - 400	600 - 850	550 - 750	400 - 650	.003 - .005
P	**Structural Steel** A36, A285, A516, etc.	100 - 350	850 - 1050	800 - 950	650 - 850	.003 - .0065
P	**Tool Steel** H-13, H-21, A-4, 0-2, S-3, etc.	150 - 250	400 - 800	350 - 700	250 - 650	.0025 - .005
S	**High-Temp Alloy** Hastelloy B, Inconel 600, etc.	140 - 310	250 - 450	250 - 350	150 - 300	.0025 - .005
M	**Stainless Steel 400 Series** 416, 420, etc.	185 - 350	600 - 850	550 - 750	400 - 650	.003 - .006
M	**Stainless Steel 300 Series** 304, 316, 17-4PH, etc.	135 - 275	600 - 850	550 - 750	400 - 650	.003 - .006
M	**Super Duplex Stainless Steel**	135 - 275	500 - 750	450 - 650	300 - 550	.002 - .005
K	**Nodular, Grey, Ductile Cast Iron**	120 - 320	700 - 900	650 - 800	500 - 700	.004 - .008
N	**Cast Aluminum**	30 - 180	1250 - 1650	1200 - 1550	950 - 1100	.006 - .012
N	**Wrought Aluminum**	30 - 180	1250 - 1650	1200 - 1550	950 - 1100	.006 - .012
N	**Brass**	30 - 100	950 - 1350	900 - 1250	750 - 1100	.005 - .009

Minimum Pilot Hole Diameter = Finish Diameter – C

Ex: To open an existing diameter hole to 2.75" diameter, an OP2 tool would be used. The minimum pilot hole diameter would be: **2.750 - 1.880 = 0.870"**

Opening Drill Series	Drill Diameter Range	C
OP1	2.00 - 2.50	1.880
OP2	2.50 - 3.00	1.880
OP3	3.00 - 4.12	1.880
OP4	4.12 - 5.62	2.680

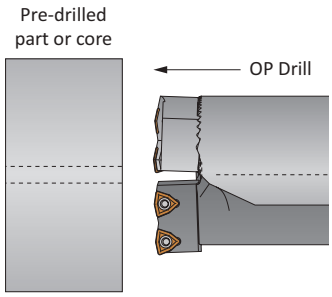

IMPORTANT: The speeds and feeds listed above are considered a general starting point for all applications. Factory technical assistance is available for your specific applications through our Application Engineering department. *ext:* **7611** | *email:* **appeng@alliedmachine.com**

Formulas and Constants | Imperial (inch)

Material Constants

Type of Material	Hardness (BHN)	K_m (lbs/in²)
Free-Machining Steel	100 - 250	0.75
Low-Carbon Steel	85 - 275	0.85
Medium-Carbon Steel	125 - 325	0.90
Alloy Steel	125 - 375	1.00
High-Strength Steel	225 - 400	1.15
Structural Steel	100 - 350	1.00
Tool Steel	150 - 250	0.90
High-Temperature Alloy	140 - 310	1.44
Titanium Alloy	140 - 310	0.72
Aerospace Alloy	185 - 350	0.70
Stainless Steel 400 Series	185 - 350	1.08
Stainless Steel 300 Series	135 - 275	0.94
Super Duplex Stainless Steel	135 - 275	0.94
Wear Plate	400 - 600	1.60
Hardened Steel	300 - 500	1.40
Nodular, Ductile Cast Iron	120 - 320	0.65
Grey Cast Iron	120 - 320	0.75
Cast Aluminum	30 - 180	0.40
Wrought Aluminum	30 - 180	0.40
Aluminum Bronze	100 - 250	0.50
Brass	100	0.35
Copper	60	0.30

Formulas

1. **RPM** $= (3.82 \bullet SFM) / DIA_F$

where:

RPM	= revolutions per minute (rev/min)
SFM	= speed (ft/min)
DIA_F	= finish diameter of drill (inch)

2. **HP** $= (0.5891 \bullet (DIA_F^2 - DIA_P^2) \bullet IPR \bullet RPM \bullet K_m) / 0.80$

where:

Tool Power	= tool power (HP)
DIA_F	= finish diameter of drill (inch)
DIA_P	= pre-drill diameter (inch)
IPR	= feed rate (in/rev)
RPM	= revolutions per minute (rev/min)
K_m	= specific cutting energy (lbs/in²) machine efficiency (using 0.80 as constant)

3. **Thrust** $= 148{,}500 \bullet IPR \bullet (DIA_F - DIA_P) \bullet K_m$

where:

Thrust	= axial thrust (lbs)
IPR	= feed rate (in/rev)
DIA_F	= finish diameter of drill (inch)
DIA_P	= pre-drill diameter (inch)
K_m	= specific cutting energy (lbs/in²)

4. **Torque** $= (HP \bullet 5252) / RPM$

where:

Torque	= torque (ft-lbs)
HP	= tool power (HP)
RPM	= revolutions per minute (rev/min)

The table and equations on this page are found in the *Machinery's Handbook*. Permission to simplify and print the equations is granted by the Editor of the *Machinery's Handbook*.

Recommended Cutting Data | Metric (mm)

ISO	Material	Hardness (BHN)	Speed (m/min) AM300®	Speed (m/min) AM200®	Speed (m/min) TiN	Feed Rate (mm/rev)
P	**Free-Machining Steel** 1118, 1215, 12L14, etc.	100 - 250	274 - 396	259 - 366	213 - 274	0.09 - 0.18
P	**Low-Carbon Steel** 1010, 1020, 1025, 1522, 1144, etc.	85 - 275	259 - 381	244 - 351	198 - 259	0.08 - 0.17
P	**Medium-Carbon Steel** 1030, 1040, 1050, 1527, 1140, 1151, etc.	125 - 325	244 - 320	229 - 290	183 - 259	0.09 - 0.17
P	**Alloy Steel** 4140, 5140, 8640, etc.	125 - 375	229 - 305	213 - 274	183 - 259	0.09 - 0.17
P	**High-Strength Alloy** 4340, 4330V, 300M, etc.	225 - 400	183 - 259	168 - 229	122 - 198	0.08 - 0.13
P	**Structural Steel** A36, A285, A516, etc.	100 - 350	259 - 320	244 - 290	198 - 259	0.08 - 0.17
P	**Tool Steel** H-13, H-21, A-4, 0-2, S-3, etc.	150 - 250	122 - 244	107 - 213	76 - 198	0.06 - 0.13
S	**High-Temp Alloy** Hastelloy B, Inconel 600, etc.	140 - 310	76 - 137	76 - 107	46 - 91	0.06 - 0.11
M	**Stainless Steel 400 Series** 416, 420, etc.	185 - 350	183 - 259	168 - 229	122 - 198	0.08 - 0.15
M	**Stainless Steel 300 Series** 304, 316, 17-4PH, etc.	135 - 275	183 - 259	168 - 229	122 - 198	0.08 - 0.15
M	**Super Duplex Stainless Steel**	135 - 275	152 - 228	137 - 198	91 - 152	0.05 - 0.12
K	**Nodular, Grey, Ductile Cast Iron**	120 - 320	213 - 274	198 - 244	152 - 213	0.10 - 0.20
N	**Cast Aluminum**	30 - 180	381 - 503	381 - 472	290 - 335	0.15 - 0.30
N	**Wrought Aluminum**	30 - 180	381 - 503	381 - 472	290 - 335	0.15 - 0.30
N	**Brass**	30 - 100	290 - 411	274 - 381	229 - 335	0.13 - 0.23

Minimum Pilot Hole Diameter = Finish Diameter – C

Ex: To open an existing diameter hole to 69.85 mm diameter, an OP2 tool would be used. The minimum pilot hole diameter would be: **69.85 - 47.75 = 22.10**

Opening Drill Series	Drill Diameter Range	C
OP1	50.8 - 63.5	47.75
OP2	63.5 - 76.2	47.75
OP3	76.2 - 104.6	47.75
OP4	104.6 - 142.7	68.07

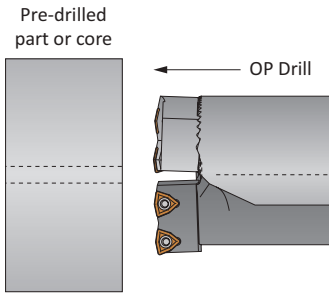

IMPORTANT: The speeds and feeds listed above are considered a general starting point for all applications. Factory technical assistance is available for your specific applications through our Application Engineering department.

Formulas and Constants | Metric (mm)

Material Constants

Type of Material	Hardness (BHN)	K_m (kPa)
Free-Machining Steel	100 - 250	5.17
Low-Carbon Steel	85 - 275	5.86
Medium-Carbon Steel	125 - 325	6.21
Alloy Steel	125 - 375	6.90
High-Strength Steel	225 - 400	7.93
Structural Steel	100 - 350	6.90
Tool Steel	150 - 250	6.21
High-Temperature Alloy	140 - 310	9.93
Titanium Alloy	140 - 310	4.97
Aerospace Alloy	185 - 350	4.48
Stainless Steel 400 Series	185 - 350	7.45
Stainless Steel 300 Series	135 - 275	6.48
Super Duplex Stainless Steel	135 - 275	6.48
Wear Plate	400 - 600	11.04
Hardened Steel	300 - 500	9.66
Nodular, Ductile Cast Iron	120 - 320	4.48
Grey Cast Iron	120 - 320	5.17
Cast Aluminum	30 - 180	2.76
Wrought Aluminum	30 - 180	2.76
Aluminum Bronze	100 - 250	3.45
Brass	100	2.41
Copper	60	2.07

Formulas

1. **RPM** $= (318.31 \bullet m/min) / DIA_F$

where:

RPM	= revolutions per minute (rev/min)
m/min	= speed (m/min)
DIA_F	= finish diameter of drill (mm)

2. **kW** $= ((DIA_F^2 - DIA_P^2) \bullet mm/rev \bullet RPM \bullet K_m) / 205{,}154$

where:

kW	= tool power (kW)
DIA_F	= finish diameter of drill (mm)
DIA_P	= pre-drill diameter (mm)
mm/rev	= feed rate (mm/rev)
RPM	= revolutions per minute (rev/min)
K_m	= specific cutting energy (kPa)
	machine efficiency (using 205,154 as constant)

3. **Thrust** $= 148.78 \bullet mm/rev \bullet (DIA_F - DIA_P) \bullet K_m$

where:

Thrust	= axial thrust (N)
IPR	= feed rate (mm/rev)
DIA_F	= finish diameter of drill (mm)
DIA_P	= predrill diameter (mm)
K_m	= specific cutting energy (kPa)

4. **Torque** $= (kW \bullet 9549.3) / RPM$

where:

Torque	= torque (Nm)
kW	= tool power (kW)
RPM	= revolutions per minute (rev/min)

The table and equations on this page are found in the *Machinery's Handbook*. Permission to simplify and print the equations is granted by the Editor of the *Machinery's Handbook*.

SECTION

A91

Structural Steel Solutions

Structural Steel Drilling Solutions

T-A® and GEN2 T-A® | GEN3SYS® XT Pro | 4TEX® Drill

- **T-A® and GEN2 T-A® Diameter Range:** 0.5512" - 1.8829" (14.00 mm - 47.82 mm)
- **GEN3SYS® XT Pro Diameter Range:** 0.4724" - 1.3780" (12.00 mm - 35.00 mm)
- **4TEX® Drill Diameter Range:** 0.472" - 1.562" (12.00 mm - 39.67 mm)*

*See the 4TEX Drill catalog (A55-4TX) for all diameters available.

Take on Tough Drilling

Allied Machine's structural steel drilling system is designed for maximum performance in structural steel materials and applications. These solutions utilize the T-A, GEN2 T-A, GEN3SYS XT Pro, and 4TEX drill designs and capabilities.

With multiple geometries and coatings, you're sure to find the solution that is right for you. Tough drilling is tough no more.

Excellent chip control	Improves hole quality and surface finish	Provides maximum durability and stability

Applicable Industries

Structural Steel

Your safety and the safety of others is very important. This catalog contains important safety messages. Always read and follow all safety precautions.

This triangle is a safety hazard symbol. It alerts you to potential safety hazards that can cause tool failure and serious injury.

When you see this symbol in the catalog, look for a related safety message that may be near this triangle or referred to in the nearby text.

There are safety signal words also used in the catalog. Safety messages follow these words.

WARNING

WARNING (shown above) means that failure to follow the precautions in this message could result in tool failure and serious injury.

NOTICE means that failure to follow the precautions in this message could result in damage to the tool or machine but not result in personal injury.

NOTE and **IMPORTANT** are also used. These are important that you read and follow but are not safety-related.

Visit www.alliedmachine.com for the most up-to-date information and procedures.

Reference Icons
The following icons will appear throughout the catalog to help you navigate between products.

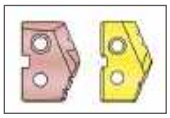

Corresponding T-A & GEN2 T-A Inserts
Refers to the corresponding T-A insert items that connect with each specific holder series

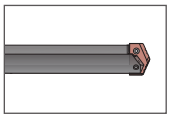

Corresponding T-A Holders
Refers to the corresponding T-A holder items that connect with each specific insert series

Setup / Assembly Information
Detailed instructions and information regarding the corresponding part(s)

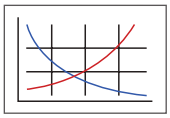

Recommended Cutting Data
Speed and feed recommendations for optimum and safe drilling

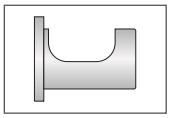

Eccentric Sleeves
Refers to the corresponding eccentric sleeve for the holder

Coolant-Through Option
Indicates that the product is coolant through

	T-A® and GEN2 T-A® Diameter Range	
Series	**Imperial (inch)**	**Metric (mm)**
0	0.5512 - 0.6959	14.00 - 17.67
1	0.6900 - 0.9609	17.53 - 24.40
2	0.9610 - 1.3809	24.41 - 35.06
3	1.3530 - 1.8829	34.37 - 47.82

	GEN3SYS® XT Pro Diameter Range	
Series	**Imperial (inch)**	**Metric (mm)**
12	0.4724 - 0.5117	12.00 - 12.99
13	0.5118 - 0.5511	13.00 - 13.99
14	0.5512 - 0.5905	14.00 - 14.99
15	0.5906 - 0.6298	15.00 - 15.99
16	0.6299 - 0.6692	16.00 - 16.99
17	0.6693 - 0.7086	17.00 - 17.99
18	0.7087 - 0.7873	18.00 - 19.99
20	0.7874 - 0.8660	20.00 - 21.99
22	0.8661 - 0.9448	22.00 - 23.99
24	0.9449 - 1.0235	24.00 - 25.99
26	1.0236 - 1.1416	26.00 - 28.99
29	1.1417 - 1.2597	29.00 - 31.99
32	1.2598 - 1.3780	32.00 - 35.00

	4TEX® Drill Diameter Range*	
Series	**Imperial (inch)**	**Metric (mm)**
03	0.472 - 0.512	12.00 - 13.00
04	0.551 - 0.591	14.00 - 15.00
05	0.625 - 0.709	15.88 - 18.00
06	0.748 - 0.827	19.00 - 21.00
07	0.866 - 1.024	22.00 - 26.00
09	1.063 -1.250	27.00 - 31.75
11	1.260 - 1.500	32.00 - 38.10
14	1.535 - 1.562	39.00 - 39.67

*See the 4TEX drill catalog (A55-4TX) for all diameters available.

Structural Steel Drilling Solutions Contents

T-A® and GEN2 T-A® Drilling System

T-A and GEN2 T-A System Overview . . . . . 2 - 4
Nomenclature 5
0 Series . . . . . 6 - 9
1 Series . . . . . 10 - 13
2 Series . . . . . 14 - 17
3 Series . . . . . 18 - 20
Deep Hole Drilling Guidelines 21

GEN3SYS® XT Pro System

GEN3SYS XT Pro System Overview 22
Product Nomenclature 23
12 - 13 Series . . . . . 24 - 25
14 - 15 Series . . . . . 26 - 27
16 - 17 Series . . . . . 28 - 29
18 - 20 Series . . . . . 30 - 31
22 - 24 Series . . . . . 32 - 33
26 - 29 Series . . . . . 34 - 35
32 Series 36

4TEX® Drill System

Safety Information 38
4TEX Overview . . . . . 39 - 42
Product Nomenclature 43
03 Series 44
04 Series 45
05 Series . . . . . 46 - 47
06 Series . . . . . 48 - 49
07 Series . . . . . 50 - 51
09 Series . . . . . 52 - 53
11 Series . . . . . 54 - 55
14 Series . . . . . 56 - 57
Eccentric Sleeves 58
Diameter Adjustment 59
Center Height Alignment . . . . . 60 - 61

Recommended Cutting Data

T-A and GEN2 T-A System . . . . . 62 - 63
GEN3SYS XT Pro System . . . . . 64 - 65
4TEX Drill System 66
4TEX Drill Insert Reccommendations | Troubleshooting 67

Structural Steel Drilling

Achieving Optimal Results in Structural Steel

Drilling in structural steel materials can be a difficult process, and achieving optimal results becomes a major issue. Allied Machine's structural steel drilling solutions have been specifically designed to produce the best results in the toughest materials. With solutions in both the T-A® and GEN3SYS® XT Pro product lines, you have multiple options to solve your application problems.

Insert Style Comparison

	GEN3SYS® XT Pro Structural Steel	T-A® Thin Wall	T-A® Notch Point®	T-A® 150° Structural Steel	GEN2 T-A® High Efficiency
High penetration	✓				
Material less than 7/16" thick		✓			
Material over 7/16" thick	✓		✓	✓	✓
Reduced exit burr			✓	✓	
Includes Notch Point® geometry			✓	✓	✓
Available from carbide	✓				✓
Stocked in common sizes for the structural steel industry	✓	✓	✓	✓	✓

Case Study Example

CASE STUDY

Project Profile:	Structural Steel I-Beam Construction
Tooling Solution:	T-A® Structural Steel Drilling System

The Problem:

Previously, the customer was using a competitor spade drill running at the following parameters:

- 650 RPM
- 0.010 IPR (0.25 mm/rev)
- 6.5 IPM (165.1 mm/min)

The tool drilled a 0.875" (22.23 mm) diameter hole to a 0.4375" (11.11 mm) depth. The drill had a tool life of **only 20 holes**.

The poor tool performance was brought to the attention of the technician, who was familiar with Allied Machine products. The following day, Allied Machine tooling was brought in for testing. The customer needed improvement in the tool life of the inserts.

The Solution:

Allied Machine recommended the T-A structural steel drilling system.

- **Insert** = 151A-0028-TW (#1 series T-A insert with TiAlN coating and thin wall geometry)
- **Holder** = 25010H-004IS052 (#1 series T-A holder with #4 Morse Taper shank and helical flute)

The tool ran at the following parameters:

- 440 RPM
- 0.010 IPR (0.25 mm/rev)
- 4.4 IPM (111.7 mm/min)

The tool achieved the desired diameter and depth. But most of all, the tool produced **1,500 holes**.

Summary:

The customer was able to take advantage of Allied Machine's vast experience in the structural steel drilling niche. Allied's wide variety of stocked solutions for specific customer problems allows for a remarkable increase in tool life.

The T-A structural steel drilling system defeated the competition, resulting in a **cost per hole savings of 89%** for the customer.

The **PROOF** is in the **NUMBERS**

Competitor Insert Tool Life
(number of holes = 20)

T-A Structural Steel Insert Tool Life
(number of holes = 1,500)

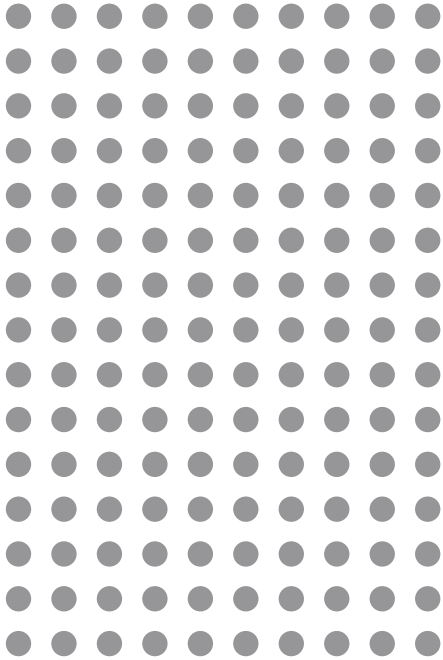

Overall ***SAVINGS*** of

89%

PREMIUM SOLUTION

T-A® and GEN2 T-A® Structural Steel Drilling System

STRUCTURAL STEEL **ENHANCEMENTS** T-A® & GEN2 T-A®

GEN2 T-A Insert

Available in AM300® and AM200® Coating

High Efficiency (-HE)

- Improves performance.
- Improves tool life.
- Improves chip formation in structural steel materials.

T-A Inserts

Available in AM200® and TiAlN Coatings

Thin Wall (-TW)

- Designed for drilling 7/16" thick or less I-beam or structural materials.
- Increases hole diameter tolerance.
- Improves hole roundness.
- Decreases material deflection.

Notch Point® (-NP)

- Provides excellent self-centering characteristics.
- Reduces bellmouth and tool lead-off.
- Reduces axial thrust requirements.

Structural Steel (-SS)

- Designed for drilling 7/16" thick or thicker I-beam or structural materials.
- Reduces exit burrs.
- Increases stability.
- Lowers drilling forces.
- Includes Notch Point® web geometry.

Holder Anatomy

1. Morse Taper Shank
2. Coolant Inlet
3. Flute (straight or helical)
4. Built-up Body Diameter
5. Coolant Outlets

Straight Flute

Helical Flute

T-A® and GEN2 T-A® Drill Nomenclature

T-A and GEN2 T-A Drill Inserts

4	5	3	H	–	0115	–	HE
1	2	3	4		5		6

1. Insert	2. Material	3. Series	4. Coating	5. Diameter	6. Geometry
1 = T-A	**5** = Super cobalt	**0** = 0 series	**P** = AM300®	**0017** = Inch	**TW** = Thin Wall
4 = GEN2 T-A	**C1** = C1 (K35) carbide	**1** = 1 series	**H** = AM200®	**0.515** = Decimal	**NP** = Notch Point®
		2 = 2 series	**A** = TiAlN	**13** = Metric	**SS** = Structural Steel
		3 = 3 series			**HE** = High Efficiency

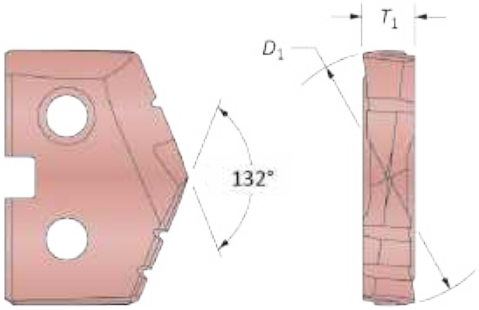

Reference Key

Symbol	Attribute
D_1	Insert diameter
T_1	Insert thickness

T-A Drill Holders

2	40	20	S	–	004	IS	060
1	2	3	4		5	6	7

1. Holder	2. Length	3. Series		4. Flute
2 = T-A holder	**20** = Short	**00** = 0 series	**20** = 2 series	**S** = Straight
	40 = Standard	**05** = 0.5 series	**25** = 2.5 series	**H** = Helical
	50 = Extended	**10** = 1 series	**30** = 3 series	
	60 = Long	**15** = 1.5 series		

5. Shank Designator	6. Shank Code	7. Minimum Insert Diameter
003 = 3MT	**IS** = Imperial Morse taper structural steel	In increments of 1/64 of an inch
004 = 4MT		In increments of 0.0156"

Reference Key

Symbol	Attribute	Symbol	Attribute
D_1	Drill insert range	L_4	Flute length
L_1	Overall length	P_1	Rear pipe tap
L_2	Drill depth	P_2	Side pipe tap
L_3*	Holder reference length	*MT*	Morse taper size

*L_3 is 0.063" (1.60 mm) shorter if using a structural steel holder with Notch Point®, GEN2 T-A®, or 150° structural steel T-A® drill insert geometry.

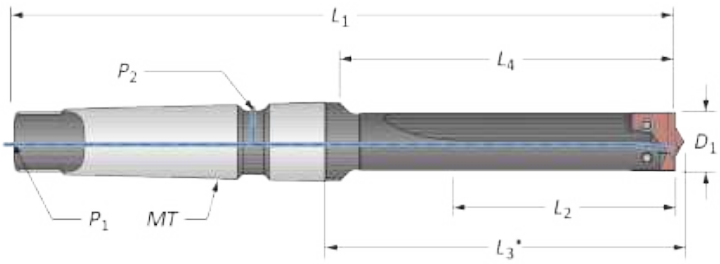

T-A® Structural Steel Drill Inserts

0 Series | Diameter Range: 0.5512" - 0.6959" (14.00 mm - 17.67 mm)

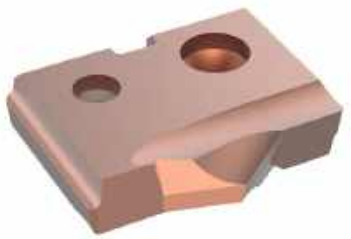

Thin Wall
For material up to 7/16" thick.

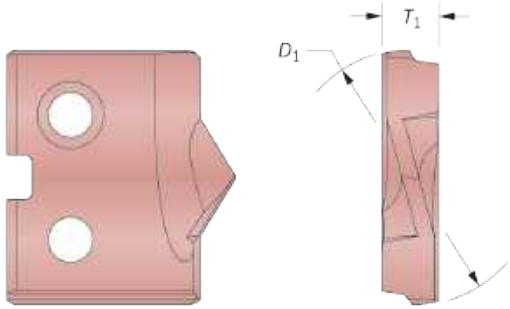

Notch Point®
For material over 7/16" thick.

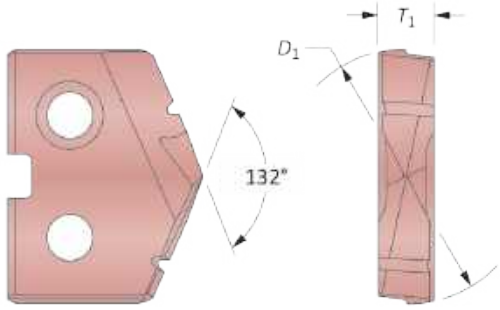

150° Structural Steel
For material over 7/16" thick
and for reduced exit burr.

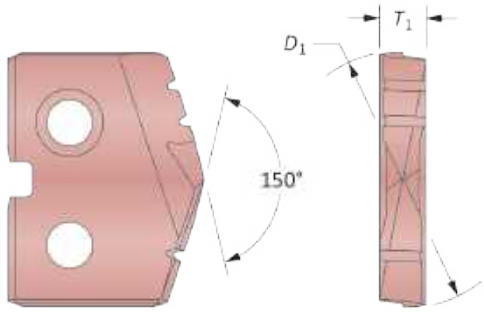

HSS Inserts – Super Cobalt

Series	Insert				Thin Wall		Notch Point®		150° Structural Steel	
	Fractional Equivalent	D_1 inch	D_1 mm	T_1	AM200® Part No.	TiAlN Part No.	AM200® Part No.	TiAlN Part No.	AM200® Part No.	TiAlN Part No.
0	–	0.5512	14.00	1/8	**150H-14-TW**	**150A-14-TW**	**150H-14-NP**	**150A-14-NP**	**150H-14-SS**	**150A-14-SS**
	9/16	0.5625	14.29	1/8	**150H-0018-TW**	**150A-0018-TW**	**150H-0018-NP**	**150A-0018-NP**	**150H-0018-SS**	**150A-0018-SS**
0.5	5/8	0.6250	15.88	1/8	**150H-0020-TW**	**150A-0020-TW**	**150H-0020-NP**	**150A-0020-NP**	**150H-0020-SS**	**150A-0020-SS**
	–	0.6299	16.00	1/8	**150H-16-TW**	**150A-16-TW**	**150H-16-NP**	**150A-16-NP**	**150H-16-SS**	**150A-16-SS**
	11/16	0.6875	17.46	1/8	**150H-0022-TW**	**150A-0022-TW**	**150H-0022-NP**	**150A-0022-NP**	**150H-0022-SS**	**150A-0022-SS**

A91: 62 - 63
Key on A91: 1
A91: 5
A91: 8 - 9

Inserts sold in multiples of 2.

GEN2 T-A® Structural Steel Drill Inserts

0 Series | Diameter Range: 0.5512" - 0.6959" (14.00 mm - 17.67 mm)

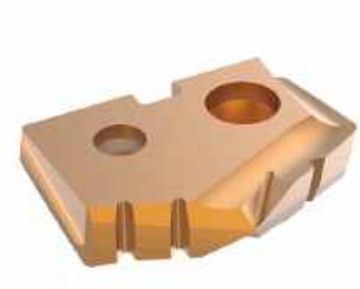

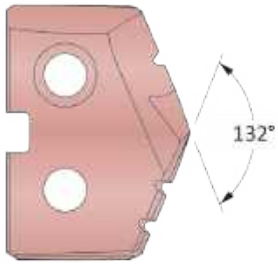

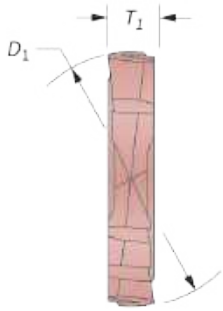

HSS Inserts – Super Cobalt | Carbide Inserts – C1 (K35)

Series	Insert				Part No.	
	Fractional Equivalent	D_1 inch	D_1 mm	T_1	Super Cobalt	C1 (K35)
0	–	0.5512	14.00	1/8	**450H-14-HE**	**4C10P-14-HE**
	9/16	0.5625	14.29	1/8	**450H-0018-HE**	**4C10P-0018-HE**
0.5	5/8	0.6250	15.88	1/8	**450H-0020-HE**	**4C10P-0020-HE**
	–	0.6299	16.00	1/8	**450H-16-HE**	**4C10P-16-HE**
	11/16	0.6875	17.46	1/8	**450H-0022-HE**	**4C10P-0022-HE**

A91: 62 - 63
A91: 5
A91: 8 - 9
Key on A91: 1

Inserts sold in multiples of 2.

T-A® Structural Steel Drill Insert Holders

0 Series | Taper Shank

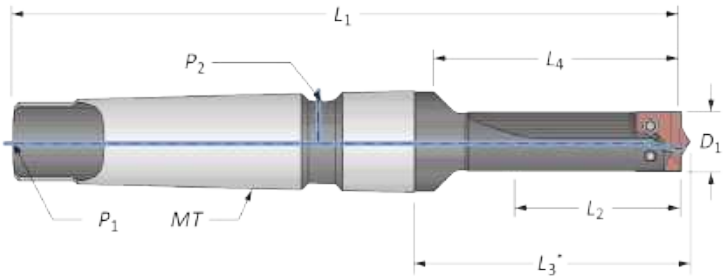

Straight Flute #3 Morse Taper

	Series	Length	D_1	Body L_2	Body L_4	Body L_3*	Body L_1	Shank MT	Shank P_1	Shank P_2	Part No.
i	0	Short	0.5625	1.201	2.281	2.358	6.156	#3	TTC	TSC	**22000S-003IS036**
	0.5	Short	0.6250	1.215	2.281	2.358	6.156	#3	TTC	TSC	**22005S-003IS040**
		Short	0.6875	1.204	2.281	2.358	6.156	#3	TTC	TSC	**22005S-003IS044**
m	0	Short	14.29	30.51	57.94	59.89	156.36	#3	TTC	TSC	**22000S-003IS036**
	0.5	Short	15.88	30.86	57.94	59.89	156.36	#3	TTC	TSC	**22005S-003IS040**
		Short	17.46	30.58	57.94	59.89	156.36	#3	TTC	TSC	**22005S-003IS044**

*L_3 is 0.063" (1.60 mm) shorter if using a structural steel holder with Notch Point®, GEN2 T-A®, or 150° structural steel T-A® drill insert geometry.

Connection Accessories

Series	Insert Screws	Nylon Locking Screws	Insert Driver	Preset Torque Hand Driver	Replacement Tips	Admissible Tightening Torque*
0	72556-IP8-1	72556N-IP8-1	8IP-8	8IP-8TL	8IP-8B	15.5 in-lbs (175 N-cm)
0.5	72567-IP8-1	72567N-IP8-1	8IP-8	8IP-8TL	8IP-8B	15.5 in-lbs (175 N-cm)

*Tightening torques are calculated with a friction coefficient of μ = 0.14 and develop 90% of ultimate yield strength.

A91: 5
Key on A91: 1
A91: 6 - 7

i = Imperial (in)
m = Metric (mm)
Screws sold in multiples of 10.

T-A® Structural Steel Drill Insert Holders

0 Series | Taper Shank

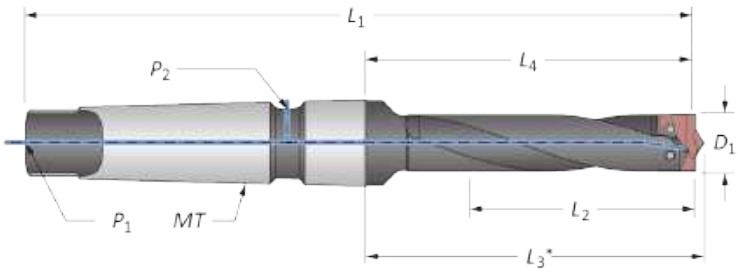

Helical Flute #3 Morse Taper

	Series	Length	D_1	Body L_2	Body L_4	Body L_3*	Body L_1	Shank MT	Shank P_1	Shank P_2	Part No.
i	0	Standard	0.5625	3.001	3.406	3.483	7.281	#3	TTC	TSC	**24000H-003IS036**
		Extended	0.5625	7.101	9.536	9.613	13.411	#3	TTC	TSC	⚠ **25000H-003IS036**
	0.5	Standard	0.6250	3.015	3.406	3.483	7.281	#3	TTC	TSC	**24005H-003IS040**
		Standard	0.6875	3.029	3.406	3.483	7.281	#3	TTC	TSC	**24005H-003IS044**
		Extended	0.6875	7.129	9.536	9.613	13.411	#3	TTC	TSC	⚠ **25005H-003IS044**
m	0	Standard	14.29	76.23	86.51	88.47	184.94	#3	TTC	TSC	**24000H-003IS036**
		Extended	14.29	180.37	242.21	244.17	340.64	#3	TTC	TSC	⚠ **25000H-003IS036**
	0.5	Standard	15.88	76.58	86.51	88.47	184.94	#3	TTC	TSC	**24005H-003IS040**
		Standard	17.46	76.94	86.51	88.47	184.94	#3	TTC	TSC	**24005H-003IS044**
		Extended	17.46	181.08	242.21	244.17	340.64	#3	TTC	TSC	⚠ **25005H-003IS044**

*L_3 is 0.063" (1.60 mm) shorter if using a structural steel holder with Notch Point®, GEN2 T-A®, or 150° structural steel T-A® drill insert geometry.

A91: 5
Key on A91: 1

A91: 6 - 7

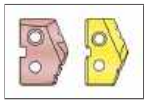

i = Imperial (in)
m = Metric (mm)
Screws sold in multiples of 10.

⚠ **WARNING** Refer to Speed and Feed charts for recommended adjustments to speeds and feeds. Refer to page A91: 21 for deep hole drilling guidelines in this section of the catalog. Visit **www.alliedmachine.com/DeepHoleGuidelines** for the most up-to-date information and procedures. Factory technical assistance is available for your specific applications through our Application Engineering Team. *ext:* **7611** | *email:* **appeng@alliedmachine.com**

T-A® Structural Steel Drill Inserts

1 Series | Diameter Range: 0.6900" - 0.9609" (17.53 mm - 24.40 mm)

Thin Wall
For material up to 7/16" thick.

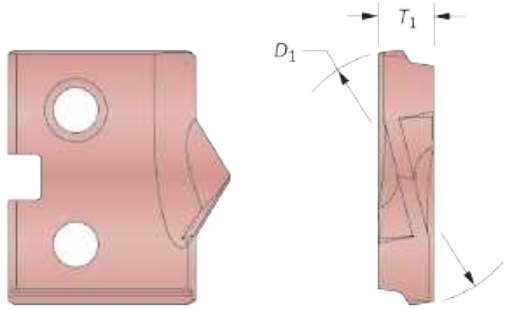

Notch Point®
For material over 7/16" thick.

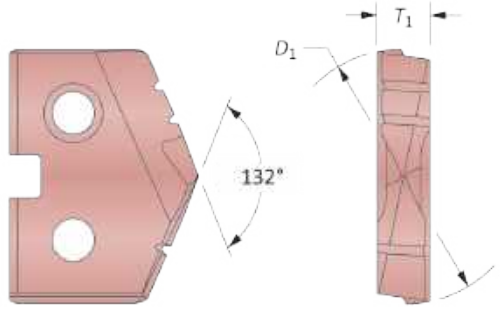

150° Structural Steel
For material over 7/16" thick
and for reduced exit burr.

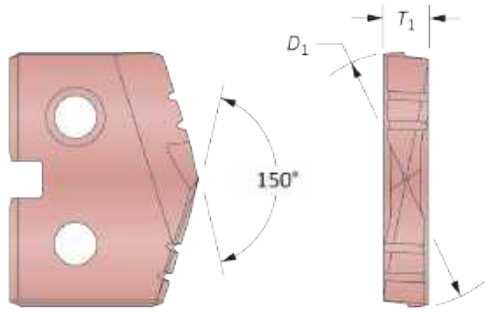

HSS Inserts – Super Cobalt

Series	Insert				Thin Wall		Notch Point®		150° Structural Steel	
	Fractional Equivalent	D_1 inch	D_1 mm	T_1	AM200® Part No.	TiAlN Part No.	AM200® Part No.	TiAlN Part No.	AM200® Part No.	TiAlN Part No.
1	–	0.7087	18.00	5/32	**151H-18-TW**	**151A-18-TW**	**151H-18-NP**	**151A-18-NP**	**151H-18-SS**	**151A-18-SS**
	13/16	0.8125	20.64	5/32	**151H-0026-TW**	**151A-0026-TW**	**151H-0026-NP**	**151A-0026-NP**	**151H-0026-SS**	**151A-0026-SS**
	–	0.8268	21.00	5/32	**151H-21-TW**	**151A-21-TW**	**151H-21-NP**	**151A-21-NP**	**151H-21-SS**	**151A-21-SS**
	–	0.8661	22.00	5/32	**151H-22-TW**	**151A-22-TW**	**151H-22-NP**	**151A-22-NP**	**151H-22-SS**	**151A-22-SS**
1.5	7/8	0.8750	22.23	5/32	**151H-0028-TW**	**151A-0028-TW**	**151H-0028-NP**	**151A-0028-NP**	**151H-0028-SS**	**151A-0028-SS**
	15/16	0.9375	23.81	5/32	**151H-0030-TW**	**151A-0030-TW**	**151H-0030-NP**	**151A-0030-NP**	**151H-0030-SS**	**151A-0030-SS**
	–	0.9449	24.00	5/32	**151H-24-TW**	**151A-24-TW**	**151H-24-NP**	**151A-24-NP**	**151H-24-SS**	**151A-24-SS**

A91: 62 - 63
Key on A91: 1
A91: 5
A91: 12 - 13

Inserts sold in multiples of 2.

GEN2 T-A® Structural Steel Drill Inserts

1 Series | Diameter Range: 0.6900" - 0.9609" (17.53 mm - 24.40 mm)

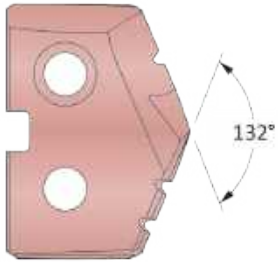

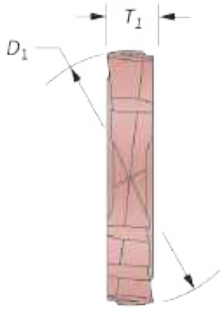

HSS Inserts – Super Cobalt | Carbide Inserts – C1 (K35)

Series	Insert				Part No.	
	Fractional Equivalent	D_1 inch	D_1 mm	T_1	Super Cobalt	C1 (K35)
1	–	0.7087	18.00	5/32	**451H-18-HE**	**4C11P-18-HE**
	13/16	0.8125	20.64	5/32	**451H-0026-HE**	**4C11P-0026-HE**
	–	0.8268	21.00	5/32	**451H-21-HE**	**4C11P-21-HE**
	–	0.8661	22.00	5/32	**451H-22-HE**	**4C11P-22-HE**
1.5	7/8	0.8750	22.23	5/32	**451H-0028-HE**	**4C11P-0028-HE**
	15/16	0.9375	23.81	5/32	**451H-0030-HE**	**4C11P-0030-HE**
	–	0.9449	24.00	5/32	**451H-24-HE**	**4C11P-24-HE**

A91: 62 - 63
A91: 5
A91: 12 - 13
Key on A91: 1

Inserts sold in multiples of 2.

T-A® Structural Steel Drill Insert Holders

1 Series | Taper Shank

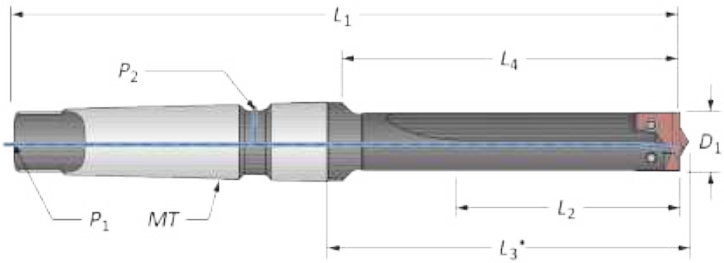

Straight Flute #3 Morse Taper

	Series	Length	D_1	Body L_2	Body L_4	Body L_3*	Body L_1	Shank MT	Shank P_1	Shank P_2	Part No.
i	1	Short	0.7031	2.558	3.954	4.078	7.829	#3	TTC	TSC	**22010S-003IS045**
		Short	0.8125	2.558	3.954	4.078	7.829	#3	TTC	TSC	**22010S-003IS052**
	1.5	Short	0.8750	2.572	3.954	4.078	7.829	#3	TTC	TSC	**22015S-003IS056**
		Short	0.9375	2.586	3.954	4.078	7.829	#3	TTC	TSC	**22015S-003IS060**
m	1	Short	17.86	64.97	100.43	103.58	198.86	#3	TTC	TSC	**22010S-003IS045**
		Short	20.64	64.97	100.43	103.58	198.86	#3	TTC	TSC	**22010S-003IS052**
	1.5	Short	22.23	65.33	100.43	103.58	198.86	#3	TTC	TSC	**22015S-003IS056**
		Short	23.81	65.68	100.43	103.58	198.86	#3	TTC	TSC	**22015S-003IS060**

*L_3 is 0.063" (1.60 mm) shorter if using a structural steel holder with Notch Point®, GEN2 T-A®, or 150° structural steel T-A® drill insert geometry.

Straight Flute #4 Morse Taper

	Series	Length	D_1	Body L_2	Body L_4	Body L_3*	Body L_1	Shank MT	Shank P_1	Shank P_2	Part No.
i	1	Short	0.7031	2.558	3.954	4.078	8.829	#4	TTC	TSC	**22010S-004IS045**
		Short	0.8125	2.558	3.954	4.078	8.829	#4	TTC	TSC	**22010S-004IS052**
	1.5	Short	0.8750	2.572	3.954	4.078	8.829	#4	TTC	TSC	**22015S-004IS056**
		Short	0.9375	2.586	3.954	4.078	8.829	#4	TTC	TSC	**22015S-004IS060**
m	1	Short	17.86	64.97	100.43	103.58	224.26	#4	TTC	TSC	**22010S-004IS045**
		Short	20.64	64.97	100.43	103.58	224.26	#4	TTC	TSC	**22010S-004IS052**
	1.5	Short	22.23	65.33	100.43	103.58	224.26	#4	TTC	TSC	**22015S-004IS056**
		Short	23.81	65.68	100.43	103.58	224.26	#4	TTC	TSC	**22015S-004IS060**

*L_3 is 0.063" (1.60 mm) shorter if using a structural steel holder with Notch Point®, GEN2 T-A®, or 150° structural steel T-A® drill insert geometry.

Connection Accessories

Series	Insert Screws	Nylon Locking Screws	Insert Driver	Preset Torque Hand Driver	Replacement Tips	Admissible Tightening Torque*
1	7375-IP9-1	7375N-IP9-1	8IP-9	8IP-9TL	8IP-9B	27.0 in-lbs (305 N-cm)
1.5	739-IP9-1	739N-IP9-1	8IP-9	8IP-9TL	8IP-9B	27.0 in-lbs (305 N-cm)

*Tightening torques are calculated with a friction coefficient of μ = 0.14 and develop 90% of ultimate yield strength.

A91: 5
Key on A91: 1
A91: 10 - 11

i = Imperial (in)
m = Metric (mm)
Screws sold in multiples of 10.

T-A® Structural Steel Drill Insert Holders

1 Series | Taper Shank

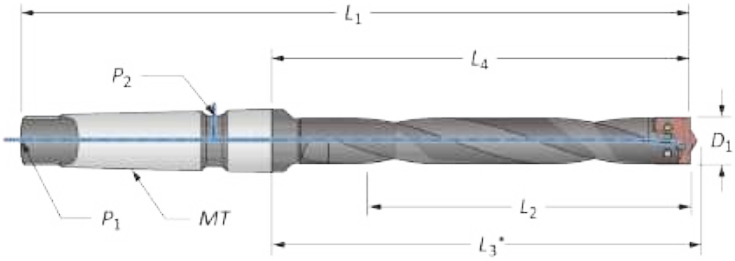

Helical Flute #3 Morse Taper

	Series	Length	D_1	Body L_2	Body L_4	Body L_3*	Body L_1	Shank MT	Shank P_1	Shank P_2	Part No.
i	1	Standard	0.7031	5.423	5.954	6.078	9.829	#3	TTC	TSC	24010H-003IS045
		Standard	0.8125	5.423	5.954	6.078	9.829	#3	TTC	TSC	24010H-003IS052
		Extended	0.7031	7.108	9.423	9.547	13.298	#3	TTC	TSC	⚠ 25010H-003IS045
		Extended	0.8125	7.108	9.423	9.547	13.298	#3	TTC	TSC	⚠ 25010H-003IS052
	1.5	Standard	0.8750	5.519	5.954	6.078	9.829	#3	TTC	TSC	24015H-003IS056
		Standard	0.9375	5.529	5.954	6.078	9.829	#3	TTC	TSC	24015H-003IS060
		Extended	0.9375	7.136	9.423	9.547	13.298	#3	TTC	TSC	⚠ 25015H-003IS060
m	1	Standard	17.86	137.74	151.23	154.38	249.66	#3	TTC	TSC	24010H-003IS045
		Standard	20.64	137.74	151.23	154.38	249.66	#3	TTC	TSC	24010H-003IS052
		Extended	17.86	180.54	239.34	242.49	337.77	#3	TTC	TSC	⚠ 25010H-003IS045
		Extended	20.64	180.54	239.34	242.49	337.77	#3	TTC	TSC	⚠ 25010H-003IS052
	1.5	Standard	22.23	140.18	151.23	154.38	249.66	#3	TTC	TSC	24015H-003IS056
		Standard	23.81	140.44	151.23	154.38	249.66	#3	TTC	TSC	24015H-003IS060
		Extended	23.81	181.25	239.34	242.49	337.77	#3	TTC	TSC	⚠ 25015H-003IS060

*L_3 is 0.063" (1.60 mm) shorter if using a structural steel holder with Notch Point®, GEN2 T-A®, or 150° structural steel T-A® drill insert geometry.

Helical Flute #4 Morse Taper

	Series	Length	D_1	Body L_2	Body L_4	Body L_3*	Body L_1	Shank MT	Shank P_1	Shank P_2	Part No.
i	1	Standard	0.7031	5.298	5.954	6.078	10.829	#4	TTC	TSC	24010H-004IS045
		Standard	0.8125	5.298	5.954	6.078	10.829	#4	TTC	TSC	24010H-004IS052
		Extended	0.8125	6.688	9.360	9.484	14.235	#4	TTC	TSC	⚠ 25010H-004IS052
		Long	0.8125	6.563	15.857	15.981	20.732	#4	TTC	TSC	⚠ 26010H-004IS052
	1.5	Standard	0.8750	5.371	5.954	6.078	10.829	#4	TTC	TSC	24015H-004IS056
		Standard	0.9375	5.411	5.954	6.078	10.829	#4	TTC	TSC	24015H-004IS060
		Extended	0.9375	6.816	9.360	9.484	14.235	#4	TTC	TSC	⚠ 25015H-004IS060
		Long	0.9375	6.816	15.889	16.013	20.764	#4	TTC	TSC	⚠ 26015H-004IS060
m	1	Standard	17.86	134.57	151.23	154.38	275.06	#4	TTC	TSC	24010H-004IS045
		Standard	20.64	134.57	151.23	154.38	275.06	#4	TTC	TSC	24010H-004IS052
		Extended	20.64	169.88	237.74	240.89	361.57	#4	TTC	TSC	⚠ 25010H-004IS052
		Long	20.64	166.7	402.77	405.92	526.59	#4	TTC	TSC	⚠ 26010H-004IS052
	1.5	Standard	22.23	136.42	151.23	154.38	275.06	#4	TTC	TSC	24015H-004IS056
		Standard	23.81	137.44	151.23	154.38	275.06	#4	TTC	TSC	24015H-004IS060
		Extended	23.81	173.13	237.74	240.89	361.57	#4	TTC	TSC	⚠ 25015H-004IS060
		Long	23.81	173.13	403.58	406.73	527.41	#4	TTC	TSC	⚠ 26015H-004IS060

*L_3 is 0.063" (1.60 mm) shorter if using a structural steel holder with Notch Point®, GEN2 T-A®, or 150° structural steel T-A® drill insert geometry.

A91: 5
Key on A91: 1

A91: 10 - 11

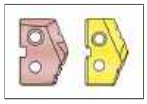

i = Imperial (in)
m = Metric (mm)
Screws sold in multiples of 10.

⚠ WARNING Refer to Speed and Feed charts for recommended adjustments to speeds and feeds. Refer to page A91: 21 for deep hole drilling guidelines in this section of the catalog. Visit **www.alliedmachine.com/DeepHoleGuidelines** for the most up-to-date information and procedures. Factory technical assistance is available for your specific applications through our Application Engineering Team. *ext:* **7611** | *email:* **appeng@alliedmachine.com**

T-A® Structural Steel Drill Inserts

2 Series | Diameter Range: 0.9610" - 1.3809" (24.41 mm - 35.06 mm)

Thin Wall
For material up to 7/16" thick.

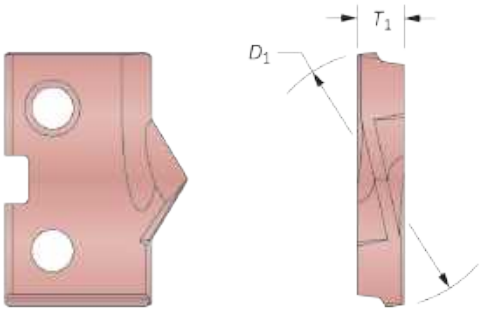

Notch Point®
For material over 7/16" thick.

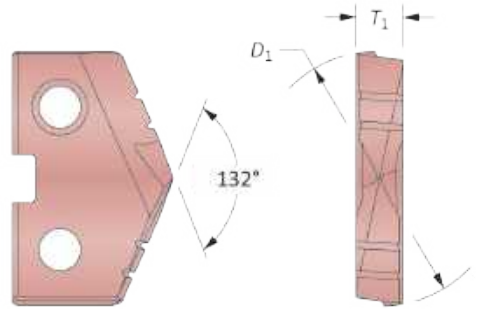

150° Structural Steel
For material over 7/16" thick
and for reduced exit burr.

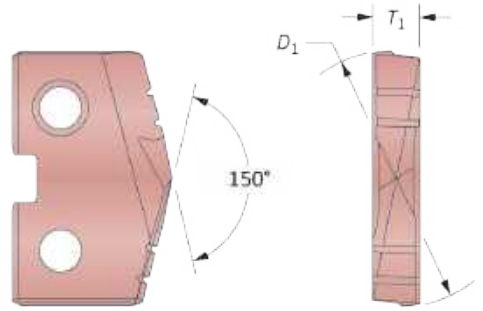

HSS Inserts – Super Cobalt

Series	Insert				Thin Wall		Notch Point®		150° Structural Steel	
	Fractional Equivalent	D_1 inch	D_1 mm	T_1	AM200® Part No.	TiAlN Part No.	AM200® Part No.	TiAlN Part No.	AM200® Part No.	TiAlN Part No.
2	1	1.0000	25.40	3/16	**152H-0100-TW**	**152A-0100-TW**	**152H-0100-NP**	**152A-0100-NP**	**152H-0100-SS**	**152A-0100-SS**
	–	1.0236	26.00	3/16	**152H-26-TW**	**152A-26-TW**	**152H-26-NP**	**152A-26-NP**	**152H-26-SS**	**152A-26-SS**
	1-1/16	1.0625	26.99	3/16	**152H-0102-TW**	**152A-0102-TW**	**152H-0102-NP**	**152A-0102-NP**	**152H-0102-SS**	**152A-0102-SS**
	–	1.0630	27.00	3/16	**152H-27-TW**	**152A-27-TW**	**152H-27-NP**	**152A-27-NP**	**152H-27-SS**	**152A-27-SS**
	1-1/8	1.1250	28.58	3/16	**152H-0104-TW**	**152A-0104-TW**	**152H-0104-NP**	**152A-0104-NP**	**152H-0104-SS**	**152A-0104-SS**
2.5	1-3/16	1.1875	30.16	3/16	**152H-0106-TW**	**152A-0106-TW**	**152H-0106-NP**	**152A-0106-NP**	**152H-0106-SS**	**152A-0106-SS**
	–	1.2205	31.00	3/16	**152H-31-TW**	**152A-31-TW**	**152H-31-NP**	**152A-31-NP**	**152H-31-SS**	**152A-31-SS**
	1-1/4	1.2500	31.75	3/16	**152H-0108-TW**	**152A-0108-TW**	**152H-0108-NP**	**152A-0108-NP**	**152H-0108-SS**	**152A-0108-SS**
	–	1.2992	33.00	3/16	**152H-33-TW**	**152A-33-TW**	**152H-33-NP**	**152A-33-NP**	**152H-33-SS**	**152A-33-SS**
	1-5/16	1.3125	33.34	3/16	**152H-0110-TW**	**152A-0110-TW**	**152H-0110-NP**	**152A-0110-NP**	**152H-0110-SS**	**152A-0110-SS**
	1-3/8	1.3750	34.93	3/16	**152H-0112-TW**	**152A-0112-TW**	**152H-0112-NP**	**152A-0112-NP**	**152H-0112-SS**	**152A-0112-SS**

A91: 62 - 63
Key on A91: 1
A91: 5
A91: 16 - 17

Inserts sold in multiples of 2.

GEN2 T-A® Structural Steel Drill Inserts

2 Series | Diameter Range: 0.9610" - 1.3809" (24.41 mm - 35.06 mm)

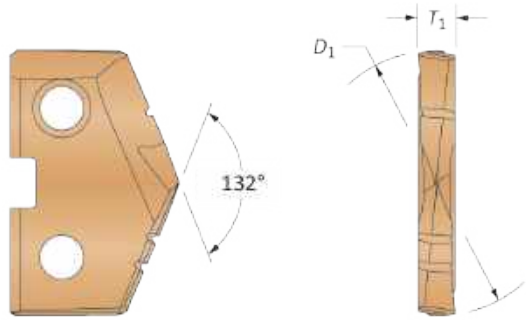

HSS Inserts – Super Cobalt | Carbide Inserts – C1 (K35)

Series	Insert				Part No.	
	Fractional Equivalent	D_1 inch	D_1 mm	T_1	Super Cobalt	C1 (K35)
2	1	1.0000	25.40	3/16	**452H-0100-HE**	**4C12P-0100-HE**
	–	1.0236	26.00	3/16	**452H-26-HE**	**4C12P-26-HE**
	1-1/16	1.0625	26.99	3/16	**452H-0102-HE**	**4C12P-0102-HE**
	–	1.0630	27.00	3/16	**452H-27-HE**	**4C12P-27-HE**
	1-1/8	1.1250	28.58	3/16	**452H-0104-HE**	**4C12P-0104-HE**
2.5	1-3/16	1.1875	30.16	3/16	**452H-0106-HE**	**4C12P-0106-HE**
	–	1.2205	31.00	3/16	**452H-31-HE**	**4C12P-31-HE**
	1-1/4	1.2500	31.75	3/16	**452H-0108-HE**	**4C12P-0108-HE**
	–	1.2992	33.00	3/16	**452H-33-HE**	**4C12P-33-HE**
	1-5/16	1.3125	33.34	3/16	**452H-0110-HE**	**4C12P-0110-HE**
	1-3/8	1.3750	34.93	3/16	**452H-0112-HE**	**4C12P-0112-HE**

A91: 62 - 63
A91: 5
A91: 16 - 17
Key on A91: 1

Inserts sold in multiples of 2.

T-A® Structural Steel Drill Insert Holders

2 Series | Taper Shank

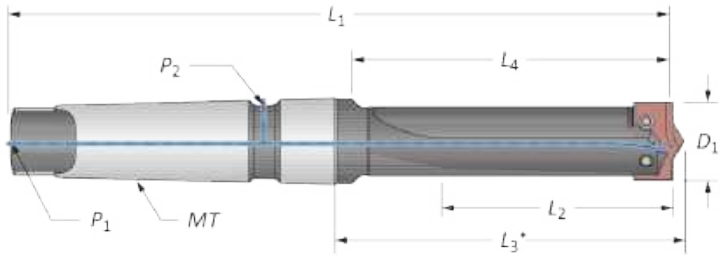

Straight Flute #4 Morse Taper

	Series	Length	D_1	Body L_2	Body L_4	Body L_3*	Body L_1	Shank MT	Shank P_1	Shank P_2	Part No.
i	2	Short	1.0000	3.211	4.574	4.725	9.449	#4	TTC	TSC	**22020S-004IS100**
i	2.5	Short	1.1875	3.253	4.574	4.725	9.449	#4	TTC	TSC	**22025S-004IS112**
m	2	Short	25.40	81.56	116.18	120.02	240.00	#4	TTC	TSC	**22020S-004IS100**
m	2.5	Short	30.16	82.63	116.18	120.02	240.00	#4	TTC	TSC	**22025S-004IS112**

*L_3 is 0.063" (1.60 mm) shorter if using a structural steel holder with Notch Point®, GEN2 T-A®, or 150° structural steel T-A® drill insert geometry.

Connection Accessories

Series	Insert Screws	Nylon Locking Screws	Insert Driver	Preset Torque Hand Driver	Replacement Tips	Admissible Tightening Torque*
2	7495-IP15-1	7495N-IP15-1	8IP-15	8IP-15TL	8IP-15B	61.0 in-lbs (690 N-cm)
2.5	7495-IP15-1	7495N-IP15-1	8IP-15	8IP-15TL	8IP-15B	61.0 in-lbs (690 N-cm)

*Tightening torques are calculated with a friction coefficient of μ = 0.14 and develop 90% of ultimate yield strength.

A91: 5 A91: 14 - 15

Key on A91: 1

i = Imperial (in)
m = Metric (mm)
Screws sold in multiples of 10.

T-A® Structural Steel Drill Insert Holders

2 Series | Taper Shank

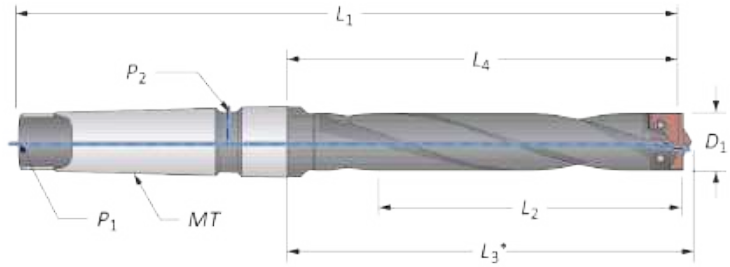

Helical Flute #3 Morse Taper

	Series	Length	D_1	Body L_2	Body L_4	Body L_3*	Body L_1	Shank MT	Shank P_1	Shank P_2	Part No.
i	2	Extended	1.0000	7.142	9.412	9.563	13.287	#3	TTC	TSC	⚠ 25020H-003IS100
m	2	Extended	25.4	181.41	239.06	242.9	337.49	#3	TTC	TSC	⚠ 25020H-003IS100

*L_3 is 0.063" (1.60 mm) shorter if using a structural steel holder with Notch Point®, GEN2 T-A®, or 150° structural steel T-A® drill insert geometry.

Helical Flute #4 Morse Taper

	Series	Length	D_1	Body L_2	Body L_4	Body L_3*	Body L_1	Shank MT	Shank P_1	Shank P_2	Part No.
i	2	Standard	1.0000	5.855	6.574	6.725	11.449	#4	TTC	TSC	24020H-004IS100
		Extended	1.0000	6.772	9.355	9.506	14.230	#4	TTC	TSC	⚠ 25020H-004IS100
		Long	1.0000	6.772	16.071	16.222	20.946	#4	TTC	TSC	⚠ 26020H-004IS100
	2.5	Standard	1.1875	5.855	6.574	6.725	11.449	#4	TTC	TSC	24025H-004IS112
m	2	Standard	25.40	148.72	166.98	170.82	290.80	#4	TTC	TSC	24020H-004IS100
		Extended	25.40	172.01	237.62	241.45	361.44	#4	TTC	TSC	⚠ 25020H-004IS100
		Long	25.40	172.01	408.20	412.04	532.03	#4	TTC	TSC	⚠ 26020H-004IS100
	2.5	Standard	30.16	148.72	166.98	170.82	290.80	#4	TTC	TSC	24025H-004IS112

*L_3 is 0.063" (1.60 mm) shorter if using a structural steel holder with Notch Point®, GEN2 T-A®, or 150° structural steel T-A® drill insert geometry.

A91: 5
Key on A91: 1
A91: 14 - 15

i = Imperial (in)
m = Metric (mm)
Screws sold in multiples of 10.

⚠ WARNING Refer to Speed and Feed charts for recommended adjustments to speeds and feeds. Refer to page A91: 21 for deep hole drilling guidelines in this section of the catalog. Visit **www.alliedmachine.com/DeepHoleGuidelines** for the most up-to-date information and procedures. Factory technical assistance is available for your specific applications through our Application Engineering Team. *ext:* **7611** | *email:* **appeng@alliedmachine.com**

T-A® Structural Steel Drill Inserts

3 Series | Diameter Range: 1.3530" - 1.8829" (34.37 mm - 47.82 mm)

Thin Wall
For material up to 7/16" thick.

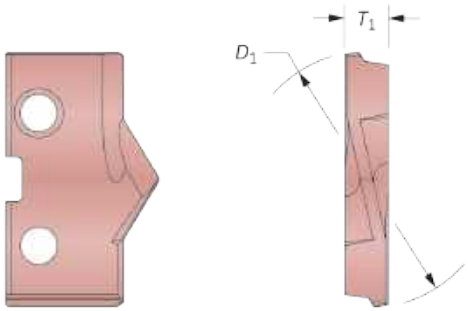

Notch Point®
For material over 7/16" thick.

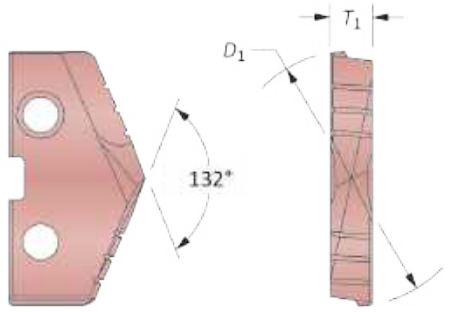

150° Structural Steel
For material over 7/16" thick
and for reduced exit burr.

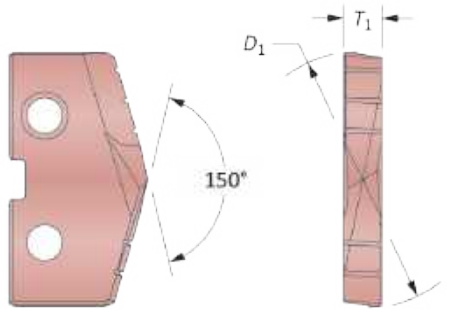

HSS Inserts – Super Cobalt

Insert				Thin Wall		Notch Point®		150° Structural Steel	
Fractional Equivalent	D_1 inch	D_1 mm	T_1	AM200® Part No.	TiAlN Part No.	AM200® Part No.	TiAlN Part No.	AM200® Part No.	TiAlN Part No.
1-7/16	1.4375	36.51	1/4	**153H-0114-TW**	**153A-0114-TW**	**153H-0114-NP**	**153A-0114-NP**	**153H-0114-SS**	**153A-0114-SS**
1-1/2	1.5000	38.10	1/4	**153H-0116-TW**	**153A-0116-TW**	**153H-0116-NP**	**153A-0116-NP**	**153H-0116-SS**	**153A-0116-SS**
–	1.5354	39.00	1/4	**153H-39-TW**	**153A-39-TW**	**153H-39-NP**	**153A-39-NP**	**153H-39-SS**	**153A-39-SS**
1-9/16	1.5625	39.69	1/4	**153H-0118-TW**	**153A-0118-TW**	**153H-0118-NP**	**153A-0118-NP**	**153H-0118-SS**	**153A-0118-SS**

A91: 62 - 63
Key on A91: 1
A91: 5
A91: 20

Inserts sold in multiples of 1.

GEN2 T-A® Structural Steel Drill Inserts

3 Series | Diameter Range: 1.3530" - 1.8829" (34.37 mm - 47.82 mm)

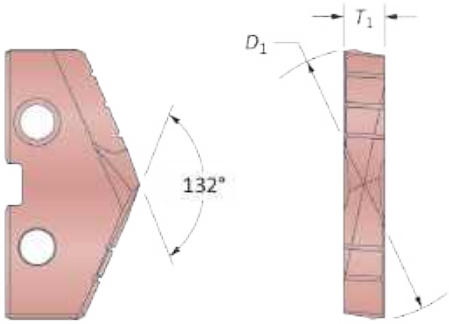

HSS Inserts – Super Cobalt

Insert				Part No.
Fractional Equivalent	D_1 inch	D_1 mm	T_1	Super Cobalt
1-7/16	1.4375	36.51	1/4	**453H-0114-HE**
1-1/2	1.5000	38.10	1/4	**453H-0116-HE**
–	1.5354	39.00	1/4	**453H-39-HE**
1-9/16	1.5625	39.69	1/4	**453H-0118-HE**

A91: 62 - 63
Key on A91: 1
A91: 5
A91: 20

Inserts sold in multiples of 1.

T-A® Structural Steel Drill Insert Holders

3 Series | Taper Shank

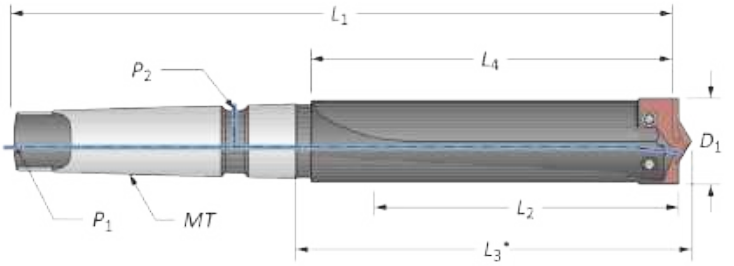

Straight Flute #4 Morse Taper

			Body				Shank			
	Length	D_1	L_2	L_4	L_3*	L_1	MT	P_1	P_2	Part No.
i	Short	1.4063	4.441	6.037	6.250	10.912	#4	TTC	TSC	**22030S-004IS126**

*L_3 is 0.063" (1.60 mm) shorter if using a structural steel holder with Notch Point®, GEN2 T-A®, or 150° structural steel T-A® drill insert geometry.

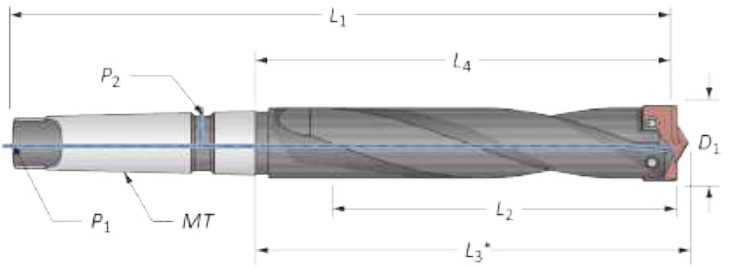

Helical Flute #4 Morse Taper

			Body				Shank			
	Length	D_1	L_2	L_4	L_3*	L_1	MT	P_1	P_2	Part No.
i	Standard	1.4063	7.118	7.787	8.000	12.662	#4	TTC	TSC	**24030H-004IS126**

*L_3 is 0.063" (1.60 mm) shorter if using a structural steel holder with Notch Point®, GEN2 T-A®, or 150° structural steel T-A® drill insert geometry.

Connection Accessories

Insert Screws	Nylon Locking Screws	Insert Driver	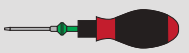 Preset Torque Hand Driver	Replacement Tips	Admissible Tightening Torque*
7514-IP20-1	7514N-IP20-1	8IP-20	–	–	121.3 in-lbs (1370 N-cm)

*Tightening torques are calculated with a friction coefficient of μ = 0.14 and develop 90% of ultimate yield strength.

A91: 5
Key on A91: 1
A91: 18 - 19

i = Imperial (in)
m = Metric (mm)
Screws sold in multiples of 10.

Deep Hole Drilling Guidelines

For Use with Drills Greater than 9xD (Extended, Long, XL, 3XL, and Special Length)

1. Pilot Hole
100 % RPM
100% IPR (mm/rev)

Establish the pilot hole using the same diameter short drill to a depth of 2xD minimum.
Utilize a pilot drill with the same or larger included point angle.

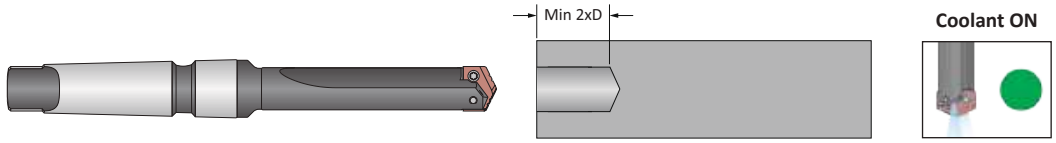

2. Feed-in
50 RPM max
12 IPM (300 mm/min)

Feed the longer drill within 1/16" (1.5 mm) short of the established pilot hole bottom at a **maximum of 50 RPM** and 12 IPM (300 mm/min) feed rate.

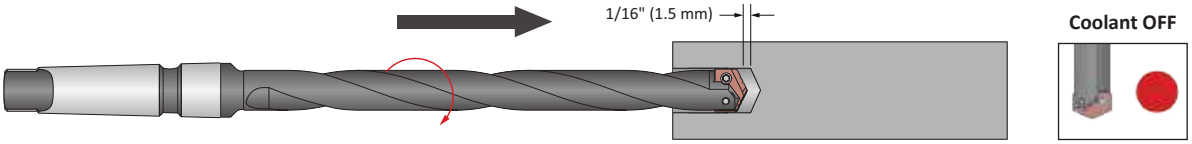

3. Deep Hole Transition Drilling
50 % RPM
75% IPR (mm/rev)

Drill additional 1xD past the bottom of the pilot hole at 50% reduction of recommended speed and 25% reduction of recommended feed.
Minimum of 1 second dwell is required to meet full speed before feeding.

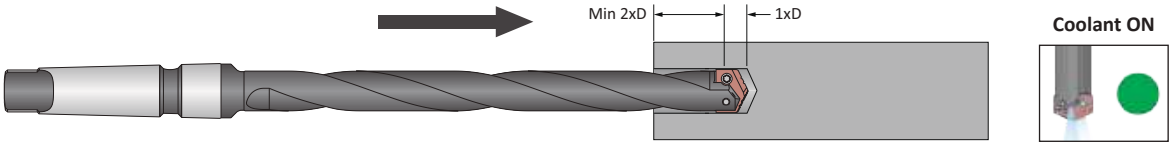

4. Deep Hole Drilling - Blind
100% RPM
100% IPR (mm/rev)

Drill to full depth at recommended speed and feed for longer drill according to Allied speed and feed charts.
No peck cycle recommended.

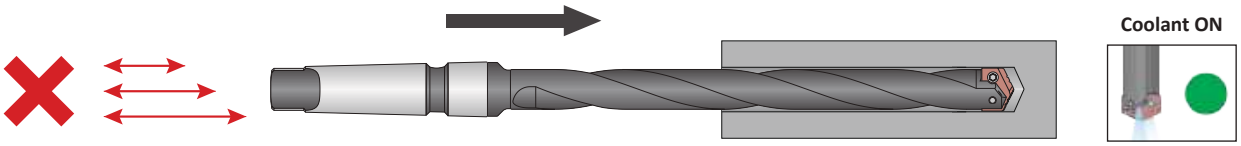

5. Deep Hole Drilling - at Breakout
50% RPM
75% IPR (mm/rev)

For through holes only:
Reduce speed by 50% and feed by 25% prior to breakout.
Do not break out more than 1/8" (3 mm) past the full diameter of the drill.

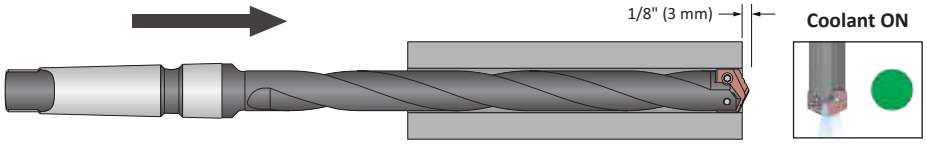

6. Drill Retract
50 RPM max

Reduce speed to a **maximum of 50 RPM** before retracting from the hole.

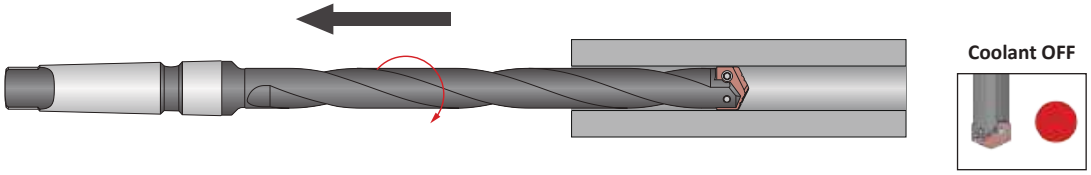

WARNING **Tool failure can cause serious injury. To prevent:**
- When using holders without support bushing, use a short T-A® holder to establish an initial hole that is a minimum of 2 diameters deep.
- Do not rotate tool holders more than 50 RPM unless it is engaged with the workpiece or fixture.

Visit **www.alliedmachine.com/DeepHoleGuidelines** for the most up-to-date information and procedures. Factory technical assistance is available for your specific applications through our Application Engineering Team. *ext:* **7611** | *email:* **appeng@alliedmachine.com**

GEN3SYS® XT Pro Structural Steel Drilling System

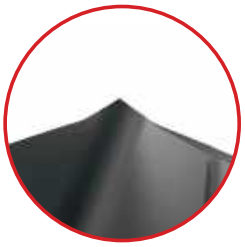

New Point Design
Increases stability without hindering penetration

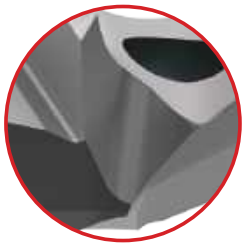

Redesigned Insert
Provides consistent performance and adds durability

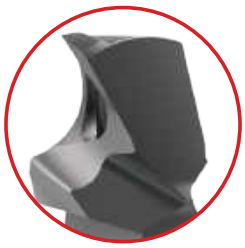

Improved Geometry
Extends tool life and increases insert strength without increasing horsepower consumption

AM420

AM420 Coating
Increases heat threshold and extends tool life

1.5xD 3xD 5xD 7xD

Get the Consistency You Need

The challenge of drilling structural steel materials is about to get easier. Developed through a rigorous and thorough testing process, the modified and improved XTST insert is a product of innovation.

Achieve the ***consistent performance*** you need while matching or even exceeding your current parameters.

Tough Drilling is Tough No More

Structural steel applications can prove to be difficult to machine, so you need a drill that's been put through the fire to ensure it can conquer those challenging applications.

Rigorous testing and countless hours of design and programming make the XT Pro structural steel insert the optimal drill for structural steel applications.

- Diameter range: 0.4724" - 1.3780" (12.00 mm - 35.00 mm).
- Holders available in 1.5xD, 3xD, 5xD, and 7xD lengths.
- Flanged shank with flat.

NOTICE: Structural steel GEN3SYS holders are specifically designed to be used only with GEN3SYS XT Pro structural steel geometry inserts. Using other GEN3SYS XT or XT Pro insert geometries in these holders could lead to chip packing and tool failure.
Contact Application Engineering for questions regarding proper use of tools. *ext:* **7611** | *email:* **appeng@alliedmachine.com**

GEN3SYS® XT Pro Drill Nomenclature

GEN3SYS XT Pro Drill Inserts

XT	ST	20	–	20.00
1	2	3		4

1. XT Pro Drill Insert	2. Geometry	3. Series			4. Diameter (mm)
XT = XT Pro insert	**ST** = Structural Steel	**12** = 12 series	**17** = 17 series	**26** = 26 series	For complete list of diameter ranges by series, see contents page.
		13 = 13 series	**18** = 18 series	**29** = 29 series	
		14 = 14 series	**20** = 20 series	**32** = 32 series	
		15 = 15 series	**22** = 22 series		
		16 = 16 series	**24** = 24 series		

Reference Key

Symbol	Attribute
D_1	Insert diameter

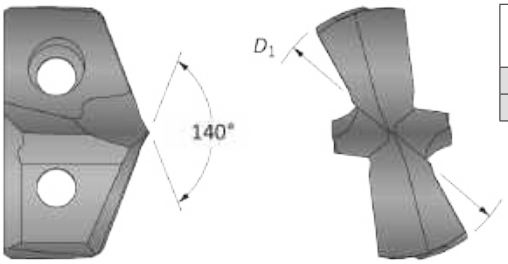

Sizes not shown are available upon request. When ordering, please follow the example below:	
Imperial:	0.7913", 20 series = use Part No. **XTST20-20.10**
Metric:	20.10 mm, 20 series = use Part No. **XTST20-20.10**

GEN3SYS XT Structural Steel Drill Holders

ST	03	12	0	–	20	FM
1	2	3	4		5	6

1. Holder	2. Length	3. Series			4. Body Diameter
ST = Structural steel holder	**01** = 1.5xD	**12** = 12 series	**17** = 17 series	**26** = 26 series	**0** = Standard
	03 = 3xD	**13** = 13 series	**18** = 18 series	**29** = 29 series	**5** = Oversized
	05 = 5xD	**14** = 14 series	**20** = 20 series	**32** = 32 series	
	07 = 7xD	**15** = 15 series	**22** = 22 series		
		16 = 16 series	**24** = 24 series		

5. Shank Diameter			
Imperial (in)		**Metric (mm)**	
063 = 5/8"	**125** = 1-1/4"	**16** = 16 mm	**32** = 32 mm
075 = 3/4"	**150** = 1-1/2"	**20** = 20 mm	**40** = 40 mm
100 = 1"		**25** = 25 mm	

6. Shank Style
F = Flanged with flat
FM = Flanged metric with flat
C = Cylindrical (no flat)
CM = Cylindrical metric (no flat)

Reference Key

Symbol	Attribute
D_2	Shank diameter
L_1	Overall length
L_2	Drill depth
L_3	Holder reference length
L_4	Holder body length
L_7	Shank length
P_1	Rear pipe tap

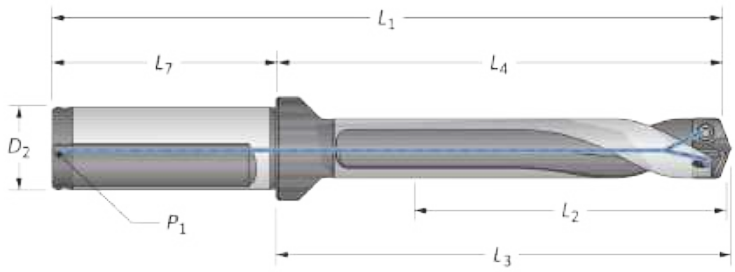

GEN3SYS® XT Pro Structural Steel Drilling System

12 Series | Diameter Range: 0.4724" - 0.5117" (12.00 mm - 12.99 mm)

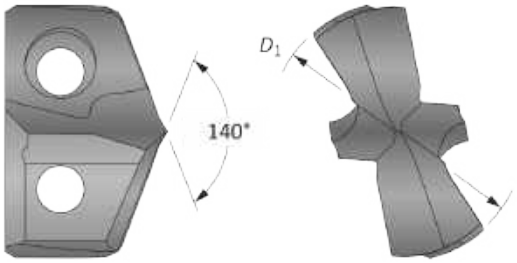

Inserts

Insert			
Fractional Equivalent	D_1 inch	D_1 mm	XTST Part No.
–	0.4724	12.00	**XTST12-12.00**

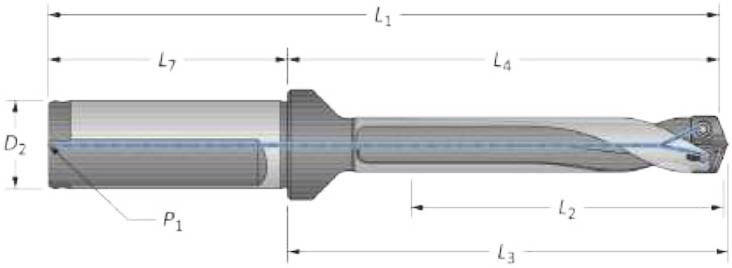

Holders

	Length	Body L_2	Body L_4	Body L_3	Body L_1	Shank L_7	Shank D_2	Shank P_1	Shank Flat	Part No.
i	1.5xD	0.766	1.859	1.938	3.891	2.031	3/4	1/8 NPT	YES	**ST01120-075F**
i	3xD	1.531	2.625	2.703	4.656	2.031	3/4	1/8 NPT	YES	**ST03120-075F**
i	5xD	2.563	3.641	3.734	5.672	2.031	3/4	1/8 NPT	YES	**ST05120-075F**
i	7xD	3.578	4.672	4.750	6.688	2.031	3/4	1/8 NPT	YES	**ST07120-075F**
m	1.5xD	19.5	47.1	49.3	97.1	50.0	20	1/8 BSPT	YES	**ST01120-20FM**
m	3xD	39.0	66.6	68.8	116.6	50.0	20	1/8 BSPT	YES	**ST03120-20FM**
m	5xD	65.0	92.6	94.8	142.6	50.0	20	1/8 BSPT	YES	**ST05120-20FM**
m	7xD	90.9	118.5	120.8	168.6	50.0	20	1/8 BSPT	YES	**ST07120-20FM**

Connection Accessories

Insert Screws	Nylon Locking Screws	Insert Driver	Preset Torque Hand Driver	Replacement Tips	Admissible Tightening Torque*
7247-IP7-1	7247N-IP7-1	8IP-7	8IP-7TL	8IP-7B	7.4 in-lbs (84 N-cm)

*Tightening torques are calculated with a friction coefficient of μ = 0.14 and develop 90% of ultimate yield strength.

A91: 64 - 65
Key on A91: 1

A91: 23

i = Imperial (in)
m = Metric (mm)

Inserts sold in multiples of 1 | Screws sold in multiples of 10.

NOTICE: Structural steel GEN3SYS holders are specifically designed to be used only with GEN3SYS XT Pro structural steel geometry inserts. Using other GEN3SYS XT or XT Pro insert geometries in these holders could lead to chip packing and tool failure.
Contact Application Engineering for questions regarding proper use of tools. *ext:* **7611** | *email:* **appeng@alliedmachine.com**

GEN3SYS® XT Pro Structural Steel Drilling System

13 Series | Diameter Range: 0.5118" - 0.5511" (13.00 mm - 13.99 mm)

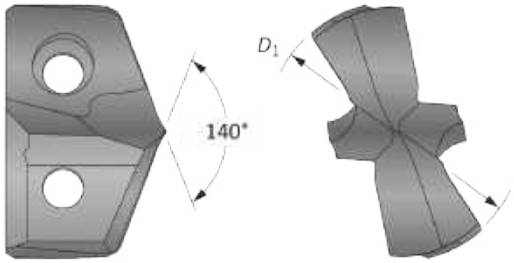

Inserts

Insert			
Fractional Equivalent	D_1 inch	D_1 mm	XTST Part No.
–	0.5118	13.00	**XTST13-13.00**

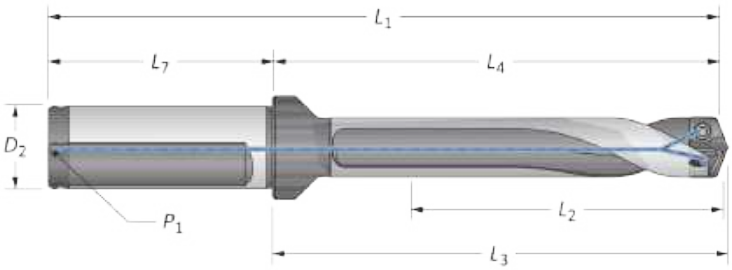

Holders

	Length	Body L_2	Body L_4	Body L_3	Body L_1	Shank L_7	Shank D_2	Shank P_1	Shank Flat	Part No.
i	1.5xD	0.828	1.891	1.984	3.922	2.031	3/4	1/8 NPT	YES	**ST01130-075F**
	3xD	1.656	2.719	2.813	4.750	2.031	3/4	1/8 NPT	YES	**ST03130-075F**
	5xD	2.750	3.828	3.906	5.859	2.031	3/4	1/8 NPT	YES	**ST05130-075F**
	7xD	3.859	4.938	5.031	6.969	2.031	3/4	1/8 NPT	YES	**ST07130-075F**
m	1.5xD	21.1	48.1	50.3	99.7	50.0	20	1/8 BSPT	YES	**ST01130-20FM**
	3xD	42.1	69.1	71.3	120.7	50.0	20	1/8 BSPT	YES	**ST03130-20FM**
	5xD	69.9	97.2	99.4	148.8	50.0	20	1/8 BSPT	YES	**ST05130-20FM**
	7xD	97.9	125.4	127.6	177.0	50.0	20	1/8 BSPT	YES	**ST07130-20FM**

Connection Accessories

Insert Screws	Nylon Locking Screws	Insert Driver	Preset Torque Hand Driver	Replacement Tips	Admissible Tightening Torque*
7247-IP7-1	7247N-IP7-1	8IP-7	8IP-7TL	8IP-7B	7.4 in-lbs (84 N-cm)

*Tightening torques are calculated with a friction coefficient of μ = 0.14 and develop 90% of ultimate yield strength.

A91: 64 - 65
Key on A91: 1
A91: 23

i = Imperial (in)
m = Metric (mm)

Inserts sold in multiples of 1. | Screws sold in multiples of 10.

NOTICE: Structural steel GEN3SYS holders are specifically designed to be used only with GEN3SYS XT Pro structural steel geometry inserts. Using other GEN3SYS XT or XT Pro insert geometries in these holders could lead to chip packing and tool failure.
Contact Application Engineering for questions regarding proper use of tools. *ext:* **7611** | *email:* **appeng@alliedmachine.com**

GEN3SYS® XT Pro Structural Steel Drilling System

14 Series | Diameter Range: 0.5512" - 0.5905" (14.00 mm - 14.99 mm)

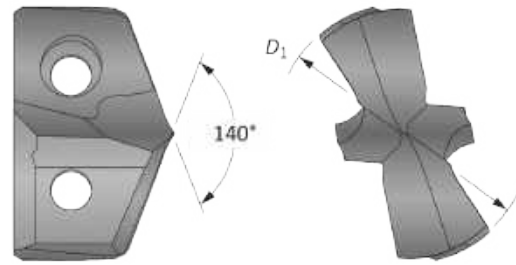

Inserts

Insert			
Fractional Equivalent	D_1 inch	D_1 mm	XTST Part No.
–	0.5512	14.00	**XTST14-14.00**
9/16	0.5626	14.29	**XTST14-14.29**

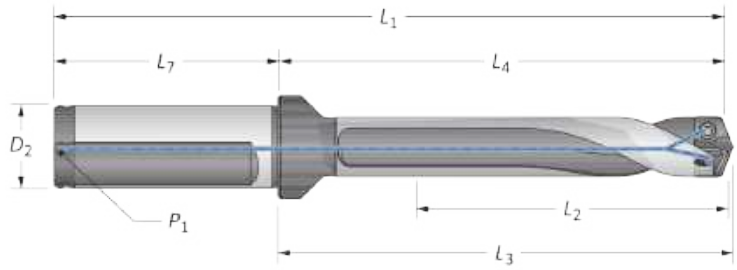

Holders

	Length	Body L_2	Body L_4	Body L_3	Body L_1	Shank L_7	Shank D_2	Shank P_1	Shank Flat	Part No.
i	1.5xD	0.906	1.953	2.063	3.984	2.031	3/4	1/8 NPT	YES	**ST01140-075F**
i	3xD	1.781	2.844	2.953	4.875	2.031	3/4	1/8 NPT	YES	**ST03140-075F**
i	5xD	2.953	4.031	4.125	6.063	2.031	3/4	1/8 NPT	YES	**ST05140-075F**
i	7xD	4.141	5.203	5.313	7.234	2.031	3/4	1/8 NPT	YES	**ST07140-075F**
m	1.5xD	22.5	49.9	52.5	99.9	50.0	20	1/8 BSPT	YES	**ST01140-20FM**
m	3xD	45.0	72.4	75.0	122.4	50.0	20	1/8 BSPT	YES	**ST03140-20FM**
m	5xD	75.0	102.4	104.9	152.4	50.0	20	1/8 BSPT	YES	**ST05140-20FM**
m	7xD	104.9	132.3	134.9	182.3	50.0	20	1/8 BSPT	YES	**ST07140-20FM**

Connection Accessories

Insert Screws	Nylon Locking Screws	Insert Driver	Preset Torque Hand Driver	Replacement Tips	Admissible Tightening Torque*
7247-IP7-1	7247N-IP7-1	8IP-7	8IP-7TL	8IP-7B	7.4 in-lbs (84 N-cm)

*Tightening torques are calculated with a friction coefficient of μ = 0.14 and develop 90% of ultimate yield strength.

A91: 64 - 65
Key on A91: 1
A91: 23

i = Imperial (in)
m = Metric (mm)

Inserts sold in multiples of 1. | Screws sold in multiples of 10.

NOTICE: Structural steel GEN3SYS holders are specifically designed to be used only with GEN3SYS XT Pro structural steel geometry inserts. Using other GEN3SYS XT or XT Pro insert geometries in these holders could lead to chip packing and tool failure.
Contact Application Engineering for questions regarding proper use of tools. *ext:* **7611** | *email:* **appeng@alliedmachine.com**

GEN3SYS® XT Pro Structural Steel Drilling System

15 Series | Diameter Range: 0.5906" - 0.6298" (15.00 mm - 15.99 mm)

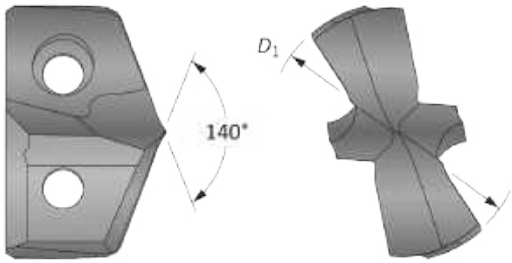

Inserts

Insert			
Fractional Equivalent	D_1 inch	D_1 mm	XTST Part No.
	0.5906	15.00	**XTST15-15.00**
5/8	0.6252	15.88	**XTST15-15.88**

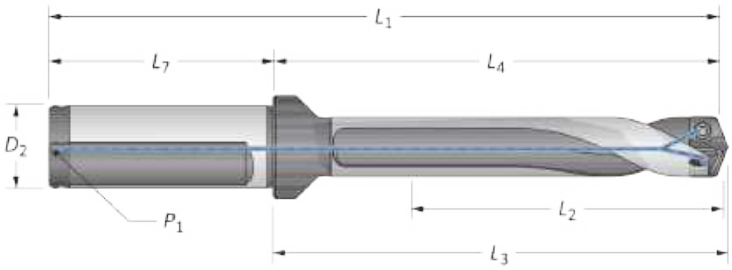

Holders

		Body				Shank				
	Length	L_2	L_4	L_3	L_1	L_7	D_2	P_1	Flat	Part No.
i	1.5xD	0.953	2.016	2.109	4.047	2.031	3/4	1/8 NPT	YES	**ST01150-075F**
i	3xD	1.891	2.953	3.047	4.984	2.031	3/4	1/8 NPT	YES	**ST03150-075F**
i	5xD	3.156	4.219	4.313	6.234	2.031	3/4	1/8 NPT	YES	**ST05150-075F**
i	7xD	4.422	5.469	5.578	7.500	2.031	3/4	1/8 NPT	YES	**ST07150-075F**
m	1.5xD	24.0	51.1	53.6	101.1	50.0	20	1/8 BSPT	YES	**ST01150-20FM**
m	3xD	48.0	75.1	77.6	125.1	50.0	20	1/8 BSPT	YES	**ST03150-20FM**
m	5xD	80.0	107.0	109.6	157.0	50.0	20	1/8 BSPT	YES	**ST05150-20FM**
m	7xD	111.9	139.0	141.6	189.0	50.0	20	1/8 BSPT	YES	**ST07150-20FM**

Connection Accessories

Insert Screws	Nylon Locking Screws	Insert Driver	Preset Torque Hand Driver	Replacement Tips	Admissible Tightening Torque*
7247-IP7-1	7247N-IP7-1	8IP-7	8IP-7TL	8IP-7B	7.4 in-lbs (84 N-cm)

*Tightening torques are calculated with a friction coefficient of μ = 0.14 and develop 90% of ultimate yield strength.

A91: 64 - 65

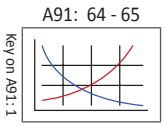

Key on A91: 1

A91: 23

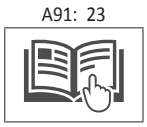

i = Imperial (in)
m = Metric (mm)

Inserts sold in multiples of 1. | Screws sold in multiples of 10.

NOTICE: Structural steel GEN3SYS holders are specifically designed to be used only with GEN3SYS XT Pro structural steel geometry inserts. Using other GEN3SYS XT or XT Pro insert geometries in these holders could lead to chip packing and tool failure.
Contact Application Engineering for questions regarding proper use of tools. *ext:* **7611** | *email:* **appeng@alliedmachine.com**

GEN3SYS® XT Pro Structural Steel Drilling System

16 Series | Diameter Range: 0.6299" - 0.6692" (16.00 mm - 16.99 mm)

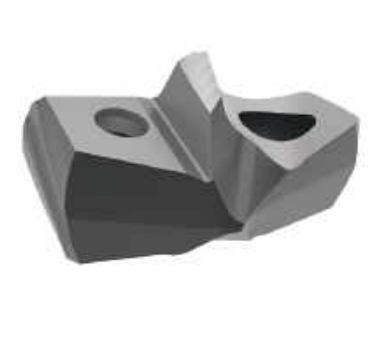

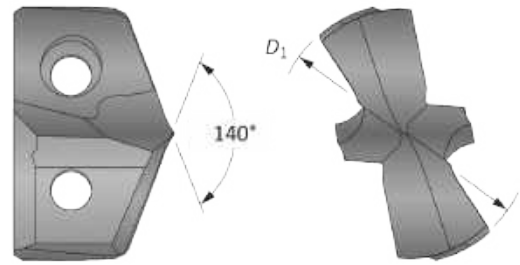

Inserts

Insert			
Fractional Equivalent	D_1 inch	D_1 mm	XTST Part No.
–	0.6299	16.00	**XTST16-16.00**

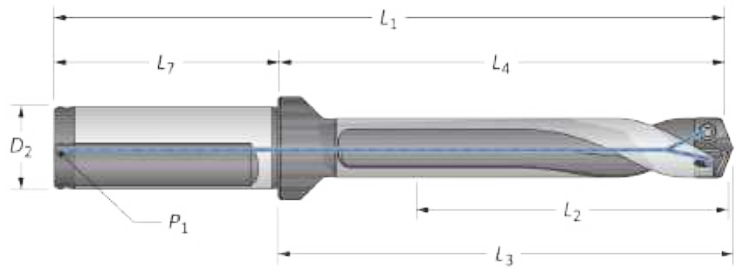

Holders

	Length	Body L_2	Body L_4	Body L_3	Body L_1	Shank L_7	Shank D_2	Shank P_1	Shank Flat	Part No.
i	1.5xD	1.016	2.203	2.313	4.234	2.031	3/4	1/8 NPT	YES	**ST01160-075F**
i	3xD	3.016	3.203	3.313	5.234	2.031	3/4	1/8 NPT	YES	**ST03160-075F**
i	5xD	3.359	4.531	4.656	6.563	2.031	3/4	1/8 NPT	YES	**ST05160-075F**
i	7xD	4.688	5.875	5.984	7.906	2.031	3/4	1/8 NPT	YES	**ST07160-075F**
m	1.5xD	25.5	55.8	58.7	105.8	50.0	20	1/8 BSPT	YES	**ST01160-20FM**
m	3xD	51.0	81.3	84.2	131.3	50.0	20	1/8 BSPT	YES	**ST03160-20FM**
m	5xD	84.9	115.3	118.2	165.3	50.0	20	1/8 BSPT	YES	**ST05160-20FM**
m	7xD	118.9	149.3	152.2	199.3	50.0	20	1/8 BSPT	YES	**ST07160-20FM**

Connection Accessories

Insert Screws	Nylon Locking Screws	Insert Driver	Preset Torque Hand Driver	Replacement Tips	Admissible Tightening Torque*
72556-IP8-1	72556N-IP8-1	8IP-8	8IP-8TL	8IP-8B	15.5 in-lbs (175 N-cm)

*Tightening torques are calculated with a friction coefficient of μ = 0.14 and develop 90% of ultimate yield strength.

A91: 64 - 65
Key on A91: 1
A91: 23

i = Imperial (in)
m = Metric (mm)

Inserts sold in multiples of 1. | Screws sold in multiples of 10.

NOTICE: Structural steel GEN3SYS holders are specifically designed to be used only with GEN3SYS XT Pro structural steel geometry inserts. Using other GEN3SYS XT or XT Pro insert geometries in these holders could lead to chip packing and tool failure.
Contact Application Engineering for questions regarding proper use of tools. *ext:* **7611** | *email:* **appeng@alliedmachine.com**

GEN3SYS® XT Pro Structural Steel Drilling System

17 Series | Diameter Range: 0.6693" - 0.7086" (17.00 mm - 17.99 mm)

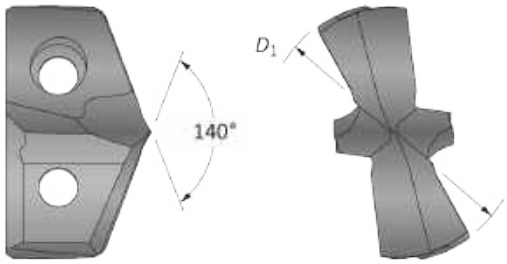

Inserts

Insert			
Fractional Equivalent	D_1 inch	D_1 mm	XTST Part No.
–	0.6693	17.00	**XTST17-17.00**
11/16	0.6876	17.46	**XTST17-17.46**

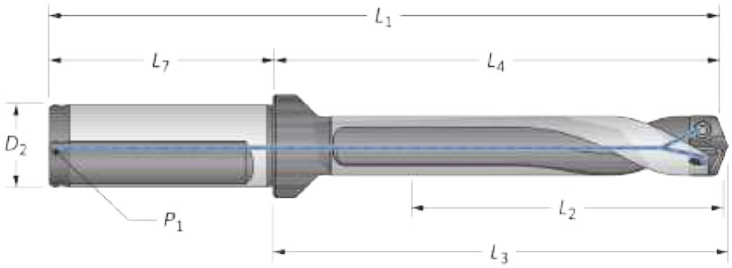

Holders

	Length	Body L_2	Body L_4	Body L_3	Body L_1	Shank L_7	Shank D_2	Shank P_1	Shank Flat	Part No.
i	1.5xD	1.063	2.250	2.359	4.281	2.031	3/4	1/8 NPT	YES	**ST01170-075F**
i	3xD	2.125	3.313	3.422	5.344	2.031	3/4	1/8 NPT	YES	**ST03170-075F**
i	5xD	3.547	4.719	4.844	6.750	2.031	3/4	1/8 NPT	YES	**ST05170-075F**
i	7xD	4.969	6.141	6.250	8.172	2.031	3/4	1/8 NPT	YES	**ST07170-075F**
m	1.5xD	27.0	57.1	60.0	107.1	50.0	20	1/8 BSPT	YES	**ST01170-20FM**
m	3xD	54.0	84.1	87.0	134.1	50.0	20	1/8 BSPT	YES	**ST03170-20FM**
m	5xD	89.9	120.0	122.9	170.0	50.0	20	1/8 BSPT	YES	**ST05170-20FM**
m	7xD	125.9	156.0	158.9	206.0	50.0	20	1/8 BSPT	YES	**ST07170-20FM**

Connection Accessories

Insert Screws	Nylon Locking Screws	Insert Driver	Preset Torque Hand Driver	Replacement Tips	Admissible Tightening Torque*
72567-IP8-1	72567N-IP8-1	8IP-8	8IP-8TL	8IP-8B	15.5 in-lbs (175 N-cm)

*Tightening torques are calculated with a friction coefficient of μ = 0.14 and develop 90% of ultimate yield strength.

A91: 64 - 65
Key on A91: 1
A91: 23

i = Imperial (in)
m = Metric (mm)

Inserts sold in multiples of 1. | Screws sold in multiples of 10.

NOTICE: Structural steel GEN3SYS holders are specifically designed to be used only with GEN3SYS XT Pro structural steel geometry inserts. Using other GEN3SYS XT or XT Pro insert geometries in these holders could lead to chip packing and tool failure.
Contact Application Engineering for questions regarding proper use of tools. *ext:* **7611** | *email:* **appeng@alliedmachine.com**

GEN3SYS® XT Pro Structural Steel Drilling System

18 Series | Diameter Range: 0.7087" - 0.7873" (18.00 mm - 19.99 mm)

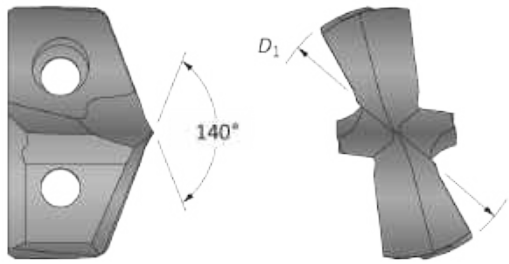

Inserts

Insert			
Fractional Equivalent	D_1 inch	D_1 mm	XTST Part No.
–	0.7087	18.00	**XTST18-18.00**
–	0.7480	19.00	**XTST18-19.00**

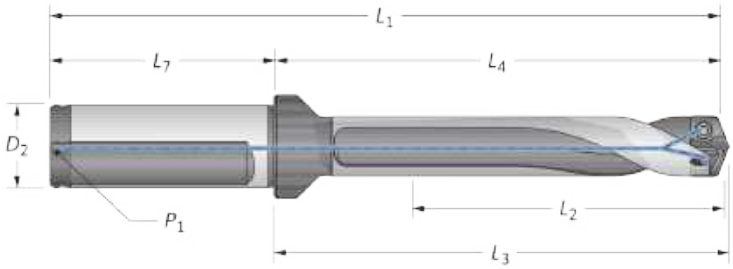

Holders

	Length	Body L_2	Body L_4	Body L_3	Body L_1	Shank L_7	Shank D_2	Shank P_1	Shank Flat	Part No.
i	1.5xD	1.188	2.531	2.641	4.797	2.281	1	1/8 NPT	YES	**ST01180-100F**
i	3xD	2.375	3.703	3.828	5.984	2.281	1	1/8 NPT	YES	**ST03180-100F**
i	5xD	3.938	5.281	5.391	7.563	2.281	1	1/8 NPT	YES	**ST05180-100F**
i	7xD	5.516	6.844	6.969	9.125	2.281	1	1/8 NPT	YES	**ST07180-100F**
m	1.5xD	30.0	64.0	67.1	114.0	50.0	20	1/8 BSPT	YES	**ST01180-20FM**
m	3xD	60.0	94.0	97.1	144.0	50.0	20	1/8 BSPT	YES	**ST03180-20FM**
m	5xD	99.9	134.0	137.1	184.0	50.0	20	1/8 BSPT	YES	**ST05180-20FM**
m	7xD	139.9	174.0	177.1	224.0	50.0	20	1/8 BSPT	YES	**ST07180-20FM**

Connection Accessories

Insert Screws	Nylon Locking Screws	Insert Driver	Preset Torque Hand Driver	Replacement Tips	Admissible Tightening Torque*
7375-IP9-1	7375N-IP9-1	8IP-9	8IP-9TL	8IP-9B	27.0 in-lbs (305 N-cm)

*Tightening torques are calculated with a friction coefficient of μ = 0.14 and develop 90% of ultimate yield strength.

A91: 64 - 65
Key on A91: 1
A91: 23

i = Imperial (in)
m = Metric (mm)

Inserts sold in multiples of 1. | Screws sold in multiples of 10.

NOTICE: Structural steel GEN3SYS holders are specifically designed to be used only with GEN3SYS XT Pro structural steel geometry inserts. Using other GEN3SYS XT or XT Pro insert geometries in these holders could lead to chip packing and tool failure.
Contact Application Engineering for questions regarding proper use of tools. *ext:* **7611** | *email:* **appeng@alliedmachine.com**

GEN3SYS® XT Pro Structural Steel Drilling System

20 Series | Diameter Range: 0.7874" - 0.8660" (20.00 mm - 21.99 mm)

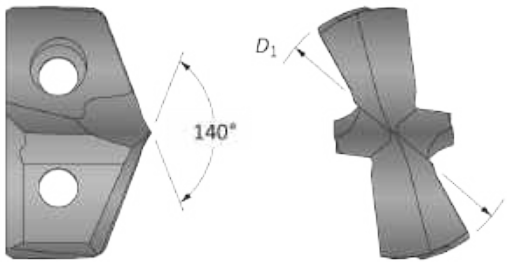

Inserts

Insert			
Fractional Equivalent	**D_1 inch**	**D_1 mm**	**XTST Part No.**
–	0.7874	20.00	**XTST20-20.00**
13/16	0.8126	20.64	**XTST20-20.64**
–	0.8268	21.00	**XTST20-21.00**
–	0.8591	21.82	**XTST20-21.82**

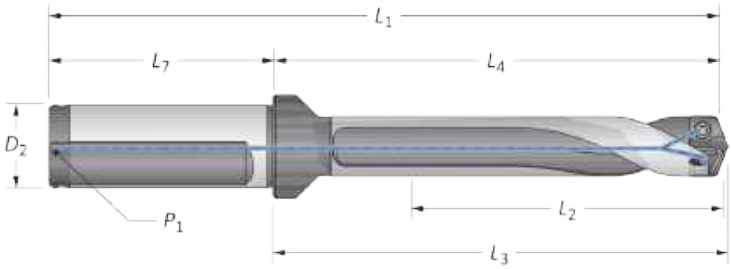

Holders

	Length	Body L_2	Body L_4	Body L_3	Body L_1	Shank L_7	Shank D_2	Shank P_1	Shank Flat	Part No.
i	1.5xD	1.234	2.641	2.766	4.922	2.281	1	1/8 NPT	YES	**ST01200-100F**
i	3xD	2.531	3.938	4.063	6.219	2.281	1	1/8 NPT	YES	**ST03200-100F**
i	5xD	4.344	5.672	5.797	7.953	2.281	1	1/8 NPT	YES	**ST05200-100F**
i	7xD	6.063	7.406	7.531	9.688	2.281	1	1/8 NPT	YES	**ST07200-100F**
m	1.5xD	33.0	67.1	70.3	123.1	56.0	25	1/8 BSPT	YES	**ST01200-25FM**
m	3xD	66.0	100.1	103.3	156.1	56.0	25	1/8 BSPT	YES	**ST03200-25FM**
m	5xD	110.0	144.1	147.2	200.1	56.0	25	1/8 BSPT	YES	**ST05200-25FM**
m	7xD	153.9	188.1	191.2	244.1	56.0	25	1/8 BSPT	YES	**ST07200-25FM**

Connection Accessories

Insert Screws	Nylon Locking Screws	Insert Driver	Preset Torque Hand Driver	Replacement Tips	Admissible Tightening Torque*
7375-IP9-1	7375N-IP9-1	8IP-9	8IP-9TL	8IP-9B	27.0 in-lbs (305 N-cm)

*Tightening torques are calculated with a friction coefficient of μ = 0.14 and develop 90% of ultimate yield strength.

A91: 64 - 65
Key on A91: 1
A91: 23

i = Imperial (in)
m = Metric (mm)

Inserts sold in multiples of 1. | Screws sold in multiples of 10.

NOTICE: Structural steel GEN3SYS holders are specifically designed to be used only with GEN3SYS XT Pro structural steel geometry inserts. Using other GEN3SYS XT or XT Pro insert geometries in these holders could lead to chip packing and tool failure.
Contact Application Engineering for questions regarding proper use of tools. *ext:* **7611** | *email:* **appeng@alliedmachine.com**

GEN3SYS® XT Pro Structural Steel Drilling System

22 Series | Diameter Range: 0.8661" - 0.9448" (22.00 mm - 23.99 mm)

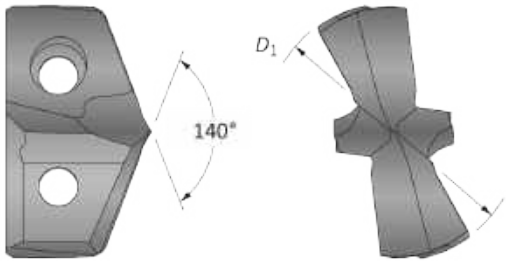

Inserts

Insert			
Fractional Equivalent	D_1 inch	D_1 mm	XTST Part No.
–	0.8661	22.00	**XTST22-22.00**
7/8	0.8752	22.23	**XTST22-22.23**
–	0.9055	23.00	**XTST22-23.00**
15/16	0.9374	23.81	**XTST22-23.81**

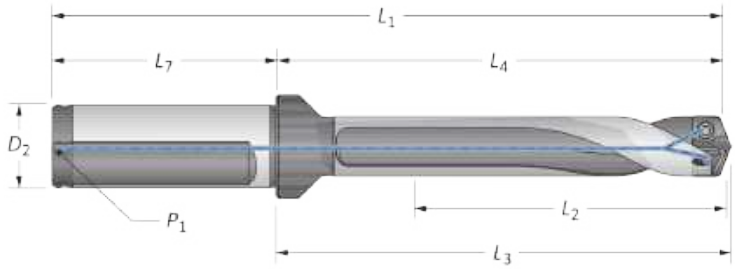

Holders

	Length	Body L_2	Body L_4	Body L_3	Body L_1	Shank L_7	Shank D_2	Shank P_1	Shank Flat	Part No.
i	1.5xD	1.406	2.719	2.859	5.000	2.281	1	1/8 NPT	YES	**ST01220-100F**
i	1.5xD	1.406	2.719	2.859	5.000	2.281	1	1/8 NPT	YES	**ST01225-100F**
i	3xD	2.828	4.141	4.281	6.422	2.281	1	1/8 NPT	YES	**ST03220-100F**
i	3xD	2.828	4.141	4.281	6.422	2.281	1	1/8 NPT	YES	**ST03225-100F***
i	5xD	4.719	6.031	6.172	8.313	2.281	1	1/8 NPT	YES	**ST05220-100F**
i	5xD	4.719	6.031	6.172	8.313	2.281	1	1/8 NPT	YES	**ST05225-100F***
i	7xD	6.609	7.922	8.063	10.203	2.281	1	1/8 NPT	YES	**ST07220-100F**
i	7xD	6.609	7.922	8.063	10.203	2.281	1	1/8 NPT	YES	**ST07225-100F***
m	1.5xD	36.0	69.3	72.7	125.3	56.0	25	1/8 BSPT	YES	**ST01220-25FM**
m	1.5xD	36.0	69.3	72.7	125.3	56.0	25	1/8 BSPT	YES	**ST01225-25FM**
m	3xD	72.0	105.3	108.7	161.3	56.0	25	1/8 BSPT	YES	**ST03220-25FM**
m	3xD	72.0	105.3	108.7	161.3	56.0	25	1/8 BSPT	YES	**ST03225-25FM***
m	5xD	119.9	153.3	156.7	209.3	56.0	25	1/8 BSPT	YES	**ST05220-25FM**
m	5xD	119.9	153.3	156.7	209.3	56.0	25	1/8 BSPT	YES	**ST05225-25FM***
m	7xD	167.9	201.3	204.7	257.3	56.0	25	1/8 BSPT	YES	**ST07220-25FM**
m	7xD	167.9	201.3	204.7	257.3	56.0	25	1/8 BSPT	YES	**ST07225-25FM***

*Oversized body holder (minimum drill diameter = 23 mm)

Connection Accessories

Insert Screws	Nylon Locking Screws	Insert Driver	Preset Torque Hand Driver	Replacement Tips	Admissible Tightening Torque*
739-IP9-1	739N-IP9-1	8IP-9	8IP-9TL	8IP-9B	27.0 in-lbs (305 N-cm)

*Tightening torques are calculated with a friction coefficient of μ = 0.14 and develop 90% of ultimate yield strength.

A91: 64 - 65
Key on A91: 1
A91: 23

i = Imperial (in)
m = Metric (mm)

Inserts sold in multiples of 1. | Screws sold in multiples of 10.

NOTICE: Structural steel GEN3SYS holders are specifically designed to be used only with GEN3SYS XT Pro structural steel geometry inserts. Using other GEN3SYS XT or XT Pro insert geometries in these holders could lead to chip packing and tool failure.
Contact Application Engineering for questions regarding proper use of tools. *ext:* **7611** | *email:* **appeng@alliedmachine.com**

GEN3SYS® XT Pro Structural Steel Drilling System

24 Series | Diameter Range: 0.9449" - 1.0235" (24.00 mm - 25.99 mm)

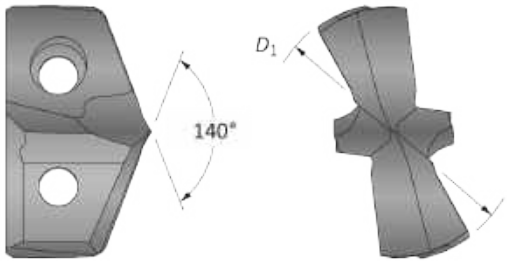

Inserts

Insert			
Fractional Equivalent	D_1 inch	D_1 mm	XTST Part No.
–	0.9449	24.00	**XTST24-24.00**
–	0.9685	24.60	**XTST24-24.60**
1	1.0000	25.40	**XTST24-25.40**
–	1.0150	25.78	**XTST24-25.78**

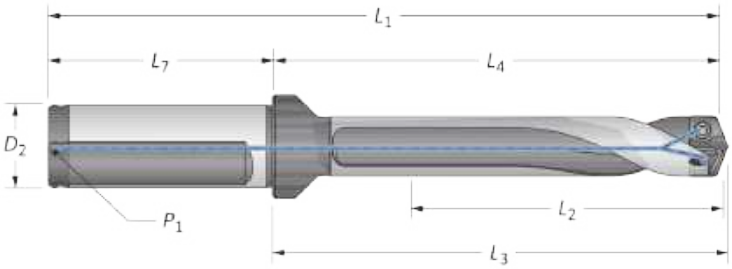

Holders

	Length	Body L_2	Body L_4	Body L_3	Body L_1	Shank L_7	Shank D_2	Shank P_1	Shank Flat	Part No.
i	1.5xD	1.547	2.953	3.094	5.234	2.281	1	1/8 NPT	YES	**ST01240-100F**
i	3xD	3.078	4.484	4.625	6.766	2.281	1	1/8 NPT	YES	**ST03240-100F**
i	5xD	5.125	6.531	6.656	8.813	2.281	1	1/8 NPT	YES	**ST05240-100F**
i	7xD	7.172	8.578	8.703	10.859	2.281	1	1/8 NPT	YES	**ST07240-100F**
m	1.5xD	39.0	74.8	78.3	130.8	56.0	25	1/8 BSPT	YES	**ST01240-25FM**
m	3xD	78.0	113.8	117.3	169.8	56.0	25	1/8 BSPT	YES	**ST03240-25FM**
m	5xD	129.9	165.8	169.2	221.8	56.0	25	1/8 BSPT	YES	**ST05240-25FM**
m	7xD	181.9	217.8	221.2	273.8	56.0	25	1/8 BSPT	YES	**ST07240-25FM**

Connection Accessories

Insert Screws	Nylon Locking Screws	Insert Driver	Preset Torque Hand Driver	Replacement Tips	Admissible Tightening Torque*
739-IP9-1	739N-IP9-1	8IP-9	8IP-9TL	8IP-9B	27.0 in-lbs (305 N-cm)

*Tightening torques are calculated with a friction coefficient of μ = 0.14 and develop 90% of ultimate yield strength.

A91: 64 - 65
Key on A91: 1
A91: 23

i = Imperial (in)
m = Metric (mm)

Inserts sold in multiples of 1. | Screws sold in multiples of 10.

NOTICE: Structural steel GEN3SYS holders are specifically designed to be used only with GEN3SYS XT Pro structural steel geometry inserts. Using other GEN3SYS XT or XT Pro insert geometries in these holders could lead to chip packing and tool failure.
Contact Application Engineering for questions regarding proper use of tools. *ext:* **7611** | *email:* **appeng@alliedmachine.com**

GEN3SYS® XT Pro Structural Steel Drilling System

26 Series | Diameter Range: 1.0236" - 1.1416" (26.00 mm - 28.99 mm)

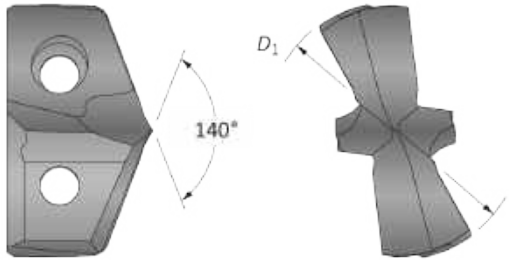

Inserts

Insert			
Fractional Equivalent	D_1 inch	D_1 mm	XTST Part No.
–	1.0236	26.00	**XTST26-26.00**
1-1/16	1.0626	26.99	**XTST26-26.99**
–	1.0630	27.00	**XTST26-27.00**
–	1.1024	28.00	**XTST26-28.00**
1-1/8	1.1252	28.58	**XTST26-28.58**

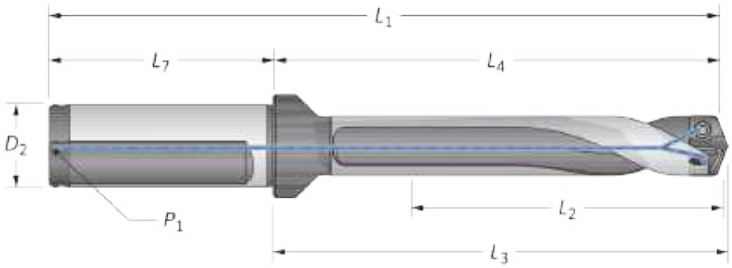

Holders

	Length	Body L_2	Body L_4	Body L_3	Body L_1	Shank L_7	Shank D_2	Shank P_1	Shank Flat	Part No.
i	1.5xD	1.703	3.344	3.469	5.625	2.281	1-1/4	1/4 NPT	YES	**ST01260-125F**
i	3xD	3.422	5.063	5.188	7.344	2.281	1-1/4	1/4 NPT	YES	**ST03260-125F**
i	5xD	5.719	7.344	7.484	9.625	2.281	1-1/4	1/4 NPT	YES	**ST05260-125F**
i	7xD	7.984	9.625	9.766	11.906	2.281	1-1/4	1/4 NPT	YES	**ST07260-125F**
m	1.5xD	43.5	84.6	87.9	144.6	60.0	32	1/4 BSPT	YES	**ST01260-32FM**
m	3xD	87.0	128.1	131.4	188.1	60.0	32	1/4 BSPT	YES	**ST03260-32FM**
m	5xD	145.0	186.1	189.4	246.1	60.0	32	1/4 BSPT	YES	**ST05260-32FM**
m	7xD	202.9	244.0	247.4	304.0	60.0	32	1/4 BSPT	YES	**ST07260-32FM**

Connection Accessories

Insert Screws	Nylon Locking Screws	Insert Driver	Preset Torque Hand Driver	Replacement Tips	Admissible Tightening Torque*
7495-IP15-1	7495N-IP15-1	8IP-15	8IP-15TL	8IP-15B	61.0 in-lbs (690 N-cm)

*Tightening torques are calculated with a friction coefficient of μ = 0.14 and develop 90% of ultimate yield strength.

A91: 64 - 65
Key on A91: 1
A91: 23

i = Imperial (in)
m = Metric (mm)

Inserts sold in multiples of 1. | Screws sold in multiples of 10.

NOTICE: Structural steel GEN3SYS holders are specifically designed to be used only with GEN3SYS XT Pro structural steel geometry inserts. Using other GEN3SYS XT or XT Pro insert geometries in these holders could lead to chip packing and tool failure.
Contact Application Engineering for questions regarding proper use of tools. *ext:* **7611** | *email:* **appeng@alliedmachine.com**

GEN3SYS® XT Pro Structural Steel Drilling System

29 Series | Diameter Range: 1.1417" - 1.2597" (29.00 mm - 31.99 mm)

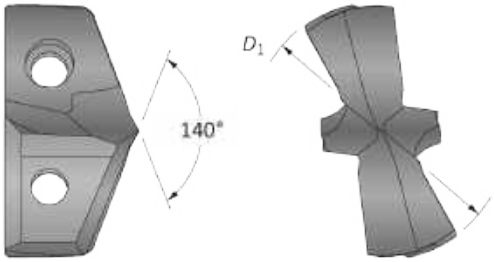

Inserts

Insert			
Fractional Equivalent	**D_1 inch**	**D_1 mm**	**XTST Part No.**
–	1.1417	29.00	**XTST29-29.00**
–	1.1811	30.00	**XTST29-30.00**
1-3/16	1.1874	30.16	**XTST29-30.16**
–	1.2205	31.00	**XTST29-31.00**
1-1/4	1.2500	31.75	**XTST29-31.75**

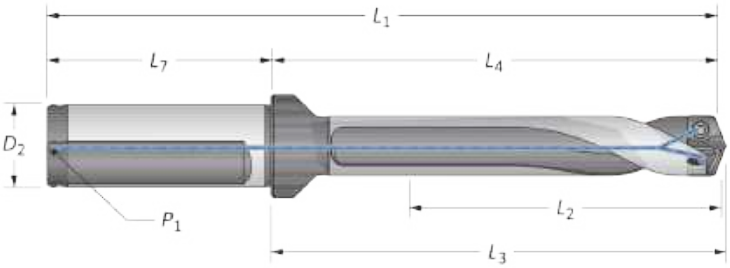

Holders

		Body				Shank				
	Length	**L_2**	**L_4**	**L_3**	**L_1**	**L_7**	**D_2**	**P_1**	**Flat**	**Part No.**
i	1.5xD	1.891	3.328	3.625	5.766	2.281	1-1/4	1/4 NPT	YES	**ST01290-125F**
i	3xD	3.781	5.375	5.516	7.656	2.281	1-1/4	1/4 NPT	YES	**ST03290-125F**
i	5xD	6.297	7.906	8.047	10.188	2.281	1-1/4	1/4 NPT	YES	**ST05290-125F**
i	7xD	8.813	10.422	10.563	12.703	2.281	1-1/4	1/4 NPT	YES	**ST07290-125F**
m	1.5xD	48.0	88.2	91.7	148.2	60.0	32	1/4 BSPT	YES	**ST01290-32FM**
m	3xD	96.0	136.2	139.7	196.2	60.0	32	1/4 BSPT	YES	**ST03290-32FM**
m	5xD	159.9	200.1	203.7	260.1	60.0	32	1/4 BSPT	YES	**ST05290-32FM**
m	7xD	223.9	264.1	267.7	324.1	60.0	32	1/4 BSPT	YES	**ST07290-32FM**

Connection Accessories

Insert Screws	Nylon Locking Screws	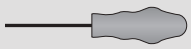 Insert Driver	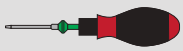 Preset Torque Hand Driver	Replacement Tips	Admissible Tightening Torque*
7495-IP15-1	7495N-IP15-1	8IP-15	8IP-15TL	8IP-15B	61.0 in-lbs (690 N-cm)

*Tightening torques are calculated with a friction coefficient of μ = 0.14 and develop 90% of ultimate yield strength.

A91: 64 - 65

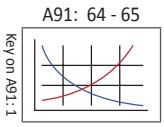

Key on A91: 1

A91: 23

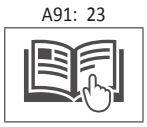

i = Imperial (in)
m = Metric (mm)

Inserts sold in multiples of 1. | Screws sold in multiples of 10.

NOTICE: Structural steel GEN3SYS holders are specifically designed to be used only with GEN3SYS XT Pro structural steel geometry inserts. Using other GEN3SYS XT or XT Pro insert geometries in these holders could lead to chip packing and tool failure.
Contact Application Engineering for questions regarding proper use of tools. *ext:* **7611** | *email:* **appeng@alliedmachine.com**

GEN3SYS® XT Pro Structural Steel Drilling System

32 Series | Diameter Range: 1.2598” - 1.3780” (32.00 mm - 35.00 mm)

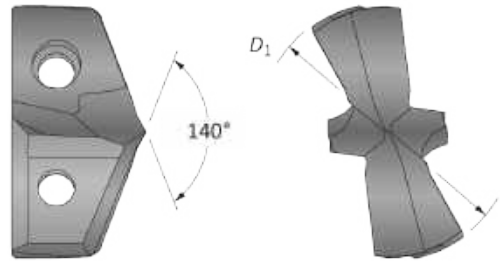

Inserts

Insert			
Fractional Equivalent	D_1 inch	D_1 mm	XTST Part No.
–	1.2598	32.00	**XTST32-32.00**
–	1.2992	33.00	**XTST32-33.00**
1-5/16	1.3126	33.34	**XTST32-33.34**
–	1.3386	34.00	**XTST32-34.00**
1-3/8	1.3752	34.93	**XTST32-34.93**

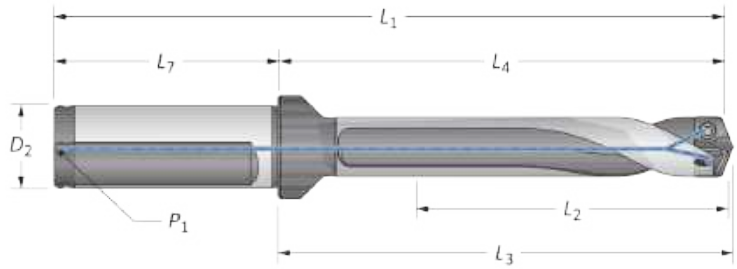

Holders

	Length	Body L_2	Body L_4	Body L_3	Body L_1	Shank L_7	Shank D_2	Shank P_1	Flat	Part No.
i	1.5xD	2.078	4.156	4.313	6.828	2.688	1-1/2	1/4 NPT	YES	**ST01320-150F**
i	3xD	4.141	6.219	6.375	8.891	2.688	1-1/2	1/4 NPT	YES	**ST03320-150F**
i	5xD	6.922	8.969	9.125	11.656	2.688	1-1/2	1/4 NPT	YES	**ST05320-150F**
i	7xD	9.641	11.719	11.891	14.406	2.688	1-1/2	1/4 NPT	YES	**ST07320-150F**
m	1.5xD	52.5	105.2	109.5	165.2	60.0	32	1/4 BSPT	YES	**ST01320-32FM**
m	1.5xD	52.5	105.2	109.5	173.5	70.0	40	1/4 BSPT	YES	**ST01320-40FM**
m	3xD	105.0	157.7	162.0	217.7	60.0	32	1/4 BSPT	YES	**ST03320-32FM**
m	3xD	105.0	157.7	162.0	227.7	70.0	40	1/4 BSPT	YES	**ST03320-40FM**
m	5xD	175.0	227.7	232.0	287.7	60.0	32	1/4 BSPT	YES	**ST05320-32FM**
m	5xD	175.0	227.7	232.0	297.7	70.0	40	1/4 BSPT	YES	**ST05320-40FM**
m	7xD	244.9	297.7	302.2	357.7	60.0	32	1/4 BSPT	YES	**ST07320-32FM**
m	7xD	244.9	297.7	302.0	367.7	70.0	40	1/4 BSPT	YES	**ST07320-40FM**

Connection Accessories

Insert Screws	Nylon Locking Screws	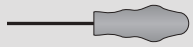 Insert Driver	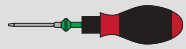 Preset Torque Hand Driver	Replacement Tips	Admissible Tightening Torque*
7495-IP15-1	7495N-IP15-1	8IP-15	8IP-15TL	8IP-15B	61.0 in-lbs (690 N-cm)

*Tightening torques are calculated with a friction coefficient of μ = 0.14 and develop 90% of ultimate yield strength.

A91: 64 - 65
Key on A91: 1
A91: 23

i = Imperial (in)
m = Metric (mm)

Inserts sold in multiples of 1. | Screws sold in multiples of 10.

NOTICE: Structural steel GEN3SYS holders are specifically designed to be used only with GEN3SYS XT Pro structural steel geometry inserts. Using other GEN3SYS XT or XT Pro insert geometries in these holders could lead to chip packing and tool failure.
Contact Application Engineering for questions regarding proper use of tools. *ext:* **7611** | *email:* **appeng@alliedmachine.com**

Notes

4TEX® Drill Safety Information

Mechanical / Physical Hazards

Operating cutting tools may present both mechanical and physical hazards. These hazards can result in serious injury to workers or those near machines and damage to machines and the cutting tools. Cutting tools and/or assemblies may break or come loose when in operation causing projectile metal fragments. Metal chips produced by cutting tools have sharp edges and may be very hot. To minimize the risk of mechanical or physical hazards:

- Always secure all components of the cutting tool assembly before operating.
- Wear cut-resistant gloves when handling cutting tool components and assemblies.
- Do not touch metal chips produced by the cutting tools with your hands.
- Always wear appropriate personal protective equipment including safety goggles or glasses with side shields.
- Immediately discontinue use of damaged cutting tools.
- To avoid machine tool damage, make sure the machine has adequate power and torque for the cutting tool when operating. See catalog for power and torque requirements.
- Operating long cutting tools at high spindle speeds can result in a high risk of tool failure and serious injury.

Dust and Fume Hazards

Grinding, welding, cutting or burning hard metals such as high-speed steel, cobalt or carbides produces hazardous dust and/or fumes. Continued long-term exposure to hazardous dust and fumes can cause serious health issues. To minimize the risk of dust and fume hazards:

- Do not regrind or sharpen cutting tools without using adequate ventilation.
- Use appropriate personal protective equipment such as approved respirator to avoid inhalation, swallowing, or skin contact with the hazardous dust and/or fumes.
- Do not eat, drink, or smoke in the machine operation area. Always wash skin prior to eating, drinking, or smoking to avoid hazardous ingestion.

Sensitizing Hazards

Components of an assembled cutting tool are made from a variety of metal elements that may cause allergic skin reactions with prolonged skin contact.
To minimize the risk of allergic skin reactions:

- Avoid skin contact with cutting tools.
- Wear appropriate gloves and protective clothing.
- Wash skin and launder clothing after handling cutting tools to reduce the risk of skin allergies.

Preventive Safety Measure Applicable to all Hazards

- Prior to using cutting tools, always read Allied Machine's Safety Data Sheets, product catalog, and product labels for additional warnings for the Allied Machine product being used.
- For machining safety, only operate equipment when all necessary guards, interlocks and other safety devices are in place and functional. Use all appropriate safety guards or machine encapsulations to securely collect particles such as chips or cutting elements that may become projectiles.

Through Hole

- With through holes, a **sharp-edged disk** is created as tool breakout occurs.
  - ⚠ Proper personal protective equipment must be used to prevent injury (e.g. wear cut-resistant gloves).

4TEX® Drilling System

4TEX Drill ***Advantages***

- ***Superior chip evacuation***
  provided by the two twisted coolant holes
- ***Improved hole size***
  from the increased holder rigidity
- ***Longer tool life***
  provided by the four-sided insert design
- ***Optimal chip formation***
  with ISO-specific insert geometry/coating combinations
- ***Competitive cycle times***
  due to single effective cutting when using light duty machines

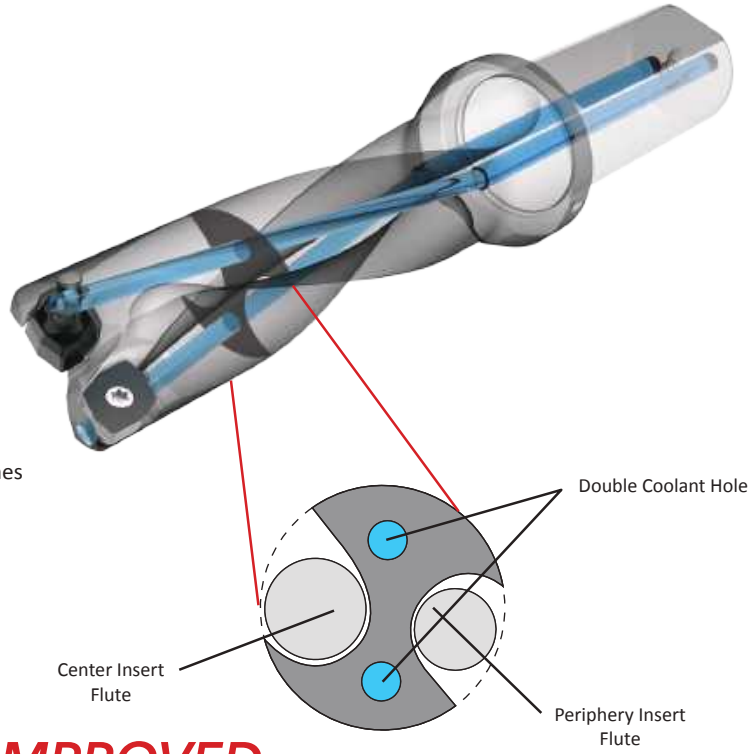

DESIGNED TO GIVE YOU IMPROVED HOLE SIZE AND STRAIGHTNESS

- The two twisted coolant holes allow the core to remain intact, making the core thicker and stronger for improved hole straightness even in uneven surfaces.
- The enlarged dual coolant outlets increase the coolant volume, which improves the chip evacuation resulting in improved hole size.
- The flute space of the internal cutting edge side (where chips get stuck most often) is 1.6x larger than typical IC drills, helping to mitigate catastrophic failures and improves hole sizes.

LONGER TOOL LIFE

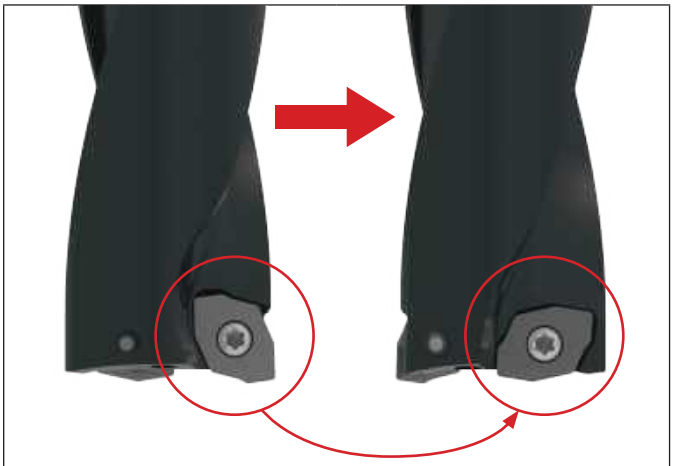

The 4 Edge Advantage

When the cutting edge on the periphery insert wears down, it can be rotated and moved to the center insert position.

AVAILABLE *LENGTHS*

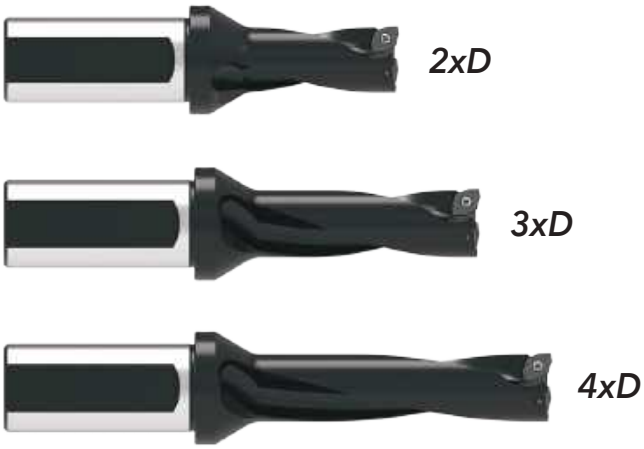

Insert Information

4 CUTTING EDGES

- Each insert has two inner cutting edges and two outer cutting edges.
- Economical solution that increases tool life because of the ability to rotate the inserts.
- Available in ISO material-specific geometry/coating combinations.

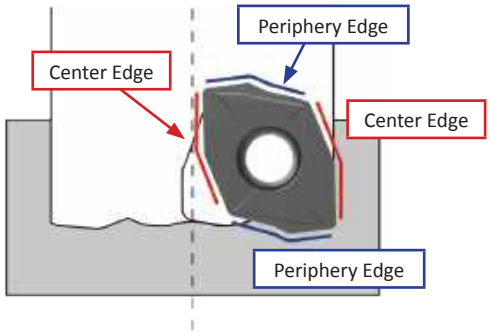

Periphery Insert

Periphery edge chip formation:

Center Insert

Center edge chip formation:

ISO Material	Geometry	Coating	Description
P	General Rake	AM480	A general purpose geometry that provides excellent chip formation in most steels including free-machining, medium- and high-carbon steels. A P30 carbide substrate for improved toughness and AM480 coating, a proprietary wear resistant multilayer PVD coating to improve tool life.
S M	High Rake	AM485	A higher rake geometry that provides excellent chip formation in both stainless steels and high-temperature alloys. A tough M25 carbide substrate coated with AM485, a high heat resistance proprietary multilayer PVD coating.
H	Low Rake	AM480	A lower rake geometry to improve edge strength in both hardened tool steels and high-strength alloys. With a P30 carbide substrate for improved toughness and coated with AM480, a proprietary multilayer PVD coating to improve resistance against tool wear.
K	General Rake	AM480	With a general purpose geometry, the K inserts can be used in grey cast irons as well as ductile irons. A high wear-resistant K10 carbide substrate to improve tool life and coated with AM480, a proprietary multilayer PVD coating to improve resistance against tool wear.
N	High Rake	TiCN	A higher rake cutting geometry provides excellent chip formation in nonferrous materials. An M15/K15 carbide substrate paired with TiCN coating for improved lubricity to resist built-up material, increasing tool life and maintaining chip formation.

Insert Information

Series	Insert Prefix	Dimension (mm)					Angle		Shape
		L_1	L_2	T	D_1	R	A_1	A_2	
03	**4T-030203C-x**	5.60	4.80	2.30	2.40	0.30	7°	10°	Style 1
	4T-030203P-x	6.38	4.77	2.30	2.40	0.30	7°	10°	Style 2
04	**4T-040203-x**	6.21	5.06	2.60	2.45	0.30	13°	10°	Style 3
05	**4T-05T203-x**	7.26	5.48	2.76	2.55	0.30	13°	7°	
06	**4T-06T204-x**	8.59	6.44	2.89	2.79	0.40	13°	7°	
07	**4T-070305-x**	10.21	8.02	3.24	3.00	0.50	13°	7°	
09	**4T-09T306-x**	12.18	9.55	4.03	3.64	0.60	13°	7°	
11	**4T-11T306-x**	14.50	11.61	4.06	4.62	0.60	13°	7°	
14	**4T-140408-x**	17.99	14.40	4.88	5.76	0.80	13°	7°	

Style 1

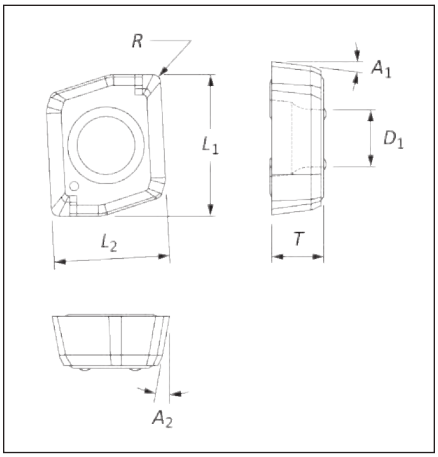

Style 2

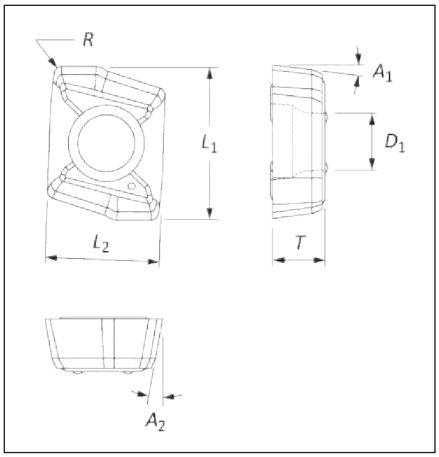

Style 3

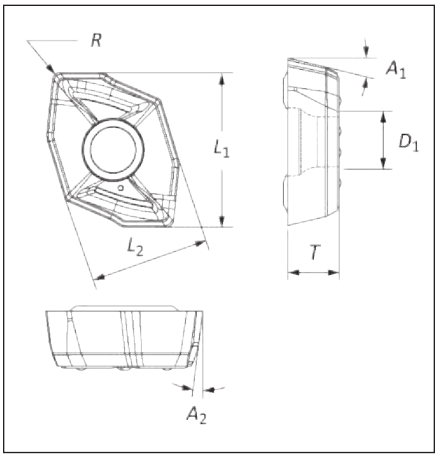

4TEX® Drill Interrupted Cuts

(*DON'T*) **PARDON THE INTERRUPTION**

The 4TEX drill is the premium solution when the cut is interrupted. The indexable carbide insert design provides multiple points of stability, so the entire cutting edge does not require engagement while still providing the hole quality required.

QUICK TROUBLESHOOTING

Starting on Angled Surfaces
- Reduce entry feed by 20 - 50%.
- Use lower rake geometry if insert chipping occurs.

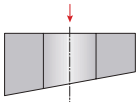

Angled Bore Exit
- Reduce entry feed by 50% on breakout.
- Use tough insert and stable corner radius.

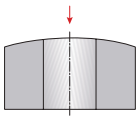

Starting on Convex Surfaces
- Reduce entry feed by 50%.
- Use lower rake geometry if insert chipping occurs.

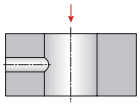

Drilling Through a Cross Hole
- Reduce feed rate by 50% if necessary.
- Use good coolant flow and monitor chip packing.
- Use lower rake geometry if insert chipping occurs.

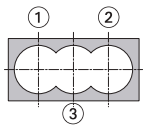

Chain Drilling
- Use good coolant flow.
- Reduce feed rate by 50% for interrupted cut.
- Use lower rake geometry if insert chipping occurs.

THE PROOF IS IN THE **CHIPS**

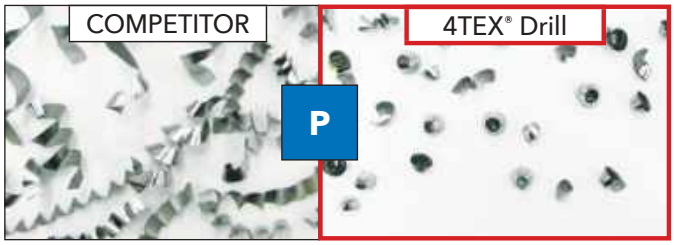

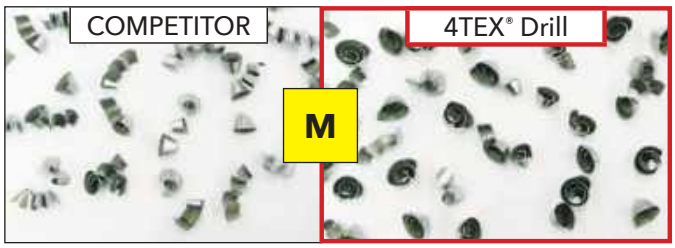

Product Nomenclature

4TEX Drill Holders

D4	03	1200	M	–	075	F
1	2	3*	4		5	6

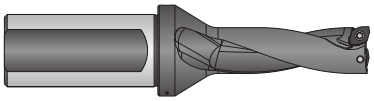

1. Length-to-Diameter-Ratio
D2 = 2xD
D3 = 3xD
D4 = 4xD

2. Series	
03 = 03 series	**07** = 07 series
04 = 04 series	**09** = 09 series
05 = 05 series	**11** = 11 series
06 = 06 series	**14** = 14 series

3. Diameter*
0750 = 0.0750"
1200 = 12 mm

4. Diameter Style
I = Imperial
M = Metric

5. Shank Diameter	
Imperial	**Metric**
075 = 0.750"	**20** = 20 mm
100 = 1.000"	**25** = 25 mm
125 = 1.250"	**32** = 32 mm
150 = 1.500"	**40** = 40 mm

6. Shank Style
F = Imperial flanged shank
FM = Metric flanged shank

***Ordering Nonstocked Diameters:**
Nonstocked diameters are available upon request.
Please refer to price list for applicable process fees.

Ordering example:
Inch: 03 Series (Ø 0.480") = D2030480I-075F
Metric: 03 Series (12.65 mm) = D2031265M-20FM

Reference Key

Symbol	Attribute
D_1	Drill diameter
D_2	Shank diameter
D_3	Flange diameter
L_1	Assembled overall length
L_2	Drill depth
L_3	Reference length

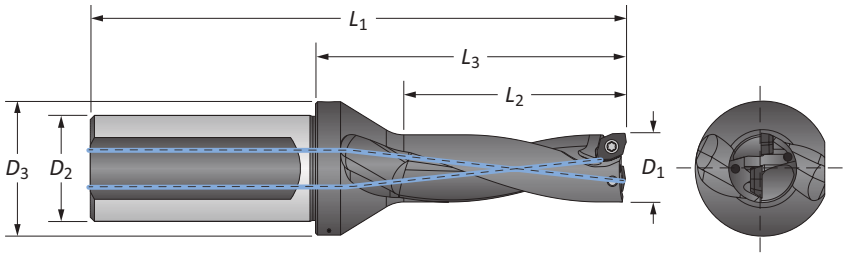

4TEX® Drill Holders | Imperial Shank | Metric Shank

03 Series | Diameter Range: 0.472" - 0.512" (12.00 mm - 13.00 mm)*

*See the 4TEX drill catalog (A55-4TX) for all diameters available.

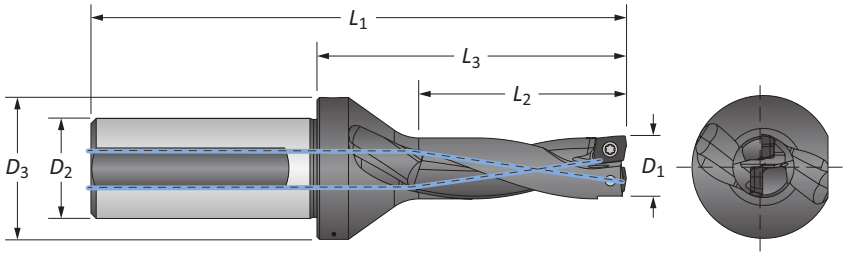

Imperial Shank

	Length	Fractional Equivalent	D_1 in	D_1 mm	Body L_2	Body L_3	Body L_1	Shank D_2	Shank D_3	Max Offset	Part No.
i	2xD	–	0.472	12.00	0.945	1.787	3.480	0.750	1.063	0.020	**D2031200M-075F**
		–	0.512	13.00	1.024	1.866	3.559	0.750	1.063	0.012	**D2031300M-075F**
	3xD	–	0.472	12.00	1.417	2.260	3.953	0.750	1.063	0.020	**D3031200M-075F**
		–	0.512	13.00	1.535	2.378	4.071	0.750	1.063	0.012	**D3031300M-075F**
	4xD	–	0.472	12.00	1.890	2.732	4.425	0.750	1.063	0.020	**D4031200M-075F**
		–	0.512	13.00	2.047	2.890	4.583	0.750	1.063	0.012	**D4031300M-075F**

Metric Shank

	Length	Fractional Equivalent	D_1 in	D_1 mm	Body L_2	Body L_3	Body L_1	Shank D_2	Shank D_3	Max Offset	Part No.
m	2xD	–	0.472	12.00	24.00	45.40	88.40	20.00	27.00	0.50	**D2031200M-20FM**
		–	0.512	13.00	26.00	47.40	90.40	20.00	27.00	0.30	**D2031300M-20FM**
	3xD	–	0.472	12.00	36.00	57.40	100.40	20.00	27.00	0.50	**D3031200M-20FM**
		–	0.512	13.00	39.00	60.40	103.40	20.00	27.00	0.30	**D3031300M-20FM**
	4xD	–	0.472	12.00	48.00	69.40	112.40	20.00	27.00	0.50	**D4031200M-20FM**
		–	0.512	13.00	52.00	73.40	116.40	20.00	27.00	0.30	**D4031300M-20FM**

IC Inserts

ISO Material	Style	Part No.	Insert Screw	Torx® Driver	Admissible Tightening Torque
P	Center	**4T-030203C-P**	7241-T6-1	8T-6	4.4 in-lbs (0.5 N-m)
	Periphery	**4T-030203P-P**			
S M	Center	**4T-030203C-M**			
	Periphery	**4T-030203P-M**			
H	Center	**4T-030203C-H**			
	Periphery	**4T-030203P-H**			
K	Center	**4T-030203C-K**			
	Periphery	**4T-030203P-K**			
N	Center	**4T-030203C-N**			
	Periphery	**4T-030203P-N**			

Expected Hole Tolerances

Length	in	mm
2xD	-0.004 / +0.008	-0.10 / +0.20
3xD	-0.004 / +0.008	-0.10 / +0.20
4xD	-0.004 / +0.010	-0.10 / +0.25

A91: 66 A91: 59 - 61 A91: 58
Key on A91: 1

i = Imperial (in)
m = Metric (mm)
IC inserts sold in quantities of 10.
Insert screws sold in quantities of 10.

4TEX® Drill Holders | Imperial Shank | Metric Shank

04 Series | Diameter Range: 0.551" - 0.591" (14.00 mm - 15.00 mm)*

*See the 4TEX drill catalog (A55-4TX) for all diameters available.

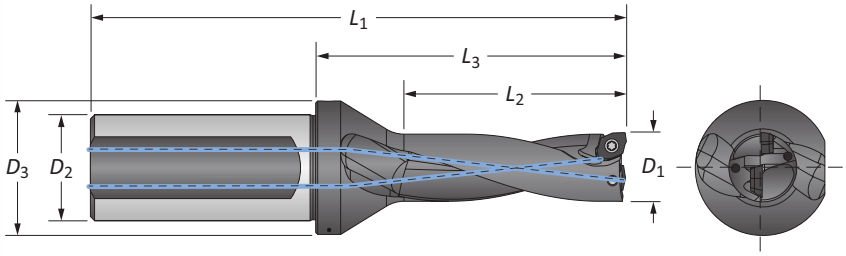

Imperial Shank

	Length	Fractional Equivalent	D_1 in	D_1 mm	Body L_2	Body L_3	Body L_1	Shank D_2	Shank D_3	Max Offset	Part No.
i	2xD	–	0.551	14.00	1.102	1.945	3.638	0.750	1.063	0.016	**D2041400M-075F**
		9/16	0.563	14.29	1.124	1.945	3.638	0.750	1.063	0.013	**D2040562I-075F**
		–	0.591	15.00	1.181	2.024	3.717	0.750	1.063	0.008	**D2041500M-075F**
	3xD	–	0.551	14.00	1.654	2.496	4.189	0.750	1.063	0.016	**D3041400M-075F**
		9/16	0.563	14.29	1.686	2.496	4.189	0.750	1.063	0.013	**D3040562I-075F**
		–	0.591	15.00	1.772	2.614	4.307	0.750	1.063	0.008	**D3041500M-075F**
	4xD	–	0.551	14.00	2.205	3.047	4.740	0.750	1.063	0.016	**D4041400M-075F**
		9/16	0.563	14.29	2.248	3.047	4.740	0.750	1.063	0.013	**D4040562I-075F**
		–	0.591	15.00	2.362	3.205	4.898	0.750	1.063	0.008	**D4041500M-075F**

Metric Shank

	Length	Fractional Equivalent	D_1 in	D_1 mm	Body L_2	Body L_3	Body L_1	Shank D_2	Shank D_3	Max Offset	Part No.
m	2xD	–	0.551	14.00	28.00	49.40	92.40	20.00	27.00	0.40	**D2041400M-20FM**
		9/16	0.563	14.29	28.55	49.40	92.40	20.00	27.00	0.30	**D2040562I-20FM**
		–	0.591	15.00	30.00	51.40	94.40	20.00	27.00	0.20	**D2041500M-20FM**
	3xD	–	0.551	14.00	42.00	63.40	106.40	20.00	27.00	0.40	**D3041400M-20FM**
		9/16	0.563	14.29	42.82	63.40	106.40	20.00	27.00	0.30	**D3040562I-20FM**
		–	0.591	15.00	45.00	66.40	109.40	20.00	27.00	0.20	**D3041500M-20FM**
	4xD	–	0.551	14.00	56.00	77.40	120.40	20.00	27.00	0.40	**D4041400M-20FM**
		9/16	0.563	14.29	57.10	77.40	120.40	20.00	27.00	0.30	**D4040562I-20FM**
		–	0.591	15.00	60.00	81.40	124.40	20.00	27.00	0.20	**D4041500M-20FM**

IC Inserts

ISO Material	Part No.	Insert Screw	Torx® Driver	Admissible Tightening Torque
P	**4T-040203-P**	7241-T6-1	8T-6	4.4 in-lbs (0.5 N-m)
S M	**4T-040203-M**			
H	**4T-040203-H**			
K	**4T-040203-K**			
N	**4T-040203-N**			

Expected Hole Tolerances

Length	in	mm
2xD	-0.004 / +0.008	-0.10 / +0.20
3xD	-0.004 / +0.008	-0.10 / +0.20
4xD	-0.004 / +0.010	-0.10 / +0.25

A91: 66 A91: 59 - 61 A91: 58
Key on A91: 1

i = Imperial (in)
m = Metric (mm)
IC inserts sold in quantities of 10.
Insert screws sold in quantities of 10.

4TEX® Drill Holders | Imperial Shank

05 Series | Diameter Range: 0.625" - 0.709" (15.88 mm - 18.00 mm)*

*See the 4TEX drill catalog (A55-4TX) for all diameters available.

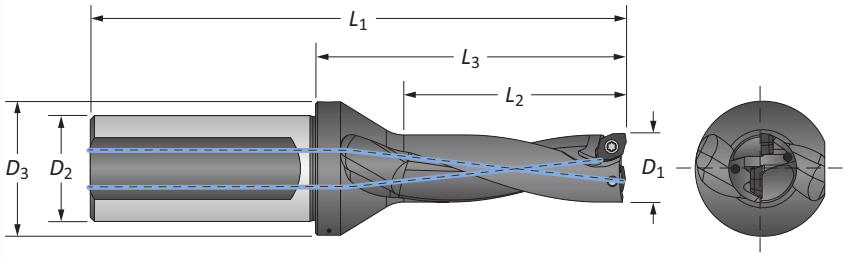

Imperial Shank

Length	Fractional Equivalent	D_1 in	D_1 mm	Body L_2	Body L_3	Body L_1	Shank D_2	Shank D_3	Max Offset	Part No.
2xD	5/8	0.625	15.88	1.250	2.146	4.272	1.000	1.260	0.029	**D2050625I-100F**
	–	0.630	16.00	1.260	2.185	4.311	1.000	1.260	0.028	**D2051600M-100F**
	–	0.669	17.00	1.339	2.264	4.390	1.000	1.260	0.016	**D2051700M-100F**
	11/16	0.687	17.46	1.374	2.264	4.390	1.000	1.260	0.012	**D2050687I-100F**
	–	0.709	18.00	1.417	2.343	4.469	1.000	1.260	0.008	**D2051800M-100F**
3xD	5/8	0.625	15.88	1.875	2.756	4.882	1.000	1.260	0.029	**D3050625I-100F**
	–	0.630	16.00	1.890	2.815	4.941	1.000	1.260	0.028	**D3051600M-100F**
	–	0.669	17.00	2.008	2.933	5.059	1.000	1.260	0.016	**D3051700M-100F**
	11/16	0.687	17.46	2.061	2.933	5.059	1.000	1.260	0.012	**D3050687I-100F**
	–	0.709	18.00	2.126	3.051	5.177	1.000	1.260	0.008	**D3051800M-100F**
4xD	5/8	0.625	15.88	2.500	3.366	5.492	1.000	1.260	0.029	**D4050625I-100F**
	–	0.630	16.00	2.520	3.445	5.571	1.000	1.260	0.028	**D4051600M-100F**
	–	0.669	17.00	2.677	3.602	5.728	1.000	1.260	0.016	**D4051700M-100F**
	11/16	0.687	17.46	2.748	3.602	5.728	1.000	1.260	0.012	**D4050687I-100F**
	–	0.709	18.00	2.835	3.760	5.886	1.000	1.260	0.008	**D4051800M-100F**

IC Inserts

ISO Material	Part No.	Insert Screw	Torx® Driver	Admissible Tightening Torque
P	**4T-05T203-P**	7243-T6-1	8T-6	4.4 in-lbs (0.5 N-m)
S M	**4T-05T203-M**			
H	**4T-05T203-H**			
K	**4T-05T203-K**			
N	**4T-05T203-N**			

Expected Hole Tolerances

Length	in	mm
2xD	-0.004 / +0.008	-0.10 / +0.20
3xD	-0.004 / +0.008	-0.10 / +0.20
4xD	-0.004 / +0.010	-0.10 / +0.25

A91: 66 Key on A91: 1
A91: 59 - 61
A91: 58

ⓘ = Imperial (in)
ⓜ = Metric (mm)
IC inserts sold in quantities of 10.
Insert screws sold in quantities of 10.

4TEX® Drill Holders | Metric Shank

05 Series | Diameter Range: 0.625" - 0.709" (15.88 mm - 18.00 mm)*

*See the 4TEX drill catalog (A55-4TX) for all diameters available.

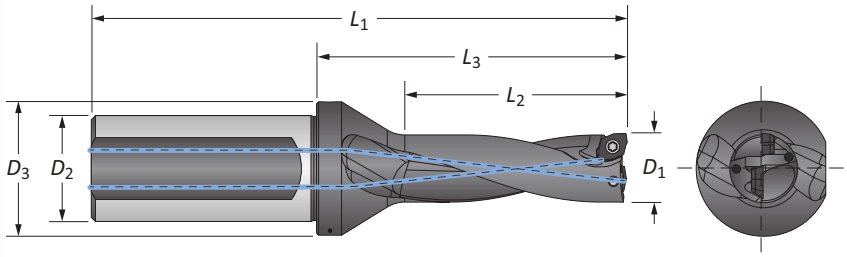

Metric Shank

	Length	Fractional Equivalent	D_1 in	D_1 mm	Body L_2	Body L_3	Body L_1	Shank D_2	Shank D_3	Max Offset	Part No.
	2xD	5/8	0.625	15.88	31.75	54.50	108.50	25.00	32.00	0.70	**D2050625I-25FM**
		–	0.630	16.00	32.00	55.50	109.50	25.00	32.00	0.70	**D2051600M-25FM**
		–	0.669	17.00	34.00	57.50	111.50	25.00	32.00	0.40	**D2051700M-25FM**
		11/16	0.687	17.46	34.90	57.50	111.50	25.00	32.00	0.30	**D2050687I-25FM**
		–	0.709	18.00	36.00	59.50	113.50	25.00	32.00	0.20	**D2051800M-25FM**
	3xD	5/8	0.625	15.88	47.63	70.00	124.00	25.00	32.00	0.70	**D3050625I-25FM**
		–	0.630	16.00	48.00	71.50	125.50	25.00	32.00	0.70	**D3051600M-25FM**
ⓜ		–	0.669	17.00	51.00	74.50	128.50	25.00	32.00	0.40	**D3051700M-25FM**
		11/16	0.687	17.46	52.35	74.50	128.50	25.00	32.00	0.30	**D3050687I-25FM**
		–	0.709	18.00	54.00	77.50	131.50	25.00	32.00	0.20	**D3051800M-25FM**
	4xD	5/8	0.625	15.88	63.50	85.50	139.50	25.00	32.00	0.70	**D4050625I-25FM**
		–	0.630	16.00	64.00	87.50	141.50	25.00	32.00	0.70	**D4051600M-25FM**
		–	0.669	17.00	68.00	91.50	145.50	25.00	32.00	0.40	**D4051700M-25FM**
		11/16	0.687	17.46	69.80	91.50	145.50	25.00	32.00	0.30	**D4050687I-25FM**
		–	0.709	18.00	72.00	95.50	149.50	25.00	32.00	0.20	**D4051800M-25FM**

IC Inserts

ISO Material	Part No.	Insert Screw	Torx® Driver	Admissible Tightening Torque
P	**4T-05T203-P**	7243-T6-1	8T-6	4.4 in-lbs (0.5 N-m)
S M	**4T-05T203-M**			
H	**4T-05T203-H**			
K	**4T-05T203-K**			
N	**4T-05T203-N**			

Expected Hole Tolerances

Length	in	mm
2xD	-0.004 / +0.008	-0.10 / +0.20
3xD	-0.004 / +0.008	-0.10 / +0.20
4xD	-0.004 / +0.010	-0.10 / +0.25

A91: 66
Key on A91: 1
A91: 59 - 61
A91: 58

ⓘ = Imperial (in)
ⓜ = Metric (mm)
IC inserts sold in quantities of 10.
Insert screws sold in quantities of 10.

4TEX® Drill Holders | Imperial Shank

06 Series | Diameter Range: 0.748" - 0.827" (19.00 mm - 21.00 mm)*

*See the 4TEX drill catalog (A55-4TX) for all diameters available.

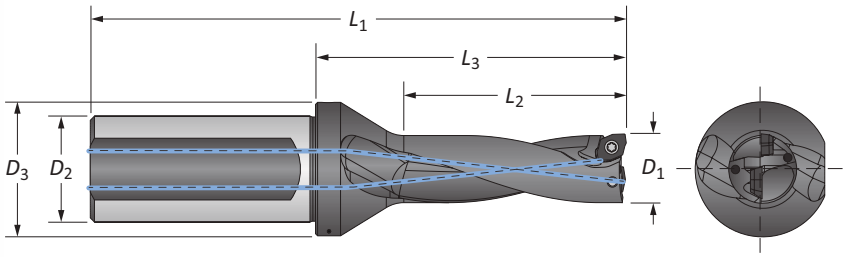

Imperial Shank

Length	Fractional Equivalent	D_1 in	D_1 mm	Body L_2	Body L_3	Body L_1	Shank D_2	Shank D_3	Max Offset	Part No.
2xD	–	0.748	19.00	1.496	2.339	4.465	1.000	1.260	0.031	**D2061900M-100F**
	–	0.787	20.00	1.575	2.417	4.543	1.000	1.260	0.020	**D2062000M-100F**
	13/16	0.813	20.64	1.624	2.457	4.583	1.000	1.260	0.015	**D2060812I-100F**
	–	0.827	21.00	1.654	2.496	4.622	1.000	1.260	0.012	**D2062100M-100F**
3xD	–	0.748	19.00	2.244	3.087	5.213	1.000	1.260	0.031	**D3061900M-100F**
	–	0.787	20.00	2.362	3.205	5.331	1.000	1.260	0.020	**D3062000M-100F**
	13/16	0.813	20.64	2.436	3.264	5.390	1.000	1.260	0.015	**D3060812I-100F**
	–	0.827	21.00	2.480	3.323	5.449	1.000	1.260	0.012	**D3062100M-100F**
4xD	–	0.748	19.00	2.992	3.835	5.961	1.000	1.260	0.031	**D4061900M-100F**
	–	0.787	20.00	3.150	3.992	6.118	1.000	1.260	0.020	**D4062000M-100F**
	13/16	0.813	20.64	3.248	4.071	6.197	1.000	1.260	0.015	**D4060812I-100F**
	–	0.827	21.00	3.307	4.150	6.276	1.000	1.260	0.012	**D4062100M-100F**

IC Inserts

ISO Material	Part No.	Insert Screw	Torx® Driver	Admissible Tightening Torque
P	**4T-06T204-P**	72251-T7-1	8T-7	7.1 in-lbs (0.8 N-m)
S M	**4T-06T204-M**			
H	**4T-06T204-H**			
K	**4T-06T204-K**			
N	**4T-06T204-N**			

Expected Hole Tolerances

Length	in	mm
2xD	-0.004 / +0.008	-0.10 / +0.20
3xD	-0.004 / +0.008	-0.10 / +0.20
4xD	-0.004 / +0.010	-0.10 / +0.25

A91: 66 Key on A91: 1
A91: 59 - 61
A91: 58

ⓘ = Imperial (in)
ⓜ = Metric (mm)
IC inserts sold in quantities of 10.
Insert screws sold in quantities of 10.

4TEX® Drill Holders | Metric Shank

06 Series | Diameter Range: 0.748" - 0.827" (19.00 mm - 21.00 mm)*

*See the 4TEX drill catalog (A55-4TX) for all diameters available.

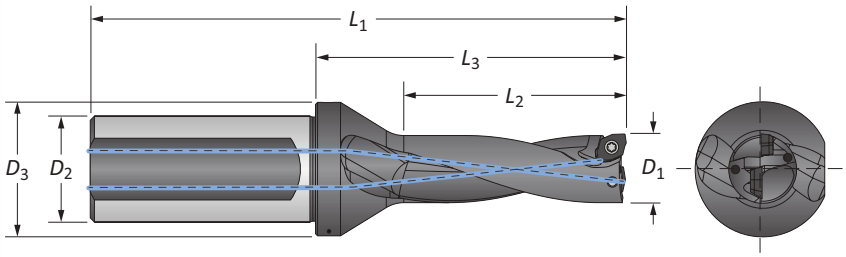

Metric Shank

	Length	Fractional Equivalent	D_1 in	D_1 mm	Body L_2	Body L_3	Body L_1	Shank D_2	Shank D_3	Max Offset	Part No.
m	2xD	–	0.748	19.00	38.00	59.40	113.40	25.00	32.00	0.80	**D2061900M-25FM**
		–	0.787	20.00	40.00	61.40	115.40	25.00	32.00	0.50	**D2062000M-25FM**
		13/16	0.813	20.64	41.25	62.40	116.40	25.00	32.00	0.40	**D2060812I-25FM**
		–	0.827	21.00	42.00	63.40	117.40	25.00	32.00	0.30	**D2062100M-25FM**
	3xD	–	0.748	19.00	57.00	78.40	132.40	25.00	32.00	0.80	**D3061900M-25FM**
		–	0.787	20.00	60.00	81.40	135.40	25.00	32.00	0.50	**D3062000M-25FM**
		13/16	0.813	20.64	61.87	82.90	136.90	25.00	32.00	0.40	**D3060812I-25FM**
		–	0.827	21.00	63.00	84.40	138.40	25.00	32.00	0.30	**D3062100M-25FM**
	4xD	–	0.748	19.00	76.00	97.40	151.40	25.00	32.00	0.80	**D4061900M-25FM**
		–	0.787	20.00	80.00	101.40	155.40	25.00	32.00	0.50	**D4062000M-25FM**
		13/16	0.813	20.64	82.49	103.40	157.40	25.00	32.00	0.40	**D4060812I-25FM**
		–	0.827	21.00	84.00	105.40	159.40	25.00	32.00	0.30	**D4062100M-25FM**

IC Inserts

ISO Material	Part No.	Insert Screw	Torx® Driver	Admissible Tightening Torque
P	**4T-06T204-P**	72251-T7-1	8T-7	7.1 in-lbs (0.8 N-m)
S M	**4T-06T204-M**			
H	**4T-06T204-H**			
K	**4T-06T204-K**			
N	**4T-06T204-N**			

Expected Hole Tolerances

Length	in	mm
2xD	-0.004 / +0.008	-0.10 / +0.20
3xD	-0.004 / +0.008	-0.10 / +0.20
4xD	-0.004 / +0.010	-0.10 / +0.25

A91: 66
Key on A91: 1
A91: 59 - 61
A91: 58

ⓘ = Imperial (in)
ⓜ = Metric (mm)
IC inserts sold in quantities of 10.
Insert screws sold in quantities of 10.

4TEX® Drill Holders | Imperial Shank

07 Series | Diameter Range: 0.866" - 1.024" (22.00 mm - 26.00 mm)*

*See the 4TEX drill catalog (A55-4TX) for all diameters available.

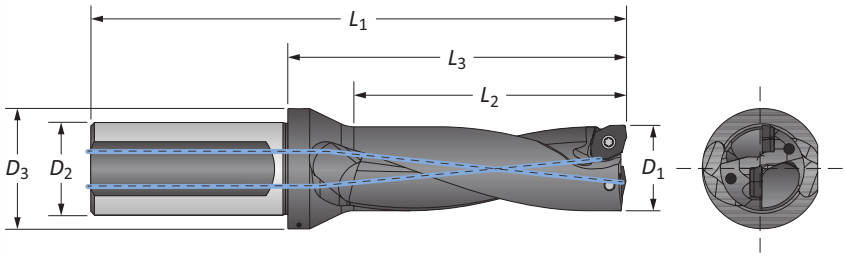

Imperial Shank

Length	Fractional Equivalent	D_1 in	D_1 mm	Body L_2	Body L_3	Body L_1	Shank D_2	Shank D_3	Max Offset	Part No.
2xD	–	0.866	22.00	1.732	2.555	4.681	1.000	1.299	0.047	**D2072200M-100F**
	7/8	0.875	22.22	1.750	2.555	4.681	1.000	1.299	0.043	**D2070875I-100F**
	–	0.906	23.00	1.811	2.634	4.760	1.000	1.299	0.035	**D2072300M-100F**
	15/16	0.937	23.81	1.874	2.673	4.799	1.000	1.299	0.292	**D2070937I-100F**
	–	0.945	24.00	1.890	2.713	4.839	1.000	1.299	0.028	**D2072400M-100F**
	–	1.000	25.40	2.000	2.791	4.917	1.000	1.299	0.013	**D2071000I-100F**
	–	1.024	26.00	2.047	2.870	4.996	1.000	1.299	0.008	**D2072600M-100F**
3xD	–	0.866	22.00	2.598	3.421	5.547	1.000	1.299	0.047	**D3072200M-100F**
	7/8	0.875	22.22	2.625	3.421	5.547	1.000	1.299	0.043	**D3070875I-100F**
	–	0.906	23.00	2.717	3.539	5.665	1.000	1.299	0.035	**D3072300M-100F**
	15/16	0.937	23.81	2.811	3.598	5.724	1.000	1.299	0.292	**D3070937I-100F**
	–	0.945	24.00	2.835	3.657	5.783	1.000	1.299	0.028	**D3072400M-100F**
	–	1.000	25.40	3.000	3.776	5.902	1.000	1.299	0.013	**D3071000I-100F**
	–	1.024	26.00	3.071	3.894	6.020	1.000	1.299	0.008	**D3072600M-100F**
4xD	–	0.866	22.00	3.465	4.287	6.413	1.000	1.299	0.047	**D4072200M-100F**
	7/8	0.875	22.22	3.500	4.287	6.413	1.000	1.299	0.043	**D4070875I-100F**
	–	0.906	23.00	3.622	4.445	6.571	1.000	1.299	0.035	**D4072300M-100F**
	15/16	0.937	23.81	3.748	4.524	6.650	1.000	1.299	0.292	**D4070937I-100F**
	–	0.945	24.00	3.780	4.602	6.728	1.000	1.299	0.028	**D4072400M-100F**
	–	1.000	25.40	4.000	4.760	6.886	1.000	1.299	0.013	**D4071000I-100F**
	–	1.024	26.00	4.094	4.917	7.043	1.000	1.299	0.008	**D4072600M-100F**

IC Inserts

ISO Material	Part No.	Insert Screw	Torx® Driver	Admissible Tightening Torque
P	**4T-070305-P**	72568-T8-1	8T-8	10.6 in-lbs (1.2 N-m)
S M	**4T-070305-M**			
H	**4T-070305-H**			
K	**4T-070305-K**			
N	**4T-070305-N**			

Expected Hole Tolerances

Length	in	mm
2xD	-0.004 / +0.008	-0.10 / +0.20
3xD	-0.004 / +0.008	-0.10 / +0.20
4xD	-0.004 / +0.010	-0.10 / +0.25

A91: 66 A91: 59 - 61 A91: 58
Key on A91: 1

ⓘ = Imperial (in)
ⓜ = Metric (mm)
IC inserts sold in quantities of 10.
Insert screws sold in quantities of 10.

4TEX® Drill Holders | Metric Shank

07 Series | Diameter Range: 0.866" - 1.024" (22.00 mm - 26.00 mm)*

*See the 4TEX drill catalog (A55-4TX) for all diameters available.

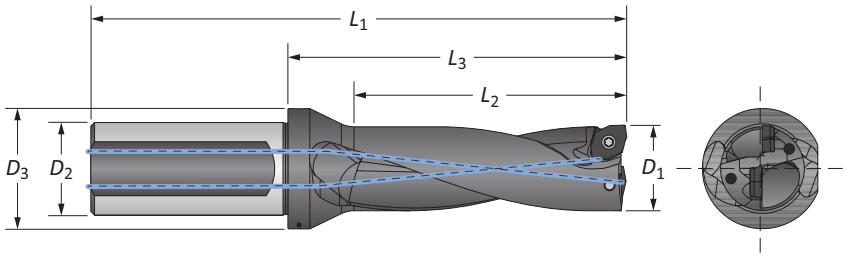

Metric Shank

	Length	Fractional Equivalent	D_1 in	D_1 mm	Body L_2	Body L_3	Body L_1	Shank D_2	Shank D_3	Max Offset	Part No.
	2xD	–	0.866	22.00	44.00	64.90	118.90	25.00	33.00	1.20	**D2072200M-25FM**
		7/8	0.875	22.22	44.45	64.90	118.90	25.00	33.00	1.10	**D2070875I-25FM**
		–	0.906	23.00	46.00	66.90	120.90	25.00	33.00	0.90	**D2072300M-25FM**
		15/16	0.937	23.81	47.60	67.90	121.90	25.00	33.00	7.40	**D2070937I-25FM**
		–	0.945	24.00	48.00	68.90	122.90	25.00	33.00	0.70	**D2072400M-25FM**
		–	1.000	25.40	50.80	70.90	124.90	25.00	33.00	0.30	**D2071000I-25FM**
		–	1.024	26.00	52.00	72.90	126.90	25.00	33.00	0.20	**D2072600M-25FM**
	3xD	–	0.866	22.00	66.00	86.90	140.90	25.00	33.00	1.20	**D3072200M-25FM**
		7/8	0.875	22.22	66.68	86.90	140.90	25.00	33.00	1.10	**D3070875I-25FM**
		–	0.906	23.00	69.00	89.90	143.90	25.00	33.00	0.90	**D3072300M-25FM**
m		15/16	0.937	23.81	71.40	91.40	145.40	25.00	33.00	7.40	**D3070937I-25FM**
		–	0.945	24.00	72.00	92.90	146.90	25.00	33.00	0.70	**D3072400M-25FM**
		–	1.000	25.40	76.20	95.90	149.90	25.00	33.00	0.30	**D3071000I-25FM**
		–	1.024	26.00	78.00	99.00	153.00	25.00	33.00	0.20	**D3072600M-25FM**
	4xD	–	0.866	22.00	88.00	109.00	163.00	25.00	33.00	1.20	**D4072200M-25FM**
		7/8	0.875	22.22	88.90	108.90	162.90	25.00	33.00	1.10	**D4070875I-25FM**
		–	0.906	23.00	92.00	113.00	167.00	25.00	33.00	0.90	**D4072300M-25FM**
		15/16	0.937	23.81	95.20	114.90	168.90	25.00	33.00	7.40	**D4070937I-25FM**
		–	0.945	24.00	96.00	117.00	171.00	25.00	33.00	0.70	**D4072400M-25FM**
		–	1.000	25.40	101.60	120.90	174.90	25.00	33.00	0.30	**D4071000I-25FM**
		–	1.024	26.00	104.00	125.00	179.00	25.00	33.00	0.20	**D4072600M-25FM**

IC Inserts

ISO Material	Part No.	Insert Screw	Torx® Driver	Admissible Tightening Torque
P	**4T-070305-P**	72568-T8-1	8T-8	10.6 in-lbs (1.2 N-m)
S M	**4T-070305-M**			
H	**4T-070305-H**			
K	**4T-070305-K**			
N	**4T-070305-N**			

Expected Hole Tolerances

Length	in	mm
2xD	-0.004 / +0.008	-0.10 / +0.20
3xD	-0.004 / +0.008	-0.10 / +0.20
4xD	-0.004 / +0.010	-0.10 / +0.25

A91: 66
Key on A91: 1
A91: 59 - 61
A91: 58

i = Imperial (in)
m = Metric (mm)
IC inserts sold in quantities of 10.
Insert screws sold in quantities of 10.

4TEX® Drill Holders | Imperial Shank

09 Series | Diameter Range: 1.063" - 1.250" (27.00 mm - 31.75 mm)*

*See the 4TEX drill catalog (A55-4TX) for all diameters available.

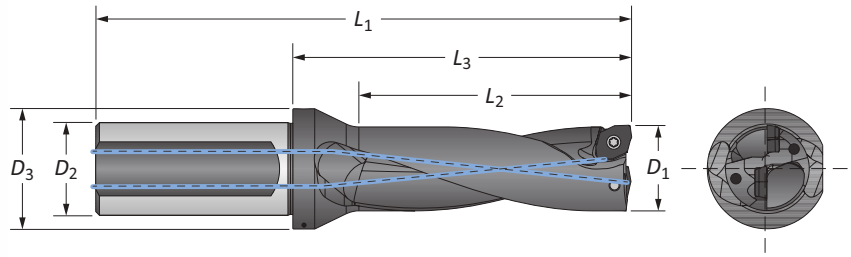

Imperial Shank

Length	Fractional Equivalent	D_1 in	D_1 mm	Body L_2	Body L_3	Body L_1	Shank D_2	Shank D_3	Max Offset	Part No.
2xD	–	1.063	27.00	2.126	3.020	5.343	1.250	1.614	0.063	**D2092700M-125F**
	–	1.102	28.00	2.205	3.098	5.421	1.250	1.614	0.051	**D2092800M-125F**
	1-1/8	1.125	28.58	2.250	3.138	5.461	1.250	1.614	0.046	**D2091125I-125F**
	–	1.142	29.00	2.283	3.177	5.500	1.250	1.614	0.043	**D2092900M-125F**
	–	1.181	30.00	2.362	3.256	5.579	1.250	1.693	0.031	**D2093000M-125F**
	1-3/16	1.187	30.15	2.374	3.256	5.579	1.250	1.693	0.032	**D2091187I-125F**
	–	1.220	31.00	2.441	3.335	5.657	1.250	1.693	0.024	**D2093100M-125F**
	1-1/4	1.250	31.75	2.500	3.374	5.697	1.250	1.693	0.019	**D2091250I-125F**
3xD	–	1.063	27.00	3.189	4.083	6.406	1.250	1.614	0.063	**D3092700M-125F**
	–	1.102	28.00	3.307	4.201	6.524	1.250	1.614	0.051	**D3092800M-125F**
	1-1/8	1.125	28.58	3.375	4.260	6.583	1.250	1.614	0.046	**D3091125I-125F**
	–	1.142	29.00	3.425	4.319	6.642	1.250	1.614	0.043	**D3092900M-125F**
	–	1.181	30.00	3.543	4.437	6.760	1.250	1.693	0.031	**D3093000M-125F**
	1-3/16	1.187	30.15	3.561	4.437	6.760	1.250	1.693	0.032	**D3091187I-125F**
	–	1.220	31.00	3.661	4.555	6.878	1.250	1.693	0.024	**D3093100M-125F**
	1-1/4	1.250	31.75	3.750	4.614	6.937	1.250	1.693	0.019	**D3091250I-125F**
4xD	–	1.063	27.00	4.252	5.146	7.469	1.250	1.614	0.063	**D4092700M-125F**
	–	1.102	28.00	4.409	5.303	7.626	1.250	1.614	0.051	**D4092800M-125F**
	1-1/8	1.125	28.58	4.500	5.382	7.705	1.250	1.614	0.046	**D4091125I-125F**
	–	1.142	29.00	4.567	5.461	7.783	1.250	1.614	0.043	**D4092900M-125F**
	–	1.181	30.00	4.724	5.618	7.941	1.250	1.693	0.031	**D4093000M-125F**
	1-3/16	1.187	30.15	4.748	5.618	7.941	1.250	1.693	0.032	**D4091187I-125F**
	–	1.220	31.00	4.882	5.776	8.098	1.250	1.693	0.024	**D4093100M-125F**
	1-1/4	1.250	31.75	5.000	5.854	8.177	1.250	1.693	0.019	**D4091250I-125F**

IC Inserts

ISO Material	Part No.	Insert Screw	Torx® Driver	Admissible Tightening Torque
P	**4T-09T306-P**	738-T10-1	8T-10	17.7 in-lbs (2.0 N-m)
S M	**4T-09T306-M**			
H	**4T-09T306-H**			
K	**4T-09T306-K**			
N	**4T-09T306-N**			

Expected Hole Tolerances

Length	in	mm
2xD	-0.006 / +0.010	-0.15 / +0.25
3xD	-0.006 / +0.010	-0.15 / +0.25
4xD	-0.006 / +0.012	-0.15 / +0.30

A91: 66 Key on A91: 1
A91: 59 - 61
A91: 58

ⓘ = Imperial (in)
ⓜ = Metric (mm)
IC inserts sold in quantities of 10.
Insert screws sold in quantities of 10.

4TEX® Drill Holders | Metric Shank

09 Series | Diameter Range: 1.063" - 1.250" (27.00 mm - 31.75 mm)*

*See the 4TEX drill catalog (A55-4TX) for all diameters available.

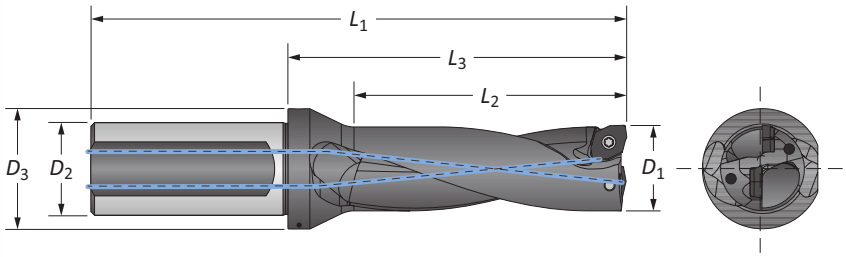

Metric Shank

	Length	Fractional Equivalent	D_1 in	D_1 mm	Body L_2	Body L_3	Body L_1	Shank D_2	Shank D_3	Max Offset	Part No.
m	2xD	–	1.063	27.00	54.00	76.70	135.70	32.00	41.00	1.60	**D2092700M-32FM**
		–	1.102	28.00	56.00	78.70	137.70	32.00	41.00	1.30	**D2092800M-32FM**
		1-1/8	1.125	28.58	57.15	79.70	138.70	32.00	41.00	1.20	**D2091125I-32FM**
		–	1.142	29.00	58.00	80.70	139.70	32.00	41.00	1.10	**D2092900M-32FM**
		–	1.181	30.00	60.00	82.70	141.70	32.00	43.00	0.80	**D2093000M-32FM**
		1-3/16	1.187	30.15	60.30	82.70	141.70	32.00	43.00	0.82	**D2091187I-32FM**
		–	1.220	31.00	62.00	84.70	143.70	32.00	43.00	0.60	**D2093100M-32FM**
		1-1/4	1.250	31.75	63.50	85.70	144.70	32.00	43.00	0.50	**D2091250I-32FM**
	3xD	–	1.063	27.00	81.00	103.70	162.70	32.00	41.00	1.60	**D3092700M-32FM**
		–	1.102	28.00	84.00	106.70	165.70	32.00	41.00	1.30	**D3092800M-32FM**
		1-1/8	1.125	28.58	85.73	108.20	167.20	32.00	41.00	1.20	**D3091125I-32FM**
		–	1.142	29.00	87.00	109.70	168.70	32.00	41.00	1.10	**D3092900M-32FM**
		–	1.181	30.00	90.00	112.70	171.70	32.00	43.00	0.80	**D3093000M-32FM**
		1-3/16	1.187	30.15	90.45	112.70	171.70	32.00	43.00	0.82	**D3091187I-32FM**
		–	1.220	31.00	93.00	115.70	174.70	32.00	43.00	0.60	**D3093100M-32FM**
		1-1/4	1.250	31.75	95.25	117.20	176.20	32.00	43.00	0.50	**D3091250I-32FM**
	4xD	–	1.063	27.00	108.00	130.70	189.70	32.00	41.00	1.60	**D4092700M-32FM**
		–	1.102	28.00	112.00	134.70	193.70	32.00	41.00	1.30	**D4092800M-32FM**
		1-1/8	1.125	28.58	114.30	136.70	195.70	32.00	41.00	1.20	**D4091125I-32FM**
		–	1.142	29.00	116.00	138.70	197.70	32.00	41.00	1.10	**D4092900M-32FM**
		–	1.181	30.00	120.00	142.70	201.70	32.00	43.00	0.80	**D4093000M-32FM**
		1-3/16	1.187	30.15	120.60	142.70	201.70	32.00	43.00	0.82	**D4091187I-32FM**
		–	1.220	31.00	124.00	146.70	205.70	32.00	43.00	0.60	**D4093100M-32FM**
		1-1/4	1.250	31.75	127.00	148.70	207.70	32.00	43.00	0.50	**D4091250I-32FM**

IC Inserts

ISO Material	Part No.	Insert Screw	Torx® Driver	Admissible Tightening Torque
P	**4T-09T306-P**	738-T10-1	8T-10	17.7 in-lbs (2.0 N-m)
S M	**4T-09T306-M**			
H	**4T-09T306-H**			
K	**4T-09T306-K**			
N	**4T-09T306-N**			

Expected Hole Tolerances

Length	in	mm
2xD	-0.006 / +0.010	-0.15 / +0.25
3xD	-0.006 / +0.010	-0.15 / +0.25
4xD	-0.006 / +0.012	-0.15 / +0.30

A91: 66 Key on A91: 1
A91: 59 - 61
A91: 58

ⓘ = Imperial (in)
ⓜ = Metric (mm)
IC inserts sold in quantities of 10.
Insert screws sold in quantities of 10.

4TEX® Drill Holders | Imperial Shank

11 Series | Diameter Range: 1.260" - 1.500" (32.00 mm - 38.10 mm)*

*See the 4TEX drill catalog (A55-4TX) for all diameters available.

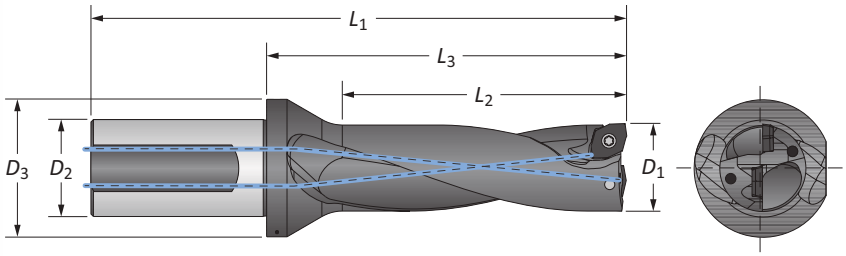

Imperial Shank

Length		Fractional Equivalent	D_1 in	D_1 mm	Body L_2	Body L_3	Body L_1	Shank D_2	Shank D_3	Max Offset	Part No.
2xD		–	1.260	32.00	2.520	3.953	6.669	1.500	2.126	0.087	**D2113200M-150F**
		–	1.299	33.00	2.598	4.031	6.748	1.500	2.126	0.075	**D2113300M-150F**
		1-5/16	1.312	33.32	2.624	4.031	6.748	1.500	2.126	0.073	**D2111312I-150F**
		–	1.339	34.00	2.677	4.110	6.827	1.500	2.126	0.067	**D2113400M-150F**
		1-3/8	1.375	34.92	2.750	4.110	6.827	1.500	2.126	0.056	**D2111375I-150F**
		1-1/2	1.500	38.10	3.000	4.425	7.142	1.500	2.126	0.027	**D2111500I-150F**
3xD		–	1.260	32.00	3.780	5.213	7.929	1.500	2.126	0.087	**D3113200M-150F**
		–	1.299	33.00	3.898	5.331	8.047	1.500	2.126	0.075	**D3113300M-150F**
		1-5/16	1.312	33.32	3.936	5.331	8.047	1.500	2.126	0.073	**D3111312I-150F**
		–	1.339	34.00	4.016	5.449	8.165	1.500	2.126	0.067	**D3113400M-150F**
		1-3/8	1.375	34.92	4.125	5.449	8.165	1.500	2.126	0.056	**D3111375I-150F**
		1-1/2	1.500	38.10	4.500	5.921	8.638	1.500	2.126	0.027	**D3111500I-150F**
4xD		–	1.260	32.00	5.039	6.079	8.795	1.500	2.126	0.087	**D4113200M-150F**
		–	1.299	33.00	5.197	6.236	8.953	1.500	2.126	0.075	**D4113300M-150F**
		1-5/16	1.312	33.32	5.248	6.236	8.953	1.500	2.126	0.073	**D4111312I-150F**
		–	1.339	34.00	5.354	6.394	9.110	1.500	2.126	0.067	**D4113400M-150F**
		1-3/8	1.375	34.92	5.500	6.394	9.110	1.500	2.126	0.056	**D4111375I-150F**
		1-1/2	1.500	38.10	6.000	7.024	9.740	1.500	2.126	0.027	**D4111500I-150F**

IC Inserts

ISO Material	Part No.	Insert Screw	Torx® Driver	Admissible Tightening Torque
P	**4T-11T306-P**	7488-T15-1	8T-15	30.9 in-lbs (3.5 N-m)
S M	**4T-11T306-M**			
H	**4T-11T306-H**			
K	**4T-11T306-K**			
N	**4T-11T306-N**			

Expected Hole Tolerances

Length	in	mm
2xD	-0.006 / +0.010	-0.15 / +0.25
3xD	-0.006 / +0.010	-0.15 / +0.25
4xD	-0.006 / +0.012	-0.15 / +0.30

A91: 66 Key on A91: 1
A91: 59 - 61
A91: 58

ⓘ = Imperial (in)
ⓜ = Metric (mm)
IC inserts sold in quantities of 10.
Insert screws sold in quantities of 10.

4TEX® Drill Holders | Metric Shank

11 Series | Diameter Range: 1.260" - 1.500" (32.00 mm - 38.10 mm)*

*See the 4TEX drill catalog (A55-4TX) for all diameters available.

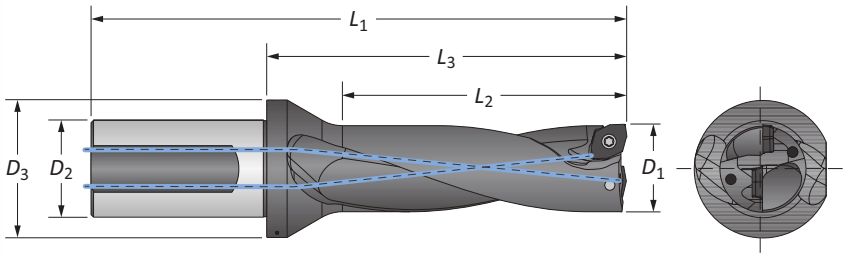

Metric Shank

	Length	Fractional Equivalent	D_1 in	D_1 mm	Body L_2	Body L_3	Body L_1	Shank D_2	Shank D_3	Max Offset	Part No.
	2xD	–	1.260	32.00	64.00	100.40	169.40	40.00	54.00	2.20	**D2113200M-40FM**
		–	1.299	33.00	66.00	102.40	171.40	40.00	54.00	1.90	**D2113300M-40FM**
		1-5/16	1.312	33.32	66.65	102.40	171.40	40.00	54.00	1.84	**D2111312I-40FM**
		–	1.339	34.00	68.00	104.40	173.40	40.00	54.00	1.70	**D2113400M-40FM**
		1-3/8	1.375	34.92	69.85	104.40	173.40	40.00	54.00	1.42	**D2111375I-40FM**
		1-1/2	1.500	38.10	76.20	112.40	181.40	40.00	54.00	0.69	**D2111500I-40FM**
	3xD	–	1.260	32.00	96.00	132.40	201.40	40.00	54.00	2.20	**D3113200M-40FM**
		–	1.299	33.00	99.00	135.40	204.40	40.00	54.00	1.90	**D3113300M-40FM**
ⓜ		1-5/16	1.312	33.32	99.97	135.40	204.40	40.00	54.00	1.84	**D3111312I-40FM**
		–	1.339	34.00	102.00	138.40	207.40	40.00	54.00	1.70	**D3113400M-40FM**
		1-3/8	1.375	34.92	104.78	138.40	207.40	40.00	54.00	1.42	**D3111375I-40FM**
		1-1/2	1.500	38.10	114.30	150.40	219.40	40.00	54.00	0.69	**D3111500I-40FM**
	4xD	–	1.260	32.00	128.00	154.40	223.40	40.00	54.00	2.20	**D4113200M-40FM**
		–	1.299	33.00	132.00	158.40	227.40	40.00	54.00	1.90	**D4113300M-40FM**
		1-5/16	1.312	33.32	133.30	158.40	227.40	40.00	54.00	1.84	**D4111312I-40FM**
		–	1.339	34.00	136.00	162.40	231.40	40.00	54.00	1.70	**D4113400M-40FM**
		1-3/8	1.375	34.92	139.70	162.40	231.40	40.00	54.00	1.42	**D4111375I-40FM**
		1-1/2	1.500	38.10	152.40	178.40	247.40	40.00	54.00	0.69	**D4111500I-40FM**

IC Inserts

ISO Material	Part No.	Insert Screw	Torx® Driver	Admissible Tightening Torque
P	**4T-11T306-P**	7488-T15-1	8T-15	30.9 in-lbs (3.5 N-m)
S M	**4T-11T306-M**			
H	**4T-11T306-H**			
K	**4T-11T306-K**			
N	**4T-11T306-N**			

Expected Hole Tolerances

Length	in	mm
2xD	-0.006 / +0.010	-0.15 / +0.25
3xD	-0.006 / +0.010	-0.15 / +0.25
4xD	-0.006 / +0.012	-0.15 / +0.30

A91: 66 Key on A91: 1
A91: 59 - 61
A91: 58

ⓘ = Imperial (in)
ⓜ = Metric (mm)
IC inserts sold in quantities of 10.
Insert screws sold in quantities of 10.

4TEX® Drill Holders | Imperial Shank

14 Series | Diameter Range: 1.535" - 1.562" (39.00 mm - 39.67 mm)*

*See the 4TEX drill catalog (A55-4TX) for all diameters available.

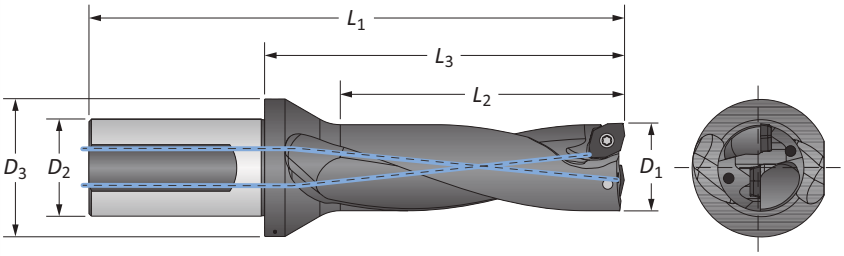

Imperial Shank

Length	Fractional Equivalent	D_1 in	D_1 mm	Body L_2	Body L_3	Body L_1	Shank D_2	Shank D_3	Max Offset	Part No.
2xD	–	1.535	39.00	3.071	4.346	7.063	1.500	2.126	0.110	**D2143900M-150F**
	1-9/16	1.562	39.67	3.124	4.346	7.063	1.500	2.126	0.103	**D2141562I-150F**
3xD	–	1.535	39.00	4.606	5.882	8.598	1.500	2.126	0.110	**D3143900M-150F**
	1-9/16	1.562	39.67	4.686	5.882	8.598	1.500	2.126	0.103	**D3141562I-150F**
4xD	–	1.535	39.00	6.142	7.417	10.134	1.500	2.126	0.110	**D4143900M-150F**
	1-9/16	1.562	39.67	6.248	7.417	10.134	1.500	2.126	0.103	**D4141562I-150F**

IC Inserts

ISO Material	Part No.	Insert Screw	Torx® Driver	Admissible Tightening Torque
P	4T-140408-P	7595-T20-1	8T-20	39.8 in-lbs (4.5 N-m)
S M	4T-140408-M			
H	4T-140408-H			
K	4T-140408-K			
N	4T-140408-N			

Expected Hole Tolerances

Length	in	mm
2xD	-0.008 / +0.012	-0.20 / +0.30
3xD	-0.008 / +0.012	-0.20 / +0.30
4xD	-0.008 / +0.014	-0.20 / +0.35

A91: 66 Key on A91: 1
A91: 59 - 61
A91: 58

ⓘ = Imperial (in)
ⓜ = Metric (mm)
IC inserts sold in quantities of 10.
Insert screws sold in quantities of 10.

4TEX® Drill Holders | Metric Shank

14 Series | Diameter Range: 1.535" - 1.562" (39.00 mm - 39.67 mm)*

*See the 4TEX drill catalog (A55-4TX) for all diameters available.

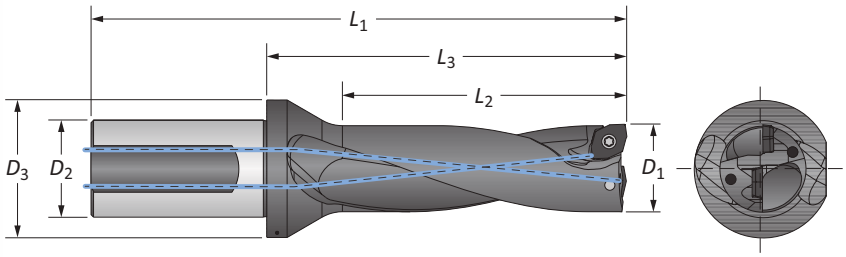

Metric Shank

	Length	Fractional Equivalent	D_1 in	D_1 mm	Body L_2	Body L_3	Body L_1	Shank D_2	Shank D_3	Max Offset	Part No.
m	2xD	–	1.535	39.00	78.00	110.40	179.40	40.00	54.00	2.80	**D2143900M-40FM**
		1-9/16	1.562	39.67	79.40	110.40	179.40	40.00	54.00	2.61	**D2141562I-40FM**
	3xD	–	1.535	39.00	117.00	149.40	218.40	40.00	54.00	2.80	**D3143900M-40FM**
		1-9/16	1.562	39.67	119.02	149.40	218.40	40.00	54.00	2.61	**D3141562I-40FM**
	4xD	–	1.535	39.00	156.00	188.40	257.40	40.00	54.00	2.80	**D4143900M-40FM**
		1-9/16	1.562	39.67	158.70	188.40	257.40	40.00	54.00	2.61	**D4141562I-40FM**

IC Inserts

ISO Material	Part No.	Insert Screw	Torx® Driver	Admissible Tightening Torque
P	**4T-140408-P**	7595-T20-1	8T-20	39.8 in-lbs (4.5 N-m)
S M	**4T-140408-M**			
H	**4T-140408-H**			
K	**4T-140408-K**			
N	**4T-140408-N**			

Expected Hole Tolerances

Length	in	mm
2xD	-0.008 / +0.012	-0.20 / +0.30
3xD	-0.008 / +0.012	-0.20 / +0.30
4xD	-0.008 / +0.014	-0.20 / +0.35

A91: 66 A91: 59 - 61 A91: 58
Key on A91: 1

i = Imperial (in)
m = Metric (mm)
IC inserts sold in quantities of 10.
Insert screws sold in quantities of 10.

Eccentric Sleeves

For Cutting Diameter / Center Height Adjustment

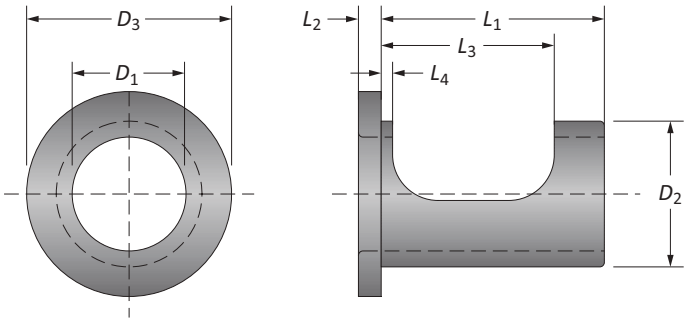

	Sleeve Dimensions								Adjustment Range	
	D_1	D_2	D_3	L_2	L_3	L_4	L_1	Part No.	Diameter*	Center Height
i	0.750	1.000	1.614	0.157	1.593	0.118	1.837	**SLEEVE-075F**	-0.008 to +0.016	-0.006 to +0.008
i	1.000	1.250	1.929	0.236	1.593	0.098	1.995	**SLEEVE-100F**	-0.008 to +0.016	-0.006 to +0.008
i	1.250	1.500	2.283	0.236	1.693	0.098	2.087	**SLEEVE-125F**	-0.008 to +0.016	-0.006 to +0.008
i	1.500	2.000	2.913	0.236	1.929	0.118	2.481	**SLEEVE-150F**	-0.008 to +0.024	-0.008 to +0.012
m	25.00	32.00	49.00	6.00	39.00	2.50	54.00	**SLEEVE-25FM**	-0.20 to +0.40	-0.15 to +0.20
m	32.00	40.00	58.00	6.00	43.00	2.50	59.00	**SLEEVE-32FM**	-0.20 to +0.40	-0.15 to +0.20
m	40.00	50.00	74.00	6.00	49.00	3.00	69.00	**SLEEVE-40FM**	-0.20 to +0.40	-0.20 to +0.30

*Diameter adjustment range refers to the cutting diameter.

Milling Applications
Peripheral Adjustment Position

Lathe Applications
Front Adjustment Position

i = Imperial (in)
m = Metric (mm)

Diameter Adjustment

Milling and Lathe Applications

For Milling Applications

1. Assemble the 4TEX drill, eccentric sleeve, and tool holder. Do not tighten the tool holder set screws.
2. Using the peripheral marks for milling machines, align the reference indentation on the holder with the 0 (zero) mark on the eccentric sleeve to have no offset.
3. Rotate the sleeve in the (+) or (-) direction to increase or decrease the nominal diameter.
4. Once the drill has arrived at the desired diameter, firmly tighten the top set screw first and then tighten the bottom set screw.

NOTICE: Eccentric sleeves are to be used with side-locking tool holders only. Damage may result with other styles of tool holders.

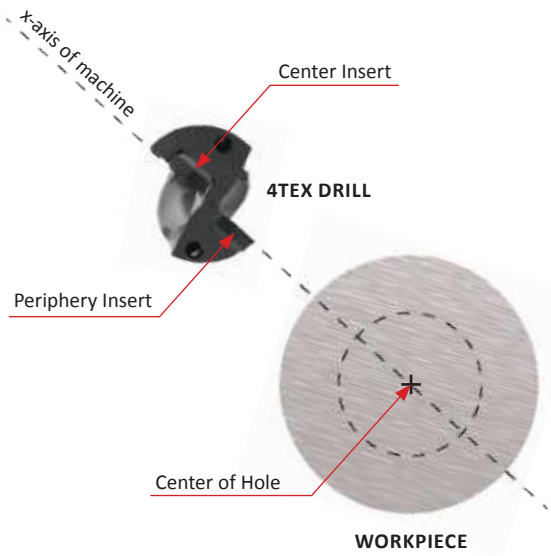

For Lathe Applications

1. Assemble the 4TEX drill into the lathe turret with the top face of the inserts parallel to the x-axis of the machine. This will allow for the diameter offsets to be made using the lathe's x-axis.
2. To increase the nominal diameter, offset the x-axis so the periphery insert moves away from the center of the hole.
3. To decrease the nominal diameter, offset the x-axis so the periphery insert moves toward the center of the hole.

NOTE: Eccentric sleeve is not required when adjusting the diameter of the hole on a lathe.

Center Height Alignment

Proper Center Line Position

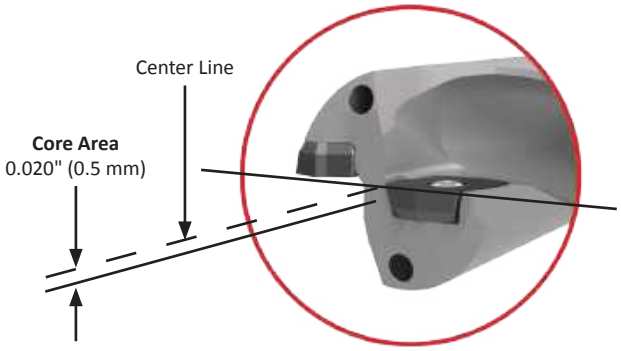

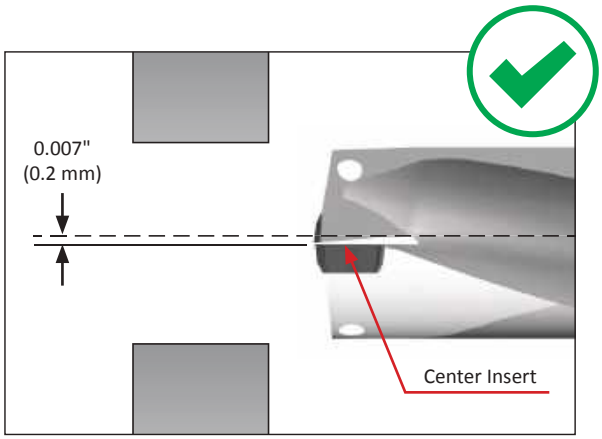

Proper Center Height Alignment

- The correct center height alignment will position the center insert 0.007" (0.2 mm) below the center line.

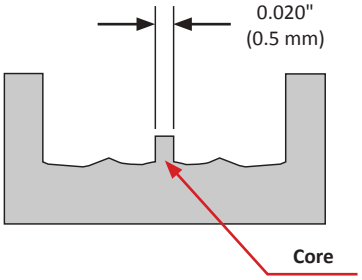

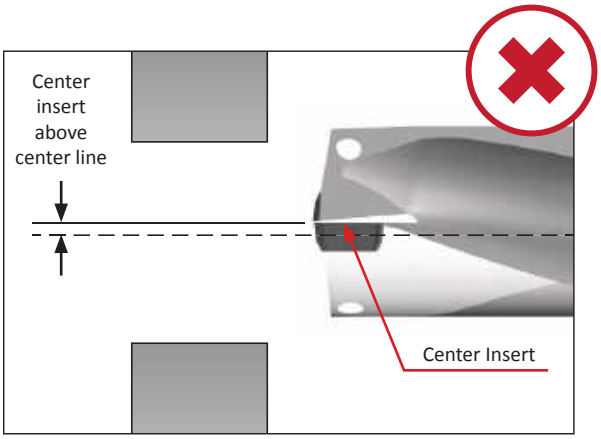

Center Insert Above the Center Line

- This will cause fracturing of the center insert.
- Requires center height adjustment.

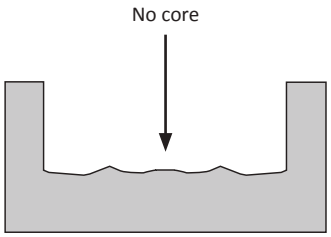

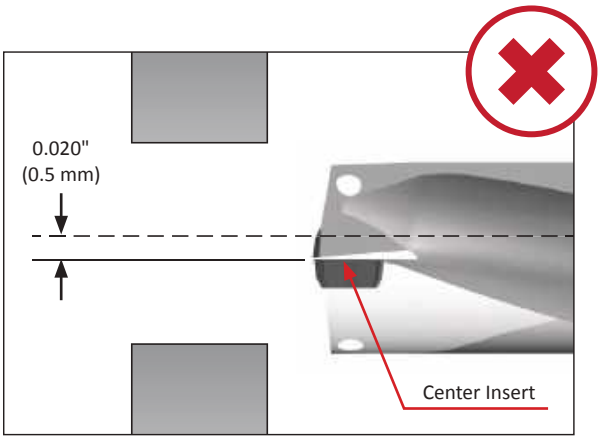

Center Insert Too Far Below Center Line

- This will cause the drill to interfere with the drilled hole.
- This will impede chip evacuation on the periphery insert.
- Requires center height adjustment.

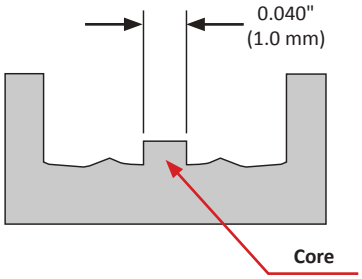

Center Height Alignment

How to Correct Issues

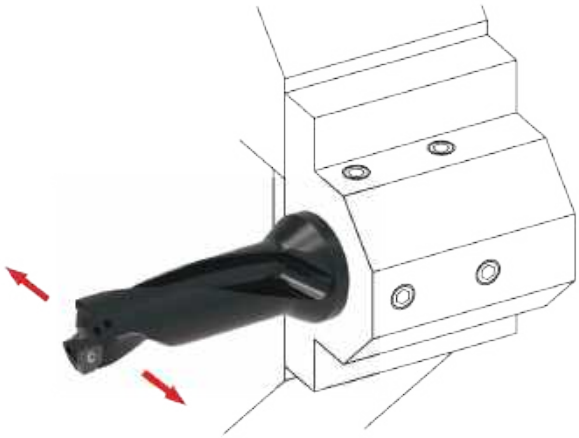

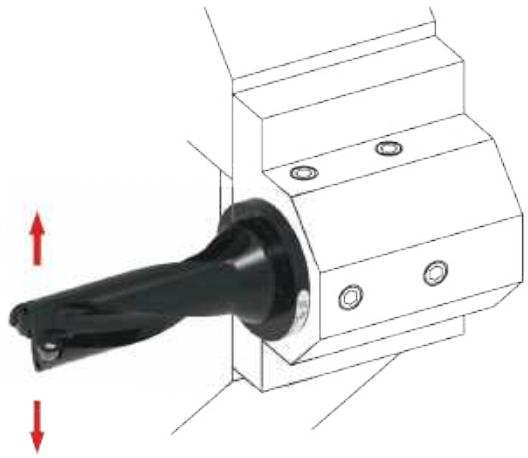

Method 1: Adjustment with X-Axis

1. Rotate the drill body so the position of the center line of the inserts is perpendicular to the lathe's x-axis.
2. Use the x-axis to offset the position of the center line in a (+) or (-) direction to increase or decrease the center core diameter at the bottom of the hole.

NOTE: This method does not allow diameter adjustments using the x-axis.

Method 2: Adjustment with Eccentric Sleeve

1. Assemble the drill to the turret using the eccentric sleeve, positioning the center line of the inserts parallel to the x-axis.
2. Align the reference indentation on the drill to the "0" setting on the flange face.
3. Rotate the sleeve (+) or (-) to increase or decrease the center height of the inserts in order to increase or decrease the core diameter at the bottom of the hole.

NOTE: This method still allows diameter adjustments using the x-axis.

NOTE (applies to both methods): Adjusting the center line of the inserts may affect the hole diameter produced. Method two is preferred to make center height adjustments and compensate for hole diameter with the x-axis.

Recommended Cutting Data | Imperial (inch)

T-A® | GEN2 T-A®

Thin Wall Inserts
Super Cobalt

ISO	Material	Hardness (BHN)	Speed (SFM) - Mist Coolant: AM200® Speed	Speed (SFM) - Mist Coolant: TiAlN Speed	Feed Rate (IPR) by Diameter: 0 series (0.5110" - 0.6959")	1 series (0.6900" - 0.9609")	2 series (0.9610" - 1.3809")	3 series (1.3530" - 1.8829")
P	Structural Steel A36, A285, A516, etc.	100 - 150	125	110	0.012	0.018	0.019	0.020
		150 - 250	115	100	0.011	0.016	0.017	0.019
		250 - 350	105	90	0.010	0.014	0.016	0.018

Notch Point® and 150° Structural Steel Inserts
Super Cobalt

ISO	Material	Hardness (BHN)	Speed (SFM) - Mist Coolant: AM200® Speed	Speed (SFM) - Mist Coolant: TiAlN Speed	Feed Rate (IPR) by Diameter: 0 series (0.5110" - 0.6959")	1 series (0.6900" - 0.9609")	2 series (0.9610" - 1.3809")	3 series (1.3530" - 1.8829")
P	Structural Steel A36, A285, A516, etc.	100 - 150	125	110	0.010	0.012	0.014	0.018
		150 - 250	115	100	0.009	0.011	0.012	0.016
		250 - 350	105	90	0.008	0.010	0.011	0.014

GEN2 T-A Inserts
Super Cobalt

ISO	Material	Hardness (BHN)	Speed (SFM) - Mist Coolant: AM200® Speed	Feed Rate (IPR) by Diameter: 0 series (0.5110" - 0.6959")	1 series (0.6900" - 0.9609")	2 series (0.9610" - 1.3809")	3 series (1.3530" - 1.8829")
P	Structural Steel A36, A285, A516, etc.	100 - 150	125	0.010	0.012	0.014	0.018
		150 - 250	115	0.009	0.011	0.012	0.016
		250 - 350	105	0.008	0.010	0.011	0.014

GEN2 T-A Inserts
Carbide C1 (K35)

ISO	Material	Hardness (BHN)	Speed (SFM) - Mist Coolant: AM300® Speed	Feed Rate (IPR) by Diameter: 0 series (0.5110" - 0.6959")	1 series (0.6900" - 0.9609")	2 series (0.9610" - 1.3809")	3 series (1.3530" - 1.8829")
P	Structural Steel A36, A285, A516, etc.	100 - 150	165	0.008	0.011	0.015	0.017
		150 - 250	155	0.006	0.010	0.013	0.015
		250 - 350	140	0.005	0.009	0.012	0.013

NOTE: The speeds and feeds listed above are based on a rigid setup using air mist through tool coolant. Speed may be increased up to 50% if using high pressure flood or through coolant.
NOTE: If drilling dry without coolant, speed must be reduced significantly based on setup, drill depth, and material hardness. Up to 50% speed and feed reduction may be necessary in these types of applications. Contact the Application Engineering department for assistance. *ext:* **7611** | *email:* **appeng@alliedmachine.com**

Recommended Cutting Data | Metric (mm)

T-A® | GEN2 T-A®

Thin Wall Inserts
Super Cobalt

ISO	Material	Hardness (BHN)	Speed (M/min) - Mist Coolant: AM200® Speed	Speed (M/min) - Mist Coolant: TiAlN Speed	Feed Rate (mm/rev) by Diameter: 0 series (12.98 mm - 17.67 mm)	1 series (17.53 mm - 24.40 mm)	2 series (24.41 mm - 35.06 mm)	3 series (34.37 mm - 47.82 mm)
P	**Structural Steel** A36, A285, A516, etc.	100 - 150	39	34	0.30	0.45	0.48	0.50
		150 - 250	35	31	0.28	0.40	0.43	0.48
		250 - 350	32	28	0.25	0.36	0.40	0.45

Notch Point® and 150° Structural Steel Inserts
Super Cobalt

ISO	Material	Hardness (BHN)	Speed (M/min) - Mist Coolant: AM200® Speed	Speed (M/min) - Mist Coolant: TiAlN Speed	Feed Rate (mm/rev) by Diameter: 0 series (12.98 mm - 17.67 mm)	1 series (17.53 mm - 24.40 mm)	2 series (24.41 mm - 35.06 mm)	3 series (34.37 mm - 47.82 mm)
P	**Structural Steel** A36, A285, A516, etc.	100 - 150	39	34	0.25	0.30	0.36	0.45
		150 - 250	35	31	0.23	0.28	0.30	0.40
		250 - 350	35	28	0.20	0.25	0.28	0.36

GEN2 T-A Inserts
Super Cobalt

ISO	Material	Hardness (BHN)	Speed (M/min) - Mist Coolant: AM200® Speed	Feed Rate (mm/rev) by Diameter: 0 series (12.98 mm - 17.67 mm)	1 series (17.53 mm - 24.40 mm)	2 series (24.41 mm - 35.06 mm)	3 series (34.37 mm - 47.82 mm)
P	**Structural Steel** A36, A285, A516, etc.	100 - 150	39	0.25	0.30	0.36	0.46
		150 - 250	35	0.23	0.28	0.30	0.40
		250 - 350	35	0.20	0.25	0.28	0.36

GEN2 T-A Inserts
Carbide C1 (K35)

ISO	Material	Hardness (BHN)	Speed (M/min) - Mist Coolant: AM300® Speed	Feed Rate (mm/rev) by Diameter: 0 series (12.98 mm - 17.67 mm)	1 series (17.53 mm - 24.40 mm)	2 series (24.41 mm - 35.06 mm)	3 series (34.37 mm - 47.82 mm)
P	**Structural Steel** A36, A285, A516, etc.	100 - 150	50	0.20	0.28	0.38	0.43
		150 - 250	47	0.15	0.25	0.33	0.38
		250 - 350	43	0.13	0.23	0.30	0.33

NOTE: The speeds and feeds listed above are based on a rigid setup using air mist through tool coolant. Speed may be increased up to 50% if using high pressure flood or through coolant.
NOTE: If drilling dry without coolant, speed must be reduced significantly based on setup, drill depth, and material hardness. Up to 50% speed and feed reduction may be necessary in these types of applications. Contact the Application Engineering department for assistance. *ext:* **7611** | *email:* **appeng@alliedmachine.com**

Recommended Cutting Data

GEN3SYS® XT Pro (XTST)

Imperial (inch)

ISO	Material	Hardness (BHN)	Speed (SFM) Mist Coolant AM420 Speed	Feed Rate (IPR) by Diameter 12 series (0.4724" - 0.5117")	13 series (0.5118" - 0.5511")	14 series (0.5512" - 0.5905")	15 series (0.5906" - 0.6298")	16 series (0.6299" - 0.6692")
P	**Structural Steel** A36, A285, A516, etc.	100 - 150	350	0.008	0.009	0.010	0.010	0.012
		150 - 250	300	0.007	0.008	0.009	0.009	0.010
		250 - 350	260	0.006	0.007	0.008	0.008	0.009

Metric (mm)

ISO	Material	Hardness (BHN)	Speed (M/min) Mist Coolant AM420 Speed	Feed Rate (mm/rev) by Diameter 12 series (12.00 mm - 12.99 mm)	13 series (13.00 mm - 13.99 mm)	14 series (14.00 mm - 14.99 mm)	15 series (15.00 mm - 15.99 mm)	16 series (16.00 mm - 16.99 mm)
P	**Structural Steel** A36, A285, A516, etc.	100 - 150	107	0.20	0.22	0.25	0.25	0.30
		150 - 250	91	0.18	0.20	0.23	0.23	0.25
		250 - 350	79	0.15	0.17	0.20	0.20	0.23

Speed and Feed Multiplier

	Depth of Cut <= 1.5xD	> 1.5xD
Speed	See above chart	0.75
Feed	See above chart	0.90

NOTE: The speeds and feeds listed above are based on a rigid setup using air mist through tool coolant. Speed may be increased up to 50% if using high pressure flood or through coolant.
NOTE: If drilling dry without coolant, speed must be reduced significantly based on setup, drill depth, and material hardness. Up to 50% speed and feed reduction may be necessary in these types of applications. Contact the Application Engineering department for assistance. *ext:* **7611** | *email:* **appeng@alliedmachine.com**
NOTE: If drilling material thickness of 0.500" (12.7 mm) or less, a minimum of 10% reduction in feed is required to minimize material deflection.

Feed Rate (IPR) by Diameter							
17 series (0.6693" - 0.7086")	18 series (0.7087" - 0.7873")	20 series (0.7874" - 0.8660")	22 series (0.8661" - 0.9448")	24 series (0.9449" - 1.0235")	26 series (1.0236" - 1.1416")	29 series (1.1417" - 1.2597")	32 series (1.2598" - 1.3780")
0.012	0.014	0.015	0.016	0.017	0.018	0.019	0.019
0.010	0.012	0.014	0.015	0.016	0.017	0.018	0.018
0.009	0.011	0.012	0.013	0.014	0.015	0.016	0.016

Feed Rate (mm/rev) by Diameter							
17 series (17.00 mm - 17.99 mm)	18 series (18.00 mm - 19.99 mm)	20 series (20.00 mm - 21.99 mm)	22 series (22.00 mm - 23.99 mm)	24 series (24.00 mm - 25.99 mm)	26 series (26.00 mm - 28.99 mm)	29 series (29.00 mm - 31.99 mm)	32 series (32.00 mm - 35.00 mm)
0.30	0.36	0.38	0.41	0.43	0.46	0.48	0.48
0.25	0.30	0.36	0.38	0.41	0.43	0.46	0.46
0.23	0.28	0.30	0.33	0.36	0.38	0.41	0.41

NOTE: The speeds and feeds listed above are based on a rigid setup using air mist through tool coolant. Speed may be increased up to 50% if using high pressure flood or through coolant.
NOTE: If drilling dry without coolant, speed must be reduced significantly based on setup, drill depth, and material hardness. Up to 50% speed and feed reduction may be necessary in these types of applications. Contact the Application Engineering department for assistance. *ext:* **7611** | *email:* **appeng@alliedmachine.com**
NOTE: If drilling material thickness of 0.500" (12.7 mm) or less, a minimum of 10% reduction in feed is required to minimize material deflection.

Recommended Drilling Data | Imperial (inch) | Metric (mm)

4TEX® Indexable Drill

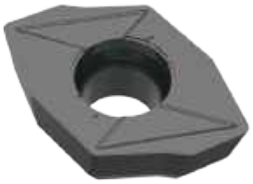

Imperial (inch)

ISO	Material	Hardness (BHN)	Speed (SFM)	Feed Rate (IPR) by Diameter - 2xD, 3xD* 03, 04 Series (0.472" - 0.591")	05 Series (0.625" - 0.709")	06, 07 Series (0.748" - 1.024")	09, 11, 14 Series (1.063" - 1.562")
P	**Structural Steel** A36, A285, A516, etc.	100 - 150	330 - 600	0.0015 - 0.0055	0.0025 - 0.0065	0.003 - 0.008	0.003 - 0.008
		150 - 250	330 - 600	0.0015 - 0.0055	0.0025 - 0.0065	0.003 - 0.008	0.003 - 0.008
		250 - 350	330 - 600	0.0015 - 0.0055	0.0025 - 0.0065	0.003 - 0.008	0.003 - 0.008

*For 4xD tools, begin at low end of feed recommendation.

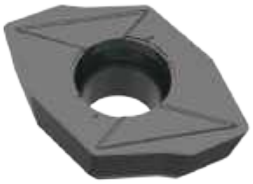

Metric (mm)

ISO	Material	Hardness (BHN)	Speed (m/min)	Feed Rate (mm/rev) by Diameter - 2xD, 3xD* 03, 04 Series (12.00 mm - 15.00 mm)	05 Series (15.88 mm - 18.00 mm)	06, 07 Series (19.00 mm - 26.00 mm)	09, 11, 14 Series (27.00 mm - 39.67 mm)
P	**Structural Steel** A36, A285, A516, etc.	100 - 150	100 - 185	0.05 - 0.13	0.07 - 0.13	0.08 - 0.13	0.08 - 0.13
		150 - 250	100 - 185	0.05 - 0.13	0.07 - 0.13	0.08 - 0.13	0.08 - 0.13
		250 - 350	100 - 185	0.05 - 0.13	0.07 - 0.13	0.08 - 0.13	0.08 - 0.13

*For 4xD tools, begin at low end of feed recommendation.

Insert Geometry Recommendations | Troubleshooting

4TEX® Indexable Drill

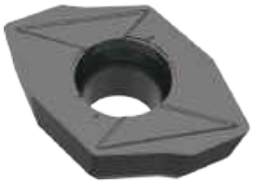

Insert Geometry Recommendations

ISO	Material	Hardness (BHN)	Geometry P	M	K	N	H
P	**Structural Steel** A36, A285, A516, etc.	100 - 150	○	●			
		150 - 250	○	●			
		250 - 350	●				○

Troubleshooting

1. 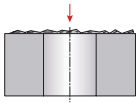

Starting on Uneven Surfaces
- Reduce entry feed by 50% if necessary.

2.

Starting on Angled Surfaces
- Reduce entry feed by 20 - 50%.
- Use lower rake geometry if insert chipping occurs.

3. 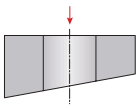

Angled Bore Exit
- Reduce entry feed by 50% on breakout.
- Use tough insert and stable corner radius.

4. 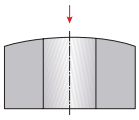

Starting on Convex Surfaces
- Reduce entry feed by 50%.
- Use lower rake geometry if insert chipping occurs.

5. 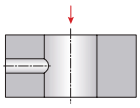

Drilling Through a Cross Hole
- Reduce feed rate 50% if necessary.
- Use good coolant flow and monitor chip packing.
- Use lower rake geometry if insert chipping occurs.

6. 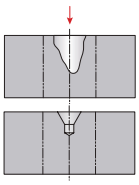

Drilling on a Groove or Large Centering Box
- Reduce entry feed
- Use lower rake geometry for center insert

7. 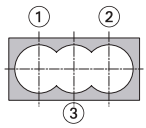

Chain Drilling
- Use good coolant flow.
- Reduce feed rate by 50% for interrupted cut.
- Use lower rake geometry if insert chipping occurs.

8. 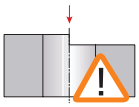

Starting on an Edge
- Reduce entry feed rate by 50%.
- Use lower rake geometry if insert chipping occurs.

9. 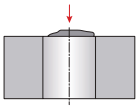

Starting on a Welded Seam
- Reduce entry feed rate by 50%.
- Use lower rake geometry if insert chipping occurs.

10. 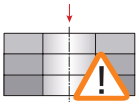

Drilling Through Stacked Plates
- Not recommended.

11. 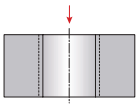

Opening an Existing Hole
- Use flood coolant.

12. 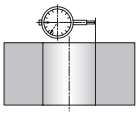

Adjustable
- For mills, use eccentric sleeve with end mill holder.
- For lathes, use x-axis to adjust offset Ø.

NOTE: Refer to maximum offset Ø in data tables.

SECTION A92

AccuPort 432®

AccuPort 432®

Port Contour Cutters | J1926 | ISO6149 | AS5202 | JDS-G173.1

High Performance Multistep Action

Durable and precise, the AccuPort 432 holders provide a strong and rigid platform for the drilling of hydraulic ports. The precision ground insert location on each holder ensures total repeatability and simple, uncomplicated changing of the replaceable inserts.

With the AccuPort technology, you can drill and finish port forms in ***ONE*** operation. Save time and money with AccuPort.

Single operation hydraulic port cutting system.	No pre-drilling required.	Replaceable inserts eliminate regrinding and resetting.

Applicable Industries

Aerospace | Agriculture | Automotive | Marine / Shipbuilding

Your safety and the safety of others is very important. This catalog contains important safety messages. Always read and follow all safety precautions.

This triangle is a safety hazard symbol. It alerts you to potential safety hazards that can cause tool failure and serious injury.

When you see this symbol in the catalog, look for a related safety message that may be near this triangle or referred to in the nearby text.

There are safety signal words also used in the catalog. Safety messages follow these words.

WARNING

WARNING (shown above) means that failure to follow the precautions in this message could result in tool failure and serious injury.

NOTICE means that failure to follow the precautions in this message could result in damage to the tool or machine but not result in personal injury.

NOTE and **IMPORTANT** are also used. These are important that you read and follow but are not safety-related.

Visit www.alliedmachine.com for the most up-to-date information and procedures.

Reference Icons
The following icons will appear throughout the catalog to help you navigate between products.

Setup / Assembly Information
Detailed instructions and information regarding the corresponding part(s)

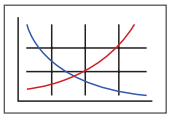

Recommended Cutting Data
Speed and feed recommendations for optimum and safe drilling

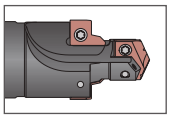

Accuport 432 Holders
Refers to the full details of the holder items included in each kit

Port and Thread Finishing Kits
Lists the available kits complete with AccuPort tool and AccuThread® solid carbide thread mill

Coolant-Through Option
Indicates that the product is coolant through

AccuPort 432® Contents

Introduction Information

Product Overview . . . . . 2 - 4
Product Nomenclature 5

Port Specifications

SAE J-1926 / ISO 11926-1 / MS-16142 . . . . . 6 - 11
ISO 6149-1:2006 / SAE J-2244/1 . . . . . 12 - 13
SAE AS5202 / AND10050 . . . . . 14 - 15
JDS-G173.1 . . . . . 16 - 17

Port and Thread Finishing Kits

SAE J-1926 / ISO 11926-1 / MS-16142 . . . . . 18 - 21
ISO 6149-1:2006 / SAE J-2244/1 . . . . . 22 - 25
SAE AS5202 / AND10050 . . . . . 26 - 27
JDS-G173.1 28

Recommended Cutting Data

Imperial (inch)
- HSS . . . . . 30 - 31
- Carbide . . . . . 32 - 33

Metric (mm)
- HSS . . . . . 34 - 35
- Carbide . . . . . 36 - 37

Product Overview

ONE TOOL | **FOUR** OPERATIONS

4 IN 1

Advanced Solutions, Outstanding Results

As designers and manufacturing engineers push the limits of production technology to improve productivity and performance, Allied Machine has continued to innovate and develop new solutions like the unique AccuPort 432 hydraulic port contour cutter system. Every product in the AccuPort system is designed to deliver maximum performance in a diverse range of hydraulic port cutting applications and demanding manufacturing environments.

Using precision replaceable inserts for both the drilling and port forming operations, AccuPort eliminates the need for tool regrinding and enables absolute repeatability, excellent surface finish, and reduced cost per hole. The AccuPort drills, forms, and precision-finishes the hydraulic port in **one** pass. This replaces up to three separate cutting operations in a single tool to deliver outstanding improvements in productivity, accuracy, and repeatability.

Hydraulic systems are present in an incredibly diverse range of industries. Anywhere a hydraulic port is required, AccuPort can provide a more cost-effective and higher performance solution in a fraction of the time taken for traditional methods using separate drills, special forming tools, and spot facers.

Port Specification		Notes	
Imperial SAE J-1926 ISO 11926-1 MS-16142		Extended minor diameter length option also available	
Metric ISO 6149-1:2006 SAE J-2244/1		Holders made with ID ridge Utilizes inserts with or without ID ridge ID ridge No ID ridge	
Military SAE AS5202		Also conforms to AND10050 specification by using an alternate tap drill size for a UN thread	
John Deere® JDS-G173.1		Adheres to John Deere port standards	

Choosing the Right System

Every product in the AccuPort 432 product line is designed to deliver maximum performance in a diverse range of hydraulic port cutting applications and demanding manufacturing environments. The innovative design delivers the best possible range of benefits in terms of productivity, cost per hole, and tool life.

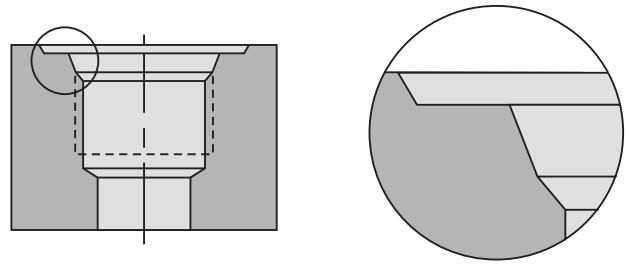

Imperial J-1926-1

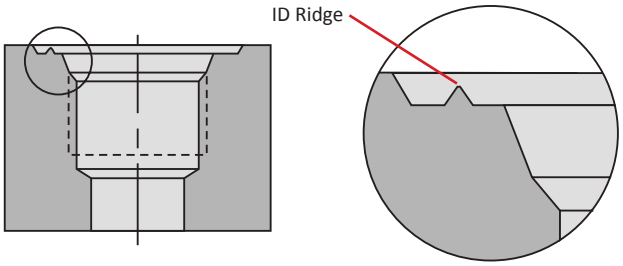

Metric ISO 6149-1: 2006

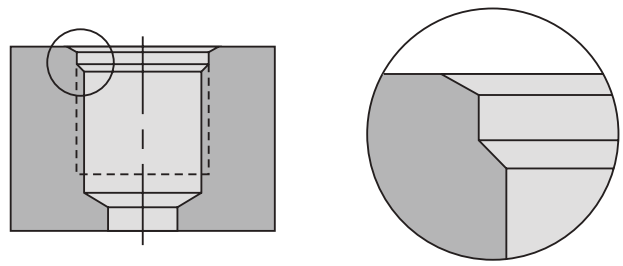

Military SAE AS5202

Common Industry Sectors and Components

Aerospace
Pumps
Landing Gear
Brake Cylinders
Manifolds

Agriculture
Pumps
Manifolds
Cylinders and Rams
Gear Pumps

Automotive
Motor Valves
Relief Valves
Brake Cylinders
Power Steering Pumps

Marine / Shipbuilding
Pumps
Cylinders and Rams
Motors
Manifolds

The Complete Package

Producing fully finished threaded hydraulic ports has never been easier. The Port and Thread Finishing Kit includes the AccuPort 432 contour cutter with a dedicated AccuThread® solid carbide thread mill in a single kit. You also receive the T-A® inserts and port form inserts needed to complete the assembly.

Port kits incorporate the AccuThread solid carbide thread mills to increase the manufacturing flexibility by allowing hydraulic ports to be produced in just two operations. In addition, where a unique port profile is required, Allied Machine provides a dedicated special tooling solution using our extensive tool design and manufacturing experience to meet precise specifications.

Replaceable Inserts Overview

T-A® Drill Insert Grades			
HSS Super Cobalt (T-A® / GEN2 T-A®) Suited for good to rigid machining applications, used for drilling exotic and high alloy materials, or general use when surface speed needs to be increased for use in material hardness up to 350 BHN 121kg.	**Carbide C5 (P40)** (T-A® only) Excellent for drilling free-machining steel, low-/medium-carbon steels, alloy steels, high-strength steels, tool steels, and hardened steels.	**Carbide C1 (K10)** (GEN2 T-A® only) Excellent for drilling free-machining steel, low-/medium-carbon steels, alloy steels, high-strength steels, tool steels, and hardened steels.	**Carbide C3 (K35)** (T-A® only) Designed for drilling grey/white cast irons. The special geometry offers substantial increases in penetration rates and provides exceptional edge strength and tool life.

Port Form Inserts		GEN2 T-A Inserts		T-A Inserts
AM200®	TiAlN	AM300®	AM200®	TiN

GEN2 T-A Standard Geometry

- Designed for rigid machining applications, primarily used for drilling exotic and high alloy materials.
- Ideal for general use when the surface speed needs to be increased.

T-A Standard Geometry

- First choice for machining aluminum.
- Enhanced geometry improves chip formation and hole quality.
- TiN coating improves heat resistance and extends tool life.

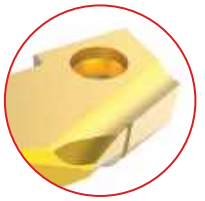

Made-to-Order Tool Specifications

Scan and email a copy of the table below to Allied's Application Engineering Department to receive pricing for a made-to-order AccuPort 432 Port Contour Cutter.

Send emails to appeng@alliedmachine.com

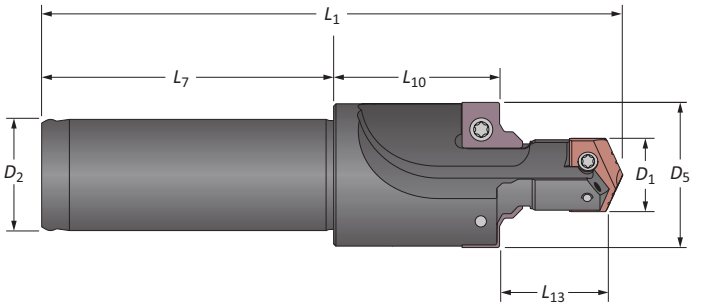

Tube Dash No.	Specification	Port Thread Size	D_1	L_{13}	D_5	L_{10}	L_1	D_2	L_7
	☐ J1926 ☐ ISO 6149 ☐ ISO 6149 (no ridge) ☐ JDS-G173.1 ☐ AS5202								

Company Name _____

Contact Name _____

Phone _____

Distributor Name _____

Fax _____

Product Nomenclature

AccuPort 432 Holders

J1926	–	04	Y	–	063F
1		2	3		4

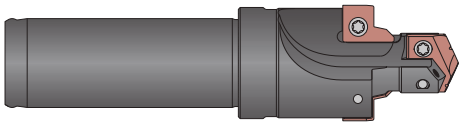

1. Port Specifications	2. Port Tube Dash No.		3. T-A® Insert Series	4. Shank Configuration	
J1926 = Imperial - J1926-1	**04**	**14**	**Y** = Y series	**Imperial**	**Metric**
X1926 = Imperial - J1926-1 (extended minor length)	**05**	**16**	**Z** = Z series	**063F** = 5/8" flanged	**16FM** = 16mm flanged
I6149 = Metric (ISO) - 6149-1	**06**	**18**	**0** = 0 series	**075F** = 3/4" flanged	**20FM** = 20mm flanged
G1731 = John Deere® - G173.1	**08**	**20**	**1** = 1 series	**100F** = 1" flanged	**25FM** = 25mm flanged
AS5202 = Military - AS5202	**10**	**24**	**2** = 2 series	**125F** = 1-1/4" flanged	**32FM** = 32mm flanged
	12	**32**	**3** = 3 series	**150F** = 1-1/2" flanged	
			4 = 4 series		

AccuPort 432 Port Form Inserts

J1926	–	02	R	–	C5	A
1		2	3		4	5

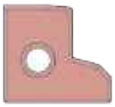

1. Port Specifications	2. Insert Size		3. Port Specifications	4. Substrate	5. Coating
J1926 = Imperial	**02**	**10**	**Blank** = No ID ridge	**C5** = C5 carbide	**A** = TiAlN
I6149 = Metric (ISO)	**03**	**11**	**R** = ID ridge	**C3** = C3 carbide	**H** = AM200®
G1731 = John Deere	**04**	**12**			
AS5202 = Military	**05**	**14**			
	06	**16**			
	07	**20**			
	08	**24**			
	09	**32**			

Reference Key

Symbol	Attribute
A_1	Seal angle
D_1	Minor diameter
D_2	Shank diameter
D_3	Pilot diameter
D_4	Seal angle diameter
D_5	Spot face diameter
L_1	Overall length
L_7	Shank length
L_{10}	Spot face to shoulder length
L_{11}	Total head length
L_{12}	Seal angle length
L_{13}	Minor diameter length
P_1	Rear pipe tap

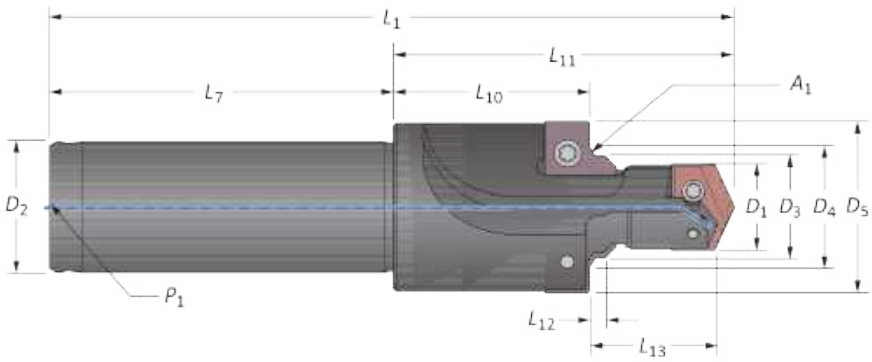

SAE J-1926 / ISO 11926-1 / MS-16142

Imperial Shank Holders

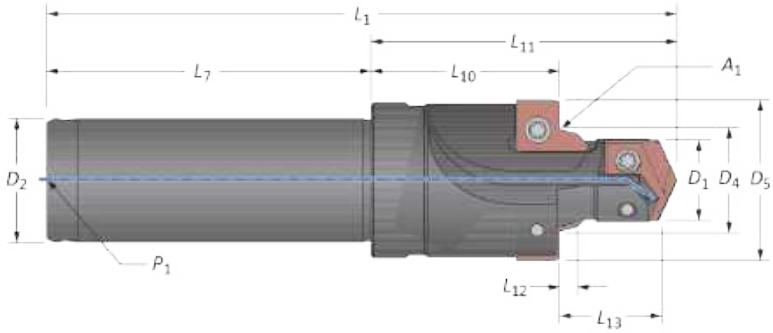

	Tube Dash No.	Cutting			Seal Angle			Holder			Shank			Port Thread Size	Part No.
		D_1	L_{13}*	D_5	A_1	D_4	L_{12}	L_{11}	L_{10}	L_1	L_7	D_2	P_1		
	-4	0.386	0.551	0.840	12°	0.490	0.106	1.527	0.896	3.402	1.875	0.625	1/16 NPT	7/16-20 UNF-2B	**J1926-04Y-063F**
	-5	0.453	0.551	0.926	12°	0.553	0.106	1.527	0.885	3.402	1.875	0.625	1/16 NPT	1/2-20 UNF-2B	**J1926-05Z-063F**
	-6	0.512	0.610	0.989	12°	0.618	0.106	1.857	1.144	3.826	1.969	0.750	1/8 NPT	9/16-18 UNF-2B	**J1926-060-075F**
	-8	0.689	0.689	1.206	15°	0.813	0.106	1.982	1.150	3.951	1.969	0.750	1/8 NPT	3/4-16 UNF-2B	**J1926-080-075F**
	-10	0.807	0.787	1.344	15°	0.945	0.106	2.140	1.185	4.421	2.281	1.000	1/8 NPT	7/8-14 UNF-2B	**J1926-101-100F**
i	-12	0.984	0.906	1.655	15°	1.150	0.138	2.640	1.530	4.921	2.281	1.250	1/4 NPT	1 1/16-12 UN-2B	**J1926-122-125F**
	-14	1.102	0.906	1.781	15°	1.276	0.138	2.640	1.504	4.921	2.281	1.250	1/4 NPT	1 3/16-12 UN-2B	**J1926-142-125F**
	-16	1.231	0.906	1.934	15°	1.400	0.138	2.640	1.477	4.921	2.281	1.250	1/4 NPT	1 5/16-12 UN-2B	**J1926-162-125F**
	-20	1.535	0.906	2.306	15°	1.715	0.138	3.062	1.835	5.750	2.688	1.500	1/4 NPT	1 5/8-12 UN-2B	**J1926-203-150F**
	-24	1.791	0.906	2.564	15°	1.965	0.138	3.062	1.778	5.750	2.688	1.500	1/4 NPT	1 7/8-12 UN-2B	**J1926-243-150F**
	-32	2.421	0.906	3.470	15°	2.589	0.138	3.812	2.393	6.500	2.688	1.500	1/4 NPT	2 1/2-12 UN-2B	**J1926-324-150F**
	-4	9.80	14.00	21.30	12°	12.50	2.70	38.80	22.80	86.40	47.60	15.90	1/16 NPT	7/16-20 UNF-2B	**J1926-04Y-063F**
	-5	11.50	14.00	23.50	12°	14.10	2.70	38.80	22.50	86.40	47.60	15.90	1/16 NPT	1/2-20 UNF-2B	**J1926-05Z-063F**
	-6	13.00	15.50	25.10	12°	15.70	2.70	47.20	29.00	97.20	50.00	19.10	1/8 NPT	9/16-18 UNF-2B	**J1926-060-075F**
	-8	17.50	17.50	30.60	15°	20.70	2.70	50.30	29.20	100.40	50.00	19.10	1/8 NPT	3/4-16 UNF-2B	**J1926-080-075F**
	-10	20.50	20.00	34.10	15°	24.00	2.70	54.40	30.10	112.30	57.90	25.40	1/8 NPT	7/8-14 UNF-2B	**J1926-101-100F**
m	-12	25.00	23.00	42.00	15°	29.20	3.50	67.10	38.90	125.00	57.90	31.80	1/4 NPT	1 1/16-12 UN-2B	**J1926-122-125F**
	-14	28.00	23.00	45.20	15°	32.40	3.50	67.10	38.20	125.00	57.90	31.80	1/4 NPT	1 3/16-12 UN-2B	**J1926-142-125F**
	-16	31.20	23.00	49.10	15°	35.60	3.50	67.10	37.50	125.00	57.90	31.80	1/4 NPT	1 5/16-12 UN-2B	**J1926-162-125F**
	-20	39.00	23.00	58.50	15°	43.60	3.50	77.80	46.60	146.00	68.30	38.10	1/4 NPT	1 5/8-12 UN-2B	**J1926-203-150F**
	-24	45.50	23.00	65.10	15°	49.90	3.50	77.80	45.20	146.00	68.30	38.10	1/4 NPT	1 7/8-12 UN-2B	**J1926-243-150F**
	-32	61.50	23.00	88.10	15°	65.80	3.50	96.80	60.80	165.10	68.30	38.10	1/4 NPT	2 1/2-12 UN-2B	**J1926-324-150F**

*Port contour cutters are available with extended pilot length (**L_{13}**). See pages A92: 10-11 for items.

A92: 30 - 37
Key on A92: 1
A92: 2 - 4
A92: 18 - 19

i = Imperial (in)
m = Metric (mm)

SAE J-1926 / ISO 11926-1 / MS-16142

Inserts

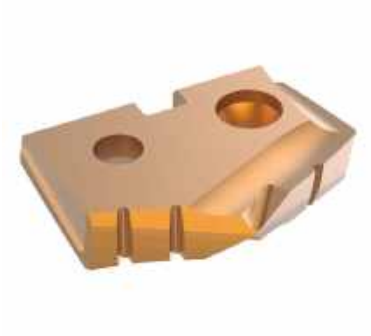

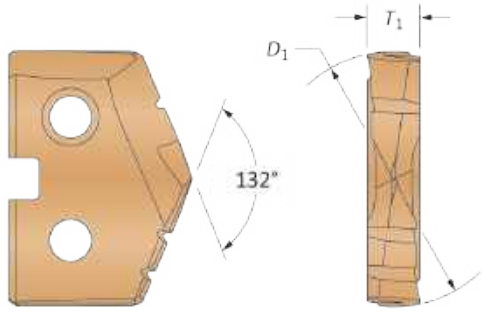

See section A30 for complete T-A insert details.

T-A® / GEN2 T-A® Drill Inserts

Tube Dash No.	AccuPort Part No.	T-A® Insert Series	Part No. Super Cobalt (AM200®)	Part No. Carbide (AM300®)	Insert Screw	Insert Driver	Admissible Tightening Torque*
-4	J1926-04Y-063F	Y	**45YH-.386**	**4C1YP-.386**	724-IP7-1	8IP-7	7.4 in/lbs (84 N-cm)
-5	J1926-05Z-063F	Z	**45ZH-11.5**	**4C1ZP-11.5**	7247-IP7-1	8IP-7	7.4 in/lbs (84 N-cm)
-6	J1926-060-075F	0	**450H-13**	**4C10P-13**	72556-IP8-1	8IP-8	15.5 in/lbs (175 N-cm)
-8	J1926-080-075F	0	**450H-0022**	**4C10P-0022**	72567-IP8-1	8IP-8	15.5 in/lbs (175 N-cm)
-10	J1926-101-100F	1	**451H-20.5**	**4C11P-20.5**	7375-IP9-1	8IP-9	27.0 in/lbs (305 N-cm)
-12	J1926-122-125F	2	**452H-25**	**4C12P-25**	7495-IP15-1	8IP-15	61.0 in/lbs (690 N-cm)
-14	J1926-142-125F	2	**452H-28**	**4C12P-28**	7495-IP15-1	8IP-15	61.0 in/lbs (690 N-cm)
-16	J1926-162-125F	2	**452H-1.231**	**4C12P-1.231**	7495-IP15-1	8IP-15	61.0 in/lbs (690 N-cm)
-20	J1926-203-150F	3	**453H-39**	**1C53A-39**	7514-IP20-1	8IP-20	121.3 in/lbs (1370 N-cm)
-24	J1926-243-150F	3	**453H-45.5**	**1C53A-45.5**	7514-IP20-1	8IP-20	121.3 in/lbs (1370 N-cm)
-32	J1926-324-150F	4	**454H-61.5**	**–**	7514-IP20-1	8IP-20	121.3 in/lbs (1370 N-cm)

*Tightening torques are calculated with a friction coefficient of μ = 0.14 and develop 90% of ultimate yield strength.

Port Form Drill Inserts

Tube Dash No.	AccuPort Part No.	Part No. C3 Carbide (AM200®)	Part No. C5 Carbide (TiAlN)	Insert Screw	Insert Driver	Admissible Tightening Torque*
-4	J1926-04Y-063F	**J1926-02-C3H**	**J1926-02-C5A**	72556-IP8-1	8IP-8	15.5 in/lbs (175 N-cm)
-5	J1926-05Z-063F	**J1926-03-C3H**	**J1926-03-C5A**	72556-IP8-1	8IP-8	15.5 in/lbs (175 N-cm)
-6	J1926-060-075F	**J1926-03-C3H**	**J1926-03-C5A**	72556-IP8-1	8IP-8	15.5 in/lbs (175 N-cm)
-8	J1926-080-075F	**J1926-07-C3H**	**J1926-07-C5A**	72556-IP8-1	8IP-8	15.5 in/lbs (175 N-cm)
-10	J1926-101-100F	**J1926-04-C3H**	**J1926-04-C5A**	72556-IP8-1	8IP-8	15.5 in/lbs (175 N-cm)
-12	J1926-122-125F	**J1926-08-C3H**	**J1926-08-C5A**	7375-IP9-1	8IP-9	15.5 in/lbs (175 N-cm)
-14	J1926-142-125F	**J1926-08-C3H**	**J1926-08-C5A**	7375-IP9-1	8IP-9	15.5 in/lbs (175 N-cm)
-16	J1926-162-125F	**J1926-09-C3H**	**J1926-09-C5A**	7375-IP9-1	8IP-9	27.0 in/lbs (305 N-cm)
-20	J1926-203-150F	**J1926-10-C3H**	**J1926-10-C5A**	7375-IP9-1	8IP-9	27.0 in/lbs (305 N-cm)
-24	J1926-243-150F	**J1926-11-C3H**	**J1926-11-C5A**	7375-IP9-1	8IP-9	27.0 in/lbs (305 N-cm)
-32	J1926-324-150F	**J1926-12-C3H**	**J1926-12-C5A**	7375-IP9-1	8IP-9	27.0 in/lbs (305 N-cm)

*Tightening torques are calculated with a friction coefficient of μ = 0.14 and develop 90% of ultimate yield strength.

A92: 30 - 37
A92: 2 - 4
A92: 18 - 19
Key on A92: 1

Y - 2 series T-A inserts sold in multiples of 2.
3 - 4 series T-A inserts sold in multiples of 1.
Port form inserts sold in multiples of 2.
Insert screws sold in multiples of 10.

SAE J-1926 / ISO 11926-1 / MS-16142

Metric Shank Holders

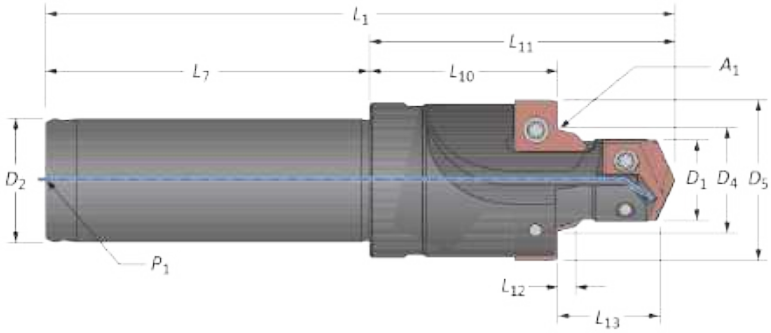

Tube Dash No.	Cutting D_1	Cutting L_{13}	Cutting D_5	Seal Angle A_1	Seal Angle D_4	Seal Angle L_{12}	Holder L_{11}	Holder L_{10}	Holder L_1	Shank L_7	Shank D_2	Shank P_1	Port Thread Size	Part No.
-4	0.386	0.551	0.840	12°	0.490	0.106	1.527	0.896	3.177	1.650	0.630	1/16 BSPT	7/16-20 UNF-2B	**J1926-04Y-16FM**
-5	0.453	0.551	0.926	12°	0.553	0.106	1.527	0.885	3.177	1.650	0.630	1/16 BSPT	1/2-20 UNF-2B	**J1926-05Z-16FM**
-6	0.512	0.610	0.989	12°	0.618	0.106	1.857	1.144	3.508	1.650	0.787	1/8 BSPT	9/16-18 UNF-2B	**J1926-060-20FM**
-8	0.689	0.689	1.206	15°	0.813	0.106	1.982	1.150	3.630	1.650	0.787	1/8 BSPT	3/4-16 UNF-2B	**J1926-080-20FM**
-10	0.807	0.787	1.344	15°	0.945	0.106	2.140	1.185	4.232	2.091	0.984	1/8 BSPT	7/8-14 UNF-2B	**J1926-101-25FM**
-12	0.984	0.906	1.655	15°	1.150	0.138	2.640	1.530	4.921	2.280	1.260	1/4 BSPT	1 1/16-12 UN-2B	**J1926-122-32FM**
-14	1.102	0.906	1.781	15°	1.276	0.138	2.640	1.504	4.921	2.280	1.260	1/4 BSPT	1 3/16-12 UN-2B	**J1926-142-32FM**
-16	1.231	0.906	1.934	15°	1.400	0.138	2.640	1.477	4.921	2.280	1.260	1/4 BSPT	1 5/16-12 UN-2B	**J1926-162-32FM**
-20	1.535	0.906	2.306	15°	1.715	0.138	3.062	1.835	5.642	2.580	1.260	1/4 BSPT	1 5/8-12 UN-2B	**J1926-203-32FM***
-24	1.791	0.906	2.564	15°	1.965	0.138	3.062	1.778	5.642	2.580	1.260	1/4 BSPT	1 7/8-12 UN-2B	**J1926-243-32FM***
-32	2.421	0.906	3.470	15°	2.589	0.138	3.812	2.393	6.390	2.580	1.260	1/4 BSPT	2 1/2-12 UN-2B	**J1926-324-32FM***
-4	9.80	14.00	21.30	12°	12.50	2.70	38.80	22.80	80.70	41.90	16.00	1/16 BSPT	7/16-20 UNF-2B	**J1926-04Y-16FM**
-5	11.50	14.00	23.50	12°	14.10	2.70	38.80	22.50	80.70	41.90	16.00	1/16 BSPT	1/2-20 UNF-2B	**J1926-05Z-16FM**
-6	13.00	15.50	25.10	12°	15.70	2.70	47.20	29.00	89.10	41.90	20.00	1/8 BSPT	9/16-18 UNF-2B	**J1926-060-20FM**
-8	17.50	17.50	30.60	15°	20.70	2.70	50.30	29.20	92.20	41.90	20.00	1/8 BSPT	3/4-16 UNF-2B	**J1926-080-20FM**
-10	20.50	20.00	34.10	15°	24.00	2.70	54.40	30.10	107.50	53.10	25.00	1/8 BSPT	7/8-14 UNF-2B	**J1926-101-25FM**
-12	25.00	23.00	42.00	15°	29.20	3.50	67.10	38.90	125.00	57.90	32.00	1/4 BSPT	1 1/16-12 UN-2B	**J1926-122-32FM**
-14	28.00	23.00	45.20	15°	32.40	3.50	67.10	38.20	125.00	57.90	32.00	1/4 BSPT	1 3/16-12 UN-2B	**J1926-142-32FM**
-16	31.20	23.00	49.10	15°	35.60	3.50	67.10	37.50	125.00	57.90	32.00	1/4 BSPT	1 5/16-12 UN-2B	**J1926-162-32FM**
-20	39.00	23.00	58.50	15°	43.60	3.50	77.80	46.60	143.30	65.50	32.00	1/4 BSPT	1 5/8-12 UN-2B	**J1926-203-32FM***
-24	45.50	23.00	65.10	15°	49.90	3.50	77.80	45.20	143.30	65.50	32.00	1/4 BSPT	1 7/8-12 UN-2B	**J1926-243-32FM***
-32	61.50	23.00	88.10	15°	65.80	3.50	96.80	60.80	162.30	65.50	32.00	1/4 BSPT	2 1/2-12 UN-2B	**J1926-324-32FM***

***NOTICE:** Due to the cutting forces generated by this tool, a mechanical chuck is required. Please contact Application Engineering with any questions.

A92: 30 - 37
Key on A92: 1
A92: 2 - 4
A92: 18 - 21

i = Imperial (in)
m = Metric (mm)

SAE J-1926 / ISO 11926-1 / MS-16142

Inserts

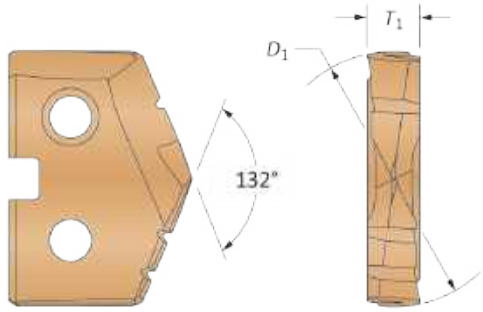

See section A30 for complete T-A insert details.

T-A® / GEN2 T-A® Drill Inserts

Tube Dash No.	AccuPort Part No.	T-A® Insert Series	Part No. Super Cobalt (AM200®)	Part No. Carbide (AM300®)	Insert Screw	Insert Driver	Admissible Tightening Torque**
-4	J1926-04Y-16FM	Y	**45YH-.386**	**4C1YP-.386**	724-IP7-1	8IP-7	7.4 in/lbs (84 N-cm)
-5	J1926-05Z-16FM	Z	**45ZH-11.5**	**4C1ZP-11.5**	7247-IP7-1	8IP-7	7.4 in/lbs (84 N-cm)
-6	J1926-060-20FM	0	**450H-13**	**4C10P-13**	72556-IP8-1	8IP-8	15.5 in/lbs (175 N-cm)
-8	J1926-080-20FM	0	**450H-0022**	**4C10P-0022**	72567-IP8-1	8IP-8	15.5 in/lbs (175 N-cm)
-10	J1926-101-25FM	1	**451H-20.5**	**4C11P-20.5**	7375-IP9-1	8IP-9	27.0 in/lbs (305 N-cm)
-12	J1926-122-32FM	2	**452H-25**	**4C12P-25**	7495-IP15-1	8IP-15	61.0 in/lbs (690 N-cm)
-14	J1926-142-32FM	2	**452H-28**	**4C12P-28**	7495-IP15-1	8IP-15	61.0 in/lbs (690 N-cm)
-16	J1926-162-32FM	2	**452H-1.231**	**4C12P-1.231**	7495-IP15-1	8IP-15	61.0 in/lbs (690 N-cm)
-20	J1926-203-32FM*	3	**453H-39**	**1C53A-39**	7514-IP20-1	8IP-20	121.3 in/lbs (1370 N-cm)
-24	J1926-243-32FM*	3	**453H-45.5**	**1C53A-45.5**	7514-IP20-1	8IP-20	121.3 in/lbs (1370 N-cm)
-32	J1926-324-32FM*	4	**454H-61.5**	**–**	7514-IP20-1	8IP-20	121.3 in/lbs (1370 N-cm)

***NOTICE:** Due to the cutting forces generated by this tool, a mechanical chuck is required. Please contact Application Engineering with any questions.
**Tightening torques are calculated with a friction coefficient of μ = 0.14 and develop 90% of ultimate yield strength.

Port Form Drill Inserts

Tube Dash No.	AccuPort Part No.	Part No. C3 Carbide (AM200®)	Part No. C5 Carbide (TiAlN)	Insert Screw	Insert Driver	Admissible Tightening Torque**
-4	J1926-04Y-16FM	**J1926-02-C3H**	**J1926-02-C5A**	72556-IP8-1	8IP-8	15.5 in/lbs (175 N-cm)
-5	J1926-05Z-16FM	**J1926-03-C3H**	**J1926-03-C5A**	72556-IP8-1	8IP-8	15.5 in/lbs (175 N-cm)
-6	J1926-060-20FM	**J1926-03-C3H**	**J1926-03-C5A**	72556-IP8-1	8IP-8	15.5 in/lbs (175 N-cm)
-8	J1926-080-20FM	**J1926-07-C3H**	**J1926-07-C5A**	72556-IP8-1	8IP-8	15.5 in/lbs (175 N-cm)
-10	J1926-101-25FM	**J1926-04-C3H**	**J1926-04-C5A**	72556-IP8-1	8IP-8	15.5 in/lbs (175 N-cm)
-12	J1926-122-32FM	**J1926-08-C3H**	**J1926-08-C5A**	7375-IP9-1	8IP-9	15.5 in/lbs (175 N-cm)
-14	J1926-142-32FM	**J1926-08-C3H**	**J1926-08-C5A**	7375-IP9-1	8IP-9	15.5 in/lbs (175 N-cm)
-16	J1926-162-32FM	**J1926-09-C3H**	**J1926-09-C5A**	7375-IP9-1	8IP-9	27.0 in/lbs (305 N-cm)
-20	J1926-203-32FM*	**J1926-10-C3H**	**J1926-10-C5A**	7375-IP9-1	8IP-9	27.0 in/lbs (305 N-cm)
-24	J1926-243-32FM*	**J1926-11-C3H**	**J1926-11-C5A**	7375-IP9-1	8IP-9	27.0 in/lbs (305 N-cm)
-32	J1926-324-32FM*	**J1926-12-C3H**	**J1926-12-C5A**	7375-IP9-1	8IP-9	27.0 in/lbs (305 N-cm)

***NOTICE:** Due to the cutting forces generated by this tool, a mechanical chuck is required. Please contact Application Engineering with any questions.
**Tightening torques are calculated with a friction coefficient of μ = 0.14 and develop 90% of ultimate yield strength.

A92: 30 - 37
Key on A92: 1
A92: 2 - 4
A92: 18 - 21

Y - 2 series T-A inserts sold in multiples of 2.
3 - 4 series T-A inserts sold in multiples of 1.
Port form inserts sold in multiples of 2.
Insert screws sold in multiples of 10.

SAE J-1926 / ISO 11926-1 / MS-16142

Imperial Shank Holders | Extended Minor Diameter Lengths (L_{13})

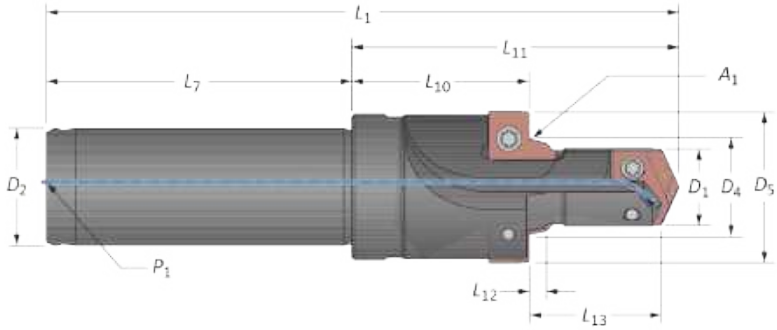

	Tube Dash No.	Cutting			Seal Angle			Holder			Shank			Port Thread Size	Part No.
		D_1	L_{13}	D_5	A_1	D_4	L_{12}	L_{11}	L_{10}	L_1	L_7	D_2	P_1		
	-4	0.386	0.801	0.840	12°	0.490	0.106	1.777	0.896	3.650	1.875	0.625	1/16 NPT	7/16-20 UNF-2B	**X1926-04Y-063F**
	-5	0.453	0.801	0.926	12°	0.553	0.106	1.777	0.885	3.650	1.875	0.625	1/16 NPT	1/2-20 UNF-2B	**X1926-05Z-063F**
	-6	0.512	0.860	0.989	12°	0.618	0.106	2.107	1.144	4.075	1.969	0.750	1/8 NPT	9/16-18 UNF-2B	**X1926-060-075F**
	-8	0.689	0.939	1.206	15°	0.813	0.106	2.232	1.150	4.201	1.969	0.750	1/8 NPT	3/4-16 UNF-2B	**X1926-080-075F**
	-10	0.807	1.037	1.344	15°	0.945	0.106	2.390	1.185	4.669	2.281	1.000	1/8 NPT	7/8-14 UNF-2B	**X1926-101-100F**
i	-12	0.984	1.156	1.655	15°	1.150	0.138	2.890	1.530	5.169	2.281	1.250	1/4 NPT	1 1/16-12 UN-2B	**X1926-122-125F**
	-14	1.102	1.156	1.781	15°	1.276	0.138	2.890	1.504	5.169	2.281	1.250	1/4 NPT	1 3/16-12 UN-2B	**X1926-142-125F**
	-16	1.231	1.156	1.934	15°	1.400	0.138	2.890	1.477	5.169	2.281	1.250	1/4 NPT	1 5/16-12 UN-2B	**X1926-162-125F**
	-20	1.535	1.156	2.306	15°	1.715	0.138	3.312	1.835	6.000	2.688	1.500	1/4 NPT	1 5/8-12 UN-2B	**X1926-203-150F**
	-24	1.791	1.156	2.564	15°	1.965	0.138	3.312	1.778	6.000	2.688	1.500	1/4 NPT	1 7/8-12 UN-2B	**X1926-243-150F**
	-32	2.421	1.156	3.470	15°	2.589	0.138	4.062	2.393	6.752	2.688	1.500	1/4 NPT	2 1/2-12 UN-2B	**X1926-324-150F**
	-4	9.80	20.30	21.30	12°	12.50	2.70	45.10	22.80	92.70	47.60	15.90	1/16 NPT	7/16-20 UNF-2B	**X1926-04Y-063F**
	-5	11.50	20.30	23.50	12°	14.10	2.70	45.10	22.50	92.70	47.60	15.90	1/16 NPT	1/2-20 UNF-2B	**X1926-05Z-063F**
	-6	13.00	21.80	25.10	12°	15.70	2.70	53.50	29.00	103.50	50.00	19.10	1/8 NPT	9/16-18 UNF-2B	**X1926-060-075F**
	-8	17.50	23.80	30.60	15°	20.70	2.70	56.70	29.20	106.70	50.00	19.10	1/8 NPT	3/4-16 UNF-2B	**X1926-080-075F**
	-10	20.50	26.30	34.10	15°	24.00	2.70	60.70	30.10	118.60	57.90	25.40	1/8 NPT	7/8-14 UNF-2B	**X1926-101-100F**
m	-12	25.00	29.30	42.00	15°	29.20	3.50	73.40	38.90	131.30	57.90	31.80	1/4 NPT	1 1/16-12 UN-2B	**X1926-122-125F**
	-14	28.00	29.30	45.20	15°	32.40	3.50	73.40	38.20	131.30	57.90	31.80	1/4 NPT	1 3/16-12 UN-2B	**X1926-142-125F**
	-16	31.20	29.30	49.10	15°	35.60	3.50	73.40	37.50	131.30	57.90	31.80	1/4 NPT	1 5/16-12 UN-2B	**X1926-162-125F**
	-20	39.00	29.30	58.50	15°	43.60	3.50	84.10	46.60	152.40	68.30	38.10	1/4 NPT	1 5/8-12 UN-2B	**X1926-203-150F**
	-24	45.50	29.30	65.10	15°	49.90	3.50	84.10	45.20	152.40	68.30	38.10	1/4 NPT	1 7/8-12 UN-2B	**X1926-243-150F**
	-32	61.50	29.30	88.10	15°	65.80	3.50	103.20	60.80	171.50	68.30	38.10	1/4 NPT	2 1/2-12 UN-2B	**X1926-324-150F**

A92: 30 - 37
Key on A92: 1
A92: 2 - 4
A92: 18 - 21

i = Imperial (in)
m = Metric (mm)

SAE J-1926 / ISO 11926-1 / MS-16142

Inserts

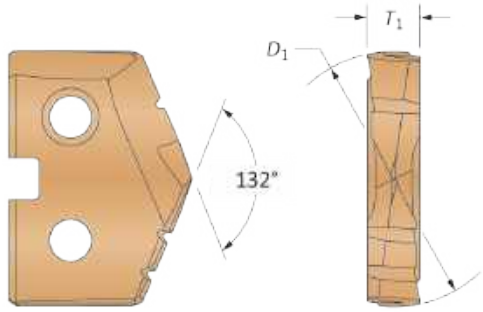

See section A30 for complete T-A insert details.

T-A® / GEN2 T-A® Drill Inserts

Tube Dash No.	AccuPort Part No.	T-A® Insert Series	Part No. Super Cobalt (AM200®)	Part No. Carbide (AM300®)	Insert Screw	Insert Driver	Admissible Tightening Torque*
-4	X1926-04Y-063F	Y	**45YH-.386**	**4C1YP-.386**	724-IP7-1	8IP-7	7.4 in/lbs (84 N-cm)
-5	X1926-05Z-063F	Z	**45ZH-11.5**	**4C1ZP-11.5**	7247-IP7-1	8IP-7	7.4 in/lbs (84 N-cm)
-6	X1926-060-075F	0	**450H-13**	**4C10P-13**	72556-IP8-1	8IP-8	15.5 in/lbs (175 N-cm)
-8	X1926-080-075F	0	**450H-0022**	**4C10P-0022**	72567-IP8-1	8IP-8	15.5 in/lbs (175 N-cm)
-10	X1926-101-100F	1	**451H-20.5**	**4C11P-20.5**	7375-IP9-1	8IP-9	27.0 in/lbs (305 N-cm)
-12	X1926-122-125F	2	**452H-25**	**4C12P-25**	7495-IP15-1	8IP-15	61.0 in/lbs (690 N-cm)
-14	X1926-142-125F	2	**452H-28**	**4C12P-28**	7495-IP15-1	8IP-15	61.0 in/lbs (690 N-cm)
-16	X1926-162-125F	2	**452H-1.231**	**4C12P-1.231**	7495-IP15-1	8IP-15	61.0 in/lbs (690 N-cm)
-20	X1926-203-150F	3	**453H-39**	**1C53A-39**	7514-IP20-1	8IP-20	121.3 in/lbs (1370 N-cm)
-24	X1926-243-150F	3	**453H-45.5**	**1C53A-45.5**	7514-IP20-1	8IP-20	121.3 in/lbs (1370 N-cm)
-32	X1926-324-150F	4	**454H-61.5**	**–**	7514-IP20-1	8IP-20	121.3 in/lbs (1370 N-cm)

*Tightening torques are calculated with a friction coefficient of μ = 0.14 and develop 90% of ultimate yield strength.

Port Form Drill Inserts

Tube Dash No.	AccuPort Part No.	Part No. C3 Carbide (AM200®)	Part No. C5 Carbide (TiAlN)	Insert Screw	Insert Driver	Admissible Tightening Torque*
-4	X1926-04Y-063F	**J1926-02-C3H**	**J1926-02-C5A**	72556-IP8-1	8IP-8	15.5 in/lbs (175 N-cm)
-5	X1926-05Z-063F	**J1926-03-C3H**	**J1926-03-C5A**	72556-IP8-1	8IP-8	15.5 in/lbs (175 N-cm)
-6	X1926-060-075F	**J1926-03-C3H**	**J1926-03-C5A**	72556-IP8-1	8IP-8	15.5 in/lbs (175 N-cm)
-8	X1926-080-075F	**J1926-07-C3H**	**J1926-07-C5A**	72556-IP8-1	8IP-8	15.5 in/lbs (175 N-cm)
-10	X1926-101-100F	**J1926-04-C3H**	**J1926-04-C5A**	72556-IP8-1	8IP-8	15.5 in/lbs (175 N-cm)
-12	X1926-122-125F	**J1926-08-C3H**	**J1926-08-C5A**	7375-IP9-1	8IP-9	15.5 in/lbs (175 N-cm)
-14	X1926-142-125F	**J1926-08-C3H**	**J1926-08-C5A**	7375-IP9-1	8IP-9	15.5 in/lbs (175 N-cm)
-16	X1926-162-125F	**J1926-09-C3H**	**J1926-09-C5A**	7375-IP9-1	8IP-9	27.0 in/lbs (305 N-cm)
-20	X1926-203-150F	**J1926-10-C3H**	**J1926-10-C5A**	7375-IP9-1	8IP-9	27.0 in/lbs (305 N-cm)
-24	X1926-243-150F	**J1926-11-C3H**	**J1926-11-C5A**	7375-IP9-1	8IP-9	27.0 in/lbs (305 N-cm)
-32	X1926-324-150F	**J1926-12-C3H**	**J1926-12-C5A**	7375-IP9-1	8IP-9	27.0 in/lbs (305 N-cm)

*Tightening torques are calculated with a friction coefficient of μ = 0.14 and develop 90% of ultimate yield strength.

A92: 30 - 37
A92: 2 - 4
A92: 18 - 21
Key on A92: 1

Y - 2 series T-A inserts sold in multiples of 2.
3 - 4 series T-A inserts sold in multiples of 1.
Port form inserts sold in multiples of 2.
Insert screws sold in multiples of 10.

ISO 6149-1:2006 / SAE J-2244/1

Metric Shank Holders

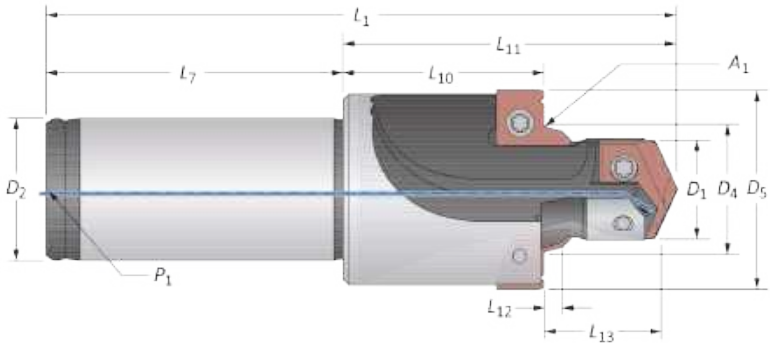

	Tube Dash No.	Cutting D_1	Cutting L_{13}	Cutting D_5	Seal Angle A_1	Seal Angle D_4	Seal Angle L_{12}	Holder L_{11}	Holder L_{10}	Holder L_1	Shank L_7	Shank D_2	Shank P_1	Port Thread Size	Part No.
	-4	0.413	0.556	0.945	15°	0.544	0.102	1.527	0.876	3.177	1.650	0.630	1/16 BSPT	M12 X 1.5	**I6149-04RY-16FM**
	-5	0.492	0.556	1.024	15°	0.623	0.102	1.527	0.858	3.177	1.650	0.630	1/16 BSPT	M14 X 1.5	**I6149-05RZ-16FM**
	-6	0.571	0.615	1.102	15°	0.702	0.102	1.857	1.116	3.508	1.650	0.787	1/8 BSPT	M16 X 1.5	**I6149-06R0-20FM**
	-8	0.650	0.674	1.181	15°	0.781	0.102	1.982	1.164	3.630	1.650	0.787	1/8 BSPT	M18 X 1.5	**I6149-08R0-20FM**
	-10	0.807	0.717	1.339	15°	0.938	0.102	2.140	1.246	4.232	2.091	0.984	1/8 BSPT	M22 X 1.5	**I6149-10R1-25FM**
i	-12	0.984	0.874	1.575	15°	1.159	0.130	2.640	1.552	4.921	2.280	1.260	1/4 BSPT	M27 X 2	**I6149-12R2-32FM**
	-14	1.102	0.874	1.733	15°	1.277	0.130	2.640	1.526	4.921	2.280	1.260	1/4 BSPT	M30 X 2	**I6149-14R2-32FM**
	-16	1.220	0.874	1.929	15°	1.395	0.130	2.640	1.499	4.921	2.280	1.260	1/4 BSPT	M33 X 2	**I6149-16R2-32FM**
	-20	1.575	0.895	2.362	15°	1.749	0.130	3.062	1.828	5.343	2.280	1.260	1/4 BSPT	M42 X 2	**I6149-20R3-32FM***
	-24	1.811	0.993	2.602	15°	1.985	0.130	3.062	1.676	5.343	2.280	1.260	1/4 BSPT	M48 X 2	**I6149-24R3-32FM***
	-32	2.283	1.092	2.992	15°	2.458	0.130	3.812	2.228	6.091	2.280	1.260	1/4 BSPT	M60 X 2	**I6149-32R4-32FM***
	-4	10.50	14.10	24.00	15°	13.81	2.60	38.80	22.20	80.70	41.90	16.00	1/16 BSPT	M12 X 1.5	**I6149-04RY-16FM**
	-5	12.50	14.10	26.00	15°	15.80	2.60	38.80	21.80	80.70	41.90	16.00	1/16 BSPT	M14 X 1.5	**I6149-05RZ-16FM**
	-6	14.50	15.60	28.00	15°	17.80	2.60	47.20	28.30	89.10	41.90	20.00	1/8 BSPT	M16 X 1.5	**I6149-06R0-20FM**
	-8	16.50	17.10	30.00	15°	19.80	2.60	50.30	29.60	92.20	41.90	20.00	1/8 BSPT	M18 X 1.5	**I6149-08R0-20FM**
	-10	20.50	18.20	34.00	15°	23.80	2.60	54.40	31.60	107.50	53.10	25.00	1/8 BSPT	M22 X 1.5	**I6149-10R1-25FM**
m	-12	25.00	22.20	40.00	15°	29.40	3.30	67.10	39.40	125.00	57.90	32.00	1/4 BSPT	M27 X 2	**I6149-12R2-32FM**
	-14	28.00	22.20	44.00	15°	32.40	3.30	67.10	38.80	125.00	57.90	32.00	1/4 BSPT	M30 X 2	**I6149-14R2-32FM**
	-16	31.00	22.20	49.00	15°	35.40	3.30	67.10	38.10	125.00	57.90	32.00	1/4 BSPT	M33 X 2	**I6149-16R2-32FM**
	-20	40.00	22.70	60.00	15°	44.40	3.30	77.80	46.40	135.70	57.90	32.00	1/4 BSPT	M42 X 2	**I6149-20R3-32FM***
	-24	46.00	25.20	66.10	15°	50.40	3.30	77.80	42.60	135.70	57.90	32.00	1/4 BSPT	M48 X 2	**I6149-24R3-32FM***
	-32	58.00	27.70	76.00	15°	62.40	3.30	96.80	56.60	154.70	57.90	32.00	1/4 BSPT	M60 X 2	**I6149-32R4-32FM***

***NOTICE:** Due to the cutting forces generated by this tool, a mechanical chuck is required. Please contact Application Engineering with any questions.

A92: 30 - 37
A92: 2 - 4
A92: 22 - 25
Key on A92: 1

i = Imperial (in)
m = Metric (mm)

ISO 6149-1:2006 / SAE J-2244/1

Inserts

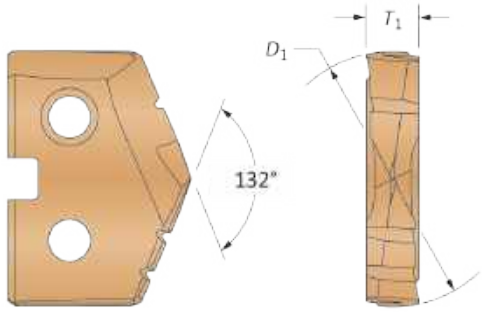

See section A30 for complete T-A insert details.

T-A® / GEN2 T-A® Drill Inserts

Tube Dash No.	AccuPort Part No.	T-A® Insert Series	Part No. Super Cobalt (AM200®)	Part No. Carbide (AM300®)	Insert Screw	Insert Driver	Admissible Tightening Torque**
-4	I6149-04RY-16FM	Y	**45YH-10.5**	**4C1YP-10.5**	724-IP7-1	8IP-7	7.4 in/lbs (84 N-cm)
-5	I6149-05RZ-16FM	Z	**45ZH-12.5**	**4C1ZP-12.5**	7247-IP7-1	8IP-7	7.4 in/lbs (84 N-cm)
-6	I6149-06R0-20FM	0	**450H-14.5**	**4C10P-14.5**	72556-IP8-1	8IP-8	15.5 in/lbs (175 N-cm)
-8	I6149-08R0-20FM	0	**450H-16.5**	**4C10P-16.5**	72567-IP8-1	8IP-8	15.5 in/lbs (175 N-cm)
-10	I6149-10R1-25FM	1	**451H-20.5**	**4C11P-20.5**	7375-IP9-1	8IP-9	27.0 in/lbs (305 N-cm)
-12	I6149-12R2-32FM	2	**452H-25**	**4C12P-25**	7495-IP15-1	8IP-15	61.0 in/lbs (690 N-cm)
-14	I6149-14R2-32FM	2	**452H-28**	**4C12P-28**	7495-IP15-1	8IP-15	61.0 in/lbs (690 N-cm)
-16	I6149-16R2-32FM	2	**452H-31**	**4C12P-31**	7495-IP15-1	8IP-15	61.0 in/lbs (690 N-cm)
-20	I6149-20R3-32FM*	3	**453H-40**	**1C53A-40**	7514-IP20-1	8IP-20	121.3 in/lbs (1370 N-cm)
-24	I6149-24R3-32FM*	3	**453H-46**	**1C53A-46**	7514-IP20-1	8IP-20	121.3 in/lbs (1370 N-cm)
-32	I6149-32R4-32FM*	4	**454H-58**	–	7514-IP20-1	8IP-20	121.3 in/lbs (1370 N-cm)

***NOTICE:** Due to the cutting forces generated by this tool, a mechanical chuck is required. Please contact Application Engineering with any questions.
**Tightening torques are calculated with a friction coefficient of μ = 0.14 and develop 90% of ultimate yield strength.

Port Form Drill Inserts

Tube Dash No.	AccuPort Part No.	Part No. - C3 Carbide (AM200®) ID Ridge	Part No. - C3 Carbide (AM200®) No ID Ridge	Part No. - C5 Carbide (TiAlN) ID Ridge	Part No. - C5 Carbide (TiAlN) No ID Ridge	Insert Screw	Insert Driver	Admissible Tightening Torque**
-4	I6149-04RY-16FM	**I6149-04R-C3H**	**I6149-04-C3H**	**I6149-04R-C5A**	**I6149-04-C5A**	72556-IP8-1	8IP-8	15.5 in/lbs (175 N-cm)
-5	I6149-05RZ-16FM	**I6149-04R-C3H**	**I6149-04-C3H**	**I6149-04R-C5A**	**I6149-04-C5A**	72556-IP8-1	8IP-8	15.5 in/lbs (175 N-cm)
-6	I6149-06R0-20FM	**I6149-06R-C3H**	**I6149-06-C3H**	**I6149-06R-C5A**	**I6149-06-C5A**	72556-IP8-1	8IP-8	15.5 in/lbs (175 N-cm)
-8	I6149-08R0-20FM	**I6149-06R-C3H**	**I6149-06-C3H**	**I6149-06R-C5A**	**I6149-06-C5A**	72556-IP8-1	8IP-8	15.5 in/lbs (175 N-cm)
-10	I6149-10R1-25FM	**I6149-04R-C3H**	**I6149-04-C3H**	**I6149-04R-C5A**	**I6149-04-C5A**	72556-IP8-1	8IP-8	15.5 in/lbs (175 N-cm)
-12	I6149-12R2-32FM	**I6149-12R-C3H**	**I6149-12-C3H**	**I6149-12R-C5A**	**I6149-12-C5A**	72556-IP8-1	8IP-8	15.5 in/lbs (175 N-cm)
-14	I6149-14R2-32FM	**I6149-14R-C3H**	**I6149-14-C3H**	**I6149-14R-C5A**	**I6149-14-C5A**	72556-IP8-1	8IP-8	15.5 in/lbs (175 N-cm)
-16	I6149-16R2-32FM	**I6149-16R-C3H**	**I6149-16-C3H**	**I6149-16R-C5A**	**I6149-16-C5A**	7375-IP9-1	8IP-9	27.0 in/lbs (305 N-cm)
-20	I6149-20R3-32FM*	**I6149-20R-C3H**	**I6149-20-C3H**	**I6149-20R-C5A**	**I6149-20-C5A**	7375-IP9-1	8IP-9	27.0 in/lbs (305 N-cm)
-24	I6149-24R3-32FM*	**I6149-24R-C3H**	**I6149-24-C3H**	**I6149-24R-C5A**	**I6149-24-C5A**	7375-IP9-1	8IP-9	27.0 in/lbs (305 N-cm)
-32	I6149-32R4-32FM*	**I6149-32R-C3H**	**I6149-32-C3H**	**I6149-32R-C5A**	**I6149-32-C5A**	7375-IP9-1	8IP-9	27.0 in/lbs (305 N-cm)

***NOTICE:** Due to the cutting forces generated by this tool, a mechanical chuck is required. Please contact Application Engineering with any questions.
**Tightening torques are calculated with a friction coefficient of μ = 0.14 and develop 90% of ultimate yield strength.

A92: 30 - 37
A92: 2 - 4
A92: 22 - 25
Key on A92: 1

Y - 2 series T-A inserts sold in multiples of 2.
3 - 4 series T-A inserts sold in multiples of 1.
Port form inserts sold in multiples of 2.
Insert screws sold in multiples of 10.

SAE AS5202 / AND10050

Imperial Shank Holders

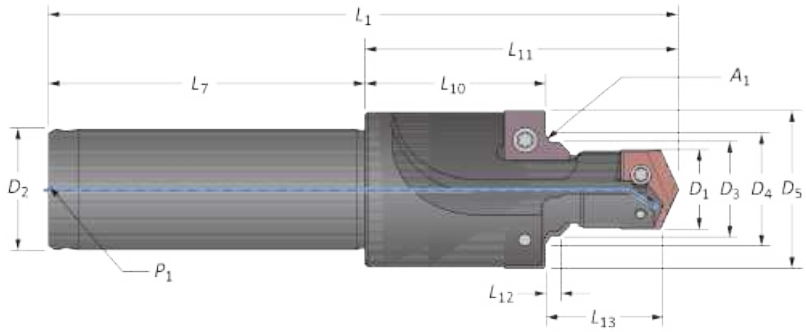

	Tube Dash No.	Cutting D_1	Cutting D_1*	Cutting L_{13}	Cutting D_5	Seal Angle A_1	Seal Angle D_4	Seal Angle L_{12}	Holder D_3	Holder L_{11}	Holder L_{10}	Holder L_1	Shank L_7	Shank D_2	Shank P_1	Port Thread Size	Port Thread Size*	Part No.
	-4	0.390	0.386	0.661	0.875	60°	0.565	0.083	0.456	1.647	0.896	3.522	1.875	0.625	1/16 NPT	7/16-20 UNJF-3B	7/16-20 UNF-3B	**AS5202-04Y-063F**
	-5	0.453	0.451	0.661	0.916	60°	0.628	0.083	0.519	1.647	0.882	3.522	1.875	0.625	1/16 NPT	1/2-20 UNJF-3B	1/2-20 UNF-3B	**AS5202-05Z-063F**
	-6	0.510	0.506	0.714	0.979	60°	0.691	0.091	0.582	1.950	1.119	3.919	1.969	0.750	1/8 NPT	9/16-18 UNJF-3B	9/16-18 UNF-3B	**AS5202-06Z-075F**
	-8	0.689	0.688	0.839	1.198	60°	0.878	0.102	0.771	2.117	1.125	4.086	1.969	0.750	1/8 NPT	3/4-16 UNJF-3B	3/4-16 UNF-3B	**AS5202-080-075F**
	-10	0.807	0.801	0.937	1.354	60°	1.003	0.115	0.898	2.303	1.189	4.584	2.281	1.000	1/8 NPT	7/8-14 UNJF-3B	7/8-14 UNF-3B	**AS5202-101-100F**
i	-12	0.984	0.976	1.071	1.635	60°	1.241	0.133	1.088	2.779	1.494	5.060	2.281	1.250	1/4 NPT	1 1/16-12 UNJ-3B	1 1/16-12 UN-3B	**AS5202-122-125F**
	-14	1.109	1.102	1.071	1.775	60°	1.365	0.133	1.212	2.778	1.465	5.059	2.281	1.250	1/4 NPT	1 3/16-12 UNJ-3B	1 3/16-12 UN-3B	**AS5202-142-125F**
	-16	1.234	1.226	1.071	1.920	60°	1.490	0.133	1.337	2.778	1.437	5.059	2.281	1.250	1/4 NPT	1 5/16-12 UNJ-3B	1 5/16-12 UN-3B	**AS5202-162-125F**
	-20	1.547	1.535	1.124	2.280	60°	1.803	0.133	1.650	3.202	1.745	5.890	2.688	1.500	1/4 NPT	1 5/8-12 UNJ-3B	1 5/8-12 UN-3B	**AS5202-203-150F**
	-24	1.797	1.791	1.135	2.570	60°	2.053	0.133	1.900	3.200	1.676	5.888	2.688	1.500	1/4 NPT	1 7/8-12 UNJ-3B	1 7/8-12 UN-3B	**AS5202-243-150F**
	-32	2.421	2.413	1.376	3.490	60°	2.679	0.133	2.526	3.701	1.802	6.389	2.688	1.500	1/4 NPT	2 1/2-12 UNJ-3B	2 1/2-12 UN-3B	**AS5202-324-150F**
	-4	9.91	9.80	16.79	22.23	60°	14.34	2.11	11.57	41.83	22.76	89.46	47.63	15.87	1/16 NPT	7/16-20 UNJF-3B	7/16-20 UNF-3B	**AS5202-04Y-063F**
	-5	11.50	11.46	16.79	23.27	60°	15.94	2.11	13.17	41.83	22.40	89.46	47.63	15.87	1/16 NPT	1/2-20 UNJF-3B	1/2-20 UNF-3B	**AS5202-05Z-063F**
	-6	12.95	12.85	18.14	24.87	60°	17.56	2.31	14.78	49.53	28.42	99.54	50.01	19.05	1/8 NPT	9/16-18 UNJF-3B	9/16-18 UNF-3B	**AS5202-06Z-075F**
	-8	17.50	17.48	21.31	30.43	60°	22.29	2.59	19.57	53.77	28.58	103.78	50.01	19.05	1/8 NPT	3/4-16 UNJF-3B	3/4-16 UNF-3B	**AS5202-080-075F**
	-10	20.50	20.35	23.80	34.39	60°	25.48	2.92	22.80	58.50	30.20	116.43	57.94	25.40	1/8 NPT	7/8-14 UNJF-3B	7/8-14 UNF-3B	**AS5202-101-100F**
m	-12	25.00	24.79	27.20	41.53	60°	31.51	3.38	27.63	70.59	37.95	128.52	57.94	31.74	1/4 NPT	1 1/16-12 UNJ-3B	1 1/16-12 UN-3B	**AS5202-122-125F**
	-14	28.17	27.99	27.20	45.09	60°	34.68	3.38	30.79	70.56	37.21	128.50	57.94	31.74	1/4 NPT	1 3/16-12 UNJ-3B	1 3/16-12 UN-3B	**AS5202-142-125F**
	-16	31.34	31.14	27.20	48.77	60°	37.85	3.38	33.96	70.56	36.50	128.50	57.94	31.74	1/4 NPT	1 5/16-12 UNJ-3B	1 5/16-12 UN-3B	**AS5202-162-125F**
	-20	39.29	38.99	28.54	57.91	60°	45.79	3.38	41.91	81.33	44.32	149.61	68.28	38.09	1/4 NPT	1 5/8-12 UNJ-3B	1 5/8-12 UN-3B	**AS5202-203-150F**
	-24	45.64	45.49	28.82	65.28	60°	52.13	3.38	48.25	81.28	42.57	149.56	68.28	38.09	1/4 NPT	1 7/8-12 UNJ-3B	1 7/8-12 UN-3B	**AS5202-243-150F**
	-32	61.49	61.29	34.95	88.65	60°	68.03	3.38	64.15	94.01	45.77	162.28	68.28	38.09	1/4 NPT	2 1/2-12 UNJ-3B	2 1/2-12 UN-3B	**AS5202-324-150F**

*Values above represent assembled dimensions. Resulting machined dimensions conforming to SAE AS5202 or AND10050 specfications.
*AND10050 specifications are shown in red.

A92: 30 - 37
Key on A92: 1
A92: 2 - 4
A92: 26 - 27

i = Imperial (in)
m = Metric (mm)

SAE AS5202 / AND10050

Inserts

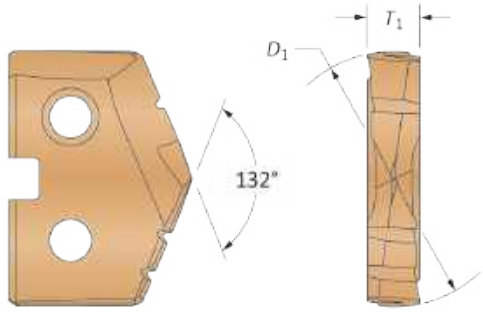

See section A30 for complete T-A insert details.

T-A® / GEN2 T-A® Drill Inserts

Tube Dash No.	AccuPort Part No.	T-A® Insert Series	Part No. Super Cobalt (AM200®)		Part No. Carbide (AM300®)		Insert Screw	Insert Driver	Admissible Tightening Torque*
-4	AS5202-04Y-063F	Y	**45YH-.390**	**45YH-.386**	**4C1YP-.390**	**4C1YP-.386**	724-IP7-1	8IP-7	7.4 in/lbs (84 N-cm)
-5	AS5202-05Z-063F	Z	**45ZH-11.5**	**45ZH-.451**	**4C1ZP-11.5**	**4C1ZP-.451**	7247-IP7-1	8IP-7	7.4 in/lbs (84 N-cm)
-6	AS5202-06Z-075F	Z	**45ZH-.510**	**45ZH-.506**	**4C1ZP-.510**	**4C1ZP-.506**	7247-IP7-1	8IP-7	7.4 in/lbs (84 N-cm)
-8	AS5202-080-075F	0	**450H-17.5**	**450H-0022**	**4C10P-17.5**	**4C10P-0022**	72567-IP8-1	8IP-8	15.5 in/lbs (175 N-cm)
-10	AS5202-101-100F	1	**451H-20.5**	**451H-.801**	**4C11P-20.5**	**4C11P-.801**	7375-IP9-1	8IP-9	27.0 in/lbs (305 N-cm)
-12	AS5202-122-125F	2	**452H-25**	**452H-.976**	**4C12P-25**	**4C12P-.976**	7495-IP15-1	8IP-15	61.0 in/lbs (690 N-cm)
-14	AS5202-142-125F	2	**452H-1.109**	**452H-28**	**4C12P-1.109**	**4C12P-28**	7495-IP15-1	8IP-15	61.0 in/lbs (690 N-cm)
-16	AS5202-162-125F	2	**452H-1.234**	**452H-1.226**	**4C12P-1.234**	**4C12P-1.226**	7495-IP15-1	8IP-15	61.0 in/lbs (690 N-cm)
-20	AS5202-203-150F	3	**453H-1.547**	**453H-39**	**1C53A-1.547**	**1C53A-39**	7514-IP20-1	8IP-20	121.3 in/lbs (1370 N-cm)
-24	AS5202-243-150F	3	**453H-1.797**	**453H-45.5**	**1C53A-1.797**	**1C53A-45.5**	7514-IP20-1	8IP-20	121.3 in/lbs (1370 N-cm)
-32	AS5202-324-150F	4	**454H-2.421**	**454H-2.413**	–	–	7514-IP20-1	8IP-20	121.3 in/lbs (1370 N-cm)

*Tightening torques are calculated with a friction coefficient of μ = 0.14 and develop 90% of ultimate yield strength.
NOTE: AND10050 specifications shown in red.

Port Form Drill Inserts

Tube Dash No.	AccuPort Part No.	Part No. C5 Carbide (TiAlN)	Insert Screw	Insert Driver	Admissible Tightening Torque*
-4	AS5202-04Y-063F	**AS5202-04-C5A**	72556-IP8-1	8IP-8	15.5 in/lbs (175 N-cm)
-5	AS5202-05Z-063F	**AS5202-05-C5A**	72556-IP8-1	8IP-8	15.5 in/lbs (175 N-cm)
-6	AS5202-06Z-075F	**AS5202-06-C5A**	72556-IP8-1	8IP-8	15.5 in/lbs (175 N-cm)
-8	AS5202-080-075F	**AS5202-08-C5A**	72556-IP8-1	8IP-8	15.5 in/lbs (175 N-cm)
-10	AS5202-101-100F	**AS5202-10-C5A**	7495-IP15-1	8IP-15	61.0 in/lbs (690 N-cm)
-12	AS5202-122-125F	**AS5202-12-C5A**	7495-IP15-1	8IP-15	61.0 in/lbs (690 N-cm)
-14	AS5202-142-125F	**AS5202-14-C5A**	7495-IP15-1	8IP-15	61.0 in/lbs (690 N-cm)
-16	AS5202-162-125F	**AS5202-16-C5A**	7495-IP15-1	8IP-15	61.0 in/lbs (690 N-cm)
-20	AS5202-203-150F	**AS5202-20-C5A**	7495-IP15-1	8IP-15	61.0 in/lbs (690 N-cm)
-24	AS5202-243-150F	**AS5202-24-C5A**	7495-IP15-1	8IP-15	61.0 in/lbs (690 N-cm)
-32	AS5202-324-150F	**AS5202-32-C5A**	7495-IP15-1	8IP-15	61.0 in/lbs (690 N-cm)

*Tightening torques are calculated with a friction coefficient of μ = 0.14 and develop 90% of ultimate yield strength.

A92: 30 - 37
A92: 2 - 4
A92: 26 - 27
Key on A92: 1

Y - 2 series T-A inserts sold in multiples of 2.
3 - 4 series T-A inserts sold in multiples of 1.
Port form inserts sold in multiples of 2.
Insert screws sold in multiples of 10.

JDS-G173.1

Metric Shank Holders

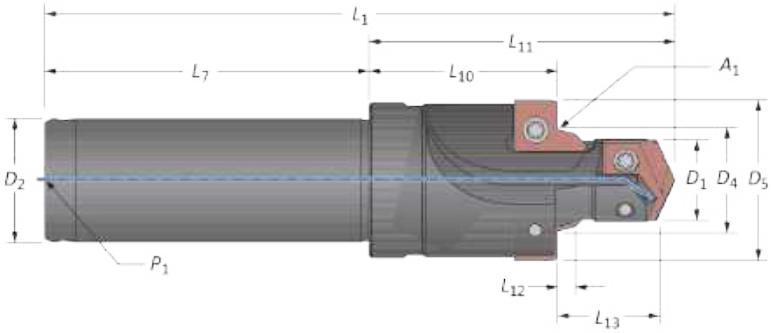

	Tube Dash No.	Cutting D_1	Cutting L_{13}	Cutting D_5	Seal Angle A_1	Seal Angle D_4	Seal Angle L_{12}	Holder L_{11}	Holder L_{10}	Holder L_1	Shank L_7	Shank D_2	Shank P_1	Port Thread Size	Part No.
	-4	0.413	0.709	0.945	15°	0.547	0.104	1.670	0.875	3.320	1.650	0.630	1/16 BSPT	M12 X 1.5	**G1731-04Y-16FM**
	-5	0.492	0.709	1.024	15°	0.626	0.104	1.670	0.858	3.320	1.650	0.630	1/16 BSPT	M14 X 1.5	**G1731-05Z-16FM**
	-6	0.571	0.748	1.142	15°	0.705	0.104	1.977	1.117	3.627	1.650	0.787	1/8 BSPT	M16 X 1.5	**G1731-060-20FM**
	-8	0.650	0.827	1.220	15°	0.783	0.104	2.127	1.161	3.777	1.650	0.787	1/8 BSPT	M18 X 1.5	**G1731-080-20FM**
	-10	0.807	0.866	1.378	15°	0.941	0.104	2.280	1.246	4.370	2.090	0.984	1/8 BSPT	M22 X 1.5	**G1731-101-25FM**
	-12	0.984	1.063	1.614	15°	1.161	0.132	2.820	1.553	5.100	2.280	1.260	1/4 BSPT	M27 X 2	**G1731-122-32FM**
i	-14	1.102	1.063	1.732	15°	1.280	0.132	2.820	1.526	5.100	2.280	1.260	1/4 BSPT	M30 X 2	**G1731-142-32FM**
	-16	1.221	1.063	1.969	15°	1.398	0.132	2.820	1.500	5.100	2.280	1.260	1/4 BSPT	M33 X 2	**G1731-162-32FM**
	-18	1.417	1.063	2.165	15°	1.594	0.132	3.207	1.844	5.786	2.580	1.260	1/4 BSPT	M38 X 2	**G1731-183-32FM***
	-20	1.575	1.063	2.402	15°	1.752	0.132	3.207	1.809	5.786	2.580	1.260	1/4 BSPT	M42 X 2	**G1731-203-32FM***
	-24	1.811	1.142	2.638	15°	1.988	0.132	3.207	1.687	5.786	2.580	1.260	1/4 BSPT	M48 X 2	**G1731-243-32FM***
	-32	2.284	1.260	3.031	15°	2.461	0.132	3.967	2.300	6.546	2.580	1.260	1/4 BSPT	M60 X 2	**G1731-324-32FM***
	C**	0.728	0.787	1.299	15°	0.862	0.104	2.140	1.281	4.231	2.090	0.984	1/8 BSPT	M20 X 1.5	**G1731-CV1-25FM**
	-4	10.50	18.00	24.00	15°	13.90	2.65	42.42	22.20	84.32	41.90	16.00	1/16 BSPT	M12 X 1.5	**G1731-04Y-16FM**
	-5	12.50	18.00	26.00	15°	15.90	2.65	42.42	21.80	84.32	41.90	16.00	1/16 BSPT	M14 X 1.5	**G1731-05Z-16FM**
	-6	14.50	19.00	29.00	15°	17.90	2.65	50.22	28.40	92.12	41.90	20.00	1/8 BSPT	M16 X 1.5	**G1731-060-20FM**
	-8	16.50	21.00	31.00	15°	19.90	2.65	54.03	29.50	95.93	41.90	20.00	1/8 BSPT	M18 X 1.5	**G1731-080-20FM**
	-10	20.50	22.00	35.00	15°	23.90	2.65	57.91	31.60	111.01	53.10	25.00	1/8 BSPT	M22 X 1.5	**G1731-101-25FM**
	-12	25.00	27.00	41.00	15°	29.50	3.35	71.63	39.40	129.53	57.90	32.00	1/4 BSPT	M27 X 2	**G1731-122-32FM**
m	-14	28.00	27.00	44.00	15°	32.50	3.35	71.63	39.70	129.53	57.90	32.00	1/4 BSPT	M30 X 2	**G1731-142-32FM**
	-16	31.00	27.00	50.00	15°	35.50	3.35	71.63	38.10	129.53	57.90	32.00	1/4 BSPT	M33 X 2	**G1731-162-32FM**
	-18	36.00	27.00	55.00	15°	40.50	3.35	81.46	46.80	146.96	65.50	32.00	1/4 BSPT	M38 X 2	**G1731-183-32FM***
	-20	40.00	27.00	61.00	15°	44.50	3.35	81.46	45.90	146.96	65.50	32.00	1/4 BSPT	M42 X 2	**G1731-203-32FM***
	-24	46.00	29.00	67.00	15°	50.50	3.35	81.46	42.80	146.96	65.50	32.00	1/4 BSPT	M48 X 2	**G1731-243-32FM***
	-32	58.00	32.00	77.00	15°	62.50	3.35	100.76	58.40	166.26	65.50	32.00	1/4 BSPT	M60 X 2	**G1731-324-32FM***
	C**	18.50	20.00	33.00	15°	21.90	2.65	54.36	32.50	107.46	53.10	25.00	1/8 BSPT	M20 X 1.5	**G1731-CV1-25FM**

***NOTICE:** Due to the cutting forces generated by this tool, a mechanical chuck is required. Please contact Application Engineering with any questions.
**Cartridge cavity.

A92: 30 - 37
Key on A92: 1
A92: 2 - 4
A92: 28

i = Imperial (in)
m = Metric (mm)

JDS-G173.1

Inserts

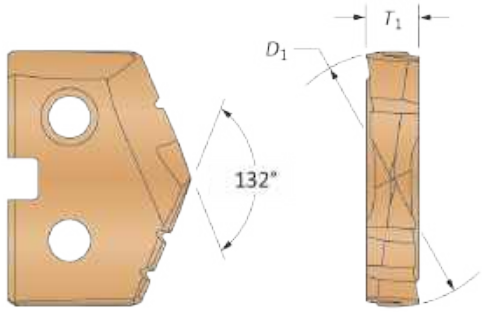

See section A30 for complete T-A insert details.

GEN2 T-A® Drill Inserts

Tube Dash No.	AccuPort Part No.	T-A® Insert Series	Part No. Super Cobalt (AM200®)	Part No. Carbide (AM300®)	Insert Screw	Insert Driver	Admissible Tightening Torque**
-4	G1731-04Y-16FM	Y	**45YH-10.5**	**4C2YP-10.5**	724-IP7-1	8IP-7	7.4 in/lbs (84 N-cm)
-5	G1731-05Z-16FM	Z	**45ZH-12.5**	**4C2ZP-12.5**	7247-IP7-1	8IP-7	7.4 in/lbs (84 N-cm)
-6	G1731-060-20FM	0	**450H-14.5**	**4C20P-14.5**	72567-IP8-1	8IP-8	15.5 in/lbs (175 N-cm)
-8	G1731-080-20FM	0	**450H-16.5**	**4C20P-16.5**	72567-IP8-1	8IP-8	15.5 in/lbs (175 N-cm)
-10	G1731-101-25FM	1	**451H-20.5**	**4C21P-20.5**	739-IP9-1	8IP-9	27.0 in/lbs (305 N-cm)
-12	G1731-122-32FM	2	**452H-25**	**4C22P-25**	7495-IP15-1	8IP-15	61.0 in/lbs (690 N-cm)
-14	G1731-142-32FM	2	**452H-28**	**4C22P-28**	7495-IP15-1	8IP-15	61.0 in/lbs (690 N-cm)
-16	G1731-162-32FM	2	**452H-31**	**4C22P-31**	7495-IP15-1	8IP-15	61.0 in/lbs (690 N-cm)
-18	G1731-183-32FM*	3	**453H-36**	–	7514-IP20-1	8IP-20	121.3 in/lbs (1370 N-cm)
-20	G1731-203-32FM*	3	**453H-40**	–	7514-IP20-1	8IP-20	121.3 in/lbs (1370 N-cm)
-24	G1731-243-32FM*	3	**453H-46**	–	7514-IP20-1	8IP-20	121.3 in/lbs (1370 N-cm)
-32	G1731-324-32FM*	4	**454H-58**	–	7514-IP20-1	8IP-20	121.3 in/lbs (1370 N-cm)
C***	G1731-CV1-25FM	1	**451H-18.5**	**4C21P-18.5**	739-IP9-1	8IP-9	27.0 in/lbs (305 N-cm)

***NOTICE:** Due to the cutting forces generated by this tool, a mechanical chuck is required. Please contact Application Engineering with any questions.
**Tightening torques are calculated with a friction coefficient of μ = 0.14 and develop 90% of ultimate yield strength.
***Cartridge cavity.

Port Form Drill Inserts

Tube Dash No.	AccuPort Part No.	Part No. C3 Carbide (AM200®)	Insert Screw	Insert Driver	Admissible Tightening Torque**
-4	G1731-04Y-16FM	**G1731-01-C3H**	72556-IP8-1	8IP-8	15.5 in/lbs (175 N-cm)
-5	G1731-05Z-16FM	**G1731-01-C3H**	72556-IP8-1	8IP-8	15.5 in/lbs (175 N-cm)
-6	G1731-060-20FM	**G1731-02-C3H**	72556-IP8-1	8IP-8	15.5 in/lbs (175 N-cm)
-8	G1731-080-20FM	**G1731-02-C3H**	72556-IP8-1	8IP-8	15.5 in/lbs (175 N-cm)
-10	G1731-101-25FM	**G1731-02-C3H**	72556-IP8-1	8IP-8	15.5 in/lbs (175 N-cm)
-12	G1731-122-32FM	**G1731-03-C3H**	72556-IP8-1	8IP-8	15.5 in/lbs (175 N-cm)
-14	G1731-142-32FM	**G1731-03-C3H**	72556-IP8-1	8IP-8	15.5 in/lbs (175 N-cm)
-16	G1731-162-32FM	**G1731-04-C3H**	7375-IP9-1	8IP-9	27.0 in/lbs (305 N-cm)
-18	G1731-183-32FM*	**G1731-04-C3H**	7375-IP9-1	8IP-9	27.0 in/lbs (305 N-cm)
-20	G1731-203-32FM*	**G1731-05-C3H**	7375-IP9-1	8IP-9	27.0 in/lbs (305 N-cm)
-24	G1731-243-32FM*	**G1731-05-C3H**	7375-IP9-1	8IP-9	27.0 in/lbs (305 N-cm)
-32	G1731-324-32FM*	**G1731-06-C3H**	7375-IP9-1	8IP-9	27.0 in/lbs (305 N-cm)
C***	G1731-CV1-25FM	**G1731-02-C3H**	72556-IP8-1	8IP-8	15.5 in/lbs (175 N-cm)

***NOTICE:** Due to the cutting forces generated by this tool, a mechanical chuck is required. Please contact Application Engineering with any questions.
**Tightening torques are calculated with a friction coefficient of μ = 0.14 and develop 90% of ultimate yield strength.
***Cartridge cavity.

A92: 30 - 37
A92: 2 - 4
A92: 28
Key on A92: 1

Y - 2 series T-A inserts sold in multiples of 2.
3 - 4 series T-A inserts sold in multiples of 1.
Port form inserts sold in multiples of 2.
Insert screws sold in multiples of 10.

Port and Thread Finishing Kits

J1926 | Imperial | Ferrous Materials

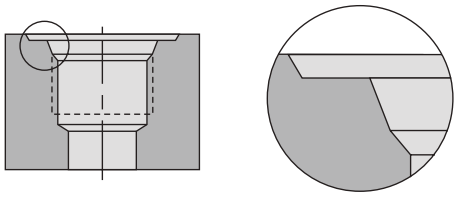

SAE J-1926-1 / ISO 11926-1

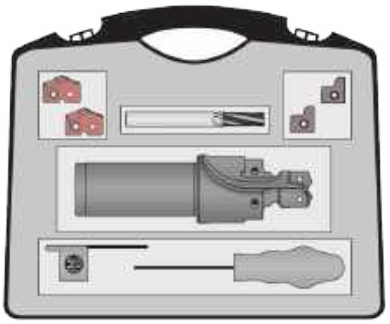

Port and Thread Finishing Kits

Tube Dash No.	AccuPort 432 Part No.	AccuPort 432 Port Thread Size	AccuPort 432 Qty	GEN2 T-A® Insert Super Cobalt (AM200®)	GEN2 T-A® Insert Qty	Port Form Insert C5 Carbide (TiAlN)	Port Form Insert Qty	AccuThread® Thread Mill Part No. (AM210®)	AccuThread® Thread Mill Qty	Kit Part No.
-4	J1926-04Y-063F	7/16-20 UNF-2B	1	45YH-.386	2	J1926-02-C5A	2	TMAK0438-20	1	**ATKK04-1926**
-5	J1926-05Z-063F	1/2-20 UNF-2B	1	45ZH-11.5	2	J1926-03-C5A	2	TMAK0438-20	1	**ATKK05-1926**
-6	J1926-060-075F	9/16-18 UNF-2B	1	450H-13	2	J1926-03-C5A	2	TMAK0563-18	1	**ATKK06-1926**
-8	J1926-080-075F	3/4-16 UNF-2B	1	450H-0022	2	J1926-07-C5A	2	TMAK0750-16	1	**ATKK08-1926**
-10	J1926-101-100F	7/8-14 UNF-2B	1	451H-20.5	2	J1926-04-C5A	2	TMAK0875-14	1	**ATKK10-1926**
-12	J1926-122-125F	1-1/16-12 UN-2B	1	452H-25	2	J1926-08-C5A	2	TMAK1063-12	1	**ATKK12-1926**
-14	J1926-142-125F	1-3/16-12 UN-2B	1	452H-28	2	J1926-08-C5A	2	TMAK1063-12	1	**ATKK14-1926**
-16	J1926-162-125F	1-5/16-12 UN-2B	1	452H-1.231	2	J1926-09-C5A	2	TMAK1063-12	1	**ATKK16-1926**
-20	J1926-203-150F	1-5/8-12 UN-2B	1	453H-39	1	J1926-10-C5A	2	TMAK1063-12	1	**ATKK20-1926**
-24	J1926-243-150F	1-7/8-12 UN-2B	1	453H-45.5	1	J1926-11-C5A	2	TMAK1063-12	1	**ATKK24-1926**
-32	J1926-324-150F	2-1/2-12 UN-2B	1	454H-61.5	1	J1926-12-C5A	2	TMAK1063-12	1	**ATKK32-1926**

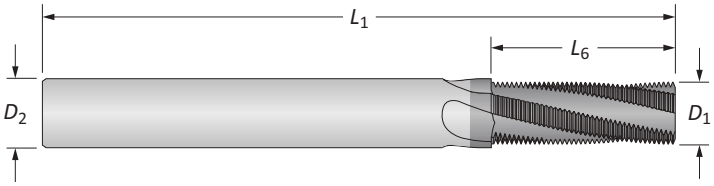

AccuThread® Port Specific Solid Carbide Thread Mills

Port Size	Pitch	Thread Mill D_1	Thread Mill L_6	Thread Mill D_2	Thread Mill L_1	Flutes	Part No.
-4 to -5	20	0.335	0.600	0.375	3.5	4	**TMAK0438-20**
-6	18	0.370	0.666	0.375	3.5	4	**TMAK0563-18**
-8	16	0.495	0.750	0.500	3.5	4	**TMAK0750-16**
-10	14	0.495	0.857	0.500	3.5	4	**TMAK0875-14**
-12 to -32	12	0.495	0.917	0.500	3.5	4	**TMAK1063-12**

AccuPort 432 specific thread mills - International Unified Series (UN) manufactured specifically for use with AccuPort 432 hydraulic port forms.
The length of cut allows full thread with one pass. Conforms with J1926 and SAE AS5202 port form specifications.

A92: 30 - 37
A92: 2 - 4
A92: 6 - 7
Key on A92: 1

Port and Thread Finishing Kits

J1926 | Imperial | Nonferrous Materials

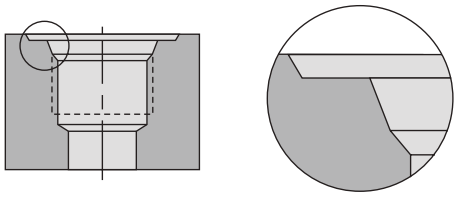

SAE J-1926-1 / ISO 11926-1

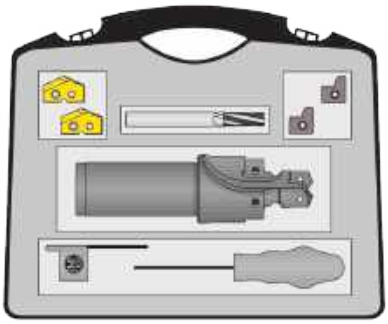

Port and Thread Finishing Kits

Tube Dash No.	AccuPort 432 Part No.	AccuPort 432 Port Thread Size	AccuPort 432 Qty	T-A® Insert Super Cobalt (TiN)	T-A® Insert Qty	Port Form Insert C5 Carbide (TiAlN)	Port Form Insert Qty	AccuThread® Thread Mill Part No. (Uncoated)	AccuThread® Thread Mill Qty	Kit Part No.
-4	J1926-04Y-063F	7/16-20 UNF-2B	1	15YT-.386	2	J1926-02-C5A	2	TMAU0438-20	1	**ATKU04-1926**
-5	J1926-05Z-063F	1/2-20 UNF-2B	1	15ZT-11.5	2	J1926-03-C5A	2	TMAU0438-20	1	**ATKU05-1926**
-6	J1926-060-075F	9/16-18 UNF-2B	1	150T-13	2	J1926-03-C5A	2	TMAU0563-18	1	**ATKU06-1926**
-8	J1926-080-075F	3/4-16 UNF-2B	1	150T-0022	2	J1926-07-C5A	2	TMAU0750-16	1	**ATKU08-1926**
-10	J1926-101-100F	7/8-14 UNF-2B	1	151T-20.5	2	J1926-04-C5A	2	TMAU0875-14	1	**ATKU10-1926**
-12	J1926-122-125F	1-1/16-12 UN-2B	1	152T-25	2	J1926-08-C5A	2	TMAU1063-12	1	**ATKU12-1926**
-14	J1926-142-125F	1-3/16-12 UN-2B	1	152T-28	2	J1926-08-C5A	2	TMAU1063-12	1	**ATKU14-1926**
-16	J1926-162-125F	1-5/16-12 UN-2B	1	152T-1.231	2	J1926-09-C5A	2	TMAU1063-12	1	**ATKU16-1926**
-20	J1926-203-150F	1-5/8-12 UN-2B	1	453T-39	1	J1926-10-C5A	2	TMAU1063-12	1	**ATKU20-1926**
-24	J1926-243-150F	1-7/8-12 UN-2B	1	453T-45.5	1	J1926-11-C5A	2	TMAU1063-12	1	**ATKU24-1926**
-32	J1926-324-150F	2-1/2-12 UN-2B	1	454T-61.5	1	J1926-12-C5A	2	TMAU1063-12	1	**ATKU32-1926**

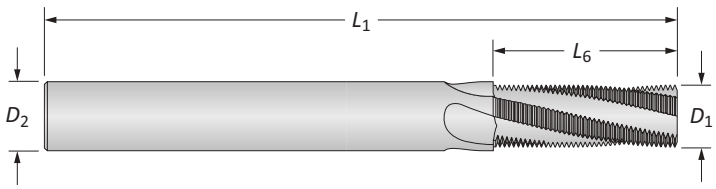

AccuThread® Port Specific Solid Carbide Thread Mills

Port Size	Pitch	Thread Mill D_1	Thread Mill L_6	Thread Mill D_2	Thread Mill L_1	Flutes	Part No.
-4 to -5	20	0.335	0.600	0.375	3.5	4	**TMAU0438-20**
-6	18	0.370	0.666	0.375	3.5	4	**TMAU0563-18**
-8	16	0.495	0.750	0.500	3.5	4	**TMAU0750-16**
-10	14	0.495	0.857	0.500	3.5	4	**TMAU0875-14**
-12 to -32	12	0.495	0.917	0.500	3.5	4	**TMAU1063-12**

AccuPort 432 specific thread mills - International Unified Series (UN) manufactured specifically for use with AccuPort 432 hydraulic port forms.
The length of cut allows full thread with one pass. Conforms with J1926 and SAE AS5202 port form specifications.

A92: 30 - 37
A92: 2 - 4
A92: 6 - 7
Key on A92: 1

Port and Thread Finishing Kits

J1926 | Metric | Ferrous Materials

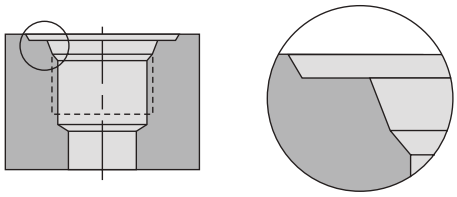

SAE J-1926-1 / ISO 11926-1

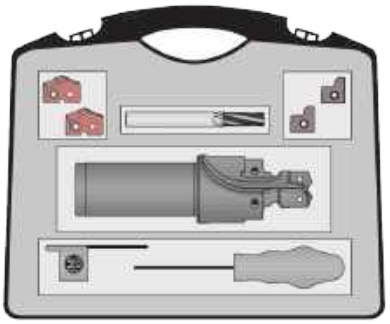

Port and Thread Finishing Kits

Tube Dash No.	AccuPort 432 Part No.	AccuPort 432 Port Thread Size	AccuPort 432 Qty	GEN2 T-A® Insert Super Cobalt (AM200®)	GEN2 T-A® Insert Qty	Port Form Insert C5 Carbide (TiAlN)	Port Form Insert Qty	AccuThread® Thread Mill Part No. (AM210®)	AccuThread® Thread Mill Qty	Kit Part No.
-4	J1926-04Y-16FM	7/16-20 UNF-2B	1	45YH-.386	2	J1926-02-C5A	2	TMAK0438-20M	1	**ATKK04-1926M**
-5	J1926-05Z-16FM	1/2-20 UNF-2B	1	45ZH-11.5	2	J1926-03-C5A	2	TMAK0438-20M	1	**ATKK05-1926M**
-6	J1926-060-20FM	9/16-18 UNF-2B	1	450H-13	2	J1926-03-C5A	2	TMAK0563-18M	1	**ATKK06-1926M**
-8	J1926-080-20FM	3/4-16 UNF-2B	1	450H-0022	2	J1926-07-C5A	2	TMAK0750-16M	1	**ATKK08-1926M**
-10	J1926-101-25FM	7/8-14 UNF-2B	1	451H-20.5	2	J1926-04-C5A	2	TMAK0875-14M	1	**ATKK10-1926M**
-12	J1926-122-32FM	1-1/16-12 UN-2B	1	452H-25	2	J1926-08-C5A	2	TMAK1063-12M	1	**ATKK12-1926M**
-14	J1926-142-32FM	1-3/16-12 UN-2B	1	452H-28	2	J1926-08-C5A	2	TMAK1063-12M	1	**ATKK14-1926M**
-16	J1926-162-32FM	1-5/16-12 UN-2B	1	452H-1.231	2	J1926-09-C5A	2	TMAK1063-12M	1	**ATKK16-1926M**
-20	J1926-203-32FM	1-5/8-12 UN-2B	1	453H-39	1	J1926-10-C5A	2	TMAK1063-12M	1	**ATKK20-1926M**
-24	J1926-243-32FM	1-7/8-12 UN-2B	1	453H-45.5	1	J1926-11-C5A	2	TMAK1063-12M	1	**ATKK24-1926M**
-32	J1926-324-32FM	2-1/2-12 UN-2B	1	454H-61.5	1	J1926-12-C5A	2	TMAK1063-12M	1	**ATKK32-1926M**

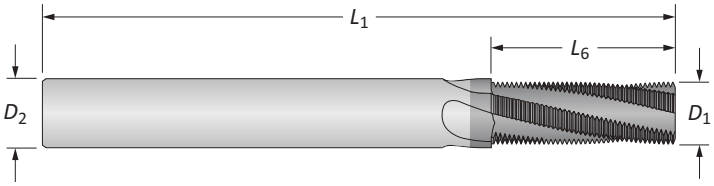

AccuThread® Port Specific Solid Carbide Thread Mills

Port Size	Pitch	Thread Mill D_1	Thread Mill L_6	Thread Mill D_2	Thread Mill L_1	Flutes	Part No.
-4 to -5	20	8.51	15.24	10.00	73.00	4	**TMAK0438-20M**
-6	18	9.40	16.92	10.00	73.00	4	**TMAK0563-18M**
-8	16	11.94	19.05	12.00	84.00	4	**TMAK0750-16M**
-10	14	11.94	21.77	12.00	84.00	4	**TMAK0875-14M**
-12 to -32	12	11.94	23.29	12.00	84.00	4	**TMAK1063-12M**

AccuPort 432 specific thread mills - International Unified Series (UN) manufactured specifically for use with AccuPort 432 hydraulic port forms.
The length of cut allows full thread with one pass. Conforms with J1926 and SAE AS5202 port form specifications.

A92: 30 - 37
A92: 2 - 4
A92: 8 - 9
Key on A92: 1

Port and Thread Finishing Kits

J1926 | Metric | Nonferrous Materials

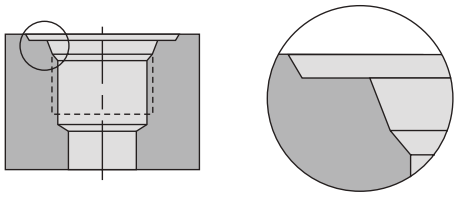

SAE J-1926-1 / ISO 11926-1

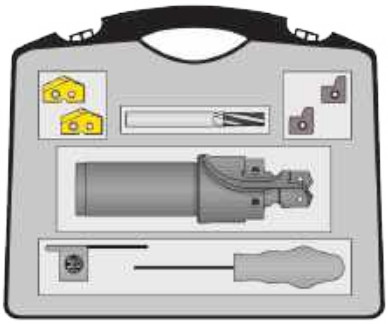

Port and Thread Finishing Kits

Tube Dash No.	AccuPort 432 Part No.	AccuPort 432 Port Thread Size	AccuPort 432 Qty	T-A® Insert Super Cobalt (TiN)	T-A® Insert Qty	Port Form Insert C5 Carbide (TiAlN)	Port Form Insert Qty	AccuThread® Thread Mill Part No. (Uncoated)	AccuThread® Thread Mill Qty	Kit Part No.
-4	J1926-04Y-16FM	7/16-20 UNF-2B	1	15YT-.386	2	J1926-02-C5A	2	TMAU0438-20M	1	**ATKU04-1926M**
-5	J1926-05Z-16FM	1/2-20 UNF-2B	1	15ZT-11.5	2	J1926-03-C5A	2	TMAU0438-20M	1	**ATKU05-1926M**
-6	J1926-060-20FM	9/16-18 UNF-2B	1	150T-13	2	J1926-03-C5A	2	TMAU0563-18M	1	**ATKU06-1926M**
-8	J1926-080-20FM	3/4-16 UNF-2B	1	150T-0022	2	J1926-07-C5A	2	TMAU0750-16M	1	**ATKU08-1926M**
-10	J1926-101-25FM	7/8-14 UNF-2B	1	151T-20.5	2	J1926-04-C5A	2	TMAU0875-14M	1	**ATKU10-1926M**
-12	J1926-122-32FM	1-1/16-12 UN-2B	1	152T-25	2	J1926-08-C5A	2	TMAU1063-12M	1	**ATKU12-1926M**
-14	J1926-142-32FM	1-3/16-12 UN-2B	1	152T-28	2	J1926-08-C5A	2	TMAU1063-12M	1	**ATKU14-1926M**
-16	J1926-162-32FM	1-5/16-12 UN-2B	1	152T-1.231	2	J1926-09-C5A	2	TMAU1063-12M	1	**ATKU16-1926M**
-20	J1926-203-32FM	1-5/8-12 UN-2B	1	453T-39	1	J1926-10-C5A	2	TMAU1063-12M	1	**ATKU20-1926M**
-24	J1926-243-32FM	1-7/8-12 UN-2B	1	453T-45.5	1	J1926-11-C5A	2	TMAU1063-12M	1	**ATKU24-1926M**
-32	J1926-324-32FM	2-1/2-12 UN-2B	1	454T-61.5	1	J1926-12-C5A	2	TMAU1063-12M	1	**ATKU32-1926M**

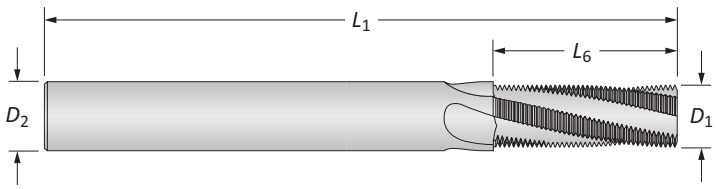

AccuThread® Port Specific Solid Carbide Thread Mills

Port Size	Pitch	Thread Mill D_1	Thread Mill L_6	Thread Mill D_2	Thread Mill L_1	Flutes	Part No.
-4 to -5	20	8.51	15.24	10.00	73.00	4	**TMAU0438-20M**
-6	18	9.40	16.92	10.00	73.00	4	**TMAU0563-18M**
-8	16	11.94	19.05	12.00	84.00	4	**TMAU0750-16M**
-10	14	11.94	21.77	12.00	84.00	4	**TMAU0875-14M**
-12 to -32	12	11.94	23.29	12.00	84.00	4	**TMAU1063-12M**

AccuPort 432 specific thread mills - International Unified Series (UN) manufactured specifically for use with AccuPort 432 hydraulic port forms.
The length of cut allows full thread with one pass. Conforms with J1926 and SAE AS5202 port form specifications.

A92: 30 - 37
A92: 2 - 4
A92: 8 - 9
Key on A92: 1

Port and Thread Finishing Kits

I6149 | No ID Ridge | Ferrous Materials

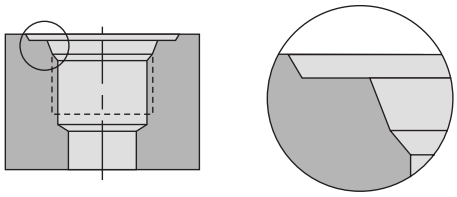

ISO 6149-1:2006 / SAE J-2244/1

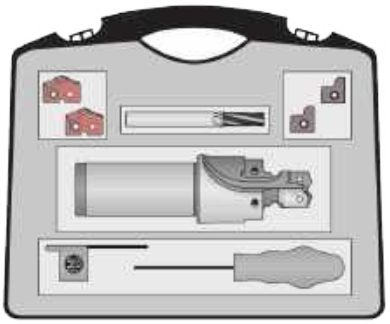

Port and Thread Finishing Kits

Tube Dash No.	AccuPort 432 Part No.	AccuPort 432 Port Thread Size	AccuPort 432 Qty	GEN2 T-A® Insert Super Cobalt (AM200®)	GEN2 T-A® Insert Qty	Port Form Insert C5 Carbide (TiAlN)	Port Form Insert Qty	AccuThread® Thread Mill Part No. (AM210®)	AccuThread® Thread Mill Qty	Kit Part No.
-4	I6149-04RY-16FM	M12 X 1.5	1	45YH-10.5	2	I6149-04-C5A	2	TMMK1000-150M	1	**ATKK04-6149**
-5	I6149-05RZ-16FM	M14 X 1.5	1	45ZH-12.5	2	I6149-04-C5A	2	TMMK1400-150M	1	**ATKK05-6149**
-6	I6149-06R0-20FM	M16 X 1.5	1	450H-14.5	2	I6149-06-C5A	2	TMMK1400-150M	1	**ATKK06-6149**
-8	I6149-08R0-20FM	M18 X 1.5	1	450H-16.5	2	I6149-06-C5A	2	TMMK1800-150M	1	**ATKK08-6149**
-10	I6149-10R1-25FM	M22 X 1.5	1	451H-20.5	2	I6149-04-C5A	2	TMMK1800-150M	1	**ATKK10-6149**
-12	I6149-12R2-32FM	M27 X 2	1	452H-25	2	I6149-12-C5A	2	TMMK2000-200M	1	**ATKK12-6149**
-14	I6149-14R2-32FM	M30 X 2	1	452H-28	2	I6149-14-C5A	2	TMMK2000-200M	1	**ATKK14-6149**
-16	I6149-16R2-32FM	M33 X 2	1	452H-31	2	I6149-16-C5A	2	TMMK2000-200M	1	**ATKK16-6149**
-20	I6149-20R3-32FM	M42 X 2	1	453H-40	1	I6149-20-C5A	2	TMMK2000-200M	1	**ATKK20-6149**
-24	I6149-24R3-32FM	M48 X 2	1	453H-46	1	I6149-24-C5A	2	TMMK2000-200M	1	**ATKK24-6149**
-32	I6149-32R4-32FM	M60 X 2	1	454H-58	1	I6149-32-C5A	2	TMMK2000-200M	1	**ATKK32-6149**

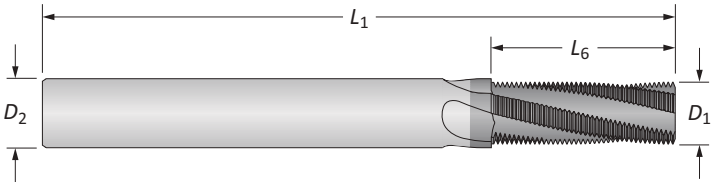

AccuThread® Port Specific Solid Carbide Thread Mills

Port Size	Pitch	Thread Mill D_1	Thread Mill L_6	Thread Mill D_2	Thread Mill L_1	Flutes	Part No.
-4	1.50	7.40	19.50	8.00	64.00	4	**TMMK1000-150M**
-5 to -6	1.50	10.90	27.00	12.00	84.00	4	**TMMK1400-150M**
-8 to -10	1.50	11.90	31.50	12.00	84.00	4	**TMMK1800-150M**
-12 to -32	2.00	11.95	30.00	12.00	84.00	4	**TMMK2000-200M**

AccuPort 432 specific thread mills - International Unified Series (UN) manufactured specifically for use with AccuPort 432 hydraulic port forms.
The length of cut allows full thread with one pass. Conforms with J1926 and SAE AS5202 port form specifications.

A92: 30 - 37
A92: 2 - 4
A92: 12 - 13
Key on A92: 1

Port and Thread Finishing Kits

I6149 | No ID Ridge | Nonferrous Materials

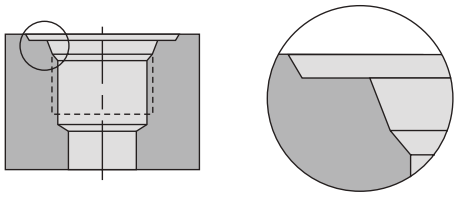

ISO 6149-1:2006 / SAE J-2244/1

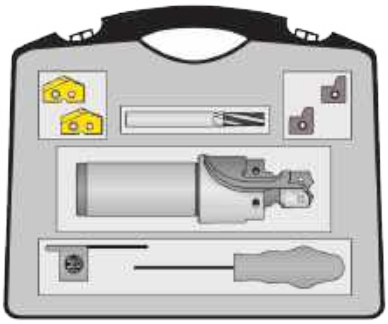

Port and Thread Finishing Kits

Tube Dash No.	AccuPort 432 Part No.	AccuPort 432 Port Thread Size	AccuPort 432 Qty	T-A® Insert Super Cobalt (TiN)	T-A® Insert Qty	Port Form Insert C5 Carbide (TiAlN)	Port Form Insert Qty	AccuThread® Thread Mill Part No. (Uncoated)	AccuThread® Thread Mill Qty	Kit Part No.
-4	I6149-04RY-16FM	M12 X 1.5	1	15YT-10.5	2	I6149-04-C5A	2	TMMU1000-150M	1	**ATKU04-6149**
-5	I6149-05RZ-16FM	M14 X 1.5	1	15ZT-12.5	2	I6149-04-C5A	2	TMMU1400-150M	1	**ATKU05-6149**
-6	I6149-06R0-20FM	M16 X 1.5	1	150T-14.5	2	I6149-06-C5A	2	TMMU1400-150M	1	**ATKU06-6149**
-8	I6149-08R0-20FM	M18 X 1.5	1	150T-16.5	2	I6149-06-C5A	2	TMMU1800-150M	1	**ATKU08-6149**
-10	I6149-10R1-25FM	M22 X 1.5	1	151T-20.5	2	I6149-04-C5A	2	TMMU1800-150M	1	**ATKU10-6149**
-12	I6149-12R2-32FM	M27 X 2	1	152T-25	2	I6149-12-C5A	2	TMMU2000-200M	1	**ATKU12-6149**
-14	I6149-14R2-32FM	M30 X 2	1	152T-28	2	I6149-14-C5A	2	TMMU2000-200M	1	**ATKU14-6149**
-16	I6149-16R2-32FM	M33 X 2	1	152T-31	2	I6149-16-C5A	2	TMMU2000-200M	1	**ATKU16-6149**
-20	I6149-20R3-32FM	M42 X 2	1	453T-40	1	I6149-20-C5A	2	TMMU2000-200M	1	**ATKU20-6149**
-24	I6149-24R3-32FM	M48 X 2	1	453T-46	1	I6149-24-C5A	2	TMMU2000-200M	1	**ATKU24-6149**
-32	I6149-32R4-32FM	M60 X 2	1	454T-58	1	I6149-32-C5A	2	TMMU2000-200M	1	**ATKU32-6149**

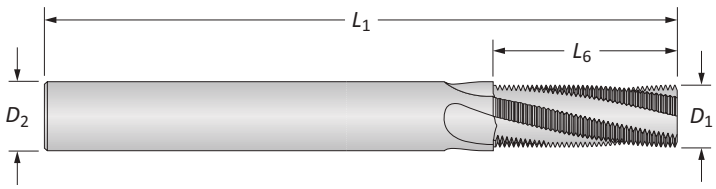

AccuThread® Port Specific Solid Carbide Thread Mills

Port Size	Pitch	Thread Mill D_1	Thread Mill L_6	Thread Mill D_2	Thread Mill L_1	Flutes	Part No.
-4	1.50	7.40	19.50	8.00	64.00	4	**TMMU1000-150M**
-5 to -6	1.50	10.90	27.00	12.00	84.00	4	**TMMU1400-150M**
-8 to -10	1.50	11.90	31.50	12.00	84.00	4	**TMMU1800-150M**
-12 to -32	2.00	11.95	30.00	12.00	84.00	4	**TMMU2000-200M**

AccuPort 432 specific thread mills - International Unified Series (UN) manufactured specifically for use with AccuPort 432 hydraulic port forms.
The length of cut allows full thread with one pass. Conforms with J1926 and SAE AS5202 port form specifications.

A92: 30 - 37
A92: 2 - 4
A92: 12 - 13
Key on A92: 1

Port and Thread Finishing Kits

I6149 | ID Ridge | Ferrous Materials

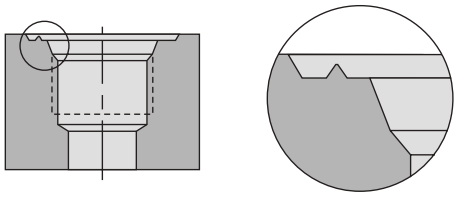

ISO 6149-1:2006 / SAE J-2244/1

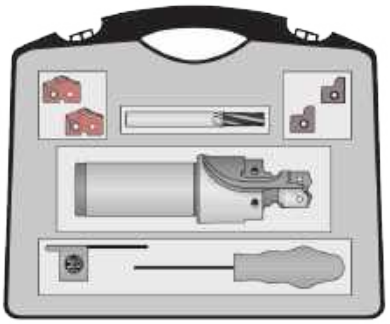

Port and Thread Finishing Kits

Tube Dash No.	AccuPort 432 Part No.	AccuPort 432 Port Thread Size	AccuPort 432 Qty	GEN2 T-A® Insert Super Cobalt (AM200®)	GEN2 T-A® Insert Qty	Port Form Insert C5 Carbide (TiAlN)	Port Form Insert Qty	AccuThread® Thread Mill Part No. (AM210®)	AccuThread® Thread Mill Qty	Kit Part No.
-4	I6149-04RY-16FM	M12 X 1.5	1	45YH-10.5	2	I6149-04R-C5A	2	TMMK1000-150M	1	**ATKK04R-6149**
-5	I6149-05RZ-16FM	M14 X 1.5	1	45ZH-12.5	2	I6149-04R-C5A	2	TMMK1400-150M	1	**ATKK05R-6149**
-6	I6149-06R0-20FM	M16 X 1.5	1	450H-14.5	2	I6149-06R-C5A	2	TMMK1400-150M	1	**ATKK06R-6149**
-8	I6149-08R0-20FM	M18 X 1.5	1	450H-16.5	2	I6149-06R-C5A	2	TMMK1800-150M	1	**ATKK08R-6149**
-10	I6149-10R1-25FM	M22 X 1.5	1	451H-20.5	2	I6149-04R-C5A	2	TMMK1800-150M	1	**ATKK10R-6149**
-12	I6149-12R2-32FM	M27 X 2	1	452H-25	2	I6149-12R-C5A	2	TMMK2000-200M	1	**ATKK12R-6149**
-14	I6149-14R2-32FM	M30 X 2	1	452H-28	2	I6149-14R-C5A	2	TMMK2000-200M	1	**ATKK14R-6149**
-16	I6149-16R2-32FM	M33 X 2	1	452H-31	2	I6149-16R-C5A	2	TMMK2000-200M	1	**ATKK16R-6149**
-20	I6149-20R3-32FM	M42 X 2	1	453H-40	1	I6149-20R-C5A	2	TMMK2000-200M	1	**ATKK20R-6149**
-24	I6149-24R3-32FM	M48 X 2	1	453H-46	1	I6149-24R-C5A	2	TMMK2000-200M	1	**ATKK24R-6149**
-32	I6149-32R4-32FM	M60 X 2	1	454H-58	1	I6149-32R-C5A	2	TMMK2000-200M	1	**ATKK32R-6149**

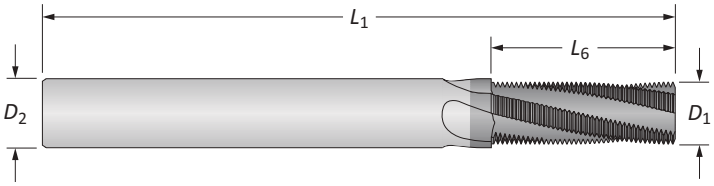

AccuThread® Port Specific Solid Carbide Thread Mills

Port Size	Pitch	Thread Mill D_1	Thread Mill L_6	Thread Mill D_2	Thread Mill L_1	Flutes	Part No.
-4	1.50	7.40	19.50	8.00	64.00	4	**TMMK1000-150M**
-5 to -6	1.50	10.90	27.00	12.00	84.00	4	**TMMK1400-150M**
-8 to -10	1.50	11.90	31.50	12.00	84.00	4	**TMMK1800-150M**
-12 to -32	2.00	11.95	30.00	12.00	84.00	4	**TMMK2000-200M**

AccuPort 432 specific thread mills - International Unified Series (UN) manufactured specifically for use with AccuPort 432 hydraulic port forms.
The length of cut allows full thread with one pass. Conforms with J1926 and SAE AS5202 port form specifications.

A92: 30 - 37
A92: 2 - 4
A92: 12 - 13
Key on A92: 1

Port and Thread Finishing Kits

I6149 | ID Ridge | Nonferrous Materials

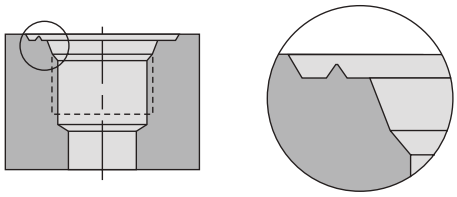

ISO 6149-1:2006 / SAE J-2244/1

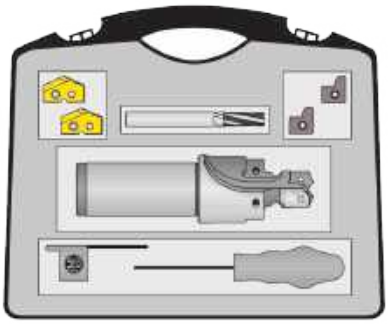

Port and Thread Finishing Kits

Tube Dash No.	AccuPort 432 Part No.	AccuPort 432 Port Thread Size	AccuPort 432 Qty	T-A® Insert Super Cobalt (TiN)	T-A® Insert Qty	Port Form Insert C5 Carbide (TiAlN)	Port Form Insert Qty	AccuThread® Thread Mill Part No. (Uncoated)	AccuThread® Thread Mill Qty	Kit Part No.
-4	I6149-04RY-16FM	M12 X 1.5	1	15YT-10.5	2	I6149-04R-C5A	2	TMMU1000-150M	1	**ATKU04R-6149**
-5	I6149-05RZ-16FM	M14 X 1.5	1	15ZT-12.5	2	I6149-04R-C5A	2	TMMU1400-150M	1	**ATKU05R-6149**
-6	I6149-06R0-20FM	M16 X 1.5	1	150T-14.5	2	I6149-06R-C5A	2	TMMU1400-150M	1	**ATKU06R-6149**
-8	I6149-08R0-20FM	M18 X 1.5	1	150T-16.5	2	I6149-06R-C5A	2	TMMU1800-150M	1	**ATKU08R-6149**
-10	I6149-10R1-25FM	M22 X 1.5	1	151T-20.5	2	I6149-04R-C5A	2	TMMU1800-150M	1	**ATKU10R-6149**
-12	I6149-12R2-32FM	M27 X 2	1	152T-25	2	I6149-12R-C5A	2	TMMU2000-200M	1	**ATKU12R-6149**
-14	I6149-14R2-32FM	M30 X 2	1	152T-28	2	I6149-14R-C5A	2	TMMU2000-200M	1	**ATKU14R-6149**
-16	I6149-16R2-32FM	M33 X 2	1	152T-31	2	I6149-16R-C5A	2	TMMU2000-200M	1	**ATKU16R-6149**
-20	I6149-20R3-32FM	M42 X 2	1	453T-40	1	I6149-20R-C5A	2	TMMU2000-200M	1	**ATKU20R-6149**
-24	I6149-24R3-32FM	M48 X 2	1	453T-46	1	I6149-24R-C5A	2	TMMU2000-200M	1	**ATKU24R-6149**
-32	I6149-32R4-32FM	M60 X 2	1	454T-58	1	I6149-32R-C5A	2	TMMU2000-200M	1	**ATKU32R-6149**

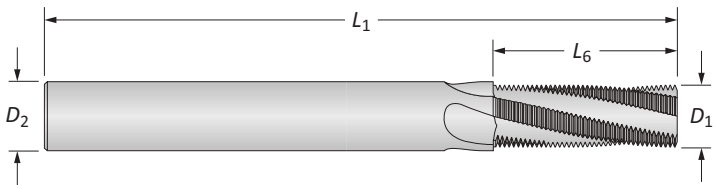

AccuThread® Port Specific Solid Carbide Thread Mills

Port Size	Pitch	Thread Mill D_1	Thread Mill L_6	Thread Mill D_2	Thread Mill L_1	Flutes	Part No.
-4	1.50	7.40	19.50	8.00	64.00	4	**TMMU1000-150M**
-5 to -6	1.50	10.90	27.00	12.00	84.00	4	**TMMU1400-150M**
-8 to -10	1.50	11.90	31.50	12.00	84.00	4	**TMMU1800-150M**
-12 to -32	2.00	11.95	30.00	12.00	84.00	4	**TMMU2000-200M**

AccuPort 432 specific thread mills - International Unified Series (UN) manufactured specifically for use with AccuPort 432 hydraulic port forms.
The length of cut allows full thread with one pass. Conforms with J1926 and SAE AS5202 port form specifications.

A92: 30 - 37
A92: 2 - 4
A92: 12 - 13
Key on A92: 1

A DRILLING
B BORING
C REAMING
D BURNISHING
E THREADING
X SPECIALS

Port and Thread Finishing Kits

AS5202 | Ferrous Materials

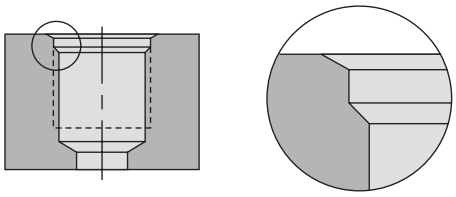

SAE AS5202

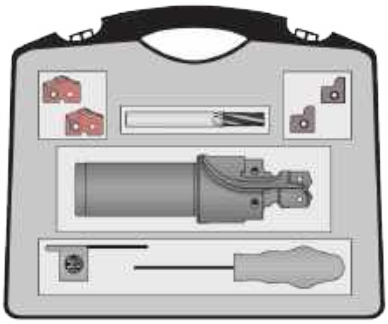

Port and Thread Finishing Kits

Tube Dash No.	AccuPort 432 Part No.	AccuPort 432 Port Thread Size	AccuPort 432 Qty	GEN2 T-A® Insert Super Cobalt (AM200®)	GEN2 T-A® Insert Qty	Port Form Insert C5 Carbide (TiAlN)	Port Form Insert Qty	AccuThread® Thread Mill Part No. (AM210®)	AccuThread® Thread Mill Qty	Kit Part No.
-4	AS5202-04Y-063F	7/16-20 UNJF-3B	1	45YH-.390	2	AS5202-04-C5A	2	TMAK0438-20	1	**ATKK04-5202**
-5	AS5202-05Z-063F	1/2-20 UNJF-3B	1	45ZH-11.5	2	AS5202-05-C5A	2	TMAK0438-20	1	**ATKK05-5202**
-6	AS5202-06Z-075F	9/16-18 UNJF-3B	1	45ZH-.510	2	AS5202-06-C5A	2	TMAK0563-18	1	**ATKK06-5202**
-8	AS5202-080-075F	3/4-16 UNJF-3B	1	450H-17.5	2	AS5202-08-C5A	2	TMAK0750-16	1	**ATKK08-5202**
-10	AS5202-101-100F	7/8-14 UNJF-3B	1	451H-20.5	2	AS5202-10-C5A	2	TMAK0875-14	1	**ATKK10-5202**
-12	AS5202-122-125F	1-1/16-12 UNJ-3B	1	452H-25	2	AS5202-12-C5A	2	TMAK1063-12	1	**ATKK12-5202**
-14	AS5202-142-125F	1-3/16-12 UNJ-3B	1	452H-1.109	2	AS5202-14-C5A	2	TMAK1063-12	1	**ATKK14-5202**
-16	AS5202-162-125F	1-5/16-12 UNJ-3B	1	452H-1.234	2	AS5202-16-C5A	2	TMAK1063-12	1	**ATKK16-5202**
-20	AS5202-203-150F	1-5/8-12 UNJ-3B	1	453H-1.547	1	AS5202-20-C5A	2	TMAK1063-12	1	**ATKK20-5202**
-24	AS5202-243-150F	1-7/8-12 UNJ-3B	1	453H-1.797	1	AS5202-24-C5A	2	TMAK1063-12	1	**ATKK24-5202**
-32	AS5202-324-150F	2-1/2-12 UNJ-3B	1	454H-61.5	1	AS5202-32-C5A	2	TMAK1063-12	1	**ATKK32-5202**

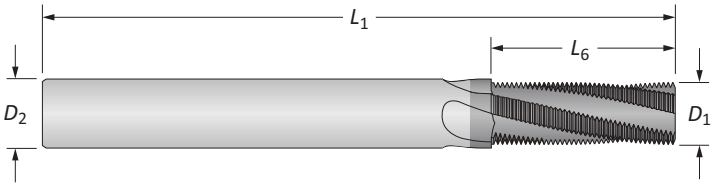

AccuThread® Port Specific Solid Carbide Thread Mills

Port Size	Pitch	Thread Mill D_1	Thread Mill L_6	Thread Mill D_2	Thread Mill L_1	Flutes	Part No.
-4 to -5	20	0.335	0.600	0.375	3.5	4	**TMAK0438-20**
-6	18	0.370	0.666	0.375	3.5	4	**TMAK0563-18**
-8	16	0.495	0.750	0.500	3.5	4	**TMAK0750-16**
-10	14	0.495	0.857	0.500	3.5	4	**TMAK0875-14**
-12 to -32	12	0.495	0.917	0.500	3.5	4	**TMAK1063-12**

AccuPort 432 specific thread mills - International Unified Series (UN) manufactured specifically for use with AccuPort 432 hydraulic port forms.
The length of cut allows full thread with one pass. Conforms with J1926 and SAE AS5202 port form specifications.

A92: 30 - 37
Key on A92: 1
A92: 2 - 4
A92: 14 - 15

Port and Thread Finishing Kits

AS5202 | Nonferrous Materials

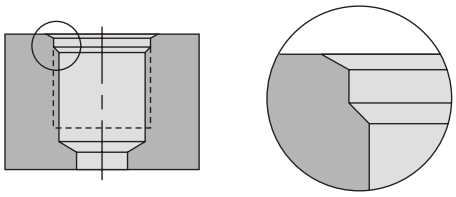

SAE AS5202

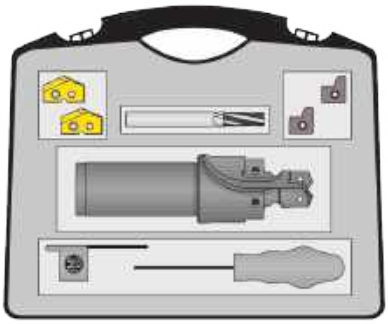

Port and Thread Finishing Kits

Tube Dash No.	AccuPort 432 Part No.	AccuPort 432 Port Thread Size	AccuPort 432 Qty	T-A® Insert Super Cobalt (TiN)	T-A® Insert Qty	Port Form Insert C5 Carbide (TiAlN)	Port Form Insert Qty	AccuThread® Thread Mill Part No. (Uncoated)	AccuThread® Thread Mill Qty	Kit Part No.
-4	AS5202-04Y-063F	7/16-20 UNJF-3B	1	15YT-.390	2	AS5202-04-C5A	2	TMAU0438-20	1	**ATKU04-5202**
-5	AS5202-05Z-063F	1/2-20 UNJF-3B	1	15ZT-11.5	2	AS5202-05-C5A	2	TMAU0438-20	1	**ATKU05-5202**
-6	AS5202-06Z-075F	9/16-18 UNJF-3B	1	15ZT-.510	2	AS5202-06-C5A	2	TMAU0563-18	1	**ATKU06-5202**
-8	AS5202-080-075F	3/4-16 UNJF-3B	1	150T-17.5	2	AS5202-08-C5A	2	TMAU0750-16	1	**ATKU08-5202**
-10	AS5202-101-100F	7/8-14 UNJF-3B	1	151T-20.5	2	AS5202-10-C5A	2	TMAU0875-14	1	**ATKU10-5202**
-12	AS5202-122-125F	1-1/16-12 UNJ-3B	1	152T-25	2	AS5202-12-C5A	2	TMAU1063-12	1	**ATKU12-5202**
-14	AS5202-142-125F	1-3/16-12 UNJ-3B	1	152T-1.109	2	AS5202-14-C5A	2	TMAU1063-12	1	**ATKU14-5202**
-16	AS5202-162-125F	1-5/16-12 UNJ-3B	1	152T-1.234	2	AS5202-16-C5A	2	TMAU1063-12	1	**ATKU16-5202**
-20	AS5202-203-150F	1-5/8-12 UNJ-3B	1	453T-1.547	1	AS5202-20-C5A	2	TMAU1063-12	1	**ATKU20-5202**
-24	AS5202-243-150F	1-7/8-12 UNJ-3B	1	453T-1.797	1	AS5202-24-C5A	2	TMAU1063-12	1	**ATKU24-5202**
-32	AS5202-324-150F	2-1/2-12 UNJ-3B	1	454T-61.5	1	AS5202-32-C5A	2	TMAU1063-12	1	**ATKU32-5202**

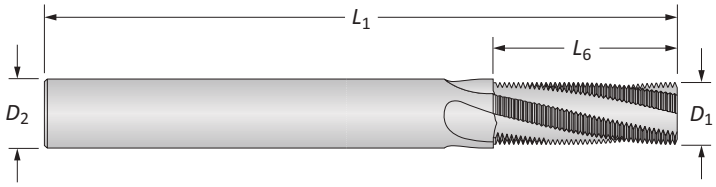

AccuThread® Port Specific Solid Carbide Thread Mills

Port Size	Pitch	Thread Mill D_1	Thread Mill L_6	Thread Mill D_2	Thread Mill L_1	Flutes	Part No.
-4 to -5	20	0.335	0.600	0.375	3.5	4	**TMAU0438-20**
-6	18	0.370	0.666	0.375	3.5	4	**TMAU0563-18**
-8	16	0.495	0.750	0.500	3.5	4	**TMAU0750-16**
-10	14	0.495	0.857	0.500	3.5	4	**TMAU0875-14**
-12 to -32	12	0.495	0.917	0.500	3.5	4	**TMAU1063-12**

AccuPort 432 specific thread mills - International Unified Series (UN) manufactured specifically for use with AccuPort 432 hydraulic port forms.
The length of cut allows full thread with one pass. Conforms with J1926 and SAE AS5202 port form specifications.

A92: 30 - 37
A92: 2 - 4
A92: 14 - 15
Key on A92: 1

Port and Thread Finishing Kits

G1731 | Ferrous Materials

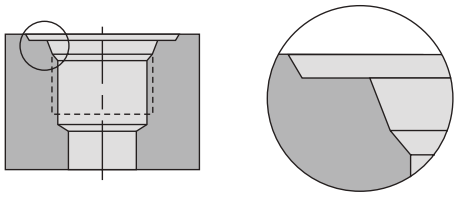

JDS-G173.1

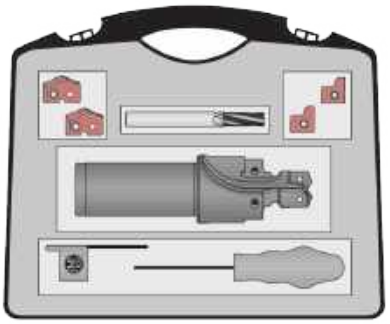

Port and Thread Finishing Kits

Tube Dash No.	AccuPort 432 Part No.	AccuPort 432 Port Thread Size	AccuPort 432 Qty	GEN2 T-A® Insert Super Cobalt (AM200®)	GEN2 T-A® Insert Qty	Port Form Insert C3 Carbide (AM200®)	Port Form Insert Qty	AccuThread® Thread Mill Part No. (AM210®)	AccuThread® Thread Mill Qty	Kit Part No.
-4	G1731-04Y-16FM	M12 X 1.5	1	45YH-10.5	2	G1731-01-C3H	2	TMMK1000-150M	1	**ATKK04-G1731**
-5	G1731-05Z-16FM	M14 X 1.5	1	45ZH-12.5	2	G1731-01-C3H	2	TMMK1400-150M	1	**ATKK05-G1731**
-6	G1731-060-20FM	M16 X 1.5	1	450H-14.5	2	G1731-02-C3H	2	TMMK1400-150M	1	**ATKK06-G1731**
-8	G1731-080-20FM	M18 X 1.5	1	450H-16.5	2	G1731-02-C3H	2	TMMK1800-150M	1	**ATKK08-G1731**
-10	G1731-101-25FM	M22 X 1.5	1	451H-20.5	2	G1731-02-C3H	2	TMMK1800-150M	1	**ATKK10-G1731**
-12	G1731-122-32FM	M27 X 2	1	452H-25	2	G1731-03-C3H	2	TMMK2000-200M	1	**ATKK12-G1731**
-14	G1731-142-32FM	M30 X 2	1	452H-28	2	G1731-03-C3H	2	TMMK2000-200M	1	**ATKK14-G1731**
-16	G1731-162-32FM	M33 X 2	1	452H-31	2	G1731-04-C3H	2	TMMK2000-200M	1	**ATKK16-G1731**
-18	G1731-183-32FM	M38 X 2	1	453H-36	1	G1731-04-C3H	2	TMMK2000-200M	1	**ATKK18-G1731**
-20	G1731-203-32FM	M42 X 2	1	453H-40	1	G1731-05-C3H	2	TMMK2000-200M	1	**ATKK20-G1731**
-24	G1731-243-32FM	M48 X 2	1	453H-46	1	G1731-05-C3H	2	TMMK2000-200M	1	**ATKK24-G1731**
-32	G1731-324-32FM	M60 X 2	1	454H-58	1	G1731-06-C3H	2	TMMK2000-200M	1	**ATKK32-G1731**

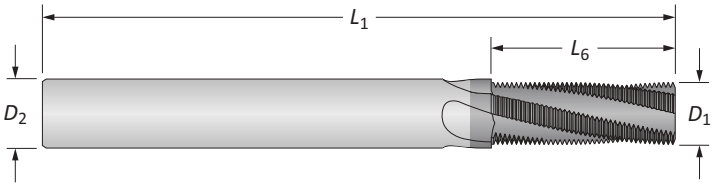

AccuThread® Port Specific Solid Carbide Thread Mills

Port Size	Pitch	Thread Mill D_1	Thread Mill L_6	Thread Mill D_2	Thread Mill L_1	Flutes	Part No.
-4	1.50	7.40	19.50	8.00	64.00	4	**TMMK1000-150M**
-5 to -6	1.50	10.90	27.00	12.00	84.00	4	**TMMK1400-150M**
-8 to -10	1.50	11.90	31.50	12.00	84.00	4	**TMMK1800-150M**
-12 to -32	2.00	11.95	30.00	12.00	84.00	4	**TMMK2000-200M**

AccuPort 432 specific thread mills - International Unified Series (UN) manufactured specifically for use with AccuPort 432 hydraulic port forms.
The length of cut allows full thread with one pass. Conforms with J1926 and SAE AS5202 port form specifications.

A92: 30 - 37
Key on A92: 1
A92: 2 - 4
A92: 16 - 17

Notes

Recommended Drilling Data | Imperial (inch)

HSS

ISO	Material	Hardness (BHN)	Grade	Speed (SFM) TiN	TiAlN	TiCN	AM200®	Feed Rate (IPR) by Tube Size and T-A® Insert Series: Tube No. 4 - 5, T-A Series Y - Z	Tube No. 6 - 8, T-A Series 0	Tube No. 10, T-A Series 1	Tube No. 12 - 16, T-A Series 2	Tube No. 20 - 24, T-A Series 3	Tube No. 32, T-A Series 4
P	**Free-Machining Steel** 1118, 1215, 12L14, etc.	100 - 150	HSS	200	280	260	325	0.007	0.010	0.013	0.016	0.020	0.023
		150 - 200	HSS	180	260	235	300	0.007	0.010	0.013	0.016	0.020	0.023
		200 - 250	HSS	160	240	210	280	0.006	0.010	0.013	0.016	0.020	0.023
	Low-Carbon Steel 1010, 1020, 1025, 1522, 1144, etc.	85 - 125	HSS	170	250	220	290	0.006 ❖	0.009	0.012	0.015	0.019	0.023
		125 - 175	HSS	160	240	210	275	0.006 ❖	0.009	0.012	0.015	0.019	0.023
		175 - 225	HSS	150	225	195	260	0.005 ❖	0.008	0.010	0.014	0.018	0.021
		225 - 275	HSS	140	210	180	240	0.005 ❖	0.008	0.010	0.014	0.018	0.021
	Medium-Carbon Steel 1030, 1040, 1050, 1527, 1140, 1151, etc.	125 - 175	HSS	160	240	210	275	0.006	0.009	0.012	0.015	0.019	0.023
		175 - 225	HSS	150	225	195	260	0.005	0.008	0.010	0.014	0.018	0.021
		225 - 275	HSS	140	210	180	240	0.005	0.008	0.010	0.014	0.018	0.021
		275 - 325	SC	130	195	170	225	0.004	0.007	0.009	0.012	0.016	0.019
	Alloy Steel 4140, 5140, 8640, etc.	125 - 175	HSS	150	210	195	240	0.006	0.008	0.010	0.014	0.017	0.019
		175 - 225	HSS	140	195	180	225	0.005	0.008	0.010	0.014	0.017	0.019
		225 - 275	HSS	130	180	170	210	0.005	0.007	0.010	0.014	0.017	0.019
		275 - 325	SC	120	170	155	195	0.004	0.006	0.009	0.012	0.015	0.017
		325 - 375	SC	110	155	145	180	0.003	0.006	0.009	0.012	0.015	0.017
	High-Strength Alloy 4340, 4330V, 300M, etc.	225 - 300	SC	80	110	100	125	0.005 ❖	0.007	0.009	0.010	0.014	0.017
		300 - 350	SC	60	85	80	100	0.004 ❖	0.007	0.009	0.010	0.014	0.017
		350 - 400	SC	50	70	65	80	0.003 ❖	0.006	0.008	0.009	0.012	0.015
	Structural Steel A36, A285, A516, etc.	100 - 150	HSS	140	200	180	235	0.006 ❖	0.010	0.012	0.014	0.018	0.021
		150 - 250	HSS	120	170	155	190	0.005 ❖	0.009	0.010	0.012	0.016	0.019
		250 - 350	SC	100	140	130	160	0.004 ❖	0.009	0.009	0.010	0.014	0.017
	Tool Steel H-13, H-21, A-4, 0-2, S-3, etc.	150 - 200	SC	80	110	105	125	0.004 ❖	0.006	0.008	0.010	0.014	0.015
		200 - 250	SC	60	90	85	105	0.004 ❖	0.006	0.008	0.010	0.012	0.015
S	**High-Temp Alloy** Hastelloy B, Inconel 600, etc.	140 - 220	SC	30	40	35	45	0.003 ❖	0.007	0.008	0.010	0.012	0.015
		220 - 310	SC	25	35	30	40	0.003 ❖	0.006	0.007	0.008	0.010	0.012
M	**Stainless Steel 400 Series** 416, 420, etc.	185 - 275	SC	75	105	95	110	0.006 ❖	0.008	0.009	0.011	0.012	0.016
		275 - 350	SC	60	90	80	100	0.005 ❖	0.007	0.008	0.010	0.012	0.014
K	**Nodular, Grey, Ductile Cast Iron**	120 - 150	HSS	170	250	220	290	0.007	0.012	0.016	0.020	0.024	0.027
		150 - 200	HSS	150	225	195	260	0.006	0.011	0.014	0.018	0.022	0.025
		200 - 220	HSS	130	195	170	225	0.006	0.009	0.012	0.016	0.018	0.021
		220 - 260	SC	110	165	145	190	0.005	0.007	0.009	0.012	0.014	0.017
		260 - 320	SC	90	135	120	155	0.004	0.006	0.007	0.009	0.012	0.014
N	**Aluminum**	30	HSS	600	850	750	–	0.008	0.013	0.016	0.020	0.022	0.025
		180	HSS	300	450	400	–	0.008	0.013	0.016	0.018	0.022	0.025

Formulas

1. **RPM = (3.82 • SFM) / DIA**

where:
RPM = revolutions per minute (rev/min)
SFM = speed (ft/min)
DIA = finish diameter of drill (inch)

2. **SFM = RPM • 0.262 • DIA**

where:
SFM = speed (ft/min)
RPM = revolutions per minute (rev/min)
DIA = diameter of drill (inch)

3. **IPM = RPM • IPR**

where:
IPM = Feed rate
RPM = revolutions per minute (rev/min)
IPR = feed rate (in/rev)

The table and equations on this page are found in the *Machinery's Handbook*. Permission to simplify and print the equations is granted by the Editor of the *Machinery's Handbook*.

IMPORTANT: The speeds and feeds listed above are a general starting point for all applications. Refer to the Coolant Recommendation charts for coolant requirements to run at the recommended speeds and feeds. Factory technical assistance is also available through our Application Engineering Team. *ext:* **7611** | *email:* **appeng@alliedmachine.com**
Due to potential chip formation issues, contact our Application Engineering Team for assistance machining materials marked with a ❖.

Coolant Recommendations | Imperial (inch)

HSS

ISO	Material	Pressure / Flow Rate	Tube No. 4 - 5 T-A Series Y - Z	Tube No. 6 - 8 T-A Series 0	Tube No. 10 T-A Series 1	Tube No. 12 - 16 T-A Series 2	Tube No. 20 - 24 T-A Series 3	Tube No. 32 T-A Series 4
P	**Free-Machining Steel**	PSI	175 - 185	100 - 120	105 - 140	80 - 115	75 - 100	40 - 50
	1118, 1215, 12L14, etc.	GPM	2.5 - 2.6	2.8 - 3.0	4.4 - 5.2	7 - 8	12 - 14	30 - 33
	Low-Carbon Steel	PSI	165 - 170	75 - 90	75 - 95	60 - 80	55 - 75	30 - 40
	1010, 1020, 1025, 1522, 1144, etc.	GPM	2.4 - 2.5	2.4 - 2.6	3.7 - 4.2	6 - 7	11 - 12	26 - 30
	Medium-Carbon Steel	PSI	160 - 165	70 - 85	70 - 90	55 - 75	50 - 70	30 - 40
	1030, 1040, 1050, 1527, 1140, 1151, etc.	GPM	2.3 - 2.4	2.3 - 2.6	3.7 - 4.2	5 - 6	10 - 12	26 - 30
	Alloy Steel	PSI	160 - 165	65 - 75	65 - 80	50 - 70	45 - 60	30 - 35
	4140, 5140, 8640, etc.	GPM	2.3 - 2.4	2.2 - 2.4	3.5 - 3.9	5 - 6	10 - 11	26 - 28
	High-Strength Alloy	PSI	150 - 155	55 - 60	45 - 50	25 - 30	25 - 30	20 - 25
	4340, 4330V, 300M, etc.	GPM	2.3 - 2.4	2.1 - 2.2	2.9 - 3.1	4 - 5	7 - 8	21 - 23
	Structural Steel	PSI	160 - 165	75 - 85	65 - 80	40 - 55	40 - 50	25 - 30
	A36, A285, A516, etc.	GPM	2.3 - 2.4	2.4 - 2.6	3.5 - 3.9	5 - 6	9 - 10	23 - 26
	Tool Steel	PSI	150 - 155	55 - 60	45 - 50	25 - 30	25 - 30	20 - 25
	H-13, H-21, A-4, 0-2, S-3, etc.	GPM	2.3 - 2.4	2.1 - 2.2	2.9 - 3.1	4 - 5	7 - 8	21 - 23
S	**High-Temp Alloy**	PSI	150 - 155	60 - 65	50 - 55	30 - 35	25 - 30	25 - 30
	Hastelloy B, Inconel 600, etc.	GPM	2.3 - 2.4	2.2 - 2.3	3.1 - 3.2	4 - 5	7 - 8	23 - 26
M	**Stainless Steel 400 Series**	PSI	171	86	75	55	51	29
	416, 420, etc.	GPM	3	3	4	6	10	26
K	**Nodular, Grey, Ductile Cast Iron**	PSI	160	65	61	41	35	29
		GPM	2	2	3	5	9	26
N	**Aluminum**	PSI	210	180	230	159	125	51
		GPM	3	4	6	9	16	33

IMPORTANT: The coolant pressure and flow rate recommendations above represent a good approximation to obtain optimum tool life and chip evacuation at Allied's recommended speeds and feeds. If lower coolant capabilities exist in a drilling application, the AccuPort 432 Port Contour Cutter will still function at reduced penetration rates. Contact our Application Engineering Department for a more specific recommendation of coolant requirements and/or speeds and feeds. *ext:* **7611** | *email:* **appeng@alliedmachine.com**

Recommended Drilling Data | Imperial (inch)

Carbide

ISO	Material	Hardness (BHN)	Grade	Speed (SFM) TiN	Speed (SFM) TiAlN	Speed (SFM) AM200®	Feed Rate (IPR) by Tube Size and T-A® Insert Series: Tube No. 4 - 5, T-A Series Y - Z	Tube No. 6 - 8, T-A Series 0	Tube No. 10, T-A Series 1	Tube No. 12 - 16, T-A Series 2	Tube No. 20 - 24, T-A Series 3
P	**Free-Machining Steel** 1118, 1215, 12L14, etc.	100 - 150	C1, C5	320	420	480	0.008	0.012	0.015	0.018	0.021
		150 - 200	C1, C5	280	360	415	0.007	0.011	0.014	0.016	0.019
		200 - 250	C1, C5	260	340	390	0.006	0.010	0.013	0.015	0.017
	Low-Carbon Steel 1010, 1020, 1025, 1522, 1144, etc.	85 - 125	C1, C5	300	390	450	0.008 ❖	0.010	0.013	0.017	0.019
		125 - 175	C1, C5	260	340	390	0.007 ❖	0.010	0.013	0.016	0.018
		175 - 225	C1, C5	240	310	355	0.006 ❖	0.009	0.012	0.015	0.017
		225 - 275	C1, C5	210	270	310	0.005 ❖	0.009	0.012	0.015	0.017
	Medium-Carbon Steel 1030, 1040, 1050, 1527, 1140, 1151, etc.	125 - 175	C1, C5	260	340	390	0.007	0.010	0.013	0.016	0.018
		175 - 225	C1, C5	240	310	355	0.006	0.009	0.012	0.015	0.017
		225 - 275	C1, C5	210	270	310	0.006	0.009	0.012	0.015	0.017
		275 - 325	C1, C5	180	230	265	0.005	0.008	0.011	0.014	0.016
	Alloy Steel 4140, 5140, 8640, etc.	125 - 175	C1, C5	250	325	375	0.007	0.010	0.013	0.016	0.018
		175 - 225	C1, C5	230	300	345	0.006	0.009	0.012	0.015	0.017
		225 - 275	C1, C5	210	270	310	0.006	0.009	0.012	0.015	0.017
		275 - 325	C1, C5	200	250	285	0.005	0.008	0.011	0.014	0.016
		325 - 375	C1, C5	170	220	255	0.004	0.007	0.010	0.013	0.015
	High-Strength Alloy 4340, 4330V, 300M, etc.	225 - 300	C1, C5	160	200	230	0.006 ❖	0.009	0.010	0.012	0.015
		300 - 350	C1, C5	140	180	205	0.005 ❖	0.008	0.009	0.011	0.014
		350 - 400	C1, C5	120	160	185	0.004 ❖	0.007	0.008	0.010	0.012
	Structural Steel A36, A285, A516, etc.	100 - 150	C1, C5	240	310	355	0.008 ❖	0.011	0.014	0.016	0.018
		150 - 250	C1, C5	200	250	285	0.006 ❖	0.010	0.012	0.014	0.016
		250 - 350	C1, C5	180	230	265	0.005 ❖	0.009	0.011	0.012	0.014
	Tool Steel H-13, H-21, A-4, 0-2, S-3, etc.	150 - 200	C1, C5	160	220	255	0.004 ❖	0.007	0.009	0.011	0.013
		200 - 250	C1, C5	120	170	195	0.004 ❖	0.007	0.009	0.011	0.013
S	**High-Temp Alloy** Hastelloy B, Inconel 600, etc.	140 - 220	C2	80	105	120	0.004 ❖	0.007	0.009	0.011	0.013
		220 - 310	C2	60	85	95	0.004 ❖	0.006	0.008	0.010	0.012
M	**Stainless Steel 400 Series** 416, 420, etc.	185 - 275	C2	160	210	240	0.007 ❖	0.009	0.012	0.014	0.016
		275 - 350	C2	120	160	185	0.006 ❖	0.008	0.011	0.012	0.014
K	**Nodular, Grey, Ductile Cast Iron**	120 - 150	C2, C3	320	460	500	0.008	0.012	0.015	0.019	0.023
		150 - 200	C2, C3	270	400	480	0.007	0.011	0.013	0.017	0.021
		200 - 220	C2, C3	240	360	430	0.006	0.009	0.012	0.015	0.018
		220 - 260	C2, C3	210	310	370	0.005	0.008	0.011	0.013	0.015
		260 - 320	C2, C3	180	270	335	0.005	0.007	0.010	0.011	0.013
N	**Aluminum**	30	C2	1200	1500	–	0.010	0.015	0.018	0.020	0.022
		180	C2	800	1000	–	0.009	0.013	0.016	0.018	0.020

Formulas

1. **RPM = (3.82 • SFM) / DIA**
   where:
   RPM = revolutions per minute (rev/min)
   SFM = speed (ft/min)
   DIA = finish diameter of drill (inch)

2. **SFM = RPM • 0.262 • DIA**
   where:
   SFM = speed (ft/min)
   RPM = revolutions per minute (rev/min)
   DIA = diameter of drill (inch)

3. **IPM = RPM • IPR**
   where:
   IPM = Feed rate
   RPM = revolutions per minute (rev/min)
   IPR = feed rate (in/rev)

The table and equations on this page are found in the *Machinery's Handbook*. Permission to simplify and print the equations is granted by the Editor of the *Machinery's Handbook*.

IMPORTANT: The speeds and feeds listed above are a general starting point for all applications. Refer to the Coolant Recommendation charts for coolant requirements to run at the recommended speeds and feeds. Factory technical assistance is also available through our Application Engineering Team. *ext:* **7611** | *email:* **appeng@alliedmachine.com**
Due to potential chip formation issues, contact our Application Engineering Team for assistance machining materials marked with a ❖.

Coolant Recommendations | Imperial (inch)

Carbide

ISO	Material	Pressure / Flow Rate	Tube No. 4 - 5 T-A Series Y - Z	Tube No. 6 - 8 T-A Series 0	Tube No. 10 T-A Series 1	Tube No. 12 - 16 T-A Series 2	Tube No. 20 - 24 T-A Series 3
P	**Free-Machining Steel**	PSI	195	140	160	140	155
	1118, 1215, 12L14, etc.	GPM	2.6	3.3	5.5	9	18
	Low-Carbon Steel	PSI	180	105	105	110	115
	1010, 1020, 1025, 1522, 1144, etc.	GPM	2.5	2.9	4.4	8	15
	Medium-Carbon Steel	PSI	175	100	90	100	75
	1030, 1040, 1050, 1527, 1140, 1151, etc.	GPM	2.5	2.8	4.1	7	13
	Alloy Steel	PSI	165	85	100	75	70
	4140, 5140, 8640, etc.	GPM	2.4	2.6	4.3	6	12
	High-Strength Alloy	PSI	160	65	55	40	35
	4340, 4330V, 300M, etc.	GPM	2.4	2.3	3.2	5	8
	Structural Steel	PSI	175	115	105	75	70
	A36, A285, A516, etc.	GPM	2.5	3	4.4	6	12
	Tool Steel	PSI	155	60	55	40	35
	H-13, H-21, A-4, 0-2, S-3, etc.	GPM	2.4	2.2	3.2	5	8
S	**High-Temp Alloy**	PSI	150 - 155	60 - 65	50 - 55	30 - 35	25 - 30
	Hastelloy B, Inconel 600, etc.	GPM	2.3 - 2.4	2.2 - 2.3	3.1 - 3.2	4 - 5	7 - 8
M	**Stainless Steel 400 Series**	PSI	329	239	260	250	190
	416, 420, etc.	GPM	3	4	7	12	20
K	**Nodular, Grey, Ductile Cast Iron**	PSI	225	104	90	90	80
		GPM	3	3	4	7	13
N	**Aluminum**	PSI	350	319	315	284	200
		GPM	4	5	8	12	20

IMPORTANT: The coolant pressure and flow rate recommendations above represent a good approximation to obtain optimum tool life and chip evacuation at Allied's recommended speeds and feeds. If lower coolant capabilities exist in a drilling application, the AccuPort 432 Port Contour Cutter will still function at reduced penetration rates. Contact our Application Engineering Department for a more specific recommendation of coolant requirements and/or speeds and feeds. *ext:* **7611** | *email:* **appeng@alliedmachine.com**

Recommended Drilling Data | Metric (mm)

HSS

ISO	Material	Hardness (BHN)	Grade	Speed (m/min) TiN	TiAlN	TiCN	AM200®	Feed Rate (mm/rev) by Tube Size and T-A® Insert Series: Tube No. 4 - 5, T-A Series Y - Z	Tube No. 6 - 8, T-A Series 0	Tube No. 10, T-A Series 1	Tube No. 12 - 16, T-A Series 2	Tube No. 20 - 24, T-A Series 3	Tube No. 32, T-A Series 4
P	**Free-Machining Steel** 1118, 1215, 12L14, etc.	100 - 150	HSS	61	85	79	92	0.18	0.25	0.33	0.41	0.51	0.58
		150 - 200	HSS	55	79	72	87	0.18	0.25	0.33	0.41	0.51	0.58
		200 - 250	HSS	49	73	64	81	0.15	0.25	0.33	0.41	0.51	0.58
	Low-Carbon Steel 1010, 1020, 1025, 1522, 1144, etc.	85 - 125	HSS	52	76	67	84	0.15 ❖	0.23	0.30	0.38	0.48	0.58
		125 - 175	HSS	49	73	64	81	0.15 ❖	0.23	0.30	0.38	0.48	0.58
		175 - 225	HSS	46	69	59	76	0.13 ❖	0.20	0.25	0.36	0.46	0.53
		225 - 275	HSS	43	64	55	70	0.13 ❖	0.20	0.25	0.36	0.46	0.53
	Medium-Carbon Steel 1030, 1040, 1050, 1527, 1140, 1151, etc.	125 - 175	HSS	49	73	64	79	0.15	0.23	0.30	0.38	0.48	0.58
		175 - 225	HSS	46	69	59	75	0.13	0.20	0.25	0.36	0.46	0.53
		225 - 275	HSS	43	64	55	70	0.13	0.20	0.25	0.36	0.46	0.53
		275 - 325	SC	40	59	52	66	0.10	0.18	0.23	0.30	0.41	0.48
	Alloy Steel 4140, 5140, 8640, etc.	125 - 175	HSS	46	64	59	69	0.15	0.20	0.25	0.36	0.43	0.48
		175 - 225	HSS	43	59	55	66	0.13	0.20	0.25	0.36	0.43	0.48
		225 - 275	HSS	40	55	52	60	0.13	0.18	0.25	0.36	0.43	0.48
		275 - 325	SC	37	52	47	56	0.10	0.15	0.23	0.30	0.38	0.43
		325 - 375	SC	34	47	44	55	0.08	0.15	0.23	0.30	0.38	0.43
	High-Strength Alloy 4340, 4330V, 300M, etc.	225 - 300	SC	24	34	30	37	0.13 ❖	0.18	0.23	0.25	0.36	0.43
		300 - 350	SC	18	26	24	27	0.10 ❖	0.18	0.23	0.25	0.36	0.43
		350 - 400	SC	15	21	20	23	0.08 ❖	0.15	0.20	0.23	0.30	0.38
	Structural Steel A36, A285, A516, etc.	100 - 150	HSS	43	61	55	67	0.15 ❖	0.25	0.30	0.36	0.46	0.53
		150 - 250	HSS	37	52	47	56	0.13 ❖	0.23	0.25	0.30	0.41	0.48
		250 - 350	SC	30	43	40	47	0.10 ❖	0.20	0.23	0.25	0.36	0.43
	Tool Steel H-13, H-21, A-4, 0-2, S-3, etc.	150 - 200	SC	24	34	32	37	0.10	0.15	0.20	0.25	0.30	0.38
		200 - 250	SC	18	27	26	31	0.10	0.15	0.20	0.25	0.30	0.38
S	**High-Temp Alloy** Hastelloy B, Inconel 600, etc.	140 - 220	SC	30	40	35	45	0.08 ❖	0.18	0.20	0.25	0.30	0.38
		220 - 310	SC	25	35	30	40	0.08 ❖	0.15	0.18	0.20	0.25	0.30
M	**Stainless Steel 400 Series** 416, 420, etc.	185 - 275	SC	23	32	29	33	0.15 ❖	0.20	0.23	0.28	0.36	0.41
		275 - 350	SC	18	27	24	29	0.13 ❖	0.18	0.20	0.25	0.30	0.36
K	**Nodular, Grey, Ductile Cast Iron**	120 - 150	HSS	52	76	67	82	0.18	0.30	0.41	0.51	0.61	0.69
		150 - 200	HSS	46	69	59	75	0.15	0.28	0.36	0.46	0.56	0.64
		200 - 220	HSS	40	59	52	66	0.15	0.23	0.30	0.41	0.46	0.53
		220 - 260	SC	34	50	44	55	0.13	0.18	0.23	0.30	0.36	0.43
		260 - 320	SC	27	41	37	44	0.10	0.15	0.18	0.23	0.30	0.36
N	**Aluminum**	30	HSS	183	259	229	–	0.20	0.33	0.41	0.51	0.56	0.64
		180	HSS	91	137	122	–	0.20	0.33	0.41	0.46	0.56	0.64

Formulas

1. **RPM = (318.47 • m/min) / DIA**
   where:
   RPM = revolutions per minute (rev/min)
   m/min = speed (m/min)
   DIA = finish diameter of drill (mm)

2. **m/min = RPM • 0.003 • DIA**
   where:
   m/min = speed (m/min)
   RPM = revolutions per minute (rev/min)
   DIA = diameter of drill (mm)

3. **IPM = RPM • mm/rev**
   where:
   IPM = feed rate
   RPM = revolutions per minute (rev/min)
   mm/rev = feed rate (mm/rev)

The table and equations on this page are found in the *Machinery's Handbook*. Permission to simplify and print the equations is granted by the Editor of the *Machinery's Handbook*.

IMPORTANT: The speeds and feeds listed above are a general starting point for all applications. Refer to the Coolant Recommendation charts for coolant requirements to run at the recommended speeds and feeds. Factory technical assistance is also available through our Application Engineering Team. *ext:* **7611** | *email:* **appeng@alliedmachine.com**
Due to potential chip formation issues, contact our Application Engineering Team for assistance machining materials marked with a ❖.

Coolant Recommendations | Metric (mm)

HSS

ISO	Material	Pressure / Flow Rate	Tube No. 4 - 5 T-A Series Y - Z	Tube No. 6 - 8 T-A Series 0	Tube No. 10 T-A Series 1	Tube No. 12 - 16 T-A Series 2	Tube No. 20 - 24 T-A Series 3	Tube No. 32 T-A Series 4
P	**Free-Machining Steel**	BAR	12 - 13	7 - 8	7 - 10	6 - 8	6 - 7	3 - 4
	1118, 1215, 12L14, etc.	LPM	9.5 - 9.8	10.6 - 11.4	16.7 - 19.7	26.5 - 30.3	45.4 - 53.0	114 - 125
	Low-Carbon Steel	BAR	11 - 12	5 - 6	5 - 7	4 - 6	4 - 5	2 - 3
	1010, 1020, 1025, 1522, 1144, etc.	LPM	9.1 - 9.5	9.1 - 9.8	14.0 - 15.9	22.7 - 26.5	41.6 - 45.4	98 - 114
	Medium-Carbon Steel	BAR	11	5 - 6	5 - 6	4 - 5	3 - 5	2 - 3
	1030, 1040, 1050, 1527, 1140, 1151, etc.	LPM	8.7 - 9.1	8.7 - 9.8	13.6 - 15.5	18.9 - 22.7	37.9 - 45.4	98 - 114
	Alloy Steel	BAR	11	5 - 6	5	3 - 5	3 - 4	2
	4140, 5140, 8640, etc.	LPM	8.7 - 9.1	13.2 - 14.8	8.3 - 9.1	18.9 - 22.7	34.1 - 37.9	87 - 98
	High-Strength Alloy	BAR	10 - 11	4 - 5	3 - 4	2	2	2
	4340, 4330V, 300M, etc.	LPM	8.7 - 9.1	7.9 - 8.3	11.0 - 11.7	15.1 - 18.9	26.5 - 30.3	79 - 87
	Structural Steel	BAR	11	5 - 6	5 - 6	3 - 4	3	2
	A36, A285, A516, etc.	LPM	8.7 - 9.1	9.1 - 9.8	13.2 - 14.8	18.9 - 22.7	34.1 - 37.9	87 - 98
	Tool Steel	BAR	4	10 - 11	3	2	2	1 - 2
	H-13, H-21, A-4, 0-2, S-3, etc.	LPM	7.9 - 8.3	8.7 - 9.1	11.0 - 11.7	15.1 - 18.9	26.5 - 30.3	79 - 87
S	**High-Temp Alloy**	BAR	10 - 11	4 - 5	3 - 4	2	2	2
	Hastelloy B, Inconel 600, etc.	LPM	8.7 - 9.1	8.3 - 8.7	11.7 - 12.1	15.1 - 18.9	26.5 - 30.3	87 - 98
M	**Stainless Steel 400 Series**	BAR	11.4 - 11.7	4.8 - 5.8	4.5 - 5.2	2.7 - 3.8	2.7 - 3.4	1.7 - 2
	416, 420, etc.	LPM	9.1 - 9.5	8.7 - 9.8	13.2 - 14	18.9 - 22.7	34.1 - 37.9	87 - 98
K	**Nodular, Grey, Ductile Cast Iron**	BAR	10.7 - 11.0	4.1 - 4.5	3.4 - 4.1	2 - 2.7	2 - 2.4	1.7 - 2
		LPM	8.7 - 9.1	8.3 - 8.7	11.7 - 12.5	15.1 - 18.9	30.3 - 34.1	87 - 98
N	**Aluminum**	BAR	13.1 - 14.5	9.6 - 12.4	10.3 - 15.8	7.9 - 11	6.2 - 8.6	2.7 - 3.4
		LPM	9.8 - 10.2	12.5 - 14	20.1 - 23.1	30.3 - 34.1	53 - 60.6	114 - 125

IMPORTANT: The coolant pressure and flow rate recommendations above represent a good approximation to obtain optimum tool life and chip evacuation at Allied's recommended speeds and feeds. If lower coolant capabilities exist in a drilling application, the AccuPort 432 Port Contour Cutter will still function at reduced penetration rates. Contact our Application Engineering Department for a more specific recommendation of coolant requirements and/or speeds and feeds. *ext:* **7611** | *email:* **appeng@alliedmachine.com**

Recommended Drilling Data | Metric (mm)

Carbide

ISO	Material	Hardness (BHN)	Grade	Speed (m/min) TiN	TiAlN	AM200®	Feed Rate (mm/rev) by Tube Size and T-A® Insert Series: Tube No. 4 - 5, T-A Series Y - Z	Tube No. 6 - 8, T-A Series 0	Tube No. 10, T-A Series 1	Tube No. 12 - 16, T-A Series 2	Tube No. 20 - 24, T-A Series 3
P	**Free-Machining Steel** 1118, 1215, 12L14, etc.	100 - 150	C1, C5	98	128	146	0.020	0.30	0.38	0.46	0.53
		150 - 200	C1, C5	85	110	126	0.18	0.28	0.36	0.41	0.48
		200 - 250	C1, C5	79	104	119	0.15	0.25	0.33	0.38	0.43
	Low-Carbon Steel 1010, 1020, 1025, 1522, 1144, etc.	85 - 125	C1, C5	91	119	137	0.20 ❖	0.25	0.33	0.43	0.48
		125 - 175	C1, C5	79	104	119	0.18 ❖	0.25	0.33	0.41	0.46
		175 - 225	C1, C5	73	94	108	0.15 ❖	0.23	0.30	0.38	0.43
		225 - 275	C1, C5	64	82	94	0.13 ❖	0.23	0.30	0.38	0.43
	Medium-Carbon Steel 1030, 1040, 1050, 1527, 1140, 1151, etc.	125 - 175	C1, C5	79	104	119	0.18	0.25	0.33	0.41	0.46
		175 - 225	C1, C5	73	94	108	0.15	0.23	0.30	0.38	0.43
		225 - 275	C1, C5	64	82	94	0.15	0.23	0.30	0.38	0.43
		275 - 325	C1, C5	55	70	81	0.13	0.20	0.28	0.36	0.41
	Alloy Steel 4140, 5140, 8640, etc.	125 - 175	C1, C5	76	99	114	0.18	0.25	0.33	0.41	0.46
		175 - 225	C1, C5	70	91	105	0.15	0.23	0.30	0.38	0.43
		225 - 275	C1, C5	64	82	94	0.15	0.23	0.30	0.38	0.43
		275 - 325	C1, C5	61	76	87	0.13	0.20	0.28	0.36	0.41
		325 - 375	C1, C5	52	67	78	0.10	0.18	0.25	0.33	0.38
	High-Strength Alloy 4340, 4330V, 300M, etc.	225 - 300	C1, C5	49	61	73	0.15 ❖	0.23	0.25	0.30	0.38
		300 - 350	C1, C5	43	55	62	0.13 ❖	0.20	0.23	0.28	0.36
		350 - 400	C1, C5	37	49	56	0.10 ❖	0.18	0.20	0.25	0.30
	Structural Steel A36, A285, A516, etc.	100 - 150	C1, C5	73	94	108	0.20 ❖	0.28	0.36	0.41	0.46
		150 - 250	C1, C5	61	76	87	0.15 ❖	0.25	0.30	0.36	0.41
		250 - 350	C1, C5	55	70	81	0.13 ❖	0.23	0.28	0.30	0.36
	Tool Steel H-13, H-21, A-4, 0-2, S-3, etc.	150 - 200	C1, C5	49	67	78	0.10 ❖	0.18	0.23	0.28	0.33
		200 - 250	C1, C5	37	52	59	0.10 ❖	0.18	0.23	0.28	0.33
S	**High-Temp Alloy** Hastelloy B, Inconel 600, etc.	140 - 220	C2	24	32	36	0.10 ❖	0.18	0.23	0.28	0.33
		220 - 310	C2	18	26	29	0.10 ❖	0.15	0.20	0.25	0.30
M	**Stainless Steel 400 Series** 416, 420, etc.	185 - 275	C2	49	64	73	0.18 ❖	0.23	0.30	0.36	0.41
		275 - 350	C2	37	49	46	0.15 ❖	0.20	0.28	0.30	0.36
K	**Nodular, Grey, Ductile Cast Iron**	120 - 150	C2, C3	98	140	152	0.20	0.30	0.38	0.48	0.58
		150 - 200	C2, C3	82	122	146	0.18	0.28	0.33	0.43	0.53
		200 - 220	C2, C3	73	110	131	0.15	0.23	0.30	0.38	0.46
		220 - 260	C2, C3	64	94	113	0.13	0.20	0.28	0.33	0.38
		260 - 320	C2, C3	55	82	102	0.13	0.18	0.25	0.28	0.33
N	**Aluminum**	30	C2	366	457	–	0.25	0.38	0.46	0.51	0.56
		180	C2	244	305	–	0.23	0.33	0.41	0.46	0.51

Formulas

1. **RPM = (318.47 • m/min) / DIA**

where:
RPM = revolutions per minute (rev/min)
m/min = speed (m/min)
DIA = finish diameter of drill (mm)

2. **m/min = RPM • 0.003 • DIA**

where:
m/min = speed (m/min)
RPM = revolutions per minute (rev/min)
DIA = diameter of drill (mm)

3. **IPM = RPM • mm/rev**

where:
IPM = feed rate
RPM = revolutions per minute (rev/min)
mm/rev = feed rate (mm/rev)

The table and equations on this page are found in the *Machinery's Handbook*. Permission to simplify and print the equations is granted by the Editor of the *Machinery's Handbook*.

IMPORTANT: The speeds and feeds listed above are a general starting point for all applications. Refer to the Coolant Recommendation charts for coolant requirements to run at the recommended speeds and feeds. Factory technical assistance is also available through our Application Engineering Team. *ext:* **7611** | *email:* **appeng@alliedmachine.com**
Due to potential chip formation issues, contact our Application Engineering Team for assistance machining materials marked with a ❖.

Coolant Recommendations | Metric (mm)

Carbide

ISO	Material	Pressure / Flow Rate	Tube No. 4 - 5 T-A Series Y - Z	Tube No. 6 - 8 T-A Series 0	Tube No. 10 T-A Series 1	Tube No. 12 - 16 T-A Series 2	Tube No. 20 - 24 T-A Series 3
P	**Free-Machining Steel**	BAR	20	16	17	15	12
	1118, 1215, 12L14, etc.	LPM	12.2	16.3	25.3	41.5	71.9
	Low-Carbon Steel	BAR	11.4	13.3	20.6	36.5	62
	1010, 1020, 1025, 1522, 1144, etc.	LPM	17	10	10	10	8
	Medium-Carbon Steel	BAR	17	9	10	8	7
	1030, 1040, 1050, 1527, 1140, 1151, etc.	LPM	11.1	12.3	19.3	30	55.8
	Alloy Steel	BAR	10.4	9.1	12.6	18.8	33.6
	4140, 5140, 8640, etc.	LPM	16	9	8	7	5
	High-Strength Alloy	BAR	15	5	5	3	3
	4340, 4330V, 300M, etc.	LPM	10.4	9.1	13.6	19.7	36.5
	Structural Steel	BAR	16	9	8	7	5
	A36, A285, A516, etc.	LPM	10.8	12	17.5	27.8	47.1
	Tool Steel	BAR	15	5	5	3	3
	H-13, H-21, A-4, 0-2, S-3, etc.	LPM	10.4	9.1	13.6	19.7	36.5
S	**High-Temp Alloy**	BAR	17	11.4	12.4	11	9
	Hastelloy B, Inconel 600, etc.	LPM	11.1	13.5	21.9	35.4	62
M	**Stainless Steel 400 Series**	BAR	22.7	16.5	17.9	17.2	13.1
	416, 420, etc.	LPM	13	16.3	26.3	44.2	75
K	**Nodular, Grey, Ductile Cast Iron**	BAR	15.5	7.2	6.2	6.2	5.5
		LPM	10.7	10.8	15.4	26.5	48.7
N	**Aluminum**	BAR	24.1	22	21.7	19.6	13.8
		LPM	13.4	18.8	29	47.2	77

IMPORTANT: The coolant pressure and flow rate recommendations above represent a good approximation to obtain optimum tool life and chip evacuation at Allied's recommended speeds and feeds. If lower coolant capabilities exist in a drilling application, the AccuPort 432 Port Contour Cutter will still function at reduced penetration rates. Contact our Application Engineering Department for a more specific recommendation of coolant requirements and/or speeds and feeds. *ext:* **7611** | *email:* **appeng@alliedmachine.com**

SECTION

A93

BT-A Drill

BT-A Drill

BTA (STS) Deep Hole Machining System

- **Diameter Range:** 0.5110" - 1.8829" (12.98 mm - 47.82 mm)

Material Ejection with Efficiency

The BT-A drill (using the single tube system or STS) conquers deep hole applications in ways other drills simply cannot. The internal ejection system flushes chips and debris from the hole with no interference to the cutting process.

By utilizing the countless advantages of the T-A® drill insert, the BT-A design significantly increases penetration rates over brazed heads and traditional gun drills. A specific BT geometry has also been developed to increase productivity in these types of drilling applications.

Excellent hole size and finish.	Optimizes chip evacuation.	Up to **2x** the penetration rate of traditional BTA heads.

Applicable Industries

Aerospace | Agriculture | Automotive | Heavy Equipment | Hydraulics | Tool, Mold, and Die | Oil & Gas

Your safety and the safety of others is very important. This catalog contains important safety messages. Always read and follow all safety precautions.

This triangle is a safety hazard symbol. It alerts you to potential safety hazards that can cause tool failure and serious injury.

When you see this symbol in the catalog, look for a related safety message that may be near this triangle or referred to in the nearby text.

There are safety signal words also used in the catalog. Safety messages follow these words.

WARNING

WARNING (shown above) means that failure to follow the precautions in this message could result in tool failure and serious injury.

NOTICE means that failure to follow the precautions in this message could result in damage to the tool or machine but not result in personal injury.

NOTE and **IMPORTANT** are also used. These are important that you read and follow but are not safety-related.

Visit www.alliedmachine.com for the most up-to-date information and procedures.

Reference Icons
The following icons will appear throughout the catalog to help you navigate between products.

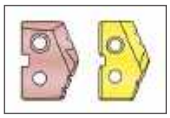

T-A® Inserts
Refers to the range of inserts that connect with the corresponding holders

Series	Diameter Range	
	Imperial (inch)	Metric (mm)
0	0.5110 - 0.6959	12.98 - 17.67
1	0.6900 - 0.9609	17.53 - 24.40
2	0.9610 - 1.3809	24.41 - 35.06
3	1.3530 - 1.8829	34.37 - 47.82

BT-A Drilling System Contents

Introduction Information

System Overview 2
Product Nomenclature 3

T-A Drill Series

0 Series 4
1 Series 5
2 Series 6
3 Series 7

System Overview

BTA Machining

BTA machining is the reverse of typical gun drilling systems. The BT-A drill is a drill head consisting of a holder body and a replaceable tip T-A® insert. The drill head threads into an STS (single tube system) cylindrical tube with a diameter smaller than the drill head. The difference in diameter forms an annular area between the hole and the tube OD. This allows high-volume coolant to be directed to the cutting edge.

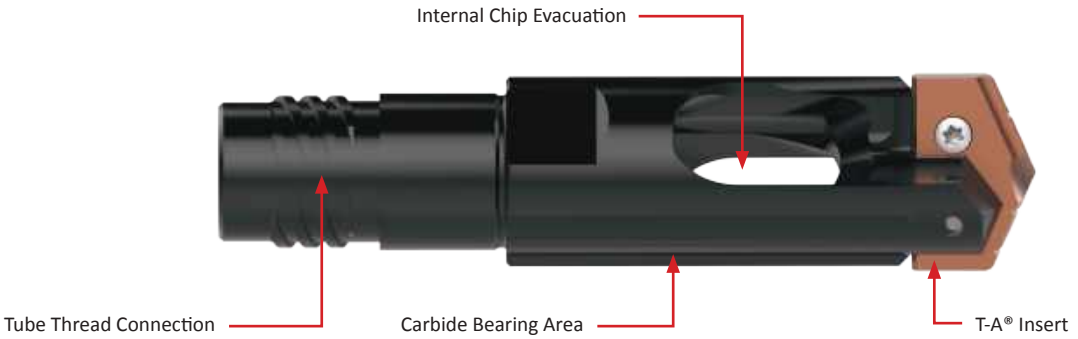

T-A Insert: BT-A Geometry (-BT)

- Low thrust web geometry reduces Z-axis requirements.
- Lip geometry idendtical to the tiny chip (-TC) for improved chip formation.
- Polished cutting surface eliminates material buildup.

- ***Improve hole straightness***
  with the laser clad bearing area
- ***Eliminate the need for resharpening***
  with replaceable cutting edges
- ***Reduce your inventory***
  with the replaceable T-A® feature
- ***Compatibility***
  heads are compatible with standard BTA-STS systems
- ***Balanced cutting forces***
- ***Patented design***

BT-A Single Tube System

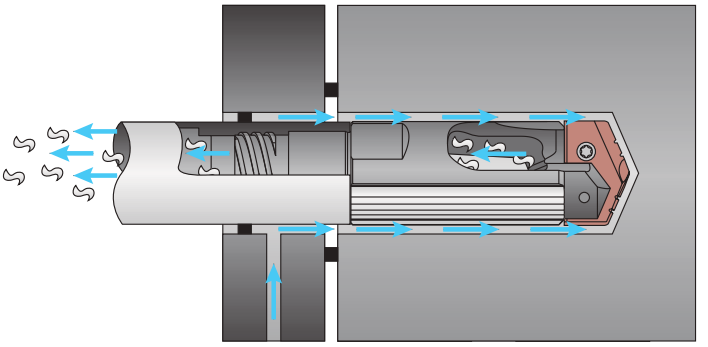

2x ***INCREASE*** in penetration rates over traditional BTA heads

BT-A Double Tube (Ejector) System (Quoted Special)

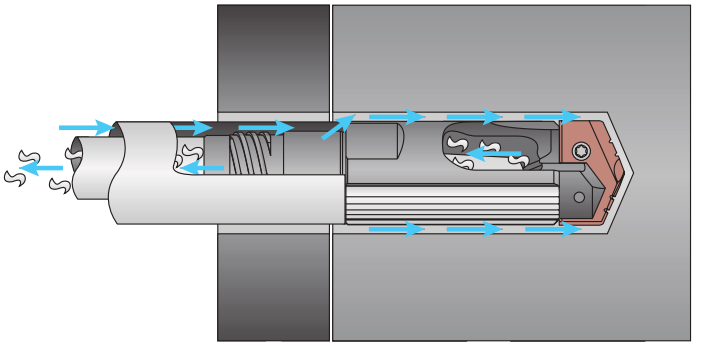

Product Nomenclature

BT-A Drill Holders

BTA2	804	–	1.1299
1	2		3

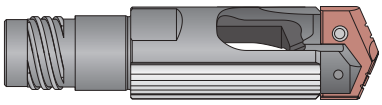

1. BT-A Drill T-A® Insert Series
BTA0 = 0 series T-A insert
BTA1 = 1 series T-A insert
BTA2 = 2 series T-A insert
BTA3 = 3 series T-A insert

2. Tube Size		
794	**800**	**806**
795	**801**	**807**
796	**802**	**808**
797	**803**	**809**
798	**804**	**810**
799	**805**	**811**

3. Diameter
0.7344 = Inch
25.00 = Metric

Reference Key

Symbol	Attribute
D_1	Drill insert range
L_1	Overall length
L_3	Holder reference length
L_7	Shank length

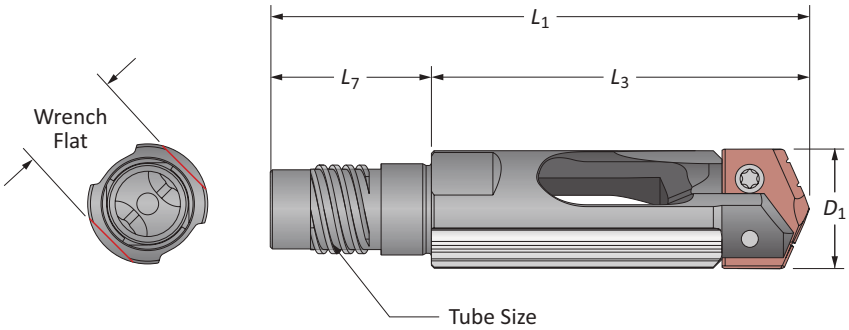

BT-A Drill Tubes

BTAT	–	804	–	63
1		2		3

1. BT-A Drill T-A Insert Series
BTAT = BT-A Tube

2. Tube Size		
794	**800**	**806**
795	**801**	**807**
796	**802**	**808**
797	**803**	**809**
798	**804**	**810**
799	**805**	**811**

3. Length
63 = Standard
102 = Long

Reference Key

Symbol	Attribute
D_1	Body diameter
ID_1	Internal diameter
L_1	Overall length

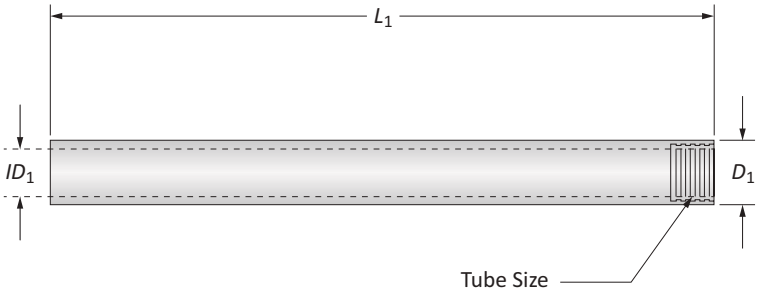

BT-A Drill Holders

0 Series | Diameter Range: 0.5110" - 0.6959" (12.98 mm - 17.67 mm)

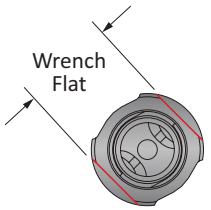

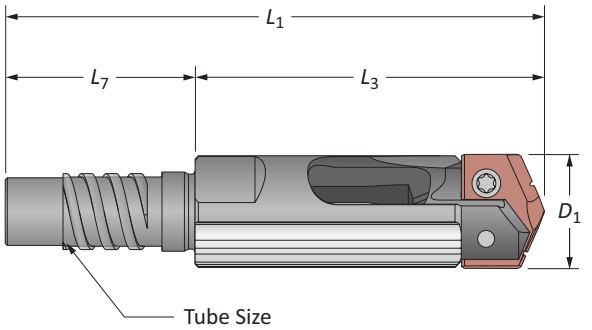

	Tube Size	D_1	Holder L_3	Holder L_1	Holder L_7	Part No.	T-A® Insert	Wrench Flat (mm)
i	794	0.5110 - 0.5359	1-45/64	2-39/64	29/32	**BTA0-794-X.XXXX**	1C10H-XXXX-BT	11
	795	0.5360 - 0.5759	1-3/4	2-21/32	29/32	**BTA0-795-X.XXXX**	1C10H-XXXX-BT	12
	796	0.5760 - 0.6149	1-13/16	2-3/4	61/64	**BTA0-796-X.XXXX**	1C10H-XXXX-BT	13
	797	0.6150 - 0.6579	1-13/16	2-3/4	61/64	**BTA0-797-X.XXXX**	1C10H-XXXX-BT	14
	798	0.6580 - 0.6959	1-25/32	2-47/64	61/64	**BTA0-798-X.XXXX**	1C10H-XXXX-BT	15
m	794	12.98 - 13.61	43.4	66.4	23	**BTA0-794-XX.XX**	1C10H-XXXX-BT	11
	795	13.62 - 14.63	44.6	67.6	23	**BTA0-795-XX.XX**	1C10H-XXXX-BT	12
	796	14.64 - 15.62	45.9	69.9	24	**BTA0-796-XX.XX**	1C10H-XXXX-BT	13
	797	15.63 - 16.71	45.9	69.9	24	**BTA0-797-XX.XX**	1C10H-XXXX-BT	14
	798	16.72 - 17.67	45.3	69.3	24	**BTA0-798-XX.XX**	1C10H-XXXX-BT	15

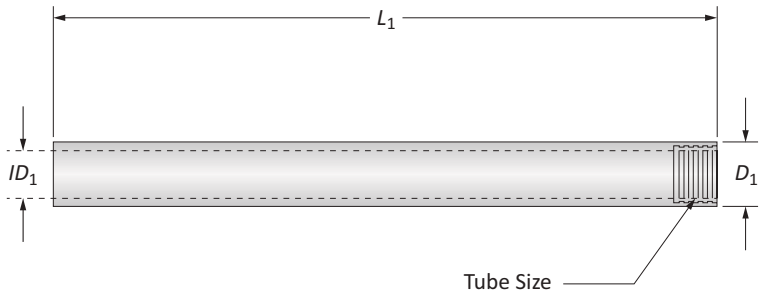

	Tube Size	Tube D_1	Tube ID_1	Tube L_1	Part No.
i	794	0.433	0.276	63	**BTAT794-63**
	794	0.433	0.276	102	**BTAT794-102**
	795	0.472	0.315	63	**BTAT795-63**
	795	0.472	0.315	102	**BTAT795-102**
	796	0.512	0.335	63	**BTAT796-63**
	796	0.512	0.335	102	**BTAT796-102**
	797	0.551	0.354	63	**BTAT797-63**
	797	0.551	0.354	102	**BTAT797-102**
	798	0.591	0.394	63	**BTAT798-63**
	798	0.591	0.394	102	**BTAT798-102**

Section A30

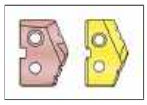

Key on A93: 1

i = Imperial (in)
m = Metric (mm)

BT-A Drill Holders

1 Series | Diameter Range: 0.6900" - 0.9609" (17.53 mm - 24.40 mm)

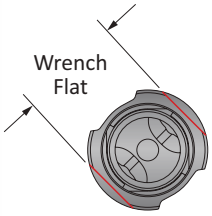

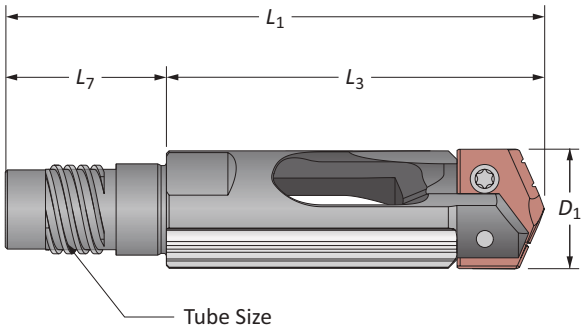

	Tube Size	D_1	Holder L_3	Holder L_1	Holder L_7	Part No.	T-A® Insert	Wrench Flat (mm)
i	799	0.6900 - 0.7449	2-15/64	3-9/32	63/64	**BTA1-799-X.XXXX**	1C11H-XXXX-BT	16
	800	0.7450 - 0.7879	2-5/16	3-27/64	1-7/64	**BTA1-800-X.XXXX**	1C11H-XXXX-BT	17
	801	0.7880 - 0.8589	2-11/32	3-35/64	1-13/64	**BTA1-801-X.XXXX**	1C11H-XXXX-BT	18
	802	0.8590 - 0.9489	2-25/64	3-11/16	1-19/64	**BTA1-802-X.XXXX**	1C11H-XXXX-BT	19
	803	0.9490 - 0.9609	2-33/64	3-13/16	1-19/64	**BTA1-803-X.XXXX**	1C11H-XXXX-BT	21
m	799	17.53 - 18.92	58.2	83.2	25	**BTA1-799-XX.XX**	1C11H-XXXX-BT	16
	800	18.93 - 20.01	58.8	86.8	28	**BTA1-800-XX.XX**	1C11H-XXXX-BT	17
	801	20.02 - 21.81	59.4	89.9	30.5	**BTA1-801-XX.XX**	1C11H-XXXX-BT	18
	802	21.82 - 24.10	60.7	93.7	33	**BTA1-802-XX.XX**	1C11H-XXXX-BT	19
	803	24.11 - 24.40	63.9	96.9	33	**BTA1-803-XX.XX**	1C11H-XXXX-BT	21

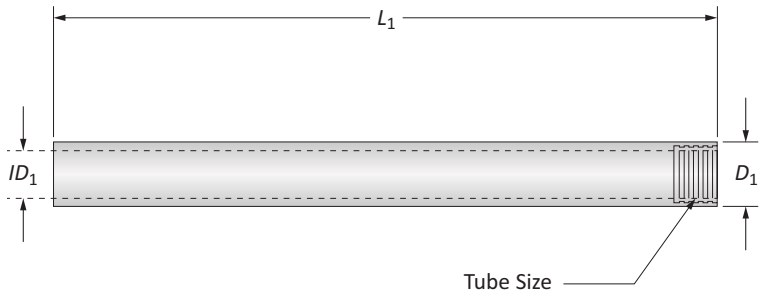

	Tube Size	Tube D_1	Tube ID_1	Tube L_1	Part No.
i	799	0.630	0.413	63	**BTAT799-63**
	799	0.630	0.413	102	**BTAT799-102**
	800	0.669	0.453	63	**BTAT800-63**
	800	0.669	0.453	102	**BTAT800-102**
	801	0.709	0.472	63	**BTAT801-63**
	801	0.709	0.472	102	**BTAT801-102**
	802	0.787	0.512	63	**BTAT802-63**
	802	0.787	0.512	102	**BTAT802-102**
	803	0.866	0.551	63	**BTAT803-63**
	803	0.866	0.551	102	**BTAT803-102**

Section A30

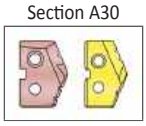

Key on A93: 1

i = Imperial (in)
m = Metric (mm)

BT-A Drill Holders

2 Series | Diameter Range: 0.9610" - 1.3809" (24.41 mm - 35.06 mm)

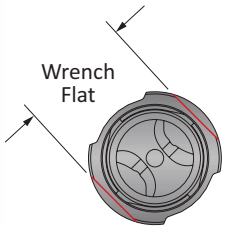

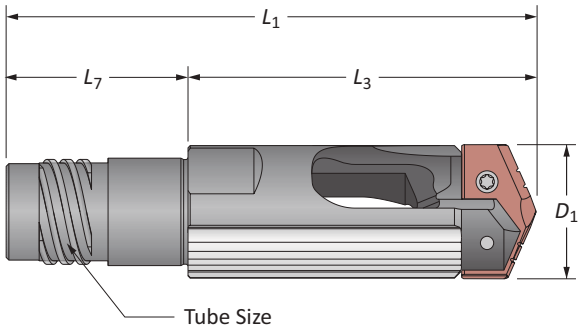

	Tube Size	D_1	Holder L_3	Holder L_1	Holder L_7	Part No.	T-A® Insert	Wrench Flat (mm)
i	803	0.9610 - 1.0399	3-3/32	4-25/64	1-19/64	**BTA2-803-X.XXXX**	1C12H-XXXX-BT	21
	804	1.0400 - 1.1299	3	4-3/32	1-7/64	**BTA2-804-X.XXXX**	1C12H-XXXX-BT	22
	805	1.1300 - 1.2209	2-31/32	4-25/64	1-27/64	**BTA2-805-X.XXXX**	1C12H-XXXX-BT	25
	806	1.2210 - 1.3119	3-1/16	4-31/64	1-27/64	**BTA2-806-X.XXXX**	1C12H-XXXX-BT	27
	807	1.3120 - 1.3809	3-1/16	4-31/64	1-27/64	**BTA2-807-X.XXXX**	1C12H-XXXX-BT	30
m	803	24.41 - 26.41	78.5	111.5	33	**BTA2-803-XX.XX**	1C12H-XXXX-BT	21
	804	26.42 - 28.70	75.9	103.9	28	**BTA2-804-XX.XX**	1C12H-XXXX-BT	22
	805	28.71 - 31.01	75.4	111.4	36	**BTA2-805-XX.XX**	1C12H-XXXX-BT	25
	806	31.02 - 33.32	77.9	113.8	36	**BTA2-806-XX.XX**	1C12H-XXXX-BT	27
	807	33.33 - 35.06	77.9	113.8	36	**BTA2-807-XX.XX**	1C12H-XXXX-BT	30

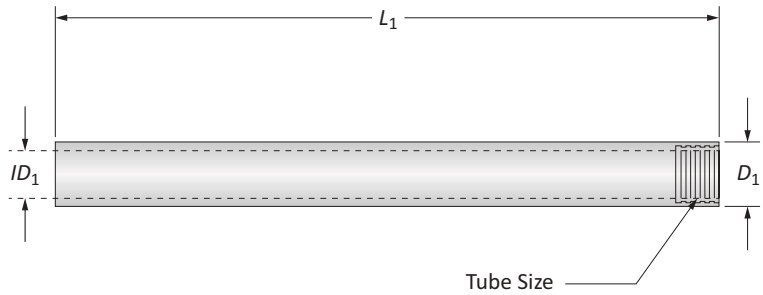

	Tube Size	Tube D_1	Tube ID_1	Tube L_1	Part No.
i	803	0.866	0.551	63	**BTAT803-63**
	803	0.866	0.551	102	**BTAT803-102**
	804	0.945	0.610	63	**BTAT804-63**
	804	0.945	0.610	102	**BTAT804-102**
	805	1.024	0.669	63	**BTAT805-63**
	805	1.024	0.669	102	**BTAT805-102**
	806	1.102	0.728	102	**BTAT806-102**
	807	1.181	0.787	102	**BTAT807-102**

Section A30

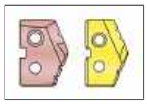

Key on A93: 1

i = Imperial (in)
m = Metric (mm)

BT-A Drill Holders

3 Series | Diameter Range: 1.3530" - 1.8829" (34.37 mm - 47.82 mm)

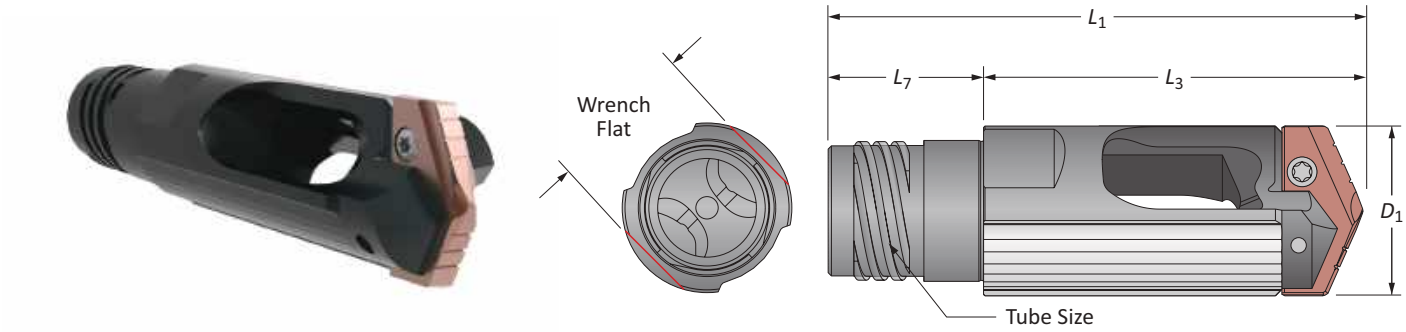

	Tube Size	D_1	Holder L_3	Holder L_1	Holder L_7	Part No.	T-A® Insert	Wrench Flat (mm)
i	807	1.3530 - 1.4259	3-13/16	5-15/64	1-27/64	**BTA3-807-X.XXXX**	1C13H-XXXX-BT	30
	808	1.4260 - 1.5599	3-15/16	5-11/16	1-3/4	**BTA3-808-X.XXXX**	1C13H-XXXX-BT	32
	809	1.5600 - 1.6929	4-1/16	5-3/4	1-11/16	**BTA3-809-X.XXXX**	1C13H-XXXX-BT	36
	810	1.6930 - 1.8509	4-1/64	5-45/64	1-11/16	**BTA3-810-X.XXXX**	1C13H-XXXX-BT	41
	811	1.8510 - 1.8829	4-1/16	5-3/4	1-11/16	**BTA3-811-X.XXXX**	1C13H-XXXX-BT	41
m	807	34.37 - 36.22	96.8	132.8	36	**BTA3-807-XX.XX**	1C13H-XXXX-BT	30
	808	36.23 - 39.62	100.0	144.4	44.5	**BTA3-808-XX.XX**	1C13H-XXXX-BT	32
	809	39.63 - 43.00	103.1	146.2	43	**BTA3-809-XX.XX**	1C13H-XXXX-BT	36
	810	43.01 - 47.01	101.9	144.9	43	**BTA3-810-XX.XX**	1C13H-XXXX-BT	41
	811	47.02 - 47.82	103.2	146.2	43	**BTA3-811-XX.XX**	1C13H-XXXX-BT	41

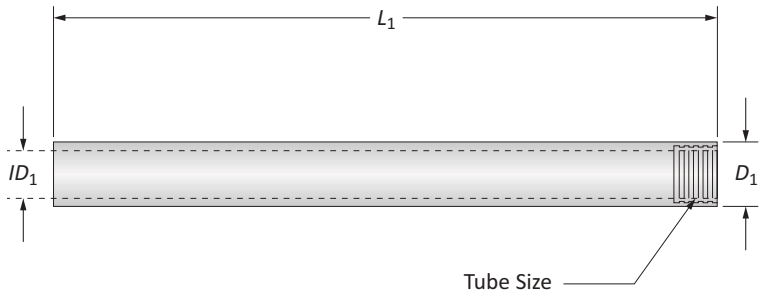

	Tube Size	Tube D_1	Tube ID_1	Tube L_1	Part No.
i	807	1.181	0.787	102	**BTAT807-102**
	808	1.299	0.906	102	**BTAT808-102**
	809	1.417	0.984	102	**BTAT809-102**
	810	1.535	1.102	102	**BTAT810-102**
	811	1.693	1.220	102	**BTAT811-102**

Section A30

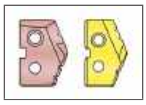

Key on A93: 1

i = Imperial (in)
m = Metric (mm)

SECTION

B10

Wohlhaupter® Overview

Wohlhaupter® High Precision Boring Systems

- **Diameter Range:** 0.016" - 128.150" (0.40 mm - 3255.00 mm)

Precision at Its Finest

From high precision to high production, Wohlhaupter has the right solution for your hole finishing applications. The Wohlhaupter product line offers the widest range of stocked boring tools and the most precise and flexible modular systems on the market. With the most reliable digital readout tools and the ability to design and build special tools, Wohlhaupter is the solution for your boring challenges.

Also available to assist your application needs is the online tool modeling software, ToolMD®. You can find your tooling, configure your system, and validate your selection all within the program. With ToolMD, you will find the right tool with just a few clicks.

Rough and finish boring	Reliable digital readouts	Precise and flexible modular system

Applicable Industries

Aerospace · Agriculture · Automotive · Firearms · General Machining · Oil & Gas · Renewable Energy

Your safety and the safety of others is very important. This catalog contains important safety messages. Always read and follow all safety precautions.

This triangle is a safety hazard symbol. It alerts you to potential safety hazards that can cause tool failure and serious injury.

When you see this symbol in the catalog, look for a related safety message that may be near this triangle or referred to in the nearby text.

There are safety signal words also used in the catalog. Safety messages follow these words.

WARNING

WARNING (shown above) means that failure to follow the precautions in this message could result in tool failure and serious injury.

NOTICE means that failure to follow the precautions in this message could result in damage to the tool or machine but not result in personal injury.

NOTE and **IMPORTANT** are also used. These are important that you read and follow but are not safety-related.

Visit www.alliedmachine.com for the most up-to-date information and procedures.

Wohlhaupter® High Precision Boring Systems Contents

Introduction Information . . . . . 2 - 3

Versatile Tooling Systems

VarioBore Versatile Fine Boring 4

PrimeBore Versatile Fine Boring 5

DigiBore Versatile Fine Boring 6

Boring Kits 7

Boring Tools

249 (248) Versatile Fine Boring 8

511 (510) Versatile Fine Boring 8

420 (410) & 465 (464) Balance 3E^{TECH+} Digital Fine Boring 9

465 (464) Balance & 365 (364) Balance Analog Fine Boring 9

565 (564) Balance Digital Fine Boring 10

320 (310) Analog Boring 10

538 (537) Analog and 3E^{TECH+} Digital Cassettes 11

Combi-Line Rough and Finish Boring 11

Twin Cutter Rough Boring Tools 12

VolCut Rough Machining Insert Holders 12

Grooving Tools and Chamfering Tools 13

Chamfering Tools 13

Wohlhaupter Inserts 14

Special Boring Tools 14

Online Tools 15

To find more information about the complete line of Wohlhaupter® High Precision Boring Systems, visit ***www.alliedmachine.com***.

Additional information may also be found in the Wohlhaupter Product Catalog.

(Literature Order Number: B10-WHL)

RUN THE GAMUT:

*from the most advanced to the toughest, we have the **solution** you need.*

- ✓ Find the perfect solution
- ✓ Decrease cost per hole
- ✓ Reduce setup times

With a complete range of boring tools from

WOHLHAUPTER®

you'll find exactly what you need to increase your productivity.

Precision Boring

Analog

Analog Balance

3E^{TECH} Digital Balance

Built-in Digital Balance

Rough and Finish Boring

Plus **many** *more*

THE
COMPLETE RANGE
∅ 0.016" - 128.15"
(∅ 0.40 mm - 3255.00 mm)

VarioBore Versatile Tooling

VARIO BORE with 3E TECH+ Universal Digital Readout Module

3E^{TECH+} Universal Digital Module

VarioBore Head

NOTE: Imperial items pictured.

NOTE: 3E^{TECH+} adjustment accuracy of 0.00005" or 0.001 mm on diameter.

NOTE: Vernier adjustment accuracy of 0.0001" or 0.002 mm on diameter.

Coolant Delivery System

Insert Holder
Ø 2.047" – 4.016"
(Ø 52.00 mm – 102.00 mm)

Outside Turning
Ø .157" – 2.598"
(Ø4.00 mm – 66.00 mm)

Serrated Tool Body

Serrated Tool Body

Carbide Boring Bar
Ø 0.394" – 0.787"
(Ø 10.00 mm – 20.00 mm)

Heavy Metal Boring Bar
Ø 0.237" – 0.394"
(Ø 6.00 mm – 10.00 mm)

Steel Boring Bar
Ø 0.236" – 1.063"
(Ø 6.00 mm – 27.00 mm)

Adapter

Reducing Sleeve

Serrated Slides

Counter Weight

Outside Turning
Ø 0.079" – 2.283"
(Ø 2.00 mm – 58.00 mm)

Insert Holder
Ø 2.677" – 5.984"
(Ø 68.00 mm – 152.00 mm)

Insert Holder
Ø 1.142" – 2.087"
(Ø 29.00 mm – 53.00 mm)

Insert Holder
Ø 0.787" – 1.260"
(Ø 20.00 mm – 32.00 mm)

Mini Boring Bar
Ø 0.118" - 0.394"
(Ø 3.00 mm - 10.00 mm)

Coated Carbide Mini Boring Bar
Ø 0.016" - 0.118"
(Ø 0.40 mm - 3.00 mm)

OPERATION **VERSATILITY**

from **0.016"** to **5.984"** (**0.40 mm** to **152.00 mm**)

plus outside turning

NOTE: Imperial items pictured.

NOTE: 3E^{TECH+} adjustment accuracy of 0.00005" or 0.001 mm on diameter.

NOTE: Vernier adjustment accuracy of 0.0001" or 0.002 mm on diameter.

PrimeBore Versatile Tooling

PRIME BORE

PrimeBore Head

Coolant Delivery System

Outside Turning
Ø 0.157" - 2.598"
(Ø 4.00 mm - 66.00 mm)

Serrated Tool Body
Ø 1.142" - 2.087"
(Ø 29.00 mm - 53.00 mm)

Serrated Tool Body
Ø 0.787" - 1.260"
(Ø 20.00 mm - 32.00 mm)

Tool Holder in Carbide
Ø 0.394" - 0.787"
(Ø 10.00 mm - 20.00 mm)

Tool Holder in Steel
Ø 0.236" - 1.063"
(Ø 6.00 mm - 27.00 mm)

Tool Holder in Heavy Metal
Ø 0.236" - 0.394"
(Ø 6.00 mm - 10.00 mm)

Adapter

Reducing Sleeve

Mini-Boring Tool
Ø 0.118" - 0.394"
(Ø 3.00 mm - 10.00 mm)

Serrated Slides
Ø 2.677" - 5.984"
(Ø 68.00 mm - 152.00 mm)

Counter Weight

Insert Holder
Ø 1.14" - 2.087"
(Ø 29.00 mm - 53.00 mm)

Outside Turning
Ø 0.157" - 2.598"
(Ø 4.00 mm - 66.00 mm)

Axial Grooving
Ø 0.236" - 8.189"

Insert Holder
Ø 2.677" - 8.189"
(Ø 68.00 mm - 208.00 mm)

Serrated Tool Body in Carbide
Ø 0.787" - 1.339"
(Ø 20.00 mm - 34.00 mm)

Serrated Tool Body in Steel
Ø 0.787" - 1.339"
(Ø 20.00mm - 34.00mm)

Tool Holder in Carbide
Ø 0.236" - 0.787"
(Ø 6.00 mm - 20.00 mm)

Tool Holder in Steel
Ø 0.236" - 0.787"
(Ø 6.00 mm - 20.00 mm)

Mini-Boring Tool Coated Carbide
Ø 0.118" - 0.256"
(Ø 0.30 mm - 6.50 mm)

Insert Holder

OPERATION **VERSATILITY**

from **0.118"** to **8.189"** (**3.00 mm** to **208.00 mm**)

plus outside turning

DigiBore Versatile Tooling

NOTE: Imperial item pictured.
NOTE: Adjustment accuracy of 0.0001" or 0.002 mm on diameter.

DIGI BORE

Coolant Delivery System

DigiBore Head

Serrated Slides

Counter Weight

Outside Turning
Ø 0.079" - 4.488"
(Ø 2.00 mm - 114.00 mm)

Axial Grooving
Ø 0" - 5.354"
(Ø 0 mm - 136.00 mm)

Insert Holder
Ø 2.677" - 8.189"
(Ø 68.00 mm - 208.00 mm)

Serrated Tool Body
Ø 1.260" - 2.677"
(Ø 32.00 mm - 68.00 mm)

Insert Holder
Ø 1.260" - 2.677"
(Ø 32.00 mm - 68.00 mm)

Serrated Tool Body
Ø 0.787" - 1.260"
(Ø 20.00 mm - 32.00 mm)

Insert Holder
Ø 0.787" - 1.260"
(Ø 20.00 mm - 32.00 mm)

Serrated Tool Body
Ø 0.787" - 1.260"
(Ø 20.00 mm - 32.00 mm)

Tool Holder in Carbide
Ø 0.394" - 0.787"
(Ø 10.00 mm - 20.00 mm)

Tool Holder in Steel
Ø 0.236" - 0.787"
(Ø 6.00 mm - 20.00 mm)

Adapter

Recessing Tool
Ø 0" - 5.787"
(Ø 0 mm - 14.70 mm)

Mini-Boring Tool
Ø 0.118" - 0.394"
(Ø 3.00 mm - 10.00 mm)

OPERATION **VERSATILITY**

from **0.118"** to **8.189"** (**3.00 mm** to **208.00 mm**)

plus outside turning

NOTE: Imperial items pictured.
NOTE: Adjustment accuracy of 0.0001" or 0.002 mm on diameter.

Wohlhaupter Boring Kits

WE HAVE A **KIT** FOR THAT

Kits aren't for everyone, but if you work on different projects from day to day, you need ***to be prepared for the work tomorrow will bring.***

VERSATILE SETUPS AND IMPROVED READINESS

BROAD SELECTION OF DIAMETER RANGES

EASY, CONVENIENT STORAGE AND ORGANIZATION

COST SAVINGS OVER BUYING INDIVIDUAL COMPONENTS

DIGIBORE ***KITS***

- Diameter range: **0.394" - 8.189"** (10.00 mm - 208.00 mm).
- Available in both inch (ⓘ) and metric (ⓜ).
- Inserts and master shanks sold separately.
- Insert form 20 and 101 available.

Kits Ø 0.393" - 1.259" (10.00 mm - 32.00 mm)	Form 101	Form 20
ⓘ Kit Part No.	104061	104062
ⓜ Kit Part No.	103061	103062

Kits Ø 2.677" - 5.984" (68.00 mm - 152.00 mm)	Form 101	Form 20
ⓘ Kit Part No.	104065	104066
ⓜ Kit Part No.	103065	103066

Kits Ø 1.259" - 2.677" (32.00 mm - 68.00 mm)	Form 101	Form 20
ⓘ Kit Part No.	104063	104064
ⓜ Kit Part No.	103063	103064

Kits Ø 3.779" - 8.189" (96.00 mm - 208.00 mm)	Form 101	Form 20
ⓘ Kit Part No.	104081	104080
ⓜ Kit Part No.	103081	103080

VARIOBORE ***KITS***

- Diameter range: **0.394" - 4.016"** (10.00 mm - 102.00 mm).
- Available in both inch (ⓘ) and metric (ⓜ).
- Inserts and master shanks sold separately .
- Insert form 20 and 101 available.
- Kits available in both digital and non-digital .

NOTE: Imperial display pictured.
NOTE: 3E^{TECH+} adjustment accuracy of 0.00005" or 0.001 mm on diameter.
NOTE: Vernier adjustment accuracy of 0.0001" or 0.002 mm on diameter.

3E TECH+

***Portable Digital Display**
Use with multiple boring heads equipped with a **3E^{TECH}** port.

3E^{TECH+} Digital Readout Module

Part No.	Charging Unit*
536015	536016

NOTE: WEEE-Reg.-Nr. DE 15820388.
*Charging unit sold separately.

Digital Kits Ø 0.394" - 1.181" (10.00 mm - 30.00 mm)	Form 101	Form 20
ⓘ Kit Part No.	104046	104045
ⓜ Kit Part No.	103046	103045
NOTE: 3E^{TECH+} sold separately.		

Non-Digital Kits Ø 0.394" - 1.181" (10.00 mm - 30.00 mm)	Form 101	Form 20
ⓘ Kit Part No.	104050	104049
ⓜ Kit Part No.	103050	103049

Digital Kits Ø 0.394" - 4.016" (10.00 mm - 102.00 mm)	Form 101	Form 20
Kit Part No.		
ⓘ Kit Part No.	104048	104047
ⓜ Kit Part No.	103048	103047
NOTE: 3E^{TECH+} sold separately.		

Non-Digital Kits Ø 0.394" - 4.016" (10.00 mm - 102 mm)	Form 101	Form 20
ⓘ Kit Part No.	104052	104051
ⓜ Kit Part No.	103052	103051

PRIMEBORE ***KITS***

- Diameter range: **0.236" - 5.039"** (6.00 mm - 128.00 mm).
- Available in both inch (ⓘ) and metric (ⓜ).
- Inserts and master shanks sold separately.
- Insert form 20 and 101 available.

	Form 101 / 211	Form 20 / 211
ⓘ Kit Part No.	104088	104089
ⓜ Kit Part No.	103088	103089

MASTER SHANKS WITH MVS (sold separately)

CAT | Dual Contact CAT | BT | Dual Contact BT | HSK | PSC | NMTB | MT | R8

249 (248) and 511 (510) Versatile Fine Boring

249 (248)
Versatile Fine Boring
Ø 0.118" - 1.189" (3.00 mm - 30.20 mm)

Features
- Compact construction.
- 0.0005" (0.010 mm) dial adjustment on diameter.
- Variable length adjustment with accessories.
- Coolant through.

511 (510)
Versatile Fine Boring
Ø 0.016"- 1.339" (0.40 mm- 34.00 mm)

Features
- 0.0001" (0.02 mm) digital adjustment on diameter.
- Lengths and diameters achieved through the use of boring tools and bars.
- Four balancing elements for precision .
- Coolant through.

NOTE: Imperial items pictured.

NOTE: Adjustment accuracy of 0.0001" or 0.002 mm on diameter.

420 (410) & 465 (464)
3E^{TECH+} Digital Fine Boring
Ø 0.787"- 8.071" (20.00 mm- 205.00 mm)

NOTE: 3E^{TECH+} adjustment accuracy of 0.00005" or 0.001 mm on diameter.

NOTE: Vernier adjustment accuracy of 0.0001" or 0.002 mm on diameter.

Features
- 3E^{TECH+} and vernier diameter adjustment of 0.0001" (0.002 mm).
- 420 (410) diameter range: 0.787" - 1.142" (20.00 mm - 29.00 mm).
- 465 (464) Balance diameter range: 1.142" - 8.071" (29.00 mm - 205.00 mm).
- 465 (464) Balance Alu-Line diameter range: 2.559" - 8.071" (65.00 mm-205.00 mm).
- Coolant through.
- Insert holder can be rotated for reverse machining.

465 (464) Balance & 365 (364) Balance
Analog Fine Boring
Ø 0.787"- 1.988" (20.00 mm- 50.50 mm)

Features
- 365 (364) diameter range: 0.787" - 1.161" (20.00 mm - 29.50 mm).
- 465 (464) diameter range: 1.142" - 8.071" (29.00 mm - 205.00 mm).
- 465 (464) Alu-Line diameter range: 2.559" - 8.071" (65.00 mm - 205.00 mm).
- Internal balancing improves tool life and surface finish.
- Vernier diameter adjustment of 0.0001" (0.002 mm).
- Insert holder can be rotated for reverse machining.
- Coolant through.

565 (564) Balance Digital Fine Boring | 320 (310) Analog Boring

565 (564) Balance
Digital Fine Boring
Ø 1.969"- 8.071" (50.00 mm- 25.00 mm)

Features
- 0.0001" (0.002 mm) digital adjustment on diameter.
- Internal autobalancing.
- Tools with Ø 1.969" - 2.579" (50.00 mm - 65.50 mm) are made of steel.
- Tools with Ø 2.559" - 8.071" (65.00 mm - 205.00 mm) are made of aluminum.
- Coolant through.
- Insert holder can be rotated for reverse machining.
- Can be used with Alu-Line serrated slides for large diameter OD turning.

320 (310)
Analog Boring
Ø 0.787"- 8.071" (20.00 mm- 205.00 mm)

Features
- 0.0001" (0.002 mm) vernier adjustment on diameter.
- Tools with Ø 0.787" - 4.05" (20.00 mm - 103.00 mm) are made of steel.
- Tools with Ø 3.937 - 8.071" (100.00 mm - 205.00 mm) are made of aluminum.
- Insert holder can be rotated for reverse machining.
- Coolant through.
- Can be used with Alu-Line serrated slides for large diameter OD turning.

538 (537) Fine Boring Cassettes and Combi-Line Rough and Finish Boring Heads

538 (537)
Analog & 3E^{TECH+} Digital Cassette
Ø 3.937" - 128.15" (100.00 mm - 3255.00 mm)

Features

- 0.0001" (0.002 mm) analog and digital adjustment on diameter.
- Ø 3.937" - 8.071" (100.00 mm - 205.00 mm) on serrated tool bodies.
- Ø 7.874" - 128.150" (200.00 mm - 3255.00 mm) on Alu-Line slides.
- 3E^{TECH+} module provides a simple digital readout.
- Analog version with a vernier scale.
- Insert holders can be rotated for reverse machining.

NOTE: 3E^{TECH+} adjustment accuracy of 0.00005" or 0.001 mm on diameter.

NOTE: Vernier adjustment accuracy of 0.0001" or 0.002 mm on diameter.

Combi-Line
Rough & Finish Boring
Ø 0.965"- 7.913" (24.50 mm- 201.00 mm)

Features

- Rough and finish boring in one operation.
- 0.0001" (0.002 mm) vernier adjustment on finishing insert holder.
- Available in height displaced and same level cutting.
- Coolant through.
- Standard ISO inserts.

Twin Cutter and VolCut

Twin Cutter Tools

Ø 3.937"- 128.15" (100.00 mm- 3255.00 mm)

Features

- Available with cylindrical shanks or MVS shanks.
- Same level to double feed.
- Height displacement to double material removal.
- Coolant through.
- Standard ISO inserts.

VolCut

Rough Machining Insert Holders

Ø 1.969"- 8.071" (50.00 mm- 25.00 mm)

Features

- Increased material removal up to 2.755" (70.00 mm) on diameter.
- Low machine power consumption with our form 464/OP indexable inserts.
- Excellent chip control even with long-chipping materials.
- High cutting speeds for reduced cycle times.
- Wohlhaupter standared serrated tool bodies for unmatched length and diameter solutions.
- Wohlhaupter MVS connection.

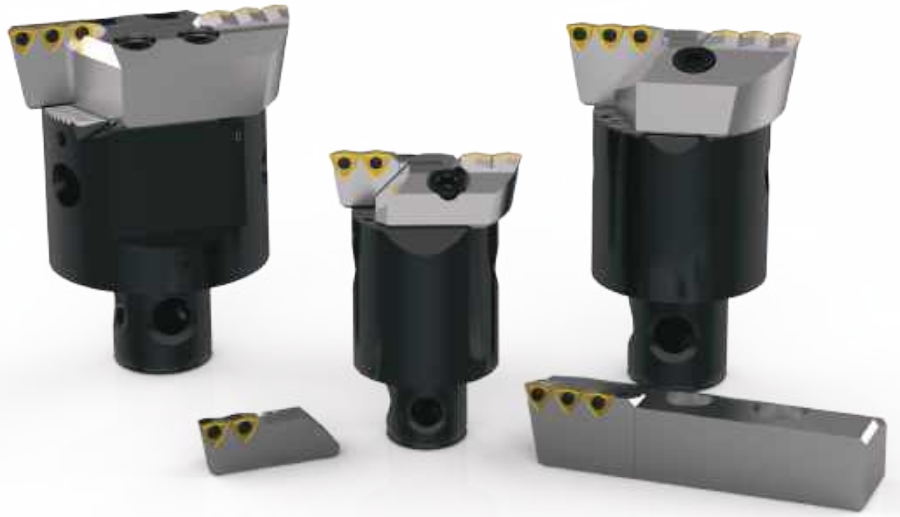

Grooving Tools and Chamfering Tools

Grooving Tools

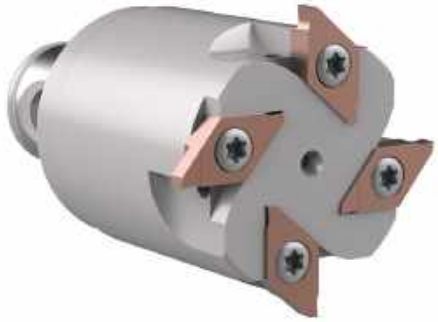

Grooving Tools for Circular Milling

Ø >0.787" (20.00 mm)

Features

- Groove widths from 0.050" (1.27 mm).
- Two - eight inserts (depending on diameter).
- Two-sided inserts.
- Coolant through.

Axial Grooving Tools

Ø 0.787"- 8.071" (20.00 mm- 205.00 mm)

Features

- Groove widths from 0.138" - 0.295" (3.50 mm - 7.50 mm).
- Three-sided inserts.
- Utilizes the same serrated tool body as other roughing tools.

Chamfering Tools

Ø >0.748" (19.00 mm)

Features

- Utilizes the same serrated tool holder as other roughing tools.
- Chamfer angle of 15°, 20°, 30°, and 45°.
- Coolant through.
- Standard ISO inserts.

Inserts

Cutting-Edge Technology

Wohlhaupter has the cutting-edge technology to achieve success in all of your boring applications. With precision in mind, our inserts are available in multiple insert geometries, coatings, and nose radii. Wohlhaupter inserts are offered in uncoated and coated carbide, cermet, and also CBN and PCD materials.

To find the perfect inserts for your boring applications, try our user-friendly insert selector available at the link below or download it at the app store.
www.alliedmachine.com/bis

Wohlhaupter Special Boring Solutions

When it comes to special solutions for customers, Wohlhaupter has unique capabilities to effectively design and develop custom boring tools. Our special boring tools are designed for specific machines, processes, and materials to help decrease your cycle time.

- Lay down cartridge tool with replaceable cartridges.
- Large OD boring tools.
- Combined multidiameter tools.
- Special boring tools with guide pads.
- Line boring tools.
- 3E^{TECH+} digital readout module docking capabilities.
- Special boring bars with standard tool connection.
- MVS connection for quick and easy connections.
- Decrease cycle time.

Online Tools

ToolMD®

Increase the production and success of your applications today.

- Access 2D drawings and 3D models directly.
- Assemble and view tool images in your browser.
- Download drawings for use in most machining software programs.
- Browse products, search item numbers, and save assemblies for future use.

Design Your Own Solutions

ToolMD is a configurator for Allied tooling and Wohlhaupter modular systems that allows customers to virtually build their own solution. This online-based simulator puts our inventory at your fingertips. It provides a digital bank of individual parts in either inch or metric measurements.

Once you select a component, you will be guided by a series of user-friendly prompts to select the next components until you have built your tooling system. Throughout the process, you can monitor the size of your custom tool and ensure what you're building matches your real-life specifications. Once a complete system is virtually assembled, the program will render the tool in either a 2D drawing or 3D model to view on your device. Each project can be saved for future editing.

Designing your tools with ToolMD saves you time and allows you to instantly obtain the right tool for the job.

Design anytime from anywhere.
Available online 24/7.
toolmd.com

WOHLHAUPTER®
Boring Insert Selector

Find the best insert for your application.

- Generate the correct boring insert for your job in just six easy steps.
- Choose type, shape, substrate, insert form, nose radius, and material.
- Order easily by adding the item to your cart.

www.alliedmahcine.com/bis

SECTION

B20

Criterion® Boring Systems

Criterion® Modular Boring Systems

MBS | CBS | MDS | Cri-Bore® | Large Cri-Bore® | CB Style

CRITERION®

Boring holes doesn't have to be boring.

Criterion modular boring systems bring speed, tolerance, toughness, and versatility to your boring applications.

The MBS finish boring tool is ideal for small diameter bores and high spindle speeds to bore quickly and efficiently.

The Cri-Bore boring system is designed for finish boring applications and can be used for extremely tight tolerances. When the tolerance is tight, the Cri-Bore can be adjusted in 0.00005" (fifty-millionths).

The versatile CB style boring heads are available in both microadjusting and standard. Made for maximum toughness, the CB style boring head can produce a wide range of diameters.

Aerospace | Agriculture | Automotive | Firearms | Renewable Energy

Your safety and the safety of others is very important. This catalog contains important safety messages. Always read and follow all safety precautions.

This triangle is a safety hazard symbol. It alerts you to potential safety hazards that can cause tool failure and serious injury.

When you see this symbol in the catalog, look for a related safety message that may be near this triangle or referred to in the nearby text.

There are safety signal words also used in the catalog. Safety messages follow these words.

WARNING

WARNING (shown above) means that failure to follow the precautions in this message could result in tool failure and serious injury.

NOTICE means that failure to follow the precautions in this message could result in damage to the tool or machine but not result in personal injury.

NOTE and **IMPORTANT** are also used. These are important that you read and follow but are not safety-related.

Visit www.alliedmachine.com for the most up-to-date information and procedures.

Criterion® Modular Boring Systems Contents

Reference Icons
The following icons will appear throughout the catalog to help you navigate between products.

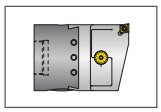

Boring Heads - Insert Holders
Microadjusting boring heads that use inserts for cutting

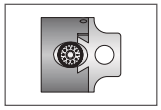

Boring Heads - Boring Bar Holders
Standard and microadjusting boring heads that use boring bars for cutting

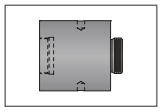

Head-to-Shank Adapters
Extensions and reducers that attach the boring head to the shank

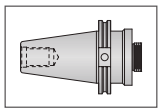

Shanks
A variety of shanks for different machines

Setup / Assembly Information
Detailed instructions and information regarding the corresponding part(s)

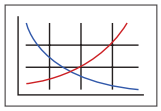

Recommended Cutting Data
Speed and feed recommendations for optimum and safe boring

MBS Finish Boring Tools . . . . . 2 - 6

CBS Finish Boring Tools . . . . . 8 - 11

MDS Finish Boring Tools . . . . . 12 - 13

Cri-Bore® Micro-adjusting Finish Boring Heads . . . . . 14 - 16

Large Cri-Bore® Finish Boring / OD Turning System . . . . . 18 - 23

CB Style Versatile Finish Boring Heads . . . . . 24 - 43

Intermediate Modules . . . . . 44 - 45

Master Shanks . . . . . 46 - 50

Parts & Accessories . . . . . 51 - 52

Technical Information . . . . . 53 - 55

Guidelines / Troubleshooting

Guidelines to Not Exceed Recommended Length 56

Calculating Tool Assembly Weight 57

Recommended Cutting Data . . . . . 58 - 59

Series	Bore Diameter Range	
	Imperial (inch)	Metric (mm)
MBS Finish Boring Tools	0.050" - 0.750"	–
CBS Finish Boring Tools	0.050" - 0.750"	–
MDS Finish Boring Tools	0.710" - 1.280"	18.00 mm - 33.00 mm
Cri-Bore® Micro-adjusting Finish Boring Heads	1.050" - 5.065"	27.00 mm - 128.00 mm
Large Cri-Bore® Finish Boring / OD Turning System	5.000" - 12.125"	127.00 mm - 308.00 mm
CB Style Versatile Finish Boring Heads	0.250" - 21.500"	–

WE KNOW
SPEED MATTERS

MBS Finish Boring Tool

Ideal for small diameter bores and high spindle speeds

Compact design great for live tooling

Cylindrical shank can be dropped into existing tool holders

MBS Finish Boring Tool

Bore Diameter Range: 0.050" - 0.750"

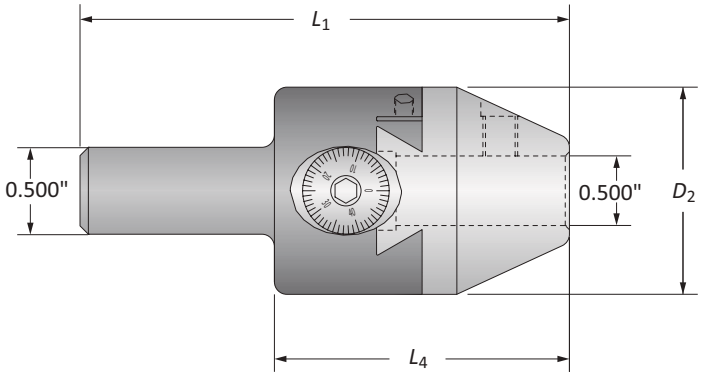

	Boring Range	Boring Head L_1	Boring Head L_4	Boring Head D_2	Weight	Part No.
i	0.050 - 0.750	3.500	2.125	1.500	0.900 (lbs)	**MBS0500B**

IMPORTANT: Wax covered gib screws are factory set and should not be removed. Adjustment of these screws will cause performance issues.
Imperial (in) = 0.001" adjustment on diameter.
NOTE: Max spindle speed: 7,000 RPM at 0 radial offset.

B20: 58 - 59
Key on B20: 1
B20: 54 - 55

i = Imperial (in)
m = Metric (mm)

IMPORTANT: Max spindle speed refers to maximum possible speed for individual boring head and is not a recommended parameter. Refer to page B20: 58 for recommended application specific parameters. Factory technical assistance is available for your specific applications through our Application Engineering department.
ext: **7611** | *email:* **appeng@alliedmachine.com**

Mini Coated Boring Tools

Bore Diameter Range: 0.050" - 0.275"

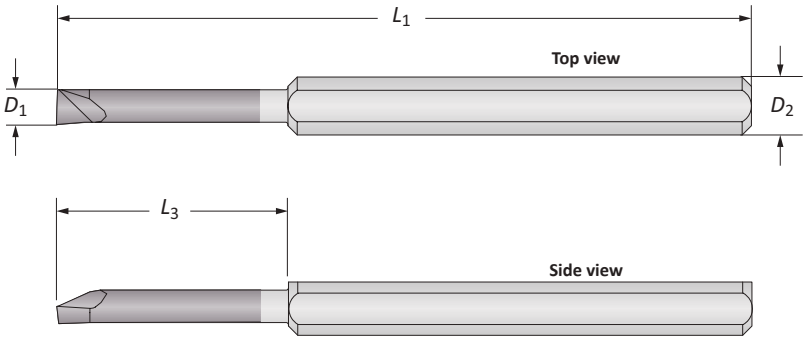

Mini Coated Boring Bars

	Min. Boring Diameter	Boring Bar				
	D_1	L_3	L_1	D_2	Weight	Part No.
	0.050	0.300	1.500	0.125*	0.010 (lbs)	**0050GA**
	0.060	0.300	1.500	0.125*	0.010 (lbs)	**0060GA**
	0.080	0.500	1.500	0.125*	0.010 (lbs)	**0080GA**
	0.100	0.600	1.500	0.125*	0.010 (lbs)	**0100GA**
	0.110	0.700	1.500	0.125*	0.010 (lbs)	**0110GA**
	0.120	0.750	2.500	0.250*	0.020 (lbs)	**0120HA**
	0.140	0.750	2.500	0.250*	0.020 (lbs)	**0140HA**
	0.160	0.875	2.500	0.250*	0.020 (lbs)	**0160HA**
	0.180	1.125	2.500	0.250*	0.020 (lbs)	**0180HA**
	0.200	1.250	2.500	0.250*	0.020 (lbs)	**0200HA**

*Reducing sleeve required

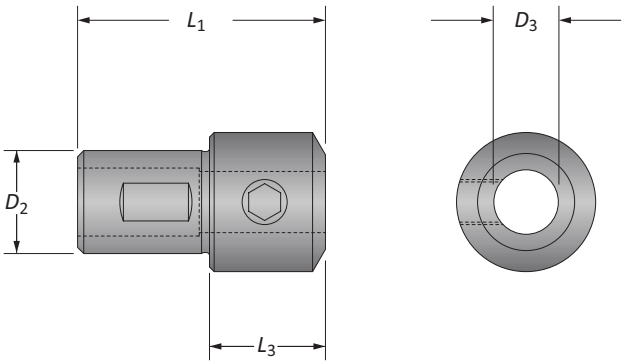

Reducing Sleeves

	Reducing Sleeve					
	D_3	D_2	L_1	L_3	Weight	Part No.
	0.125	0.500	2.000	0.220	0.100 (lbs)	**BTH-01250500**
	0.250	0.500	1.312	–	0.050 (lbs)	**BTH-02500500**

B20: 58 - 59
Key on B20: 1
B20: 54 - 55

i = Imperial (in)
m = Metric (mm)

Boring Bars

Bore Diameter Range: 0.250" - 0.750"

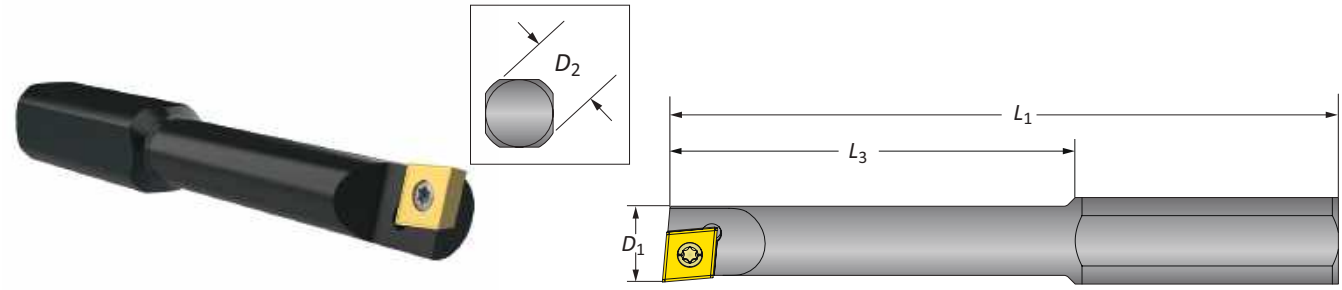

Steel Boring Bars | Bore Diameter Range: 0.250" - 0.750"

Min. Boring Diameter	Boring Bar					
D_1	L_3	L_1	D_2	Weight	Insert Form	Part No.
0.250	1.062	2.500	0.500	0.080 (lbs)	WBGX0301..	**0250B**
0.312	1.437	2.750	0.500	0.080 (lbs)	WBGX0301..	**0312B**
0.375	1.750	3.062	0.500	0.100 (lbs)	WBGX0301..	**0375B**
0.437	2.062	3.375	0.500	0.110 (lbs)	CC..215..	**0437B**
0.500	2.187	3.500	0.500	0.140 (lbs)	CC..215..	**0500B**

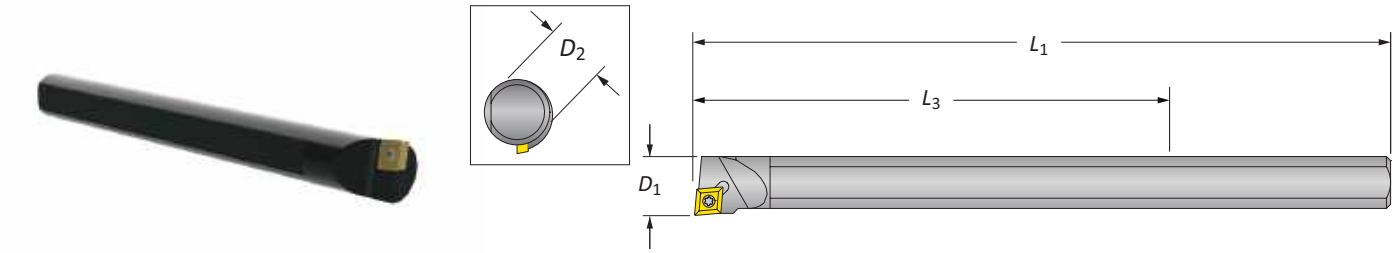

Heavy Metal Boring Bars | Bore Diameter Range: 0.365" - 0.750"

Min. Boring Diameter	Boring Bar					
D_1	L_3	L_1	D_2	Weight	Insert Form	Part No.
0.365	2.250	4.000	0.312*	0.080 (lbs)	CC..215..	**0365HM**
0.550	3.250	6.000	0.500	0.300 (lbs)	CC..215..	**0550BHM**

*Reducing sleeve required.

Carbide Boring Bars | Bore Diameter Range: 0.625" - 0.750"

Min. Boring Diameter	Boring Bar					
D_1	L_3	L_1	D_2	Weight	Insert Form	Part No.
0.625	4.500	8.000	0.500	0.410 (lbs)	CC..215..	**0625BCS**

Reducing Sleeves

Reducing Sleeve					
D_3	D_2	L_1	L_3	Weight	Part No.
0.312	0.500	1.312	–	0.040 (lbs)	**BTH-03120500**
0.375	0.500	1.312	–	0.030 (lbs)	**BTH-03750500**

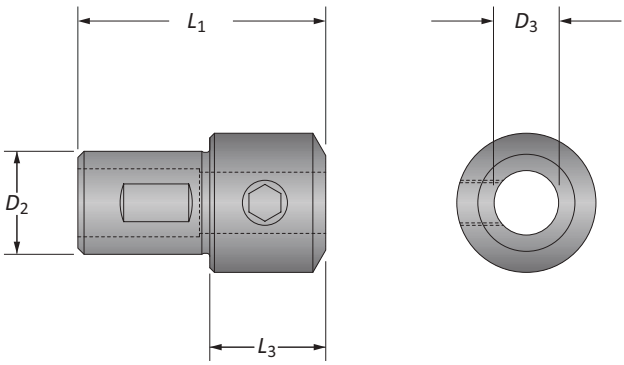

B20: 58 - 59
Key on B20: 1
B20: 54 - 55

= Imperial (in)
= Metric (mm)
Inserts sold separately

Boring Inserts

Trigon | 80° Diamond

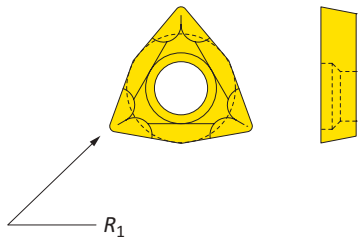

Coated Trigon Insert

	Insert Form	Insert R_1	Part No.
i	WBGX0301..	0.004	**WBGX030101**

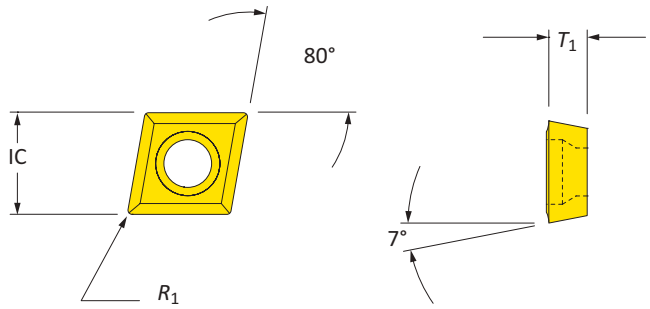

Coated 80° Diamond Insert

	Insert Form	Insert *IC*	*T_1*	*R_1*	Part No.
i	CC..215..	0.250	0.094	0.008	**CCMT060202**

B20: 58 - 59
Key on B20: 1
B20: 54 - 55

i = Imperial (in)
m = Metric (mm)
Inserts sold separately

Notes

WE KNOW
REACH MATTERS

CBS Finish Boring Tool

Ease the stress of reaching past fixturing

Ideal for small diameter bores with long overhangs

Cylindrical shank can be dropped into existing end mill (side-lock) holders

CBS Finish Boring Tool

Bore Diameter Range: 0.050" - 0.750"

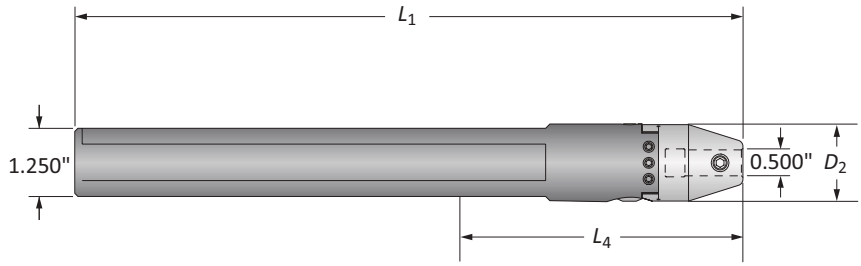

	Boring Range	Boring Head L_1	Boring Head L_4	Boring Head D_2	Weight	Part No.
ⓘ	0.050 - 0.750	10.600	8.320	1.250	3.100 (lbs)	**CBS1250B**

IMPORTANT: Wax covered gib screws are factory set and should not be removed. Adjustment of these screws will cause performance issues.
Imperial (in)= 0.001" adjustment on diameter.
NOTE: Max spindle speed: 3,500 RPM at 0 radial offset.

B20: 58 - 59
Key on B20: 1
B20: 54 - 55

ⓘ = Imperial (in)
ⓜ = Metric (mm)

IMPORTANT: Max spindle speed refers to maximum possible speed for individual boring head and is not a recommended parameter. Refer to page B20: 58 for recommended application specific parameters. Factory technical assistance is available for your specific applications through our Application Engineering department.
ext: **7611** | *email:* **appeng@alliedmachine.com**

Mini Coated Boring Tools

Bore Diameter Range: 0.050" - 0.275"

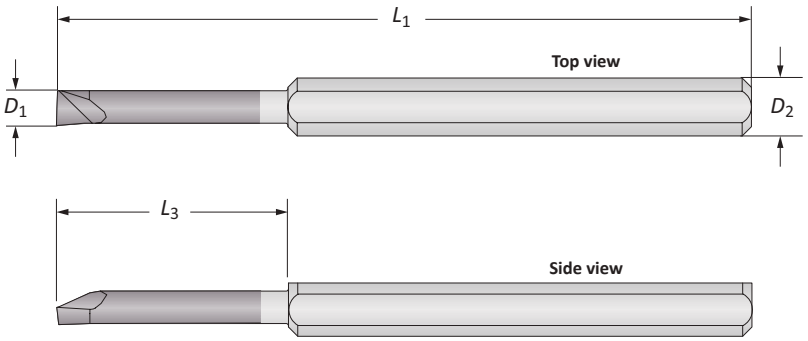

Mini Coated Boring Tools

	Min. Boring Diameter	Boring Bar				
	D_1	L_3	L_1	D_2	Weight	Coated Part No.
	0.050	0.300	1.500	0.125*	0.010 (lbs)	**0050GA**
	0.060	0.300	1.500	0.125*	0.010 (lbs)	**0060GA**
	0.080	0.500	1.500	0.125*	0.010 (lbs)	**0080GA**
	0.100	0.600	1.500	0.125*	0.010 (lbs)	**0100GA**
	0.110	0.700	1.500	0.125*	0.010 (lbs)	**0110GA**
	0.120	0.750	2.500	0.250*	0.020 (lbs)	**0120HA**
	0.140	0.750	2.500	0.250*	0.020 (lbs)	**0140HA**
	0.160	0.875	2.500	0.250*	0.020 (lbs)	**0160HA**
	0.180	1.125	2.500	0.250*	0.020 (lbs)	**0180HA**
	0.200	1.250	2.500	0.250*	0.020 (lbs)	**0200HA**

*Reducing sleeve required.

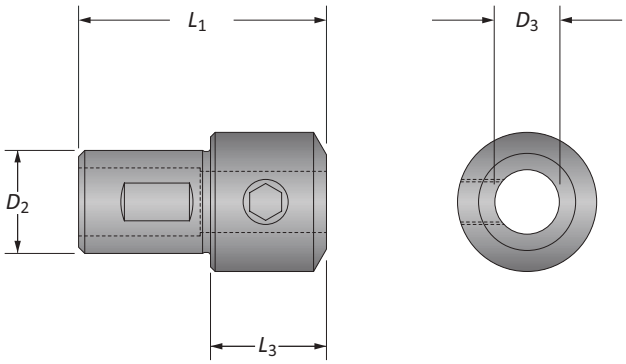

Reducing Sleeves

	Reducing Sleeve					
	D_3	D_2	L_1	L_3	Weight	Part No.
	0.125	0.500	2.000	0.220	0.100 (lbs)	**BTH-01250500**
	0.250	0.500	1.312	–	0.050 (lbs)	**BTH-02500500**
	0.375	0.500	1.312	–	0.030 (lbs)	**BTH-03750500**

B20: 58 - 59
Key on B20: 1
B20: 54 - 55

ⓘ = Imperial (in)
ⓜ = Metric (mm)

Steel Boring Bars | Boring Inserts

Bore Diameter Range: 0.250" - 0.750"

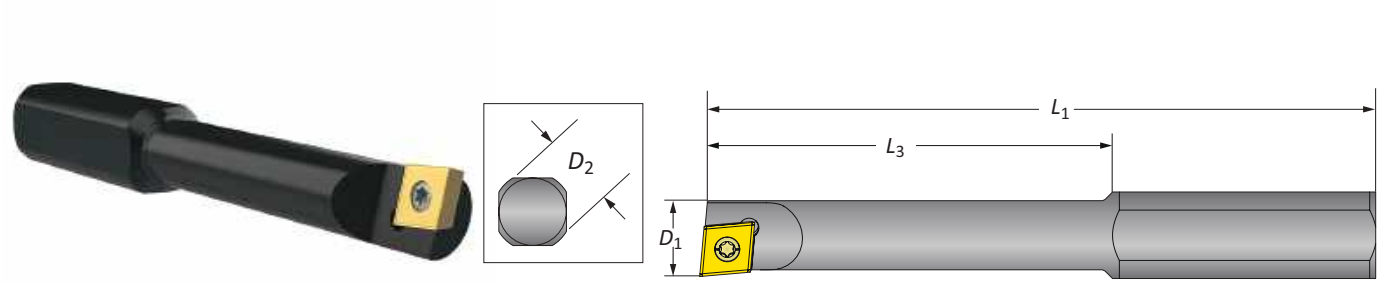

Steel Boring Bars

	Min. Boring Diameter	Boring Bar					
	D_1	L_3	L_1	D_2	Weight	Insert Form	Part No.
	0.250	1.062	2.500	0.500	0.080 (lbs)	WBGX0301...	**0250B**
	0.312	1.437	2.750	0.500	0.080 (lbs)	WBGX0301...	**0312B**
i	0.375	1.750	3.062	0.500	0.100 (lbs)	WBGX0301...	**0375B**
	0.437	2.062	3.375	0.500	0.110 (lbs)	CC..215..	**0437B**
	0.500	2.187	3.500	0.500	0.140 (lbs)	CC..215..	**0500B**

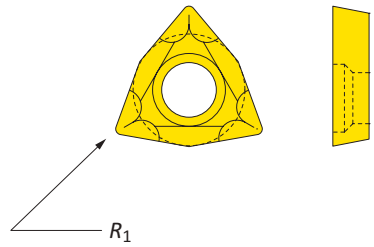

Coated Trigon Insert

		Insert	
	Insert Form	R_1	Part No.
i	WBGX0301...	0.004	**WBGX030101**

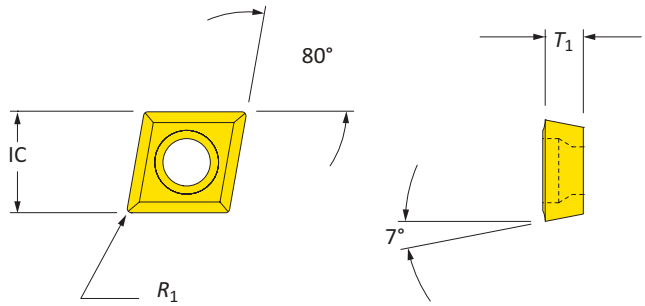

Coated 80° Diamond Insert

		Insert			
	Insert Form	*IC*	T_1	R_1	Part No.
i	CC..215..	0.250	0.094	0.008	**CCMT060202**

B20: 58 - 59
Key on B20: 1
B20: 54 - 55

i = Imperial (in)
m = Metric (mm)
Inserts sold separately

WE KNOW
CONVENIENCE MATTERS

MDS Finish Boring Tool

Compact design and rugged insert holder make it one of the toughest boring tools under 1.000" (25.4 mm) diameter

Cylindrical shank can be dropped into existing end mill (side-lock) holders

Available in both imperial (in) and metric (mm) versions

MDS Finish Boring Tools | Boring Inserts

Bore Diameter Range: 0.710" - 1.280" (18.00 mm - 33.00 mm)

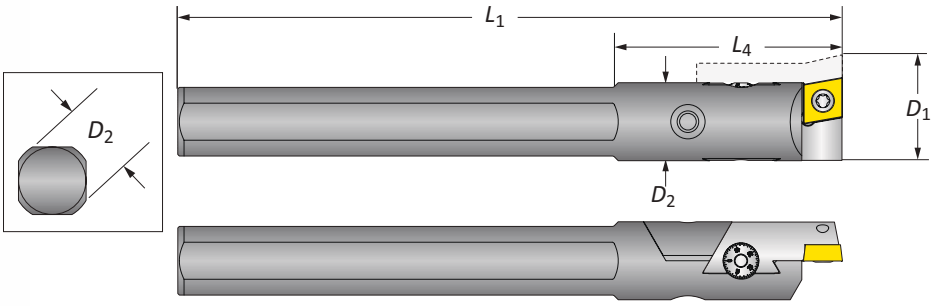

	Boring Range D_1	Shank Diameter D_2	Boring Head L_1	Boring Head Max L_4	Weight	Insert Form	Part No.
i	0.710 - 0.960	0.625	5.250	3.386	0.400 (lbs)	CC..215..	**MDS0625**
i	0.890 - 1.280	0.750	6.310	4.435	0.700 (lbs)	CC..325..	**MDS0750**
m	18.00 - 24.25	16.00	133.00	85.37	0.18 (kg)	CC..0602..	**MDS16M**
m	22.00 - 33.00	20.00	160.00	112.37	0.32 (kg)	CC..09T3..	**MDS20M**

Imperial (in) = 0.001" adjustment on diameter.
Metric (mm) = 0.020 mm adjustment on diameter.
NOTE: Max spindle speed: 1,000 SFM (305 M/Min) at 0 radial offset.

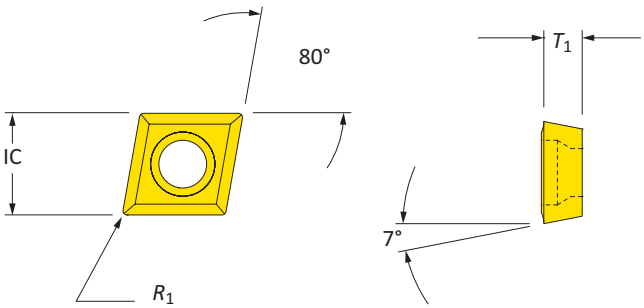

Coated 80° Diamond Inserts

	Insert Form	Insert *IC*	Insert T_1	Insert R_1	Part No.
i	CC..215..	0.250	0.094	0.008	**CCMT060202**
i	CC..325..	0.375	0.156	0.008	**CCMT09T302**
i	CC..325..	0.375	0.156	0.016	**CCMT09T304**
m	CC..0602..	6.35	2.38	0.20	**CCMT060202**
m	CC..09T3..	9.53	3.97	0.20	**CCMT09T302**
m	CC..09T3..	9.53	3.97	0.40	**CCMT09T304**

B20: 58 - 59

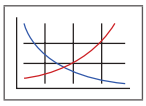

Key on B20:1

B20: 54 - 55

i = Imperial (in)
m = Metric (mm)
Inserts sold separately

IMPORTANT: Max spindle speed refers to maximum possible speed for individual boring head and is not a recommended parameter. Refer to page B20: 58 for recommended application specific parameters. Factory technical assistance is available for your specific applications through our Application Engineering department.
ext: **7611** | *email:* **appeng@alliedmachine.com**

WE KNOW
TOLERANCE MATTERS

Cri-Bore®
Micro-adjusting

Allows for 0.00005" (0.001 mm) on diameter bore increments

Modular system can be used on virtually any machine

Available in both imperial (in) and metric (mm) versions

www.alliedmachine.com | 1.330.343.4283

Cri-Bore® Micro-adjusting Finish Boring Heads

Bore Diameter Range: 1.050" - 5.065" (27.00 mm - 128.00 mm)

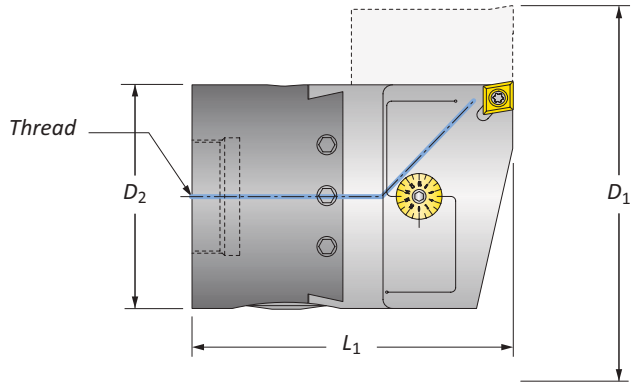

	Boring Range D_1	Thread Connection	Boring Head L_1	Boring Head D_2	Weight	Insert Form	Part. No
i	1.050 - 1.320	⅞ - 20	2.690	1.000	0.500 (lbs)	CC..215..	**CB1000CC**
	1.050 - 1.320	⅞ - 20	2.690	1.000	0.500 (lbs)	TC..215..	**CB1000TC**
	1.300 - 1.600	⅞ - 20	2.900	1.250	0.800 (lbs)	CC..215..	**CB1250CC**
	1.300 - 1.600	⅞ - 20	2.900	1.250	0.800 (lbs)	TC..215..	**CB1250TC**
	1.585 - 2.700	⅞ - 20	3.200	1.500	1.300 (lbs)	CC..325..	**CB1500CC**
	1.585 - 2.700	⅞ - 20	3.200	1.500	1.300 (lbs)	TC..325..	**CB1500TC**
	2.060 - 3.320	⅞ - 20	3.590	2.000	2.400 (lbs)	CC..325..	**CB2000CC**
	2.060 - 3.320	⅞ - 20	3.590	2.000	2.400 (lbs)	TC..325..	**CB2000TC**
	3.065 - 5.065	1½ - 18	4.100	3.000	5.800 (lbs)	CC..325..	**CB3000CC**
	3.065 - 5.065	1½ - 18	4.100	3.000	5.800 (lbs)	TC..325..	**CB3000TC**
m	27.00 - 33.00	⅞ - 20	68.35	25.00	0.23 (kg)	CC..0602..	**CB025MCC**
	27.00 - 33.00	⅞ - 20	68.35	25.00	0.23 (kg)	TC..1102..	**CB025MTC**
	33.00 - 41.00	⅞ - 20	73.65	32.00	0.36 (kg)	CC..0602..	**CB032MCC**
	33.00 - 41.00	⅞ - 20	73.65	32.00	0.36 (kg)	TC..1102..	**CB032MTC**
	41.00 - 68.00	⅞ - 20	81.25	38.00	0.59 (kg)	CC..09T3..	**CB038MCC**
	41.00 - 68.00	⅞ - 20	81.25	38.00	0.59 (kg)	TC..16T3..	**CB038MTC**
	53.00 - 84.00	⅞ - 20	91.30	50.00	1.09 (kg)	CC..09T3..	**CB050MCC**
	53.00 - 84.00	⅞ - 20	91.30	50.00	1.09 (kg)	TC..16T3..	**CB050MTC**
	78.00 - 128.00	1½ - 18	104.25	76.00	2.36 (kg)	CC..09T3..	**CB076MCC**
	78.00 - 128.00	1½ - 18	104.25	76.00	2.36 (kg)	TC..16T3..	**CB076MTC**

IMPORTANT: Wax covered gib screws are factory set and should not be removed. Adjustment of these screws will cause performance issues.
Imperial (in) = 0.00005" adjustment on diameter.
Metric (mm) = 0.001 mm adjustment on diameter.
NOTE: Max spindle speed: 1,000 SFM (305 M/Min) at 0 radial offset.

B20: 58 - 59
Key on B20: 1
B20: 46 - 50
B20: 44 - 45
B20: 54 - 55

i = Imperial (in)
m = Metric (mm)
Inserts sold separately

IMPORTANT: Max spindle speed refers to maximum possible speed for individual boring head and is not a recommended parameter. Refer to page B20: 58 for recommended application specific parameters. Factory technical assistance is available for your specific applications through our Application Engineering department.
ext: **7611** | *email:* **appeng@alliedmachine.com**

Boring Inserts

80° Diamond Insert | 60° Triangle Insert

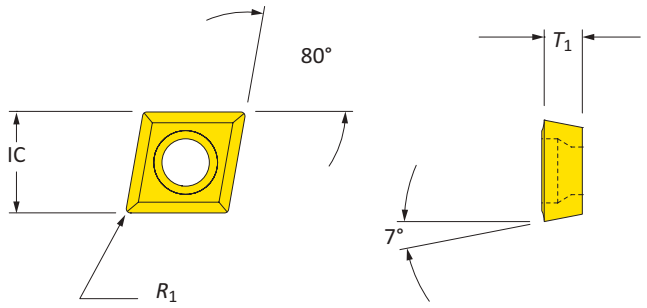

Coated 80° Diamond Inserts

	Insert Form	Insert IC	Insert T_1	Insert R_1	Part No.
i	CC..215..	0.250	0.094	0.008	**CCMT060202**
i	CC..215..	0.250	0.094	0.016	**CCMT060204**
i	CC..325..	0.375	0.156	0.008	**CCMT09T302**
i	CC..325..	0.375	0.156	0.016	**CCMT09T304**
m	CC..0602..	6.35	2.38	0.20	**CCMT060202**
m	CC..0602..	6.35	2.38	0.40	**CCMT060204**
m	CC..09T3..	9.53	3.97	0.20	**CCMT09T302**
m	CC..09T3..	9.53	3.97	0.40	**CCMT09T304**

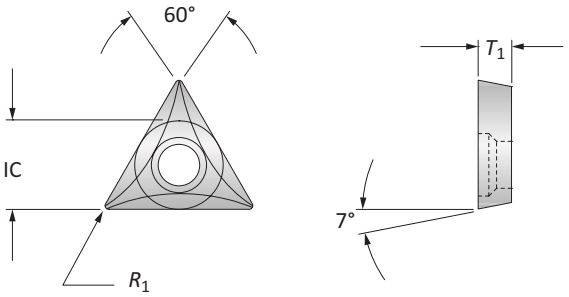

Coated 60° Triangle Inserts

	Insert Form	Insert IC	Insert T_1	Insert R_1	Part No.
i	TC..215..	0.250	0.094	0.008	**TCGT110202**
i	TC..215..	0.250	0.094	0.016	**TCGT110204**
i	TC..325..	0.375	0.156	0.016	**TCGT16T304**
m	TC..1102..	6.35	2.38	0.20	**TCGT110202**
m	TC..1102..	6.35	2.38	0.40	**TCGT110204**
m	TC..16T3..	9.53	3.97	0.40	**TCGT16T304**

B20: 58 - 59
Key on B20: 1
B20: 54 - 55

i = Imperial (in)
m = Metric (mm)
Inserts sold separately

Notes

EXTEND YOUR BORING RANGE

Large Cri-Bore® Finish Boring / OD Turning System

Extend the diameter range for internal and external boring

Modular tooling system allows for CAT, BT, or HSK shanks

Allows for 0.00005" (0.001 mm) on diameter bore increments

Large Cri-Bore Finish Boring / OD Turning System

Cri-Bore Boring Head / Optional Component Combinations

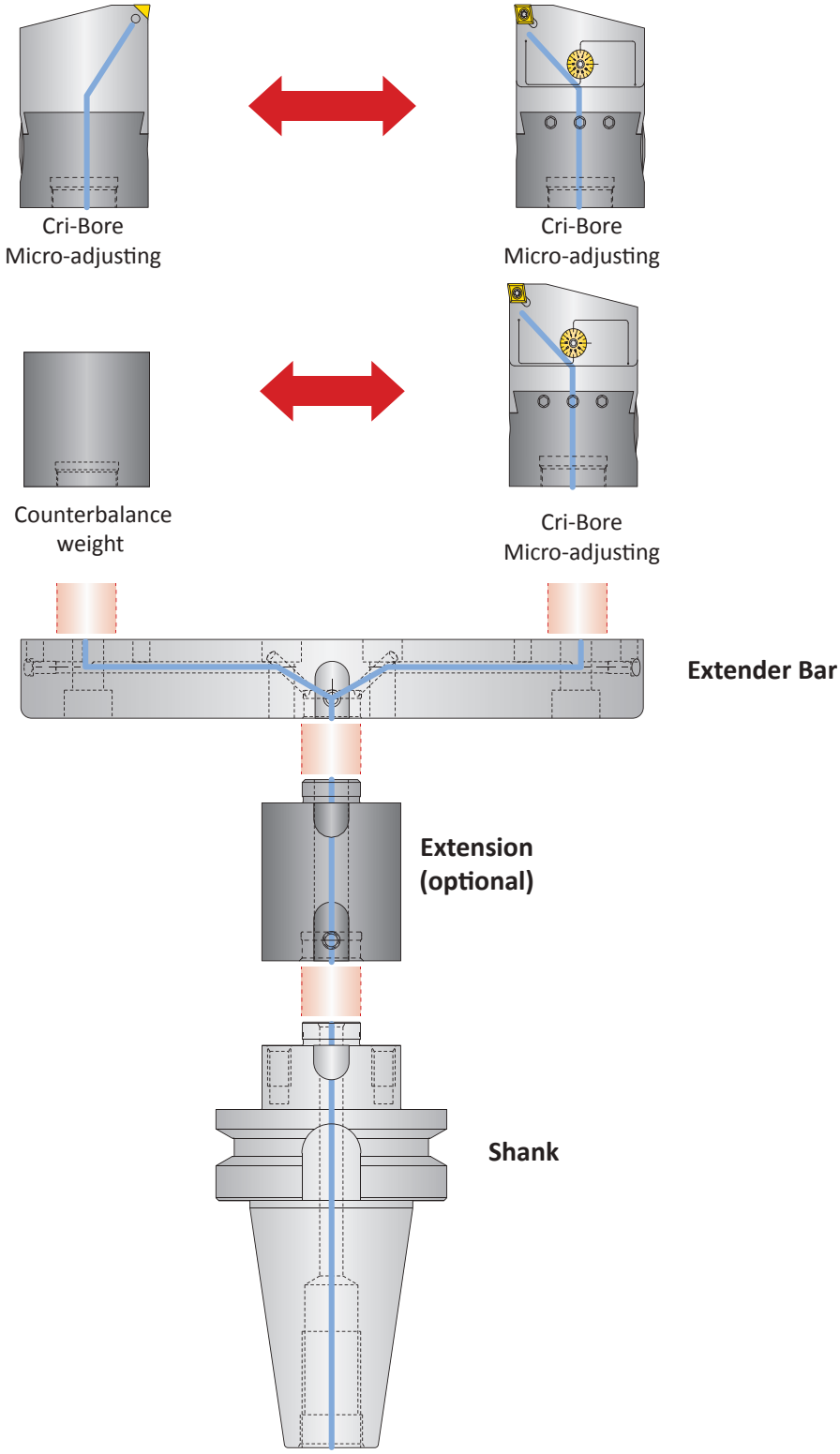

⚠ WARNING **Exceeding weight capacity for machine tool spindle and tool changer can cause machine damage and/or serious injury. To prevent:**
- Refer to page B20: 57 to see formula for calculating weight of tool assembly.
- Consult machine tool builder for machine's weight limitations.

Factory technical assistance is also available for specific applications through our Application Engineering department. *ext:* **7611** | *email:* **appeng@alliedmachine.com**

⚠ WARNING **Tool failure can cause serious injury. To prevent:**
- Do not exceed recommended 9xD length-to-diameter ratio or exceed 4 total components (including shank)
- Refer to example on page B20: 56 for calculating length to diameter ratio

Factory technical assistance is available for your specific applications through our Application Engineering department. *ext:* **7611** | *email:* **appeng@alliedmachine.com**

Cri-Bore Micro-adjusting Finish Boring Heads | Counter Weights

Bore ID Range: 5.000" - 12.125" (127.00 mm - 307.90 mm) | Bore OD Range: 0.710" - 7.830" (18.10 mm - 198.80 mm)

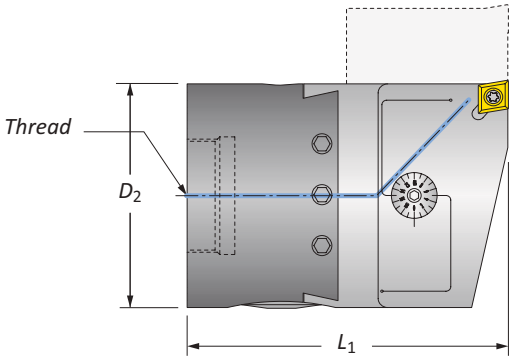

Cri-Bore Micro-adjusting Boring Heads

	Connection Thread	Boring Head L_1	Boring Head D_2	Weight	Insert Form	Part No.
i	⅞ - 20	3.200	1.500	1.300 (lbs)	CC..325..	**CB1500CC**
	⅞ - 20	3.200	1.500	1.300 (lbs)	TC..325..	**CB1500TC**
m	⅞ - 20	81.25	38.00	0.59 (kg)	CC..09T3..	**CB038MCC**
	⅞ - 20	81.25	38.00	0.59 (kg)	TC..16T3..	**CB038MTC**

IMPORTANT: Wax covered gib screws are factory set and should not be removed. Adjustment of these screws will cause performance issues.
Imperial (in) = 0.00005" adjustment on diameter.
Metric (mm) = 0.001 mm adjustment on diameter.
NOTE: Max spindle speed ID boring: 1,000 SFM (305 M/Min) at 0 radial offset and used with counter weight or additional boring head.
NOTE: Max spindle speed OD boring: Contact our Application Engineering department.

Large Cri-Bore Counter Weights

	Counter Weight D_2	Counter Weight L_1	Weight	Part No.
i	1.500	2.580	1.250 (lbs)	**LCB1500-CBWTA**
m	38.10	65.53	0.57 (kg)	**LCB1500-CBWTA**

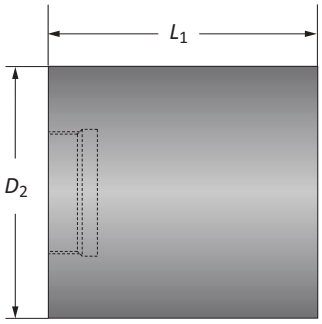

B20: 58 - 59
Key on B20: 1
B20: 54 - 55

i = Imperial (in)
m = Metric (mm)
Inserts sold separately

IMPORTANT: Max spindle speed refers to maximum possible speed for individual boring head and is not a recommended parameter. Refer to page B20: 58 for recommended application specific parameters. Factory technical assistance is available for your specific applications through our Application Engineering department.
ext: **7611** | *email:* **appeng@alliedmachine.com**

WARNING **Exceeding weight capacity for machine tool spindle and tool changer can cause machine damage and/or serious injury. To prevent:**
- Refer to page B20: 57 to see formula for calculating weight of tool assembly.
- Consult machine tool builder for machine's weight limitations.

Factory technical assistance is also available for specific applications through our Application Engineering department. *ext:* **7611** | *email:* **appeng@alliedmachine.com**

WARNING **Tool failure can cause serious injury. To prevent:**
- Do not exceed recommended 9xD length-to-diameter ratio or exceed 4 total components (including shank)
- Refer to example on page B20: 56 for calculating length to diameter ratio

Factory technical assistance is available for your specific applications through our Application Engineering department. *ext:* **7611** | *email:* **appeng@alliedmachine.com**

Large Cri-Bore Finish Boring / OD Turning System Extender Bars | Extensions

Bore ID Range: 5.000" - 12.125" (127.00 mm - 307.90 mm) | Bore OD Range: 0.710" - 7.830" (18.10 mm - 198.80 mm)

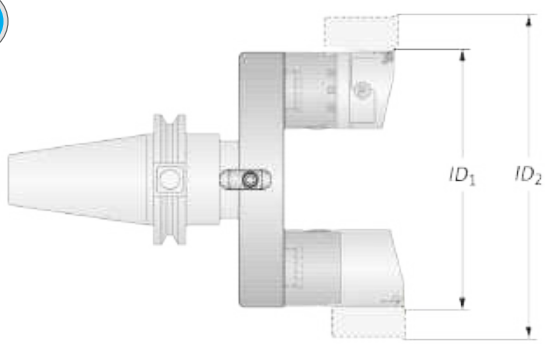

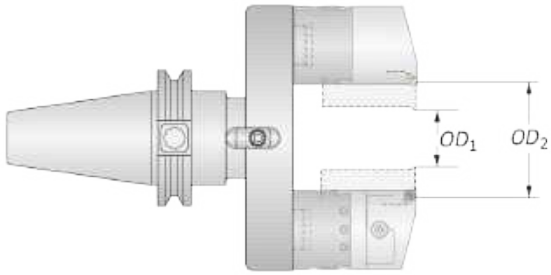

Large Cri-Bore Extender Bars

	Extender Bar					
	ID_1	ID_2	OD_1	OD_2	Weight	Part No.
i	5.000	6.125	0.710	1.830	1.560 (lbs)	**LCB1500-56EBK**
	6.000	7.125	1.710	2.830	1.920 (lbs)	**LCB1500-67EBK**
	7.000	8.125	2.710	3.830	2.290 (lbs)	**LCB1500-78EBK**
	8.000	9.125	3.710	4.830	2.650 (lbs)	**LCB1500-89EBK**
	9.000	10.125	4.710	5.830	3.010 (lbs)	**LCB1500-910EBK**
	10.000	11.125	5.710	6.830	3.370 (lbs)	**LCB1500-1011EBK**
	11.000	12.125	6.710	7.830	3.730 (lbs)	**LCB1500-1112EBK**
m	127.00	155.50	18.10	46.40	0.71 (kg)	**LCB1500-56EBK**
	152.40	180.90	43.50	71.80	0.87 (kg)	**LCB1500-67EBK**
	177.80	206.30	68.90	97.20	1.04 (kg)	**LCB1500-78EBK**
	203.20	231.70	94.30	122.60	1.20 (kg)	**LCB1500-89EBK**
	228.60	257.10	119.70	148.00	1.37 (kg)	**LCB1500-910EBK**
	254.00	282.50	145.10	173.40	1.53 (kg)	**LCB1500-1011EBK**
	279.40	307.90	170.50	198.80	1.69 (kg)	**LCB1500-1112EBK**

Large Cri-Bore Extensions

	Extension			
	D_1	L_1	Weight	Part No.
i	1.500	1.500	0.660 (lbs)	**LCB1500-IA1500**
	1.500	3.000	1.330 (lbs)	**LCB1500-IA3000**
	1.500	4.500	1.980 (lbs)	**LCB1500-IA4500**
m	38.10	38.10	0.30 (kg)	**LCB1500-IA1500**
	38.10	76.20	0.60 (kg)	**LCB1500-IA3000**
	38.10	114.30	0.90 (kg)	**LCB1500-IA4500**

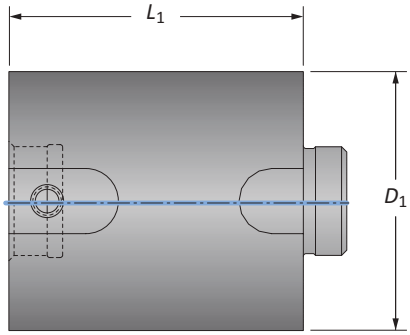

NOTE: Only one extension can be used per boring assembly. Extensions cannot be combined.

B20: 58 - 59
Key on B20: 1
B20: 54 - 55

i = Imperial (in)
m = Metric (mm)

Inserts sold separately

WARNING **Exceeding weight capacity for machine tool spindle and tool changer can cause machine damage and/or serious injury. To prevent:**
- Refer to page B20: 57 to see formula for calculating weight of tool assembly.
- Consult machine tool builder for machine's weight limitations.

Factory technical assistance is also available for specific applications through our Application Engineering department. *ext:* **7611** | *email:* **appeng@alliedmachine.com**

WARNING **Tool failure can cause serious injury. To prevent:**
- Do not exceed recommended 9xD length-to-diameter ratio or exceed 4 total components (including shank)
- Refer to example on page B20: 56 for calculating length to diameter ratio

Factory technical assistance is available for your specific applications through our Application Engineering department. *ext:* **7611** | *email:* **appeng@alliedmachine.com**

Large Cri-Bore Finish Boring / OD Turning System Shanks

Bore ID Range: 5.000" - 12.125" (127.00 mm - 307.90 mm) | Bore OD Range: 0.710" - 7.830" (18.10 mm - 198.80 mm)

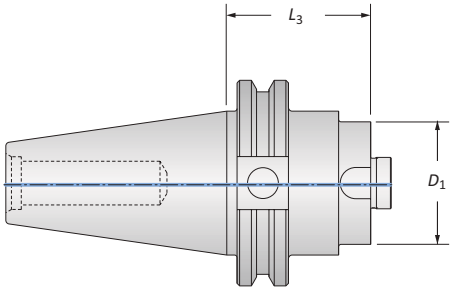

CAT40 Shank

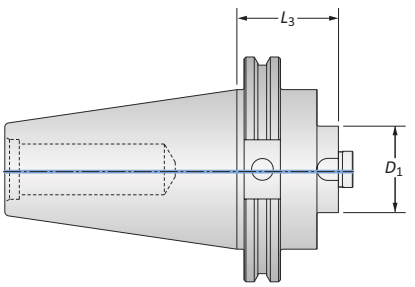

CAT50 Shank

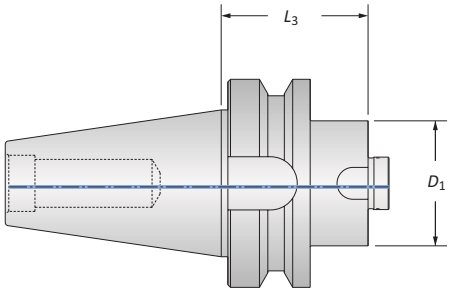

BT40 Shank

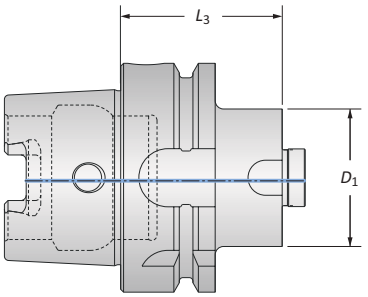

HSK63A Shank

	Shank				
	L_3	D_1	Taper	Weight	Part No.
i	1.750	1.500	CAT40	2.410 (lbs)	**LCB1500-CV40**
i	1.750	1.500	CAT50	6.960 (lbs)	**LCB1500-CV50**
i	1.750	1.500	BT40	2.460 (lbs)	**LCB1500-BT40**
i	1.750	1.500	HSK63A	1.750 (lbs)	**LCB1500-HSK63A**
m	44.45	38.10	CAT40	1.09 (kg)	**LCB1500-CV40**
m	44.45	38.10	CAT50	3.16 (kg)	**LCB1500-CV50**
m	44.45	38.10	BT40	1.12 (kg)	**LCB1500-BT40**
m	44.45	38.10	HSK63A	0.79 (kg)	**LCB1500-HSK63A**

B20: 58 - 59

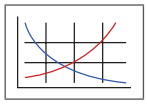

Key on B20: 1

B20: 54 - 55

i = Imperial (in)
m = Metric (mm)
Inserts sold separately

WARNING **Exceeding weight capacity for machine tool spindle and tool changer can cause machine damage and/or serious injury. To prevent:**
- Refer to page B20: 57 to see formula for calculating weight of tool assembly.
- Consult machine tool builder for machine's weight limitations.

Factory technical assistance is also available for specific applications through our Application Engineering department. *ext:* **7611** | *email:* **appeng@alliedmachine.com**

WARNING **Tool failure can cause serious injury. To prevent:**
- Do not exceed recommended 9xD length-to-diameter ratio or exceed 4 total components (including shank)
- Refer to example on page B20: 56 for calculating length to diameter ratio

Factory technical assistance is available for your specific applications through our Application Engineering department. *ext:* **7611** | *email:* **appeng@alliedmachine.com**

Boring Inserts

80° Diamond Insert | 60° Triangle Insert

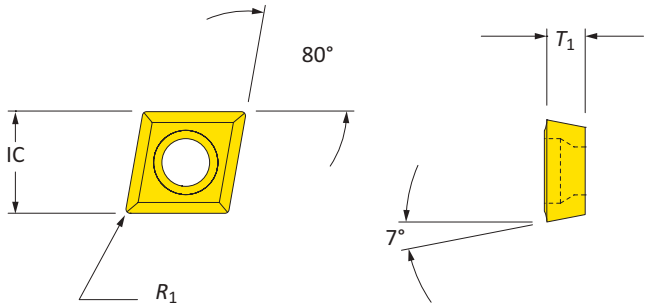

Coated 80° Diamond Inserts

	Insert Form	Insert IC	Insert T_1	Insert R_1	Part No.
i	CC..325..	0.375	0.156	0.008	**CCMT09T302**
i	CC..325..	0.375	0.156	0.016	**CCMT09T304**
i	CC..325..	0.375	0.156	0.031	**CCMT09T308**
m	CC..09T3..	9.53	3.97	0.20	**CCMT09T302**
m	CC..09T3..	9.53	3.97	0.40	**CCMT09T304**
m	CC..09T3..	9.53	3.97	0.80	**CCMT09T308**

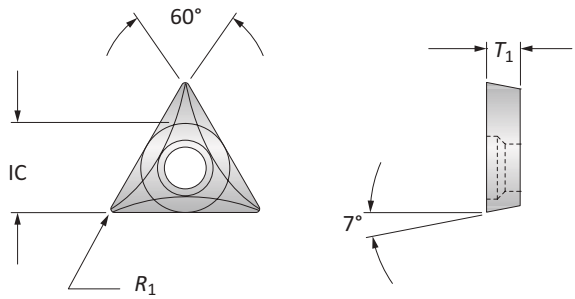

Coated 60° Triangle Inserts

	Insert Form	Insert IC	Insert T_1	Insert R_1	Part No.
i	TC..325..	0.375	0.156	0.016	**TCGT16T304**
m	TC..16T3..	9.53	3.97	0.40	**TCGT16T304**

B20: 58 - 59
Key on B20: 1
B20: 54 - 55

i = Imperial (in)
m = Metric (mm)
Inserts sold separately

NEED VERSATILITY?
NO PROBLEM.

CB Style
Versatile Boring

Wide range of diameters produced with a single boring head

Allows for 0.001" adjustment on bore diameter and 0.000050" with CB2500BMA

Maximum toughness and maximum versatility

CB2500BMA Micro-adjusting Versatile Boring Head

Bore Diameter Range: 0.250" - 3.125"

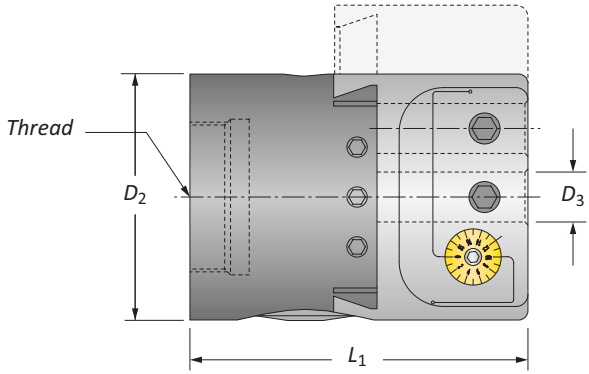

	Boring Range	Thread Connection	Boring Head L_1	Boring Head D_2	Boring Head D_3	Weight	Part No.
i	0.250 - 3.125	1½ - 18	3.375	2.500	0.500	3.400 (lbs)	**CB2500BMA**

IMPORTANT: Wax covered gib screws are factory set and should not be removed. Adjustment of these screws will cause performance issues.
Imperial (in) = 0.00005" adjustment on diameter.
NOTE: Max spindle speed: 2,000 RPM at 0 radial offset.

B20: 58 - 59
Key on B20: 1
B20: 46 - 50
B20: 44 - 45
B20: 54 - 55

i = Imperial (in)
m = Metric (mm)
Inserts sold separately

IMPORTANT: Max spindle speed refers to maximum possible speed for individual boring head and is not a recommended parameter. Refer to page B20: 58 for recommended application specific parameters. Factory technical assistance is available for your specific applications through our Application Engineering department.
ext: **7611** | *email:* **appeng@alliedmachine.com**

Boring Bars

Bore Diameter Range: 0.250" - 3.125"

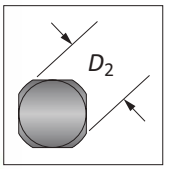

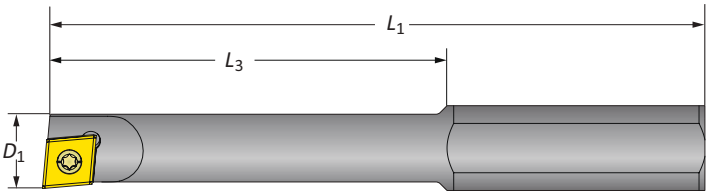

Steel Boring Bars | Bore Diameter Range: 0.250" - 3.125"

	Min. Boring Diameter	Boring Bar					
	D_1	L_3	L_1	D_2	Weight	Insert Form	Part No.
	0.250	1.062	2.500	0.500	0.080 (lbs)	WBGX0301..	**0250B**
	0.312	1.437	2.750	0.500	0.080 (lbs)	WBGX0301..	**0312B**
i	0.375	1.750	3.062	0.500	0.100 (lbs)	WBGX0301..	**0375B**
	0.437	2.062	3.375	0.500	0.110 (lbs)	CC..215..	**0437B**
	0.500	2.187	3.500	0.500	0.140 (lbs)	CC..215..	**0500B**

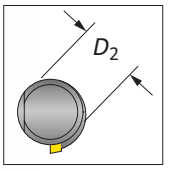

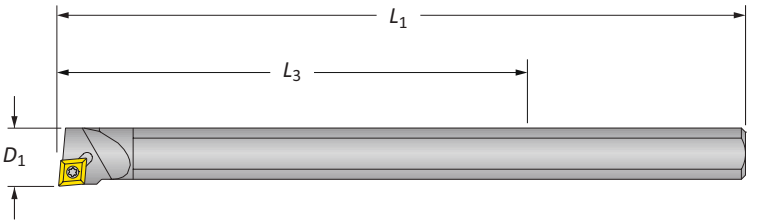

Heavy Metal Boring Bars | Bore Diameter Range: 0.365" - 3.125"

	Min. Boring Diameter	Boring Bar					
	D_1	L_3	L_1	D_2	Weight	Insert Form	Part No.
i	0.365	2.250	4.000	0.312*	0.080 (lbs)	CC..215..	**0365HM**
	0.550	3.250	6.000	0.500	0.300 (lbs)	CC..215..	**0550BHM**

*Reducing sleeve required.

Reducing Sleeves

	Reducing Sleeve					
	D_3	D_2	L_1	L_3	Weight	Part No.
i	0.312	0.500	1.312	–	0.040 (lbs)	**BTH-03120500**
	0.375	0.500	1.312	–	0.030 (lbs)	**BTH-03750500**

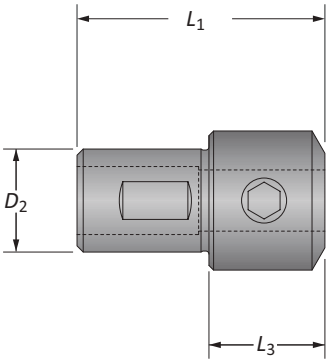

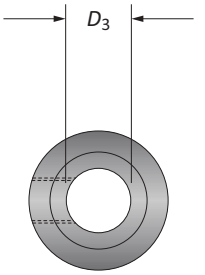

B20: 58 - 59
Key on B20: 1

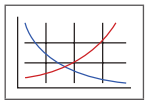

B20: 54 - 55

i = Imperial (in)
m = Metric (mm)

Boring Bar | Boring Inserts

Bore Diameter Range: 0.625" - 3.125"

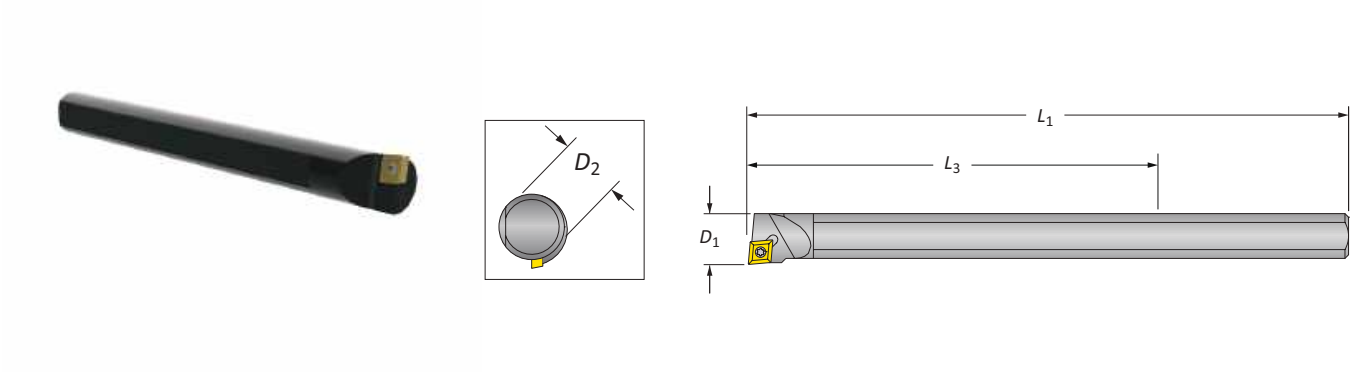

Carbide Boring Bar

	Min. Boring Diameter	Boring Bar					
	D_1	L_3	L_1	D_2	Weight	Insert Form	Part No.
i	0.625	4.500	8.000	0.500	0.410 (lbs)	CC..215..	**0625BCS**

Coated Trigon Insert

		Insert	
	Insert Form	R_1	Part No.
i	WBGX0301..	0.004	**WBGX030101**

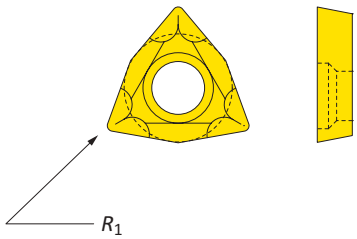

Coated 80° Diamond Inserts

		Insert			
	Insert Form	*IC*	T_1	R_1	Part No.
i	CC..215..	0.250	0.094	0.008	**CCMT060202**
	CC..215..	0.250	0.094	0.016	**CCMT060204**
	CC..215..	0.250	0.094	0.031	**CCMT060208**

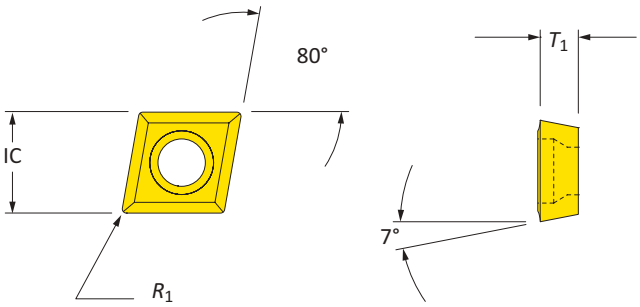

B20: 58 - 59
Key on B20: 1
B20: 54 - 55

i = Imperial (in)
m = Metric (mm)
Inserts sold separately

CB202B Versatile Boring Head

Bore Diameter Range: 0.250" - 6.687"

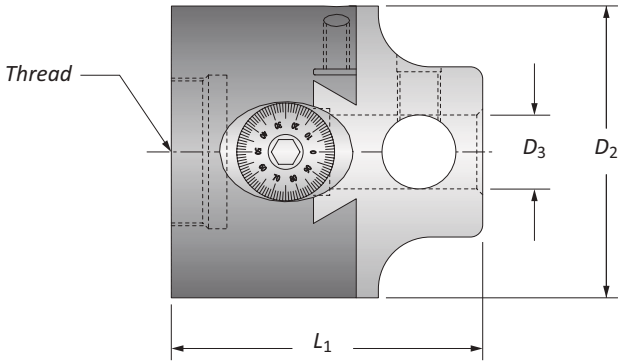

	Boring Range	Thread Connection	Boring Head L_1	Boring Head D_2	Boring Head D_3	Weight	Part No.
i	0.250 - 6.687	⅞ - 20	2.435	2.000	0.500	1.600 (lbs)	**CB202B**

IMPORTANT: Wax covered gib screws are factory set and should not be removed. Adjustment of these screws will cause performance issues.
NOTICE: Cross hole bars should always be secured in the bar holder with at least two set screws.
Imperial (in) = 0.001" adjustment on diameter.
NOTE: Max spindle speed: 2,500 RPM at 0 radial offset.

B20: 58 - 59
B20: 46 - 50
B20: 44 - 45
B20: 54 - 55
Key on B20: 1

i = Imperial (in)
m = Metric (mm)

IMPORTANT: Max spindle speed refers to maximum possible speed for individual boring head and is not a recommended parameter. Refer to page B20: 58 for recommended application specific parameters. Factory technical assistance is available for your specific applications through our Application Engineering department.
ext: **7611** | *email:* **appeng@alliedmachine.com**

Boring Bars

Bore Diameter Range: 0.250" - 3.000"

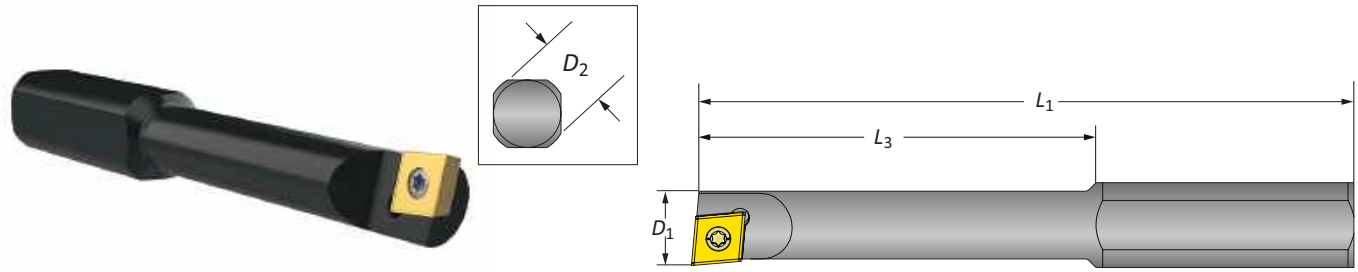

Steel Boring Bars | Bore Diameter Range: 0.250" - 3.000"

Min. Boring Diameter	Boring Bar					
D_1	L_3	L_1	D_2	Weight	Insert Form	Part No.
0.250	1.062	2.500	0.500	0.080 (lbs)	WBGX0301..	**0250B**
0.312	1.437	2.750	0.500	0.080 (lbs)	WBGX0301..	**0312B**
0.375	1.750	3.062	0.500	0.100 (lbs)	WBGX0301..	**0375B**
0.437	2.062	3.375	0.500	0.110 (lbs)	CC..215..	**0437B**
0.500	2.187	3.500	0.500	0.140 (lbs)	CC..215..	**0500B**

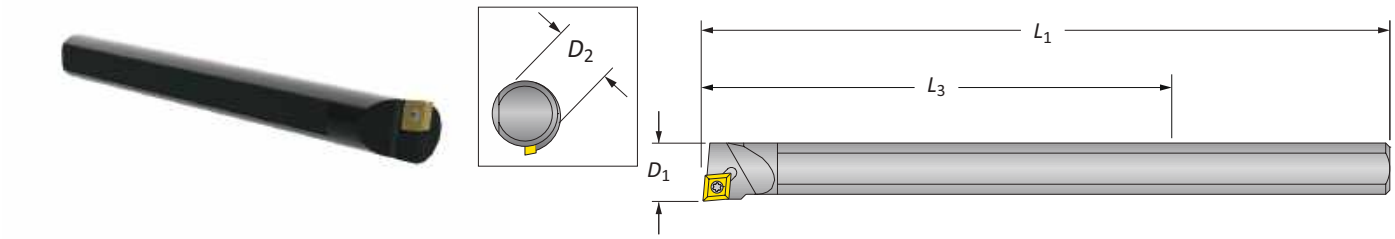

Heavy Metal Boring Bars | Bore Diameter Range: 0.365" - 3.000"

Min. Boring Diameter	Boring Bar					
D_1	L_3	L_1	D_2	Weight	Insert Form	Part No.
0.365	2.250	4.000	0.312*	0.080 (lbs)	CC..215..	**0365HM**
0.550	3.250	6.000	0.500	0.300 (lbs)	CC..215..	**0550BHM**

*Reducing sleeve required.

Carbide Boring Bar | Bore Diameter Range: 0.625" - 3.000"

Min. Boring Diameter	Boring Bar					
D_1	L_3	L_1	D_2	Weight	Insert Form	Part No.
0.625	4.500	8.000	0.500	0.410 (lbs)	CC..215..	**0625BCS**

Reducing Sleeves

Reducing Sleeve					
D_3	D_2	L_1	L_3	Weight	Part No.
0.312	0.500	1.312	–	0.040 (lbs)	**BTH-03120500**
0.375	0.500	1.312	–	0.030 (lbs)	**BTH-03750500**

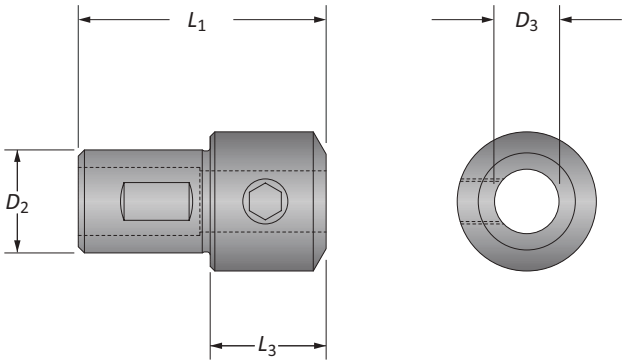

B20: 58 - 59
Key on B20: 1
B20: 54 - 55

= Imperial (in)
= Metric (mm)

Boring Bar

Bore Diameter Range: 2.875" - 6.687"

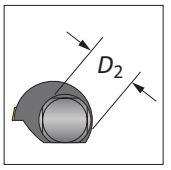

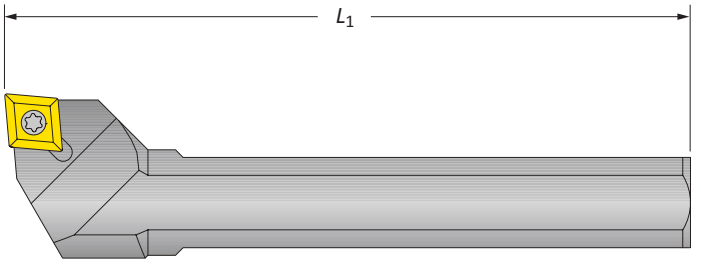

	Min. Boring Diameter	Boring Bar* L_1	Boring Bar* D_2	Weight	Insert Form	Part No.
i	2.875	2.750	0.500	0.140 (lbs)	CC..215..	**0500BCH**

***NOTICE:** Cross hole bars should always be secured in the bar holder with at least two set screws.

B20: 58 - 59
Key on B20: 1
B20: 54 - 55

i = Imperial (in)
m = Metric (mm)
Inserts sold separately

Boring Inserts

80° Diamond Insert | 60° Triangle Insert

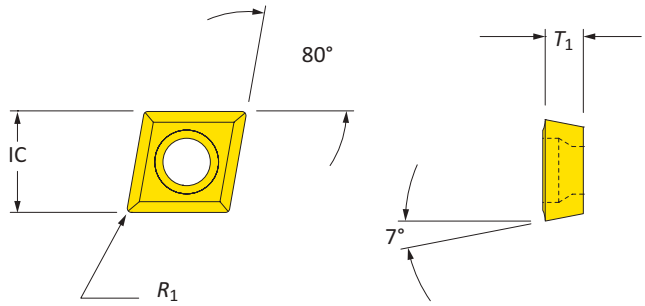

Coated 80° Diamond Inserts

	Insert Form	Insert IC	Insert T_1	Insert R_1	Part No.
	CC..215..	0.250	0.094	0.008	**CCMT060202**
ⓘ	CC..215..	0.250	0.094	0.016	**CCMT060204**
	CC..215..	0.250	0.094	0.031	**CCMT060208**

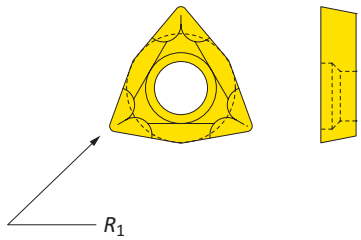

Coated Trigon Insert

	Insert Form	Insert R_1	Part No.
ⓘ	WBGX0301..	0.004	**WBGX030101**

B20: 58 - 59
Key on B20: 1
B20: 54 - 55

ⓘ = Imperial (in)
ⓜ = Metric (mm)
Inserts sold separately

CB203D Versatile Boring Head

Bore Diameter Range: 0.250" - 11.000"

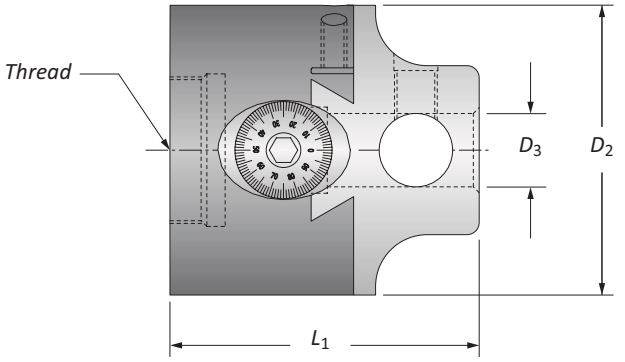

	Boring Range	Thread Connection	Boring Head L_1	Boring Head D_2	Boring Head D_3	Weight	Part No.
i	0.250 - 11.000	1½ - 18	3.166	3.000	0.750	4.700 (lbs)	**CB203D**

IMPORTANT: Wax covered gib screws are factory set and should not be removed. Adjustment of these screws will cause performance issues.
NOTICE: Cross hole bars should always be secured in the bar holder with at least two set screws.
Imperial (in) = 0.001" adjustment on diameter.
NOTE: Max spindle speed: 1,750 RPM at 0 radial offset.

B20: 58 - 59 | B20: 46 - 50 | B20: 44 - 45 | B20: 54 - 55
Key on B20: 1

i = Imperial (in)
m = Metric (mm)
Inserts sold separately

IMPORTANT: Max spindle speed refers to maximum possible speed for individual boring head and is not a recommended parameter. Refer to page B20: 58 for recommended application specific parameters. Factory technical assistance is available for your specific applications through our Application Engineering department.
ext: **7611** | *email:* **appeng@alliedmachine.com**

⚠ WARNING **Exceeding weight capacity for machine tool spindle and tool changer can cause machine damage and/or serious injury. To prevent:**
- Refer to page B20: 57 to see formula for calculating weight of tool assembly.
- Consult machine tool builder for machine's weight limitations.

Factory technical assistance is also available for specific applications through our Application Engineering department. *ext:* **7611** | *email:* **appeng@alliedmachine.com**

Boring Bars

Bore Diameter Range: 0.250" - 5.125"

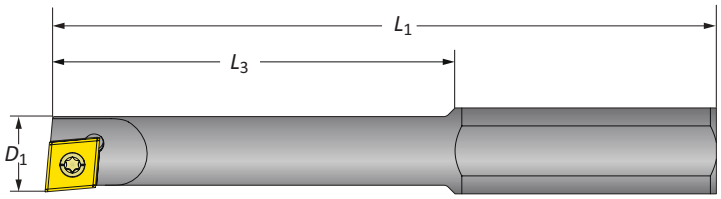

Steel Boring Bars | Bore Diameter Range: 0.250" - 5.125"

Min. Boring Diameter	Boring Bar					
D_1	L_3	L_1	D_2	Weight	Insert Form	Part No.
0.250	1.062	2.500	0.500*	0.080 (lbs)	WBGX0301..	**0250B**
0.312	1.437	2.570	0.500*	0.080 (lbs)	WBGX0301..	**0312B**
0.375	1.750	3.062	0.500*	0.100 (lbs)	WBGX0301..	**0375B**
0.437	2.062	3.375	0.500*	0.110 (lbs)	CC..215..	**0437B**
0.500	2.500	4.250	0.750	0.280 (lbs)	CC..215..	**0500D**
0.750	3.000	4.687	0.750	0.430 (lbs)	CC..325..	**0750D**
1.000	3.500	5.125	0.750	0.570 (lbs)	CC..325..	**1000D**
1.250	4.000	5.562	0.750	0.570 (lbs)	CC..325..	**1250D**

*Reducing sleeve required.

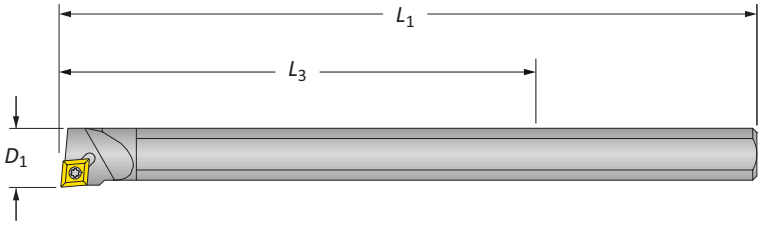

Heavy Metal Boring Bars | Bore Diameter Range: 0.425" - 4.250"

Min. Boring Diameter	Boring Bar					
D_1	L_3	L_1	D_2	Weight	Insert Form	Part No.
0.425	2.250	4.000	0.375*	0.110 (lbs)	CC..215..	**0425BHM**
0.550	3.250	6.000	0.500*	0.300 (lbs)	CC..215..	**0550BHM**
0.688	4.250	8.000	0.625*	0.630 (lbs)	CC..325..	**0688CHM**
0.832	4.750	10.000	0.750	1.150 (lbs)	CC..325..	**0832DHM**

*Reducing sleeve required.

Reducing Sleeves

Reducing Sleeve					
D_3	D_2	L_1	L_3	Weight	Part No.
0.375	0.750	2.406	–	0.190 (lbs)	**BTH-03750750**
0.500	0.750	2.406	0.910	0.040 (lbs)	**BTH-05000750**
0.625	0.750	1.500	–	0.060 (lbs)	**BTH-06250750**

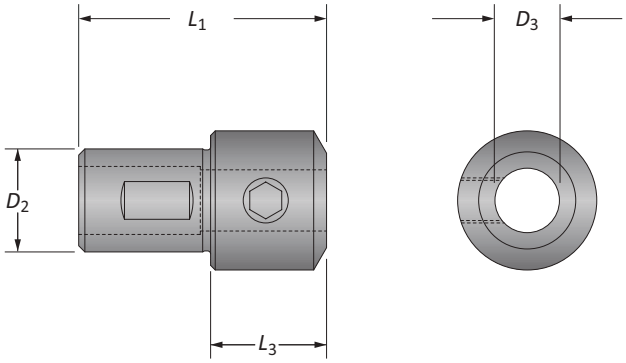

B20: 58 - 59
Key on B20: 1
B20: 54 - 55

= Imperial (in)
= Metric (mm)
Inserts sold separately

Carbide Boring Bars

Bore Diameter Range: 0.625" - 4.250"

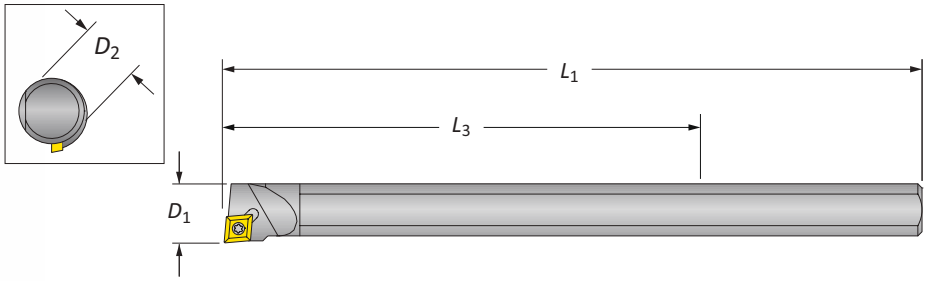

Carbide Boring Bars

	Min. Boring Diameter	Boring Bar					
	D_1	L_3	L_1	D_2	Weight	Insert Form	Part No.
i	0.625	4.500	8.000	0.500*	0.410 (lbs)	CC..215..	**0625BCS**
	0.875	6.000	10.000	0.750	1.130 (lbs)	CC..325..	**0875DCS**

*Reducing sleeve required.

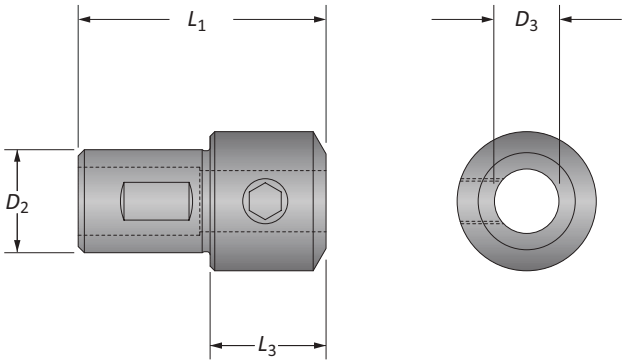

Reducing Sleeve

	Reducing Sleeve					
	D_3	D_2	L_1	L_3	Weight	Part No.
i	0.500	0.750	2.406	0.910	0.040 (lbs)	**BTH-05000750**

B20: 58 - 59
Key on B20: 1
B20: 54 - 55

i = Imperial (in)
m = Metric (mm)
Inserts sold separately

Cross Hole Boring Bar | Boring Inserts

Bore Diameter Range: 4.937" - 11.000"

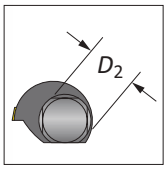

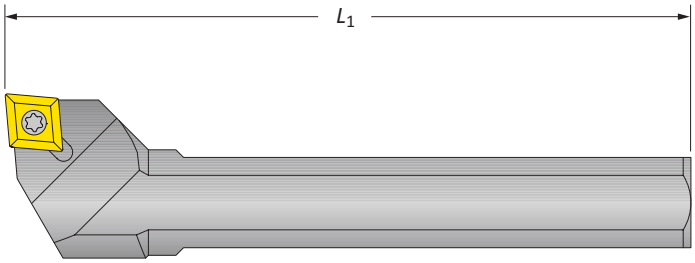

Cross Hole Boring Bar

	Min. Bore Diameter	Boring Bar* L_1	Boring Bar* D_2	Weight	Insert Form	Part No.
i	4.937	4.750	0.750	0.550 (lbs)	CC..325..	**0750DCH**

***NOTICE:** Cross hole bars should always be secured in the bar holder with at least two set screws.

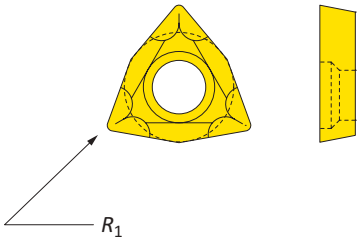

Coated Trigon Insert

	Insert Form	Insert R_1	Part No.
i	WBGX0301...	0.004	**WBGX030101**

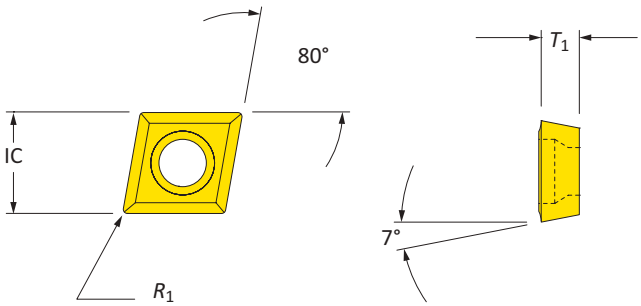

Coated 80° Diamond Inserts

	Insert Form	Insert IC	Insert T_1	Insert R_1	Part No.
i	CC..215..	0.250	0.094	0.008	**CCMT060202**
	CC..215..	0.250	0.094	0.016	**CCMT060204**
	CC..215.	0.250	0.094	0.031	**CCMT060208**
	CC..325...	0.375	0.156	0.008	**CCMT09T302**
	CC..325..	0.375	0.156	0.016	**CCMT09T304**
	CC..325..	0.375	0.156	0.031	**CCMT09T308**

B20: 58 - 59
Key on B20: 1
B20: 54 - 55

i = Imperial (in)
m = Metric (mm)
Inserts sold separately

CB204E Versatile Boring Head

Bore Diameter Range: 0.500" - 13.437"

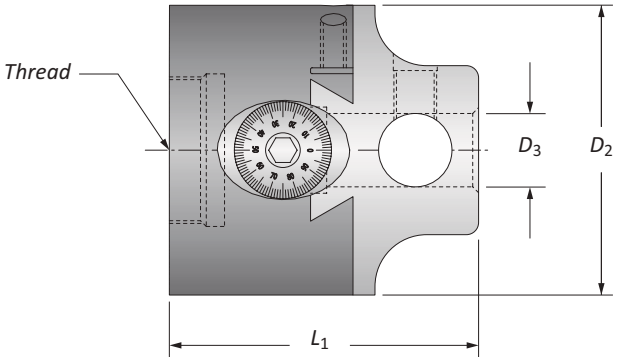

	Boring Range	Thread Connection	Boring Head L_1	Boring Head D_2	Boring Head D_3	Weight	Part No.
i	0.500 - 13.437	1½ - 18	3.715	4.000	1.000	9.300 (lbs)	**CB204E**

IMPORTANT: Wax covered gib screws are factory set and should not be removed. Adjustment of these screws will cause performance issues.
NOTICE: Cross hole bars should always be secured in the bar holder with at least two set screws.
Imperial (in) = 0.001" adjustment on diameter.
NOTE: Max spindle speed: 800 RPM at 0 radial offset.

B20: 58 - 59 B20: 46 - 50 B20: 44 - 45 B20: 54 - 55
Key on B20: 1

i = Imperial (in)
m = Metric (mm)

IMPORTANT: Max spindle speed refers to maximum possible speed for individual boring head and is not a recommended parameter. Refer to page B20: 58 for recommended application specific parameters. Factory technical assistance is available for your specific applications through our Application Engineering department.
ext: **7611** | *email:* **appeng@alliedmachine.com**

WARNING **Exceeding weight capacity for machine tool spindle and tool changer can cause machine damage and/or serious injury. To prevent:**
- Refer to page B20: 57 to see formula for calculating weight of tool assembly.
- Consult machine tool builder for machine's weight limitations.

Factory technical assistance is also available for specific applications through our Application Engineering department. *ext:* **7611** | *email:* **appeng@alliedmachine.com**

Boring Bars

Bore Diameter Range: 0.500" - 5.750"

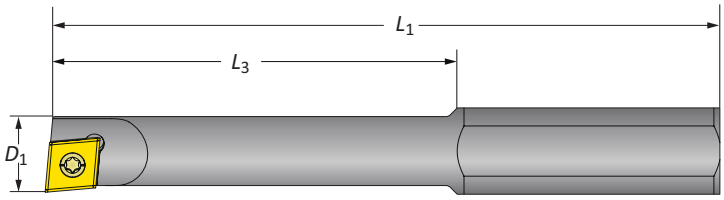

Steel Boring Bars | Bore Diameter Range: 0.500" - 5.750"

	Min. Boring Diameter	Boring Bar					
	D_1	L_3	L_1	D_2	Weight	Insert Form	Part No.
	0.500	2.500	4.250	0.750*	0.280 (lbs)	CC..215..	**0500D**
	0.750	3.000	4.687	0.750*	0.430 (lbs)	CC..325..	**0750D**
	1.000	3.500	5.125	0.750*	0.510 (lbs)	CC..325..	**1000D**
	1.250	4.000	5.562	0.750*	0.570 (lbs)	CC..325..	**1250D**

*Reducing sleeve required.

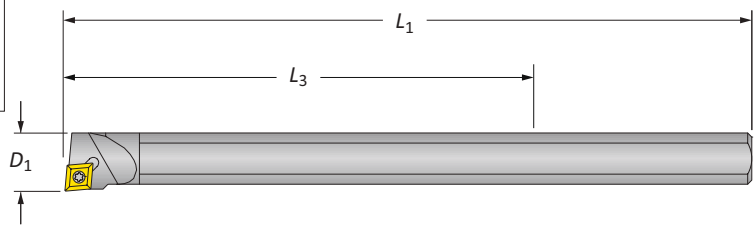

Heavy Metal Boring Bar | Bore Diameter Range: 0.832" - 5.125"

	Min. Boring Diameter	Boring Bar					
	D_1	L_3	L_1	D_2	Weight	Insert Form	Part No.
	0.832	4.750	10.000	0.750*	1.150 (lbs)	CC..325..	**0832DHM**

*Reducing sleeve required.

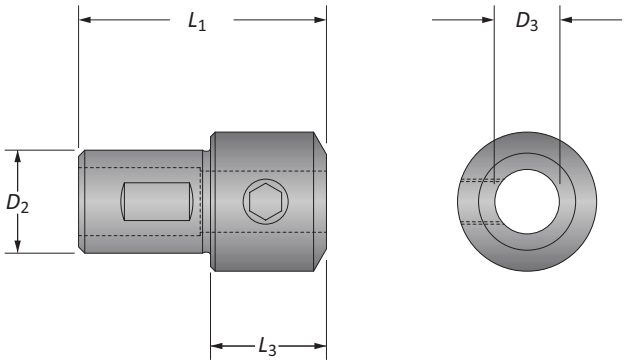

Reducing Sleeve

	Reducing Sleeve					
	D_3	D_2	L_1	L_3	Weight	Part No.
	0.750	1.000	2.405	1.125	0.400 (lbs)	**BTH-07501000**

B20: 58 - 59
Key on B20: 1
B20: 54 - 55

= Imperial (in)
= Metric (mm)

Inserts sold separately

Boring Bars

Bore Diameter Range: 0.875" - 5.125"

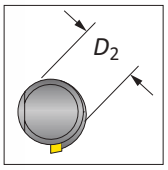

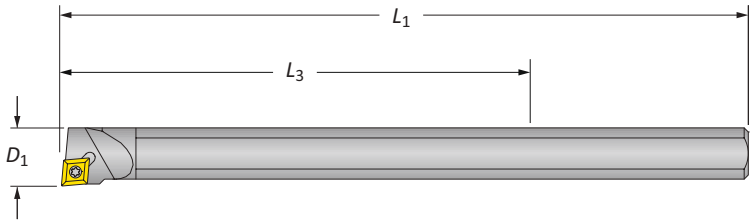

Carbide Boring Bar

	Min. Boring Diameter	Boring Bar					
	D_1	L_3	L_1	D_2	Weight	Insert Form	Part No.
i	0.875	6.000	10.000	0.750*	1.130 (lbs)	CC..325..	**0875DCS**

*Reducing sleeve required.

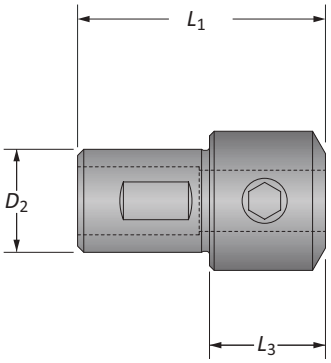

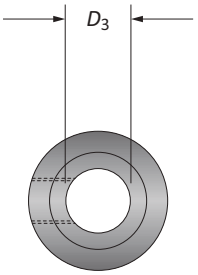

Reducing Sleeve

	Reducing Sleeve					
	D_3	D_2	L_1	L_3	Weight	Part No.
i	0.750	1.000	2.405	1.125	0.400 (lbs)	**BTH-07501000**

B20: 58 - 59
Key on B20: 1
B20: 54 - 55

i = Imperial (in)
m = Metric (mm)
Inserts sold separately

Cross Hole Boring Bar | Boring Inserts

Bore Diameter Range: 5.625" - 13.437"

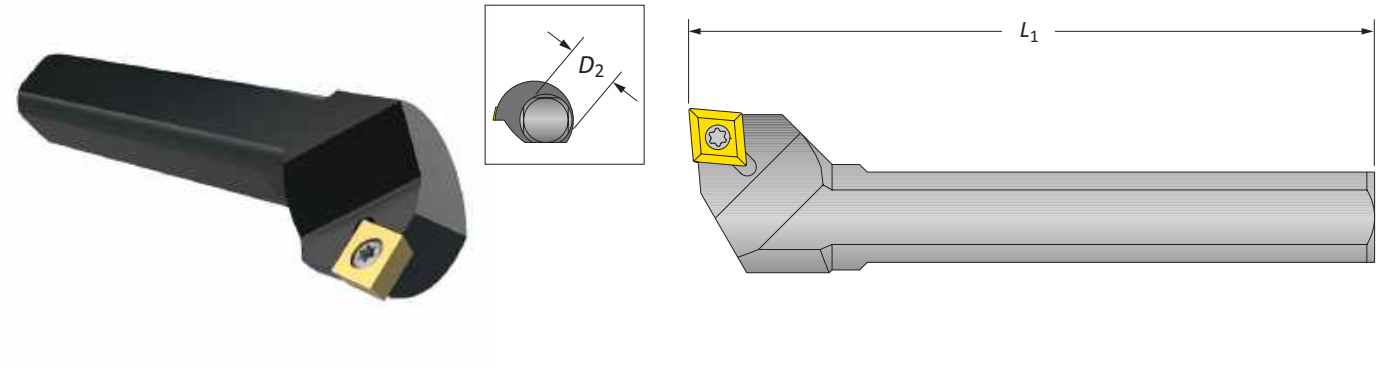

Cross Hole Boring Bar

	Min Boring Diameter	Boring Bar* L_1	Boring Bar* D_2	Weight	Insert Form	Part No.
i	5.625	5.310	1.000	1.020 (lbs)	CC..325..	**1000ECH**

***NOTICE:** Cross hole bars should always be secured in the bar holder with at least two set screws.

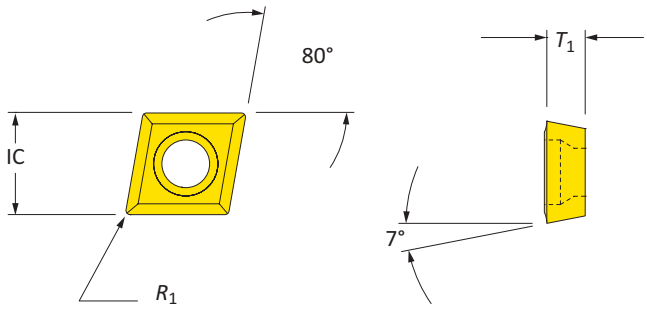

Coated 80° Diamond Inserts

	Insert Form	Insert *IC*	Insert T_1	Insert R_1	Part No.
	CC..215..	0.250	0.094	0.008	**CCMT060202**
	CC..215..	0.250	0.094	0.016	**CCMT060204**
i	CC..215..	0.250	0.094	0.031	**CCMT060208**
	CC..325..	0.375	0.156	0.008	**CCMT09T302**
	CC..325..	0.375	0.156	0.016	**CCMT09T304**
	CC..325..	0.375	0.156	0.031	**CCMT09T308**

B20: 58 - 59
Key on B20: 1
B20: 54 - 55

i = Imperial (in)
m = Metric (mm)
Inserts sold separately

CB206F Versatile Boring Head

Bore Diameter Range: 0.500" - 21.500"

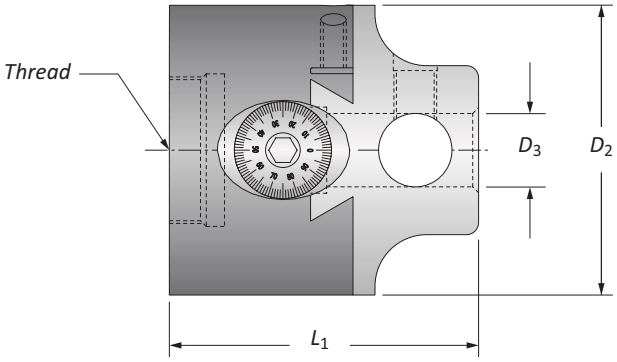

	Boring Range	Thread Connection	Boring Head L_1	Boring Head D_2	Boring Head D_3	Weight	Part No.
i	0.500 - 21.500	2 ¼ - 10	5.475	6.000	1.500	26.400 (lbs)	**CB206F**

IMPORTANT: Wax covered gib screws are factory set and should not be removed. Adjustment of these screws will cause performance issues.
NOTICE: Cross hole bars should always be secured in the bar holder with at least two set screws.
Imperial (in) = 0.001" adjustment on diameter.
NOTE: Max spindle speed: 500 RPM at 0 radial offset.

B20: 58 - 59
Key on B20: 1
B20: 46 - 50
B20: 44 - 45
B20: 54 - 55

i = Imperial (in)
m = Metric (mm)

IMPORTANT: Max spindle speed refers to maximum possible speed for individual boring head and is not a recommended parameter. Refer to page B20: 58 for recommended application specific parameters. Factory technical assistance is available for your specific applications through our Application Engineering department.
ext: **7611** | *email:* **appeng@alliedmachine.com**

WARNING **Exceeding weight capacity for machine tool spindle and tool changer can cause machine damage and/or serious injury. To prevent:**
- Refer to page B20: 57 to see formula for calculating weight of tool assembly.
- Consult machine tool builder for machine's weight limitations.

Factory technical assistance is also available for specific applications through our Application Engineering department. *ext:* **7611** | *email:* **appeng@alliedmachine.com**

Boring Bars

Bore Diameter Range: 0.500" - 9.125"

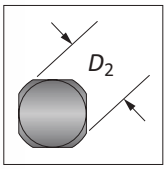

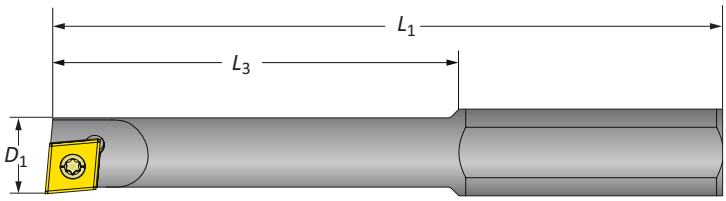

Steel Boring Bars | Bore Diameter Range: 0.500" - 9.125"

Min. Boring Diameter	Boring Bar					
D_1	L_3	L_1	D_2	Weight	Insert Form	Part No.
0.500	2.500	4.250	0.750*	0.280 (lbs)	CC..215..	**0500D**
0.750	3.000	4.687	0.750*	0.430 (lbs)	CC..325..	**0750D**
1.000	3.500	5.125	0.750*	0.510 (lbs)	CC..325..	**1000D**
1.250	4.000	5.562	0.750*	0.570 (lbs)	CC..325..	**1250D**

*Reducing sleeve required.

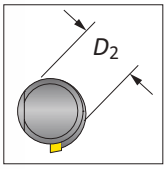

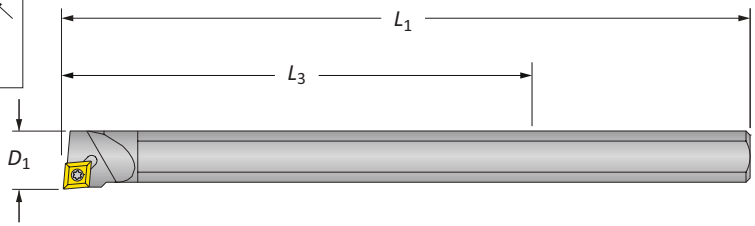

Heavy Metal Boring Bar | Bore Diameter Range: 0.832" - 7.125"

Min. Boring Diameter	Boring Bar					
D_1	L_3	L_1	D_2	Weight	Insert Form	Part No.
0.832	4.750	10.000	0.750*	1.150 (lbs)	CC..325..	**0832DHM**

*Reducing sleeve required.

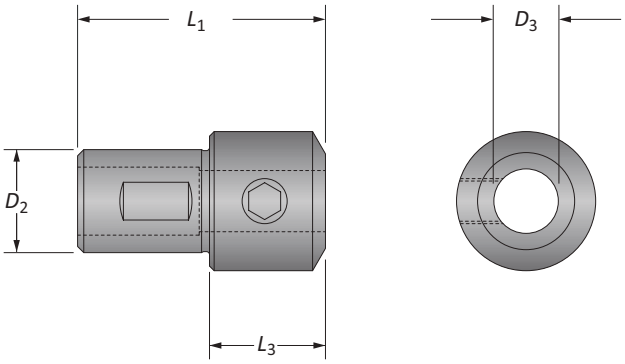

Reducing Sleeve

Reducing Sleeve					
D_3	D_2	L_1	L_3	Weight	Part No.
0.750	1.500	3.000	1.000	1.400 (lbs)	**BTH-07501500**

B20: 58 - 59
Key on B20: 1
B20: 54 - 55

ⓘ = Imperial (in)
ⓜ = Metric (mm)
Inserts sold separately

Carbide Boring Bar

Bore Diameter Range: 0.875" - 7.125"

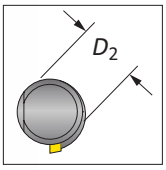

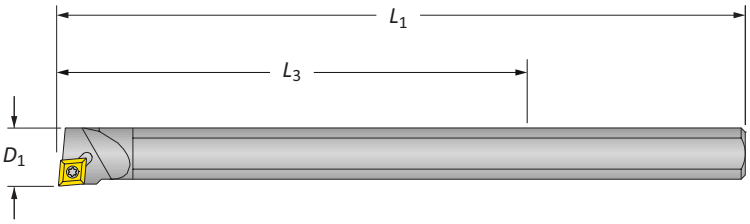

Carbide Boring Bar

	Min. Boring Diameter	Boring Bar					
	D_1	L_3	L_1	D_2	Weight	Insert Form	Part No.
i	0.875	6.000	10.000	0.750*	1.130 (lbs)	CC..325..	**0875DCS**

*Reducing sleeve required.

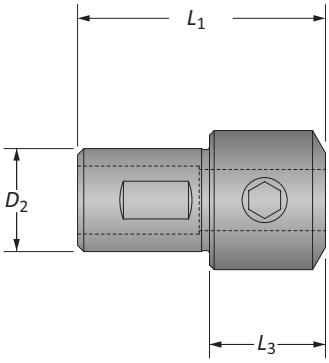

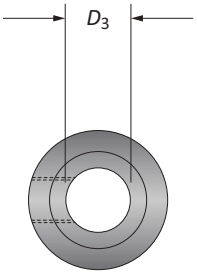

Reducing Sleeve

	Reducing Sleeve					
	D_3	D_2	L_1	L_3	Weight	Part No.
i	0.750	1.500	3.000	1.000	1.400 (lbs)	**BTH-07501500**

B20: 58 - 59
Key on B20: 1
B20: 54 - 55

i = Imperial (in)
m = Metric (mm)
Inserts sold separately

Cross Hole Boring Bar | Boring Inserts

Bore Diameter Range: 9.093" - 21.500"

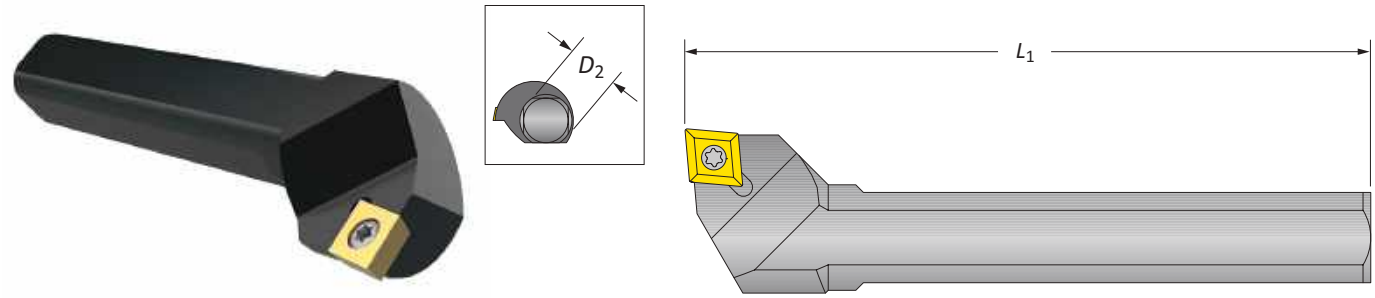

Cross Hole Boring Bar

	Min. Boring Diameter	Boring Bar* L_1	Boring Bar* D_2	Weight	Insert Form	Part No.
i	9.093	9.125	1.500	4.130 (lbs)	CC..43..	**1500FCH**

***NOTICE:** Cross hole bars should always be secured in the bar holder with at least two set screws.

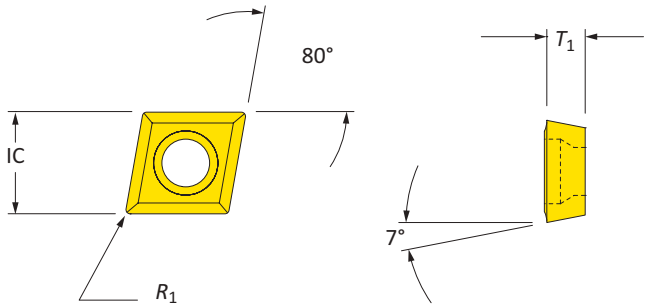

Coated 80° Diamond Inserts

	Insert Form	Insert *IC*	Insert T_1	Insert R_1	Part No.
	CC..215..	0.250	0.094	0.008	**CCMT060202**
	CC..215..	0.250	0.091	0.016	**CCMT060204**
	CC..215..	0.250	0.094	0.031	**CCMT060208**
i	CC..325..	0.375	0.156	0.008	**CCMT09T302**
	CC..325..	0.375	0.156	0.016	**CCMT09T304**
	CC..325..	0.375	0.156	0.031	**CCMT09T308**
	CC..43..	0.500	0.188	0.031	**CCMT120408**

B20: 58 - 59
Key on B20: 1
B20: 54 - 55

i = Imperial (in)
m = Metric (mm)
Inserts sold separately

Intermediate Modules

Reducers

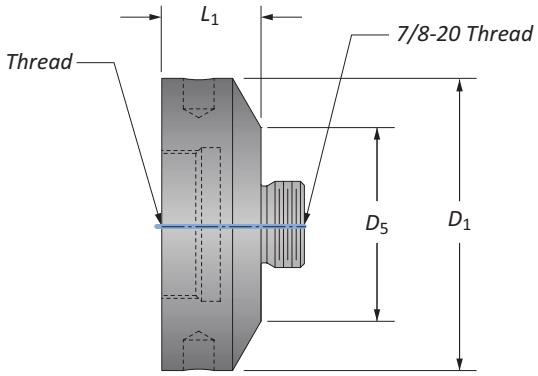

	Reducer					
	D_1	D_5	L_1	Weight	Thread	Part No.
	1.500	1.000	1.000	0.440 (lbs)	⅞ - 20	**CB1500-IRCB1000**
	1.500	1.250	1.000	0.450 (lbs)	⅞ - 20	**CB1500-IRCB1250**
	2.000	1.000	1.000	0.720 (lbs)	⅞ - 20	**CB2000-IRCB1000**
	2.000	1.250	1.000	0.760 (lbs)	⅞ - 20	**CB2000-IRCB1250**
ⓘ	2.000	1.500	1.000	0.800 (lbs)	⅞ - 20	**CB2000-IRCB1500**
	3.000	1.000	1.250	1.610 (lbs)	1½ - 18	**CB3000-IRCB1000**
	3.000	1.250	1.250	1.750 (lbs)	1½ - 18	**CB3000-IRCB1250**
	3.000	1.500	1.250	1.840 (lbs)	1½ - 18	**CB3000-IRCB1500**
	3.000	2.000	1.250	2.020 (lbs)	1½ - 18	**CB3000-IRCB2000**

B20: 58 - 59
Key on B20: 1
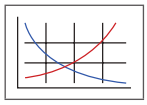
B20: 54 - 55

B20: 46 - 50
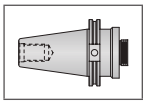
B20: 14
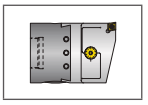
B20: 24 - 43
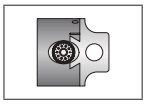

ⓘ = Imperial (in)
ⓜ = Metric (mm)

⚠ WARNING **Exceeding weight capacity for machine tool spindle and tool changer can cause machine damage and/or serious injury. To prevent:**
- Refer to page B20: 57 to see formula for calculating weight of tool assembly.
- Consult machine tool builder for machine's weight limitations.

Factory technical assistance is also available for specific applications through our Application Engineering department. *ext:* **7611** | *email:* **appeng@alliedmachine.com**

⚠ WARNING **Tool failure can cause serious injury. To prevent:**
- Do not exceed recommended 9xD length-to-diameter ratio or exceed 4 total components (including shank)
- Refer to example on page B20: 56 for calculating length to diameter ratio

Factory technical assistance is available for your specific applications through our Application Engineering department. *ext:* **7611** | *email:* **appeng@alliedmachine.com**

Intermediate Modules

Extensions

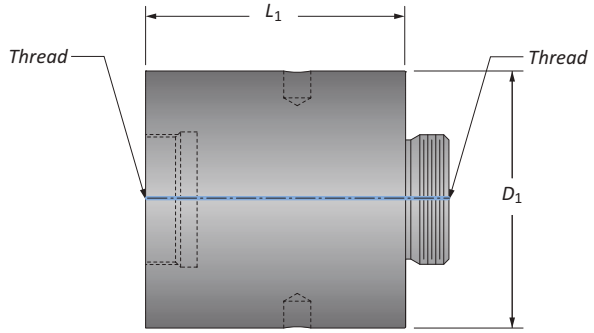

Extension				
D_1	L_1	Weight	Thread	Part No.
1.000	1.000	0.190 (lbs)	⅞ - 20	**CB1000-IA1000**
1.000	2.000	0.390 (lbs)	⅞ - 20	**CB1000-IA2000**
1.250	1.250	0.390 (lbs)	⅞ - 20	**CB1250-IA1250**
1.250	2.500	0.800 (lbs)	⅞ - 20	**CB1250-IA2500**
1.500	1.500	0.700 (lbs)	⅞ - 20	**CB1500-IA1500**
1.500	3.000	1.410 (lbs)	⅞ - 20	**CB1500-IA3000**
2.000	2.000	1.660 (lbs)	⅞ - 20	**CB2000-IA2000**
2.000	4.000	3.350 (lbs)	⅞ - 20	**CB2000-IA4000**
3.000	3.000	5.730 (lbs)	1½ - 18	**CB3000-IA3000**
3.000	6.000	11.500 (lbs)	1½ - 18	**CB3000-IA6000**

Key on B20: 1

B20: 58 - 59

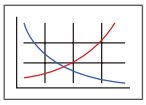

B20: 54 - 55

B20: 46 - 50

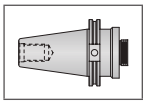

B20: 14

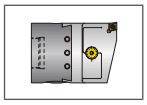

B20: 24 - 43

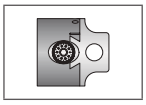

ⓘ = Imperial (in)
ⓜ = Metric (mm)

⚠ WARNING **Exceeding weight capacity for machine tool spindle and tool changer can cause machine damage and/or serious injury. To prevent:**
- Refer to page B20: 57 to see formula for calculating weight of tool assembly.
- Consult machine tool builder for machine's weight limitations.

Factory technical assistance is also available for specific applications through our Application Engineering department. *ext:* **7611** | *email:* **appeng@alliedmachine.com**

⚠ WARNING **Tool failure can cause serious injury. To prevent:**
- Do not exceed recommended 9xD length-to-diameter ratio or exceed 4 total components (including shank)
- Refer to example on page B20: 56 for calculating length to diameter ratio

Factory technical assistance is available for your specific applications through our Application Engineering department. *ext:* **7611** | *email:* **appeng@alliedmachine.com**

Criterion Master Shanks

CAT 40/50 | BT Flange

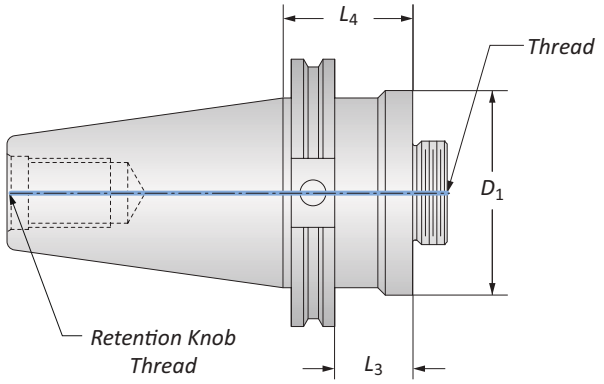

CAT 40/50 Shanks

Style	D_1	Shank L_3	L_4	Weight	Thread	Retention Knob Thread	Part No.
CAT40	1.500	0.370	1.770	2.490 (lbs)	⅞ - 20	⅝ - 11	**CB1500-CV40**
CAT40	2.000	1.130	1.880	2.700 (lbs)	⅞ - 20	⅝ - 11	**CB2000-CV40**
CAT40	2.500	1.130	1.880	3.120 (lbs)	1½ - 18	⅝ - 11	**CB2500-CV40**
CAT40	3.000	1.180	1.880	3.410 (lbs)	1½ - 18	⅝ - 11	**CB3000-CV40**
CAT50	1.500	0.370	1.770	7.120 (lbs)	⅞ - 20	1 - 8	**CB1500-CV50**
CAT50	2.000	1.130	1.880	7.330 (lbs)	⅞ - 20	1 - 8	**CB2000-CV50**
CAT50	2.500	1.130	1.880	7.740 (lbs)	1½ - 18	1 - 8	**CB2500-CV50**
CAT50	3.000	1.130	1.880	8.030 (lbs)	1½ - 18	1 - 8	**CB3000-CV50**
CAT50	3.380	1.380	2.130	9.440 (lbs)	2¼ - 10	1 - 8	**CB6000-CV50**

NOTE: Taper ground to AT3 tolerance.

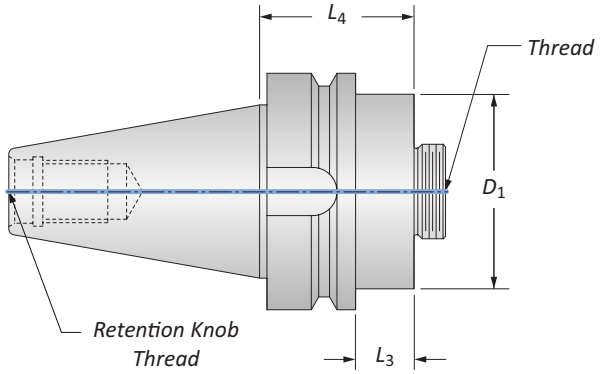

BT Flange Shanks

Style	D_1	Shank L_3	L_4	Weight	Thread	Retention Knob Thread	Part No.
BT30	1.500	0.900	1.770	1.360 (lbs)	⅞ - 20	M12 x 1.75	**CB1500-BT30**
BT40	1.500	0.710	1.770	2.540 (lbs)	⅞ - 20	M16 x 2	**CB1500-BT40**
BT40	2.000	0.500	1.560	2.620 (lbs)	⅞ - 20	M16 x 2	**CB2000-BT40**
BT40	2.500	0.870	2.060	3.690 (lbs)	1½ - 18	M16 x 2	**CB2500-BT40**
BT40	3.000	1.000	2.060	3.980 (lbs)	1½ - 18	M16 x 2	**CB3000-BT40**
BT50	1.500	0.270	1.770	8.220 (lbs)	⅞ - 20	M24 x 3	**CB1500-BT50**
BT50	2.000	0.060	1.560	8.250 (lbs)	⅞ - 20	M24 x 3	**CB2000-BT50**
BT50	3.000	0.500	2.060	9.410 (lbs)	1½ - 18	M24 x 3	**CB3000-BT50**
BT50	3.380	0.630	2.130	10.500 (lbs)	2¼ - 10	M24 x 3	**CB6000-BT50**

NOTE: Taper ground to AT3 tolerance.

WARNING **Exceeding weight capacity for machine tool spindle and tool changer can cause machine damage and/or serious injury. To prevent:**
- Refer to page B20: 57 to see formula for calculating weight of tool assembly.
- Consult machine tool builder for machine's weight limitations.

Factory technical assistance is also available for specific applications through our Application Engineering department. *ext:* **7611** | *email:* **appeng@alliedmachine.com**

WARNING **Tool failure can cause serious injury. To prevent:**
- Do not exceed recommended 9xD length-to-diameter ratio or exceed 4 total components (including shank)
- Refer to example on page B20: 56 for calculating length to diameter ratio

Factory technical assistance is available for your specific applications through our Application Engineering department. *ext:* **7611** | *email:* **appeng@alliedmachine.com**

Criterion Master Shanks

HSK | Straight Shank

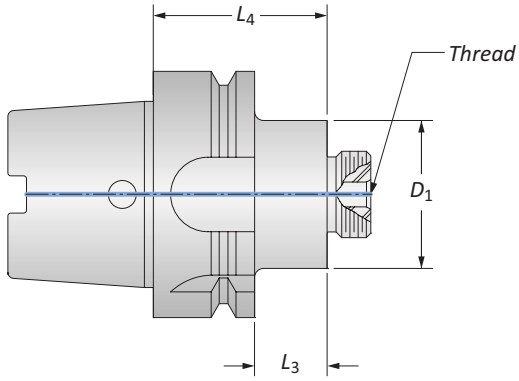

HSK Shanks

Style	D_1	Shank L_3	Shank L_4	Shank Weight	Shank Thread	Part No.
HSK63	1.500	0.730	1.750	1.820 (lbs)	⅞ - 20	**CB1500-HSK63A**
HSK63	2.000	0.730	1.750	2.090 (lbs)	⅞ - 20	**CB2000-HSK63A**
HSK63	3.000	0.500	2.150	3.200 (lbs)	1½ - 18	**CB3000-HSK63A**
HSK100	1.500	0.500	2.270	6.300 (lbs)	⅞ - 20	**CB1500-HSK100A**
HSK100	2.000	0.500	2.270	6.470 (lbs)	⅞ - 20	**CB2000-HSK100A**
HSK100	3.000	0.500	2.270	7.180 (lbs)	1½ - 18	**CB3000-HSK100A**

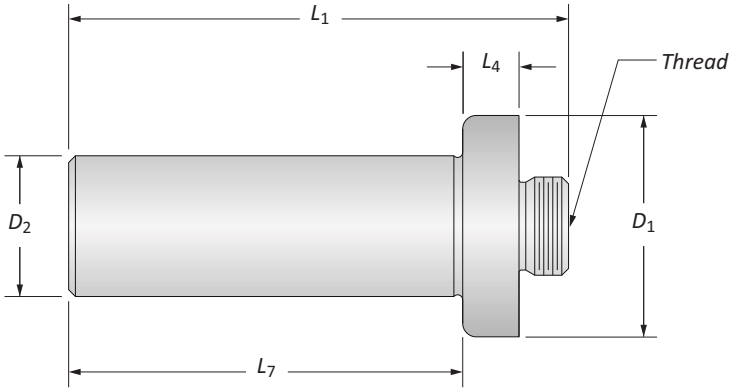

Straight Shanks

D_1	Shank D_2	Shank L_4	Shank L_7	Shank L_1	Shank Weight	Shank Thread	Part No.
1.110	0.500	0.250	2.000	2.690	0.240 (lbs)	⅞ - 20	**SS0500-087520**
1.110	0.625	0.250	2.370	3.060	0.340 (lbs)	⅞ - 20	**SS0625-087520**
1.110	0.750	0.250	2.750	3.440	0.480 (lbs)	⅞ - 20	**SS0750-087520**
1.110	1.000	0.250	3.120	3.810	0.820 (lbs)	⅞ - 20	**SS1000-087520**
1.860	0.750	0.250	3.120	3.870	0.810 (lbs)	1½ - 18	**SS0750-150018**
1.860	1.000	0.250	3.120	3.870	1.110 (lbs)	1½ - 18	**SS1000-150018**
1.860	1.250	0.250	3.880	4.630	1.760 (lbs)	1½ - 18	**SS1250-150018**
1.860	1.500	0.250	4.630	5.380	2.720 (lbs)	1½ - 18	**SS1500-150018**
2.000	2.000	–	6.380	6.880	5.850 (lbs)	1½ - 18	**SS2000-150018**

WARNING **Exceeding weight capacity for machine tool spindle and tool changer can cause machine damage and/or serious injury. To prevent:**
- Refer to page B20: 57 to see formula for calculating weight of tool assembly.
- Consult machine tool builder for machine's weight limitations.

Factory technical assistance is also available for specific applications through our Application Engineering department. *ext:* **7611** | *email:* **appeng@alliedmachine.com**

WARNING **Tool failure can cause serious injury. To prevent:**
- Do not exceed recommended 9xD length-to-diameter ratio or exceed 4 total components (including shank)
- Refer to example on page B20: 56 for calculating length to diameter ratio

Factory technical assistance is available for your specific applications through our Application Engineering department. *ext:* **7611** | *email:* **appeng@alliedmachine.com**

Criterion Shanks

R-8 | Morse Taper

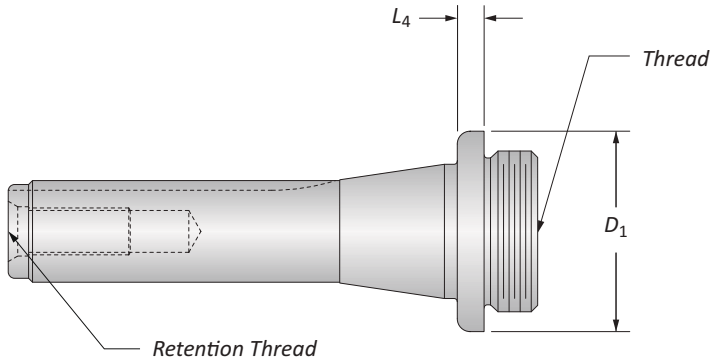

R-8 Shanks

	D_1	Shank L_4	Weight	Thread	Retention Thread	Part No.
i	1.110	0.470	0.990 (lbs)	⅞ - 20	7⁄16 - 20	**R8-087520**
	1.860	0.370	1.270 (lbs)	1-½ - 18	7⁄16 - 20	**R8-150018**

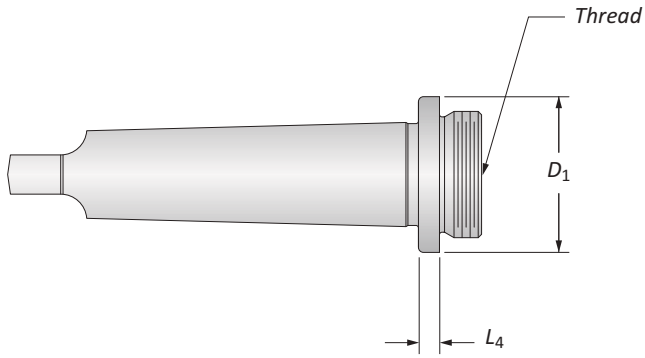

Morse Taper Shanks

	Style	D_1	Shank L_4	Weight	Thread	Part No.
	2 Taper	1.110	0.250	0.380 (lbs)	⅞ - 20	**MT2-375THD87520***
	2 Taper	1.110	0.250	0.390 (lbs)	⅞ - 20	**MT2-087520**
	3 Taper	1.110	0.250	0.710 (lbs)	⅞ - 20	**MT3-087520**
i	3 Taper	1.860	0.250	1.000 (lbs)	1½ - 18	**MT3-150018**
	4 Taper	1.230	0.250	1.350 (lbs)	⅞ - 20	**MT4-087520**
	4 Taper	1.860	0.250	1.700 (lbs)	1½ - 18	**MT4-150018**
	5 Taper	1.860	0.250	3.770 (lbs)	1½ - 18	**MT5-150018**

*Item features a ⅜ - 16 thread instead of tang.

B20: 58 - 59
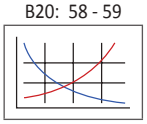

B20: 54 - 55

B20: 44 - 45
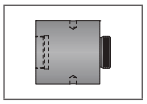

B20: 14
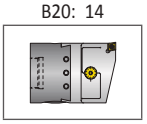

B20: 24 - 43
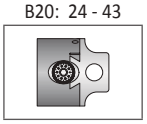

i = Imperial (in)
m = Metric (mm)

WARNING **Exceeding weight capacity for machine tool spindle and tool changer can cause machine damage and/or serious injury. To prevent:**
- Refer to page B20: 57 to see formula for calculating weight of tool assembly.
- Consult machine tool builder for machine's weight limitations.

Factory technical assistance is also available for specific applications through our Application Engineering department. *ext:* **7611** | *email:* **appeng@alliedmachine.com**

WARNING **Tool failure can cause serious injury. To prevent:**
- Do not exceed recommended 9xD length-to-diameter ratio or exceed 4 total components (including shank)
- Refer to example on page B20: 56 for calculating length to diameter ratio

Factory technical assistance is available for your specific applications through our Application Engineering department. *ext:* **7611** | *email:* **appeng@alliedmachine.com**

Criterion Master Shanks

NMTB Taper | DIN69871A

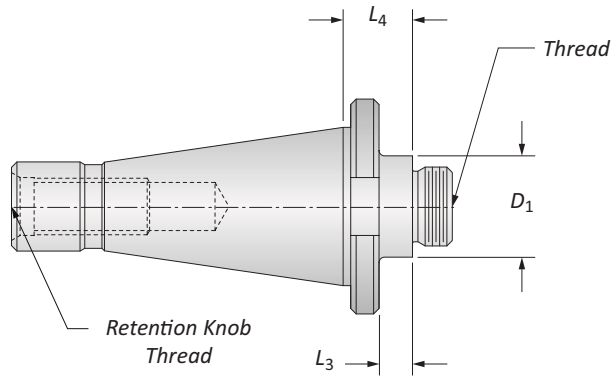

NMTB Taper Shanks

	Style	D_1	Shank L_3	L_4	Weight	Thread	Retention Thread	Part No.
	NMTB 30	1.120	0.370	0.790	0.810 (lbs)	⅞ - 20	½ - 13	**NMTB30-087520**
	NMTB 30	1.850	0.630	1.050	1.190 (lbs)	1½ - 18	½ - 13	**NMTB30-150018**
	NMTB 40	1.120	0.370	0.770	1.780 (lbs)	⅞ - 20	⅝ - 11	**NMTB40-087520**
ⓘ	NMTB 40	1.850	0.630	1.020	2.310 (lbs)	1½ - 18	⅝ - 11	**NMTB40-150018**
	NMTB 50	1.970	0.510	1.250	6.750 (lbs)	⅞ - 20	1 - 8	**NMTB50-087520**
	NMTB 50	1.870	0.400	1.210	6.870 (lbs)	1½ - 18	1 - 8	**NMTB50-150018**
	NMTB 50	3.380	0.500	1.250	8.320 (lbs)	2¼ - 10	1 - 8	**NMTB50-225010**

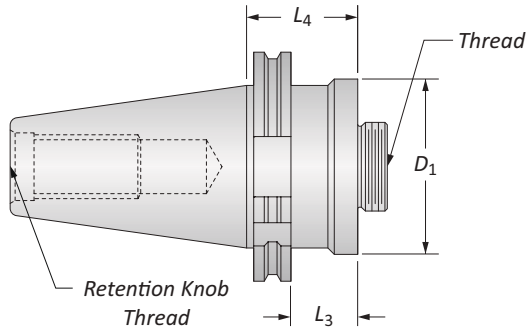

DIN 69871A

	D_1	Shank L_3	L_4	Weight	Thread	Retention Thread	Part No.
	38.00	19.00	38.40	1.18 (kg)	⅞ - 20	M16 x 2.0	**CB038M-DIN40**
	50.00	22.00	41.50	1.18 (kg)	⅞ - 20	M16 x 2.0	**CB050M-DIN40**
	76.00	45.00	48.00	1.68 (kg)	1½ - 18	M16 x 2.0	**CB076M-DIN40**
ⓜ	38.00	19.00	38.40	3.36 (kg)	⅞ - 20	M24 x 3.0	**CB038M-DIN50**
	50.00	22.00	41.50	3.45 (kg)	⅞ - 20	M24 x 3.0	**CB050M-DIN50**
	76.00	22.00	48.00	3.66 (kg)	1½ - 18	M24 x 3.0	**CB076M-DIN50**

NOTE: Taper ground to AT3 tolerance.

B20: 58 - 59 | B20: 54 - 55 | B20: 44 - 45 | B20: 14 | B20: 24 - 43

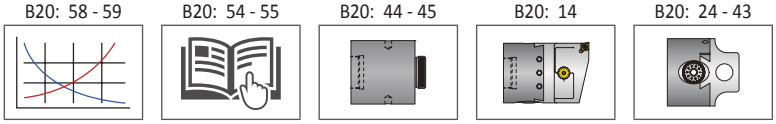

Key on B20: 1

ⓘ = Imperial (in)
ⓜ = Metric (mm)

⚠ WARNING **Exceeding weight capacity for machine tool spindle and tool changer can cause machine damage and/or serious injury. To prevent:**
- Refer to page B20: 57 to see formula for calculating weight of tool assembly.
- Consult machine tool builder for machine's weight limitations.

Factory technical assistance is also available for specific applications through our Application Engineering department. *ext:* **7611** | *email:* **appeng@alliedmachine.com**

⚠ WARNING **Tool failure can cause serious injury. To prevent:**
- Do not exceed recommended 9xD length-to-diameter ratio or exceed 4 total components (including shank)
- Refer to example on page B20: 56 for calculating length to diameter ratio

Factory technical assistance is available for your specific applications through our Application Engineering department. *ext:* **7611** | *email:* **appeng@alliedmachine.com**

Criterion Shanks

DIN 2080

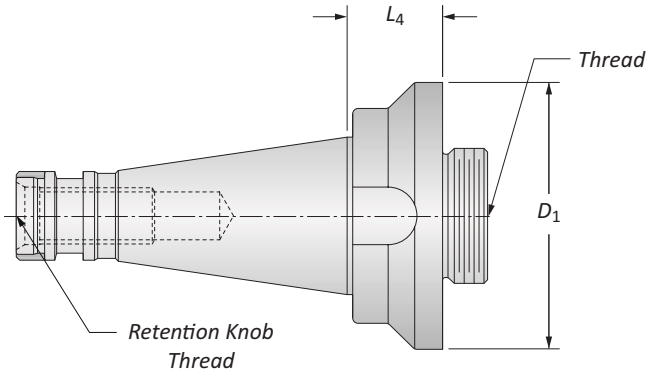

DIN 2080

	Shank						
	D_1	L_3	L_4	Weight	Thread	Retention Thread	Part No.
	50.00	17.00	25.70	0.45 (kg)	⅞ - 20	M12	**CB050M-ISO30**
	50.00	11.00	27.70	0.91 (kg)	⅞ - 20	M16	**CB050M-ISO40**
ⓜ	76.00	22.00	27.70	1.32 (kg)	1½ - 18	M16	**CB076M-ISO40**
	50.00	11.00	39.40	2.88 (kg)	⅞ - 20	M24	**CB038M-ISO50**
	76.00	36.00	39.40	3.36 (kg)	1½ - 18	M24	**CB076M-ISO50**

B20: 58 - 59
Key on B20: 1
B20: 54 - 55
B20: 44 - 45
B20: 14
B20: 24 - 43

ⓘ = Imperial (in)
ⓜ = Metric (mm)

⚠ WARNING **Exceeding weight capacity for machine tool spindle and tool changer can cause machine damage and/or serious injury. To prevent:**
- Refer to page B20: 57 to see formula for calculating weight of tool assembly.
- Consult machine tool builder for machine's weight limitations.

Factory technical assistance is also available for specific applications through our Application Engineering department. *ext:* **7611** | *email:* **appeng@alliedmachine.com**

⚠ WARNING **Tool failure can cause serious injury. To prevent:**
- Do not exceed recommended 9xD length-to-diameter ratio or exceed 4 total components (including shank)
- Refer to example on page B20: 56 for calculating length to diameter ratio

Factory technical assistance is available for your specific applications through our Application Engineering department. *ext:* **7611** | *email:* **appeng@alliedmachine.com**

Criterion Accessories

Insert Screws | Drivers | Pin Spanner Wrenches

Insert Screws & Drivers

Insert Form	Insert Screws Part No.	Thread	Insert Driver Part No.	Technical Information Torque Specs	Technical Information Key Size
WBGX0301..	**215377**	M2x4	**115537**	0.6 (Nm)	T6
CC..215.. CC..0602..	**115676**	M2.5x5	**115590**	1.2 (Nm)	T8
CC..32500 CC..09T3 (<Ø37mm)	**115672**	M3.5x7.5	**115664**	3.0 (Nm)	T15
CC..32500 CC..09T3 (<Ø36mm)	**115673**	M3.5x9	**115664**	3.0 (Nm)	T15
CC..43.. CC..1204..	**215149**	M4.5x11.5	**215150**	5.0 (Nm)	T20
TC..215.. TC..1102..	**115676**	M2.5x5	**115590**	1.2 (Nm)	T8
TC..325.. TC..16T3	**115673**	M3.5x9	**115664**	3.0 (Nm)	T15

Pin Spanner Wrenches

Body Diameter	Pin Spanner Wrench Part No.
1.000" (25.00mm)	**CB1000-PSW**
1.250" (32.00mm)	**CB1250-PSW**
1.500" (38.00mm)	**CB1500-PSW**
2.000" (38.00mm)	**CB2000-PSW**
2.500" (63.50mm)	**CB2500-PSW**
3.000" (76.00mm)	**CB3000-PSW**
4.000" (101.00mm)	**CB4000-PSW**

B20: 58 - 59
Key on B20: 1
B20: 54 - 55

Criterion Hardware Kits

Corresponding Boring Head Item Number	Hardware Kit Part No.
CBR-0625CP, CBR-0628TP, CBR-0625SG, CBS-0625CP, CBS-0625TP, CBS-0625SG, CBER16S-SG, CBER16-SG, CBER20S-SG, CBER20-SG, CBER16MS-CP, CBER16M-CP, CBER16MS-TP, CBER16M-TP, CBER20MS-CP, CBER20M-CP, CBER20MS-TP, CBER20M-TP, CBER16S-CP, CBER16-CP, CBER16S-TP, CBER16-TP, CBER20S-CP, CBER20-CP, CBER20S-TP, CBER20-TP	**CB0625-HDW**
CBS-0750CP, CBS-0750TP, CBS-0750SH, CBR-0750CP, CBR-0750TP, CBR-0750SH, CBER25S-SH, CBER25-SH, CBER25S-CP, CBER25-CP, CBER25S-TP, CBER25-TP, CBER25-TP, CBER25MS-CP, CBER25M-CP, CBER25MS-TP	**CB0750-HDW**
TMT-0750H, TMT-1000H	**TMT0750-HDW**
CB1000CC, CB1000TC CBS-1000CP, CBS-1000TP, CBS-1000CPMA, CBS-1000TPMA, CBS-1000SA, CBR-1000CP, CBR-1000TP, CBR-1000CPMA, CBR-1000TPMA, CBR-1000SA, CBER32S-CPMA, CBER32-CPMA, CBER32S-TPMA, CBER32-TPMA, CBER32MS-CPMA, CBER32M-CPMA, CBER32MS-TPMA, CBER32M-TPMA, CBER32S-SA, CBER32-SA, CBER32S-CP, CBER32-CP, CBER32S-TP, CBER32-TP, CBER32MS-CP, CBER32M-CP, CBER32MS-TP, CBER32M-TP, CB1000-TPMA, CB1000-CPMA, CB1000-TP, CB1000-CP	**CB1000-HDW**
CT1000-0, CT1000-1, CT1000-2	**CT1000-HDW**
CB025MCC, CB025MTC, CB025M-TPMA, CB025M-CPMA, CB025M-TP, CB025M-CP	**CB025M-HDW**
CT025M-0, CT025M-1, CT025M-2	**CT025M-HDW**
CBS1250B, CB1250CC, CB1250TC, CBS-1250CP, CBS-1250TP, CBS-1250CPMA, CBS-1250TPMA, CBS-1250SB, CBR-1250CP, CBR-1250TP, CBR-1250CPMA, CBR-1250TPMA, CBR-1250SB, CBER40S-CPMA, CBER40-CPMA, CBER40S-TPMA, CBER40-TPMA, CBER40S-CPMA, CBER40M-CPMA, CBER40MS-TPMA, CBER40M-TPMA, CBER40S-SB, CBER40-SB, CBER40S-CP, CBER40-CP, CBER40S-TP, CBER40-TP, CBER40MS-CP, CBER40M-CP, CBER40MS-TP, CBER40M-TP, CB1250-TPMA, CB1250-CPMA, CB1250-TP, CB1250-CP	**CB1250-HDW**
CT1250-0, CT1250-1, CT1250-2	**CT1250-HDW**
CB032MCC, CB032MTC, CB032M-TPMA, CB032M-CPMA, CB032M-TP, CBO32M-CP	**CB032M-HDW**
CT032M-0, CT032M-1, CT032M-2	**CT032M-HDW**
MBS0500B, CB1500CC, CB1500TC, MB002-500, MB002-625, MB002-750, MB152-500, MB152-625, MB152-750, CB-2375A, CB-1500B, CB-1500AMA, CB1500-TPMA, CB1500-CPMA, CB1500-TP, CB1500-CP	**CB1500-HDW**
CT1500-0, CT1500-1, CT1500-2	**CT1500-HDW**
SQ-1500B	**S1500-HDW**
CB038MCC, CB038MTC, CB-038MA, CB-038MB, CB038M-TPMA, CB038M-CPMA, CB038M-TP, CB038M-CP	**CB038-HDW**
CT038M-0, CT038M-1, CT038-2	**CT038M-HDW**
SQ-2000B	**S2000-HDW**
CB2000CC, CB2000TC, CB202B, CB2500BMA CSL-202, CB-202A, CB-202B, CB-2500BMA, CB2000-TPMA, CB2000-CPMA, CB050M-TP, CB050M-CP	**CB2000-HDW**
CT2000-0, CT2000-1, CT2000-2	**CT2000-HDW**
CB050MCC, CB050MTC, CB-050MA, CB-050MB, CB-064MBMA, CB050M-TPMA, CB050M-TPMA, CB050M-TPMA, CB050M-CPMA, CB050M-TP, CP050M-CP	**CB050M-HDW**
CT050M-0, CT050M-1, CT050M-2	**CT050M-HDW**
SQ-3000D, SQ-3000E	**S3000-HDW**
CB3000CC, CB3000TC, CB203D, CSL-203, CB-203D, CB-3000DMA, CB3000-TPMA, CB3000-CPMA, CB3000-TP, CB3000-CP	**CB3000-HDW**
CT3000-0, CT3000-1, CT3000-2	**CT3000-HDW**
CB076MCC, CB076MTC, CB-076MD, CB-076MDMA, CB076M-TPMA, CB076M-CPMA, CBO76M-TP, CB076M-CP	**CB076M-HDW**
CT076M-0, CT076M-1, CT076M-2	**CT076M-HDW**
CB204E, CSL-204, CB-204E, CB4000-TP, CB4000-TP, CB4000-TP, CB4000-CP	**CB4000-HDW**
CB-101ME, CB101M-TP, CB101-CP	**CB101M-HDW**
CB206F, CB-206F	**CB6000-HDW**

B20: 58 - 59
Key on B20: 1
B20: 54 - 55

Technical Information

Assembly Item Number	Lock Screw	Torque Specs Locking Screw Allen Key Size	Dial Adjust Allen Key Size	Micro-adjusting Dial Allen Key Size	Clamping Screw Allen Key Size	Insert Torx® Screw Driver Size
MBS0500B	1.4 (Nm)	5/64	5/32	-	1/8	-
CBS1250B	0.7 (Nm)	1/16	5/32	-	1/8	-
MDS0625	1.4 (Nm)	9/64	7/64	-	-	T8
MDS0750	1.5 (Nm)	5/32	7/64	-	-	T15
MDS16M	1.4 (Nm)	2.5 mm	2.5 mm	-	-	T8
MDS20M	1.5 (Nm)	3.0 mm	2.5 mm	-	-	T15
CB1000CC	0.6 (Nm)	0.050	5/32	3/32	-	T8
CB1000TC	0.6 (Nm)	0.050	5/32	3/32	-	T8
CB1250CC	0.7 (Nm)	1/16	5/32	3/32	-	T8
CB1250TC	0.7 (Nm)	1/16	5/32	3/32	-	T8
CB1500CC	1.4 (Nm)	5/64	5/32	7/64	-	T15
CB1500TC	1.4 (Nm)	5/64	5/32	7/64	-	T15
CB2000CC	2.3 (Nm)	3/32	5/32	7/64	-	T15
CB2000TC	2.3 (Nm)	3/32	5/32	7/64	-	T15
CB3000CC	5.3 (Nm)	1/8	1/4	7/64	-	T15
CB3000TC	5.3 (Nm)	1/8	1/4	7/64	-	T15
CB025MCC	0.6 (Nm)	1.5 mm	4.0 mm	2.5 mm	-	T8
CB025MTC	0.6 (Nm)	1.5 mm	4.0 mm	2.5 mm	-	T8
CB032MCC	0.7 (Nm)	2.0 mm	4.0 mm	2.5 mm	-	T8
CB032MTC	0.7 (Nm)	2.0 mm	4.0 mm	2.5 mm	-	T8
CB038MCC	1.4 (Nm)	2.0 mm	4.0 mm	3.0 mm	-	T15
CB038MTC	1.4 (Nm)	2.0 mm	4.0 mm	3.0 mm	-	T15
CB050MCC	2.3 (Nm)	2.5 mm	4.0 mm	3.0 mm	-	T15
CB050MTC	2.3 (Nm)	2.5 mm	4.0 mm	3.0 mm	-	T15
CB076MCC	5.3 (Nm)	3.0 mm	6.0 mm	3.0 mm	-	T15
CB076MTC	5.3 (Nm)	3.0 mm	6.0 mm	3.0 mm	-	T15
CB2500BMA	2.3 (Nm)	3/32	1/4	7/64	7/32	-
CB202B	2.3 (Nm)	3/32	5/32	-	5/32	-
CB203D	5.3 (Nm)	1/8	1/4	-	7/32	-
CB204E	12.4 (Nm)	5/32	1/4	-	7/32	-
CB206F	12.4 (Nm)	5/32	5/16	-	1/4	-

B20: 58 - 59
Key on B20: 1
B20: 54 - 55

Setup Instructions | Standard Adjusting Boring Heads

Adjusting Standard Adjusting Boring Heads (see figure B1)

1. Loosen locking screw (6).
2. Turn dial screw (3) to desired graduation.
3. Tighten locking screw (6) to proper torque spec (laser marked on tool).

IMPORTANT: Do not loosen the gib screws (5). It can cause poor performance.

NOTE: To machine smaller bore diameters, turn dial screw (3) counterclockwise one full rotation to remove any backlash. Once backlash is mitigated, turn dial screw (3) clockwise to desired graduation.

No.	Part
1	Bar holder
2	Boring head body
3	Dial screw
4	Bar holder set screws
5	Gib screws (DO NOT ADJUST)
6	Locking screw

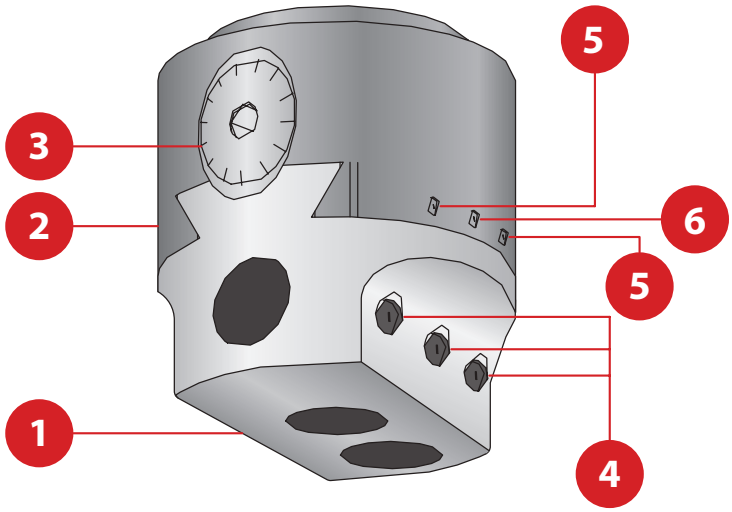

Figure B1

B20: 58 - 59
Key on B20: 1
B20: 54 - 55

Setup Instructions | Micro-adjusting Boring Heads

Setting Up Micro-adjusting Boring Heads (see figure B2)

Set the microadjusting dial screw range

1. The microadjusting dial screws (4) only have a total range of 0.006" (0.152 mm) on diameter. To zero, turn dial (4) clockwise until dial screw bottoms out. Turn the dial (4) two complete turns counterclockwise. Turn dial (4) one half turn clockwise. Dial is now centered for 0.003" (0.076 mm) positive or negative travel.

Setting the diameter of the boring head

2. Loosen locking screw (6).
3. Turn dial screw (3) to adjust to the desired diameter using a presetter or plunge indicator or the dial screw (3).
4. Tighten the locking screw (6) to the proper torque spec (laser marked on the tool).
   - Microadjustments will be made at the machine.
5. Make a shallow test cut (roughly 0.250" deep) to determine the actual diameter.
6. Use the microadjusting dial (4) to adjust to the finish diameter. Do not release the locking screw (6) for microadjustments.
   - If the hole diameter is more than 0.002" from the target hole size return to step two.

IMPORTANT: Do not loosen the gib screws (5). It can cause poor performance.

NOTE: Backlash occurs when the diameter of the boring head needs to be decreased. To remove backlash, turn the dial (3) counterclockwise at least one half of a full rotation past the desired adjustment. Once backlash is mitigated, turn dial screw (3) clockwise to the desired adjustment.

No.	Part
1	Insert holder
2	Boring head body
3	Dial screw
4	Microadjusting dial screw
5	Gib screws (DO NOT ADJUST)
6	Locking screw

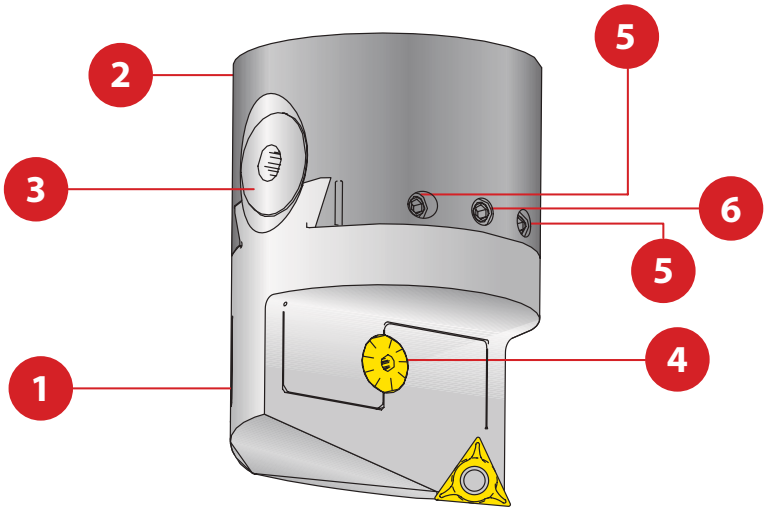

Figure B2

B20: 58 - 59
Key on B20: 1
B20: 54 - 55

Guidelines for Not Exceeding Recommended Length-to-Diameter Ratio

To calculate, see graphics below:

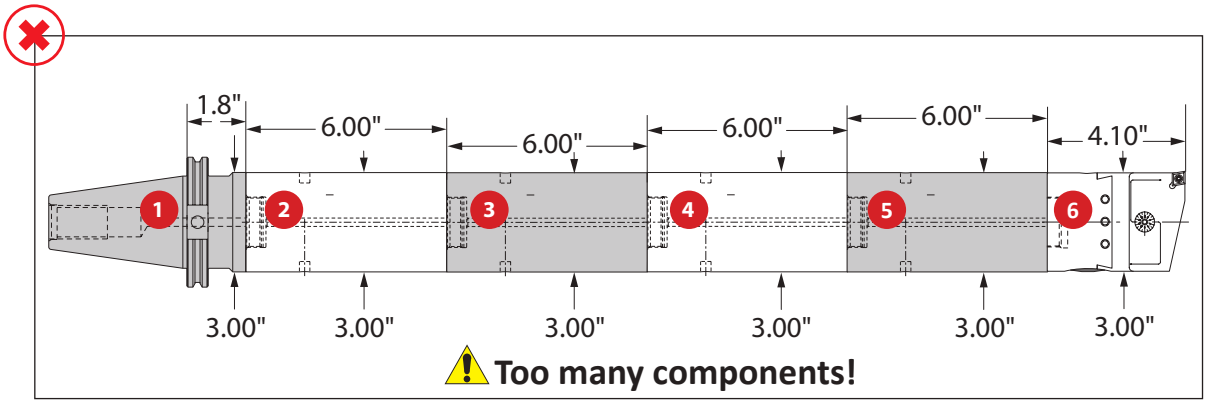

*Length-to-diameter ratio is calculated using body diameters, not cutting diameter.

Step 1: Find L : D by component

1. 0.6 = 1.88/3.00
2. 2.0 = 6.00/3.00
3. 2.0 = 6.00/3.00
4. 2.0 = 6.00/3.00
5. 2.0 = 6.00/3.00
6. 1.4 = 4.10/3.00

Step 2: Add each L : D Average

0.6
2.0
2.0
2.0
2.0
+ 1.4

10.0 = L : D ratio

Too Long!

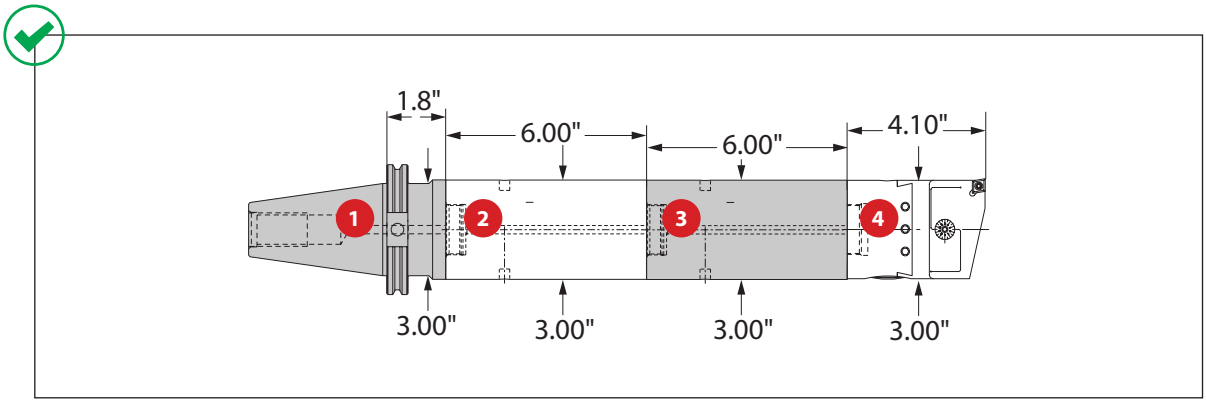

*Length-to-diameter ratio is calculated using body diameters, not cutting diameter.

Step 1: Find L : D by component

1. 0.6 = 1.88/3.00
2. 2.0 = 6.00/3.00
3. 2.0 = 6.00/3.00
4. 1.4 = 4.10/3.00

Step 2: Add each L : D Average

0.6
2.0
2.0
+ 1.4

6.0 = L : D ratio

WARNING **Tool failure can cause serious injury. To prevent:**
- Do not exceed recommended 9xD length-to-diameter ratio or exceed 4 total components (including shank).

Factory technical assistance is available for your specific applications through our Application Engineering department. *ext:* **7611** | *email:* **appeng@alliedmachine.com**

Calculating Tool Assembly Weight

To calculate, see graphics below:

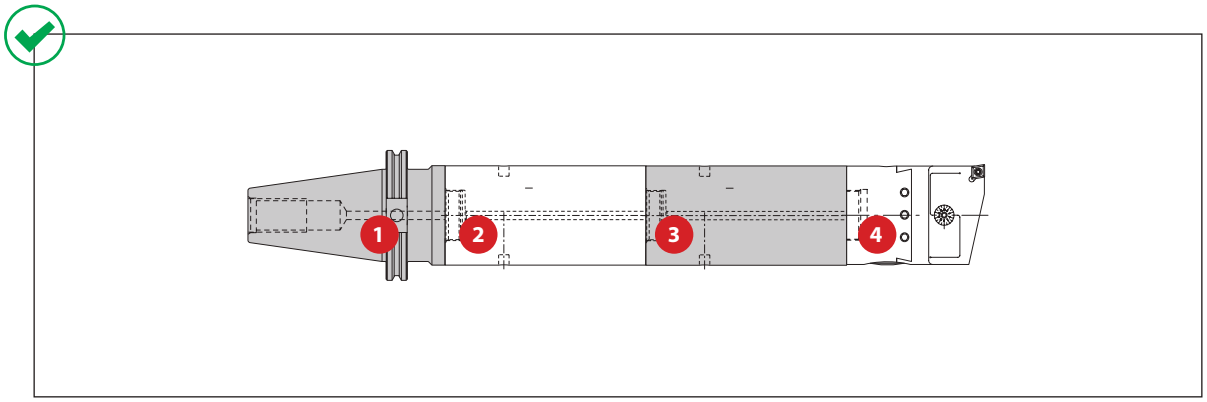

Step 1: Find weight for each component

Example:

	Boring Range D_1	Thread Connection	4 Boring Head L_1	D_2	Weight	Insert Form	Order Number
i	1.050 - 1.320	⅞ - 20	2.690	1.000	0.50 (lbs)	CC..215...	**CB1000CC**
	1.050 - 1.320	⅞ - 20	2.690	1.000	0.50 (lbs)	TC..215...	**CB1000TC**
	1.300 - 1.600	⅞ - 20	2.900	1.250	0.80 (lbs)	CC..215...	**CB1250CC**
	1.300 - 1.600	⅞ - 20	2.900	1.250	0.80 (lbs)	TC..215...	**CB1250TC**
	1.585 - 2.700	⅞ - 20	3.200	1.500	1.30 (lbs)	CC..325...	**CB1500CC**
	1.585 - 2.700	⅞ - 20	3.200	1.500	1.30 (lbs)	TC..325...	**CB1500TC**
	2.060 - 3.320	⅞ - 20	3.590	2.000	2.40 (lbs)	CC..325...	**CB2000CC**
	2.060 - 3.320	⅞ - 20	3.590	2.000	2.40 (lbs)	TC..325...	**CB2000TC**
	3.065 - 5.065	1½ - 18	4.100	3.000	5.80 (lbs)	CC..325...	**CB3000CC**
	3.065 - 5.065	1½ - 18	4.100	3.000	5.80 (lbs)	TC..325...	**CB3000TC**
m	27.00 - 33.00	⅞ - 20	68.35	25	0.23 (kg)	CC..0602...	**CB025MCC**
	27.00 - 33.00	⅞ - 20	68.35	25	0.23 (kg)	TC..1102...	**CB025MTC**
	33.00 - 41.00	⅞ - 20	73.65	32	0.36 (kg)	CC..0602...	**CB032MCC**
	33.00 - 41.00	⅞ - 20	73.65	32	0.36 (kg)	TC..1102...	**CB032MTC**
	41.00 - 68.00	⅞ - 20	81.25	38	0.59 (kg)	CC..09T3...	**CB038MCC**
	41.00 - 68.00	⅞ - 20	81.25	38	0.59 (kg)	TC..16T3...	**CB038MTC**
	53.00 - 84.00	⅞ - 20	91.30	50	1.09 (kg)	CC..09T3...	**CB050MCC**
	53.00 - 84.00	⅞ - 20	91.30	50	1.09 (kg)	TC..16T3...	**CB050MTC**
	78.00 - 128.00	1½ - 18	104.25	76	2.36 (kg)	CC..09T3...	**CB076MCC**
	78.00 - 128.00	1½ - 18	104.25	76	2.36 (kg)	TC..16T3...	**CB076MTC**

Imperial (in) = 0.00005" adjustment on diameter.
Metric (mm) = 0.001 mm adjustment on diameter.

Step 2: Calculate total assembly weight

1 8.03 lbs
2 11.50 lbs
3 11.50 lbs
+ 4 5.80 lbs
36.83 lbs

Step 3: Consult machine tool builder to ensure tool assembly weight does not exceed machine capabilities.

⚠ WARNING **Exceeding weight capacity for machine tool spindle and tool changer can cause machine damage and/or serious injury. To prevent:**
- Consult machine tool builder for machine's weight limitations.

Factory technical assistance is also available for specific applications through our Application Engineering department. *ext:* **7611** | *email:* **appeng@alliedmachine.com**

Recommended Cutting Data | Imperial (inch)

ISO	Material	(BHN) Hardness	Grade	*Speed SFM	Recommended Feed (inch / tooth) Nose Radius 0.004"	0.008"	0.016"	0.031"
P	**Free-Machining Steel** 1118, 1215, 12L14, etc.	100 - 250	Carbide	525 - 975	0.001 - 0.003	0.002 - 0.005	0.004 - 0.006	0.006 - 0.009
	Low-Carbon Steel 1010, 1020, 1025, 1522, 1144, etc.	85 - 275	Carbide	475 - 925	0.001 - 0.002	0.002 - 0.004	0.003 - 0.005	0.005 - 0.008
	Medium-Carbon Steel 1030, 1040, 1050, 1527, 1140, 1151, etc.	125 - 325	Carbide	475 - 825	0.001 - 0.002	0.002 - 0.004	0.003 - 0.005	0.005 - 0.008
	Alloy Steel 4140, 5140, 8640, etc.	125 - 375	Carbide	400 - 700	0.001 - 0.002	0.002 - 0.004	0.003 - 0.005	0.005 - 0.008
	High-Strength Alloy 4340, 4330V, 300M, etc.	225 - 400	Carbide	325 - 600	0.001 - 0.002	0.002 - 0.004	0.003 - 0.005	0.005 - 0.008
	Structural Steel A36, A285, A516, etc.	100 - 350	Carbide	475 - 925	0001 - 0.002	0.002 - 0.004	0.003 - 0.005	0.005 - 0.008
	Tool Steel H-13, H-21, A-4, 0-2, S-3, etc.	150 - 250	Carbide	325 - 600	0.001 - 0.002	0.002 - 0.003	0.003 - 0.004	0.004 - 0.006
S	**High-Temp Alloy** Hastelloy B, Inconel 600, etc.	140 - 310	Carbide	100 - 225	0.001 - 0.002	0.002 - 0.003	0.003 - 0.005	0.004 - 0.006
	Titanium Alloy	140 - 310	Carbide	125 - 300	0.001 - 0.002	0.002 - 0.003	0.003 - 0.005	0.004 - 0.006
	Aerospace Alloy S82	185 - 350	Carbide	125 - 300	0.001 - 0.002	0.002 - 0.003	0.003 - 0.005	0.004 - 0.006
M	**Stainless Steel 400 Series** 416, 420, etc.	185 - 350	Carbide	300 - 525	0.001 - 0.002	0.002 - 0.004	0.003 - 0.004	0.004 - 0.006
	Stainless Steel 300 Series 304, 316, 17-4PH, etc.	135 - 275	Carbide	300 - 525	0.001 - 0.002	0.002 - 0.004	0.003 - 0.004	0.004 - 0.006
	Super Duplex Stainless Steel	135 - 275	Carbide	300 - 525	0.001 - 0.002	0.002 - 0.004	0.003 - 0.004	0.004 - 0.006
H	**Wear Plate**	400 - 600	Carbide	100 - 200	0.001 - 0.002	0.002 - 0.003	0.003 - 0.004	0.004 - 0.006
	Hardened Steel	300 - 500	Carbide	125 - 275	0.001 - 0.002	0.002 - 0.003	0.003 - 0.004	0.004 - 0.006
K	**SG / Nodular Cast Iron**	120 - 320	Carbide	475 - 850	0.001 - 0.002	0.002 - 0.004	0.003 - 0.005	0.005 - 0.008
	Grey / White Iron	180 - 320	Carbide	600 - 1000	0.001 - 0.002	0.002 - 0.004	0.003 - 0.005	0.005 - 0.008
N	**Cast Aluminum**	30 - 180	Carbide	850 - 1000	0.001 - 0.002	0.002 - 0.004	0.003 - 0.005	0.005 - 0.008
	Wrought Aluminum	30 - 180	Carbide	675 - 1000	0.001 - 0.003	0.002 - 0.005	0.004 - 0.006	0.006 - 0.009
	Aluminum Bronze	100 - 250	Carbide	475 - 925	0.001 - 0.002	0.002 - 0.004	0.004 - 0.005	0.005 - 0.008
	Brass	100	Carbide	675 - 1000	0.001 - 0.002	0.002 - 0.004	0.003 - 0.005	0.005 - 0.008
	Copper	60	Carbide	325 - 600	0.001 - 0.002	0.002 - 0.003	0.003 - 0.004	0.004 - 0.005

*Not to exceed max recommended RPM for boring head.

Deep Hole Boring Speed Adjustment

⚠ For Dynamic Boring Tool Length			
Boring Type	**7xD**	**8xD**	**9xD**
Finishing	0.70	0.50	0.30

Recommended Speed Example

If the recommended speed for a finish boring assembly under 5xD is 400 SFM, then the speed for an 8xD finish boring assembly in the same application would be 200 SFM. (400 SFM x 0.50 = 200 SFM)

5xD = 400 SFM	8xD = 200 SFM

IMPORTANT: Max spindle speed refers to maximum possible speed for individual boring head and is not a recommended parameter. Refer to page B20: 58 for recommended application specific parameters. Factory technical assistance is available for your specific applications through our Application Engineering department.
ext: **7611** | *email:* **appeng@alliedmachine.com**

⚠ WARNING **Tool failure can cause serious injury. To prevent:**
- Do not exceed recommended 9xD length-to-diameter ratio or exceed 4 total components (including shank)
- Refer to example on page B20: 56 for calculating length to diameter ratio

Factory technical assistance is available for your specific applications through our Application Engineering department. *ext:* **7611** | *email:* **appeng@alliedmachine.com**

Recommended Cutting Data | Metric (mm)

ISO	Material	(BHN) Hardness	Grade	*Speed m/min	Recommended Feed (mm / tooth) Nose Radius 0.1 mm	0.2 mm	0.4 mm	0.8 mm
P	**Free-Machining Steel** 1118, 1215, 12L14, etc.	100 - 250	Carbide	160 - 300	0.02 - 0.07	0.05 - 0.13	0.10 - 0.15	0.15 - 0.23
	Low-Carbon Steel 1010, 1020, 1025, 1522, 1144, etc.	85 - 275	Carbide	145 - 280	0.02 - 0.05	0.05 - 0.10	0.07 - 0.13	0.13 - 0.20
	Medium-Carbon Steel 1030, 1040, 1050, 1527, 1140, 1151, etc.	125 - 325	Carbide	145 - 250	0.02 - 0.05	0.05 - 0.10	0.07 - 0.13	0.13 - 0.20
	Alloy Steel 4140, 5140, 8640, etc.	125 - 375	Carbide	120 - 210	0.02 - 0.05	0.05 - 0.10	0.07 - 0.13	0.13 - 0.20
	High-Strength Alloy 4340, 4330V, 300M, etc.	225 - 400	Carbide	100 - 180	0.02 - 0.05	0.05 - 0.10	0.07 - 0.13	0.13 - 0.20
	Structural Steel A36, A285, A516, etc.	100 - 350	Carbide	145 - 280	0.02 - 0.05	0.05 - 0.10	0.07 - 0.13	0.13 - 0.20
	Tool Steel H-13, H-21, A-4, 0-2, S-3, etc.	150 - 250	Carbide	100 - 180	0.02 - 0.05	0.05 - 0.07	0.07 - 0.10	0.10 - 0.15
S	**High-Temp Alloy** Hastelloy B, Inconel 600, etc.	140 - 310	Carbide	30 - 70	0.02 - 0.05	0.05 - 0.07	0.07 - 0.13	0.10 - 0.15
	Titanium Alloy	140 - 310	Carbide	40 - 90	0.02 - 0.05	0.05 - 0.07	0.07 - 0.13	0.10 - 0.15
	Aerospace Alloy S82	185 - 350	Carbide	40 - 90	0.02 - 0.05	0.05 - 0.07	0.07 - 0.13	0.10 - 0.15
M	**Stainless Steel 400 Series** 416, 420, etc.	185 - 350	Carbide	90 - 160	0.02 - 0.05	0.05 - 0.10	0.07 - 0.10	0.10 - 0.15
	Stainless Steel 300 Series 304, 316, 17-4PH, etc.	135 - 275	Carbide	90 - 160	0.02 - 0.05	0.05 - 0.10	0.07 - 0.10	0.10 - 0.15
	Super Duplex Stainless Steel	135 - 275	Carbide	90 - 160	0.02 - 0.05	0.05 - 0.10	0.07 - 0.10	0.10 - 0.15
H	**Wear Plate**	400 - 600	Carbide	30 - 60	0.02 - 0.05	0.05 - 0.07	0.07 - 0.10	0.10 - 0.15
	Hardened Steel	300 - 500	Carbide	40 - 80	0.02 - 0.05	0.05 - 0.07	0.07 - 0.10	0.10 - 0.15
K	**SG / Nodular Cast Iron**	120 - 320	Carbide	145 - 260	0.02 - 0.05	0.05 - 0.10	0.07 - 0.13	0.13 - 0.20
	Grey / White Iron	180 - 320	Carbide	180 - 306	0.02 - 0.05	0.05 - 0.10	0.07 - 0.13	0.13 - 0.20
N	**Cast Aluminum**	30 - 180	Carbide	260 - 306	0.02 - 0.05	0.05 - 0.10	0.07 - 0.13	0.13 - 0.20
	Wrought Aluminum	30 - 180	Carbide	205 - 305	0.02 - 0.07	0.05 - 0.13	0.10 - 0.15	0.15 - 0.23
	Aluminum Bronze	100 - 250	Carbide	145 - 280	0.02 - 0.05	0.05 - 0.10	0.10 - 0.13	0.13 - 0.20
	Brass	100	Carbide	205 - 305	0.02 - 0.05	0.05 - 0.10	0.07 - 0.13	0.13 - 0.20
	Copper	60	Carbide	100 - 180	0.02 - 0.05	0.05 - 0.07	0.07 - 0.10	0.10 - 0.13

*Not to exceed max recommended RPM for boring head.

Deep Hole Boring Speed Adjustment

⚠ For Dynamic Boring Tool Length			
Boring Type	**7xD**	**8xD**	**9xD**
Finishing	0.70	0.50	0.30

Recommended Speed Example

If the recommended speed for a finish boring assembly under 5xD is 260 m/min, then the speed for an 8xD finish boring assembly in the same application would be 260 m/min. (260 m/min x 0.50 = 130 m/min)

5xD = 260 m/min	8xD = 130 m/min

IMPORTANT: Max spindle speed refers to maximum possible speed for individual boring head and is not a recommended parameter. Refer to page B20: 58 for recommended application specific parameters. Factory technical assistance is available for your specific applications through our Application Engineering department.
ext: **7611** | *email:* **appeng@alliedmachine.com**

⚠ **WARNING** **Tool failure can cause serious injury. To prevent:**
- Do not exceed recommended 9xD length-to-diameter ratio or exceed 4 total components (including shank)
- Refer to example on page B20: 56 for calculating length to diameter ratio

Factory technical assistance is available for your specific applications through our Application Engineering department. *ext:* **7611** | *email:* **appeng@alliedmachine.com**

Notes

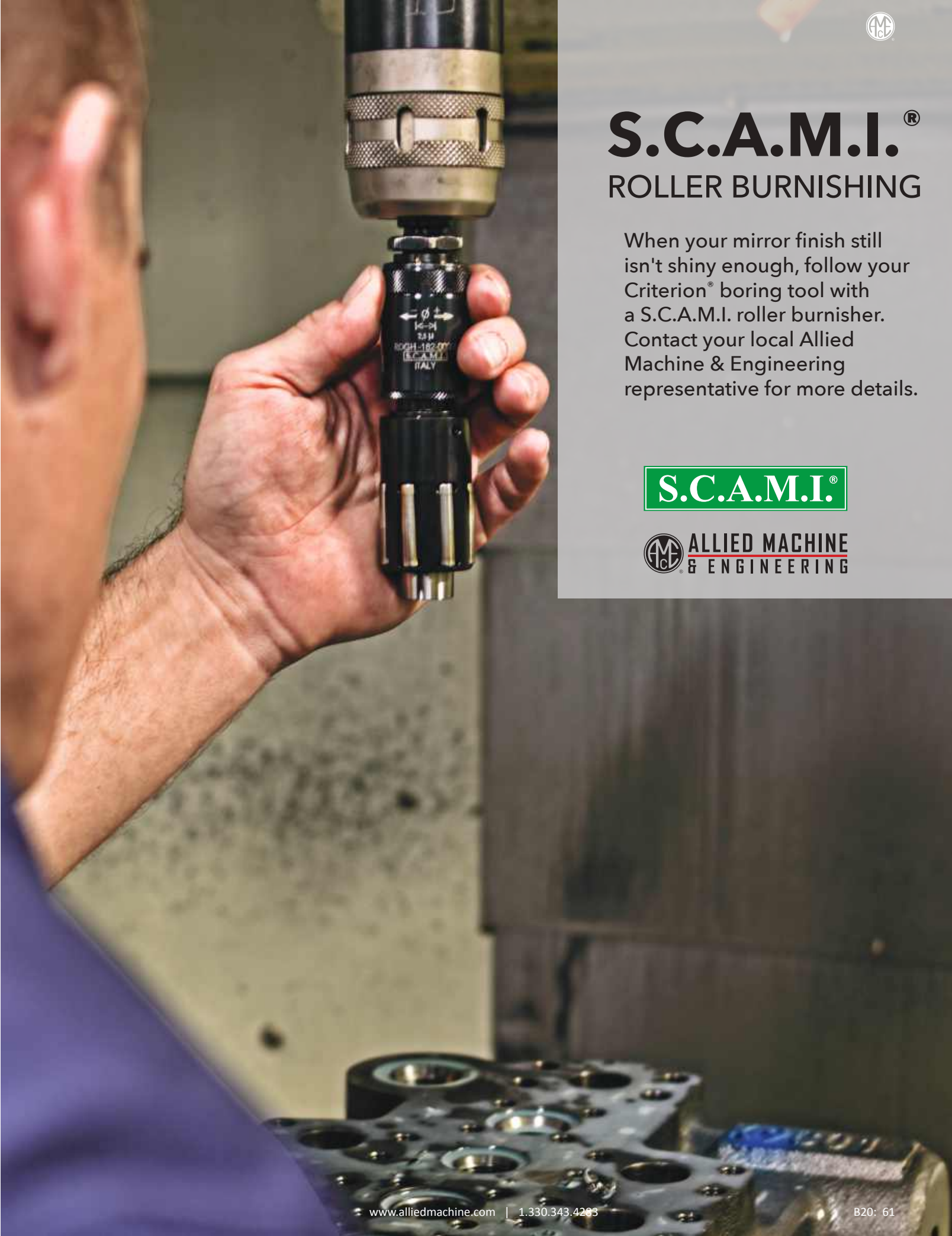
S.C.A.M.I.®
ROLLER BURNISHING
When your mirror finish still isn't shiny enough, follow your Criterion® boring tool with a S.C.A.M.I. roller burnisher. Contact your local Allied Machine & Engineering representative for more details.
S.C.A.M.I.®
ALLIED MACHINE & ENGINEERING
www.alliedmachine.com | 1.330.343.4283

SECTION C

Reaming

ALVAN® Reamers

Replaceable Head Style | Monobloc Style | Cutting Ring Style

S.C.A.M.I.®

Every Option for Every Application

Allied Machine & Engineering is pleased to offer ALVAN® Reamers through an exclusive supply agreement with S.C.A.M.I. s.n.c., an Italian manufacturer that provides high-quality cutting tools.

In addition to producing close tolerances and dimensional accuracy of machined holes, these high performance reaming products provide lower costs per hole through high penetration rates, making them the ideal choice for finishing holes in a production environment. It can also prove to be an alternative to finish boring by providing more consistent hole sizes and lower cycle times.

Excellent hole tolerances.	Improves hole quality and surface finish.	Expandable design accommodates for wear.

Applicable Industries

Aerospace | Agriculture | Automotive | Firearms | General Machining | Oil & Gas | Renewable Energy

Your safety and the safety of others is very important. This catalog contains important safety messages. Always read and follow all safety precautions.

This triangle is a safety hazard symbol. It alerts you to potential safety hazards that can cause tool failure and serious injury.

When you see this symbol in the catalog, look for a related safety message that may be near this triangle or referred to in the nearby text.

There are safety signal words also used in the catalog. Safety messages follow these words.

WARNING

WARNING (shown above) means that failure to follow the precautions in this message could result in tool failure and serious injury.

NOTICE means that failure to follow the precautions in this message could result in damage to the tool or machine but not result in personal injury.

NOTE and **IMPORTANT** are also used. These are important that you read and follow but are not safety-related.

Visit www.alliedmachine.com for the most up-to-date information and procedures.

Reference Icons
The following icons will appear throughout the catalog to help you navigate between products.

Setup / Assembly Information
Detailed instructions and information regarding the corresponding part(s)

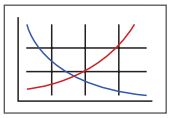

Recommended Cutting Data
Speed and feed recommendations for optimum and safe reaming

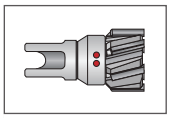

Replaceable Reamer Heads
Refers to the reamer head options that connect to the reamer mandrels

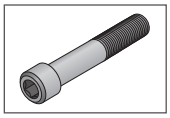

Replaceable Reamer Screws
Refers to the reamer head screw options that connect the head to the reamer mandrels

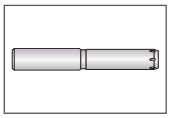

Replaceable Reamer Mandrels
Refers to the reamer mandrel options that connect with the head and screw

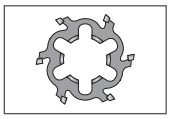

Cutting Rings
Refers to the available cutting ring options

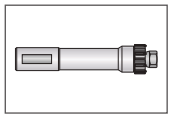

Cutting Ring Mandrels
Refers to the reamer mandrel options that connect with the cutting ring

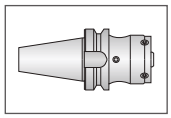

Modular Connection Shanks
Refers to Cerit modular shanks that can connect with reamers

Coolant-Through Option
Indicates that the product is coolant through

S.C.A.M.I.®

Allied Machine & Engineering offers ALVAN® Reamers through an exclusive supply agreement with S.C.A.M.I. s.n.c.

S.C.A.M.I. is an Italian manufacturer that has been producing high-quality cutting tools for over 40 years. In addition to producing close tolerances and dimensional accuracy of machined holes, this high performance reaming product provides a lower cost per hole through its high penetration rates. This makes the ALVAN Reamer product line an ideal choice for finishing holes in a production environment. It can also prove to be an alternative to finish boring by providing more consistent hole sizes and lower cycle times.

For additional information about all Allied Machine products, visit **www.alliedmachine.com.** For technical assistance, contact our Application Engineering department.
ext: **7611** | *email:* **appeng@alliedmachine.com**

ALVAN® Reamers Contents

Introduction Information

Case Study Example 2
Reconditioning Service 3
Reaming Overview and Selection . . . . . 4 - 7
Lead-ins, Coatings, Materials, and Dimples . . . . . 8 - 9

Replaceable Head Reamers

Product Overview 10
Product Nomenclature 11
7000 Series . . . . . 12 - 19
9000 Series . . . . . 20 - 23
5000 Series . . . . . 24 - 26

Monobloc Reamers . . . . . 28 - 35

Ring Style Reamers . . . . . 36 - 59

Shanks and Adapters . . . . . 60 - 67

Recommended Cutting Data

Imperial (in)
- **Replaceable Head Style**
  - 7000 Series . . . . . 68 - 69
  - 9000 Series . . . . . 70 - 71
  - 5000 Series . . . . . 72 - 73
- **Monobloc Style** . . . . . 74 - 75
- **Cutting Ring Style** . . . . . 76 - 77

Metric (mm)
- **Replaceable Head Style**
  - 7000 Series . . . . . 78 - 79
  - 9000 Series . . . . . 80 - 81
  - 5000 Series . . . . . 82 - 83
- **Monobloc Style** . . . . . 84 - 85
- **Cutting Ring Style** . . . . . 86 - 87

Technical Information

Setup
7000 Series 88
9000 Series 89
5000 Series 90
Monobloc Style 91
Cutting Ring Style 92
Diameter Measurement 93
TIR Measurement and Adjustment . . . . . 94 - 95
Troubleshooting Guide 96

Case Study Example

CASE STUDY

Project Profile:	Grey Cast Iron Hydraulic Transmission Component
Tooling Solution:	ALVAN® Reamer - Monobloc Style

The Problem:

Previously, the customer was using a competitor boring tool running at the following parameters:

- 3802 RPM
- 500 SFM
- 0.003 IPR
- 11.41 IPM

With two passes, the tool made a 0.5023" diameter hole to a 1.20" depth.

- Cycle time = 12.6 seconds
- Tool life = 75 parts

Seeking to streamline the production process, the customer needed to increase tool life and lower the cost of production.

The Solution:

Allied Machine recommended the ALVAN® monobloc style reamer.

- **Reamer** = 92440 series carbide, uncoated, V lead

The tool ran at the following parameters:

- 2200 RPM
- 289 SFM
- 0.019 IPR
- 41.80 IPM

The tool achieved the desired diameter and depth, and the results achieved the customer's goals.

- Cycle time = 1.7 seconds
- Tool life = 3,176 parts

The Advantages:

The customer was able to lower the cost of production and increase the tool life.

- Reduced cycle time ***from 12.6 seconds to 1.7 seconds***
- Increased tool life ***from 75 parts to an incredible 3,176 parts***
- Total cost savings = **$2,407 (or 52%)**

The **PROOF** is in the **NUMBERS**

Tool Life: Competitor Boring
(number of parts = 75)

Tool Life: ALVAN® Monobloc Style Reamer
(number of parts = 3,176)

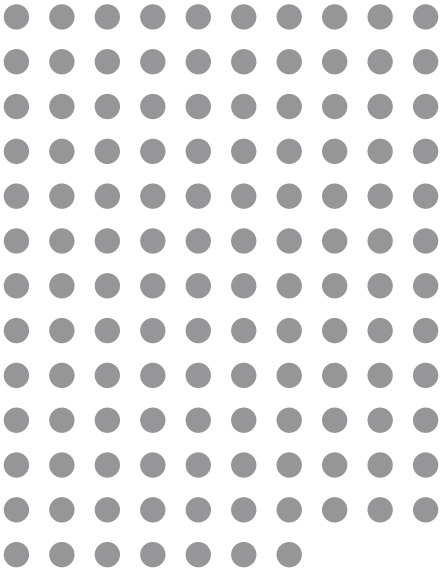

Overall ***SAVINGS*** of

52%

PREMIUM SOLUTION

Reconditioning Service

All ALVAN Reamers can be reconditioned to help reduce your overall tooling costs. This service is provided through Allied Machine & Engineering by utilizing the expertise of S.C.A.M.I. We will process the tools with a 25-35 workday lead time, depending on the style, the date we receive the tools, and the purchase order.

Reamer Style		Lead Time (workdays)	Part No.	Reconditioned Part No.
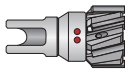	Replaceable Head*	25	I7405-SVG-10000	**R**I7405SVG10000
	Monobloc	35	AL3620I04853	AL3620I04853**RP1**
	Cutting Ring	35	AL2TIAI05820	AL2TIAI05820**RP1**

*Only 7000 series heads are eligible for reconditioning.

Parts to be Reconditioned
(packaged safely)

Purchase Order

Allied Machine & Engineering
Attn: Regrind Department
120 Deeds Drive
Dover, OH 44622
United States

Reaming Overview

REAMER STYLES

Replaceable Head
Pages C: 10 - 26

- Diameter range: 9.600 mm - 80.600 mm.
- Heads are available as fixed or expanding for improved productivity.
- Straight, left-hand, or right-hand helical flutes provide solutions for both through and blind holes.
- Cylindrical or modular shanks improve concentricity.

Monobloc
Pages C: 28 - 35

- Diameter range: 5.800 mm - 32.100 mm.
- Available with central or radial through coolant.
- Can be used for through or blind holes.
- Cylindrical shanks improve concentricity.
- Expandable to accommodate for wear.

Cutting Ring
Pages C: 36 - 59

- Diameter range: 17.600 mm - 200.600 mm.
- The cutting edges are positioned asymmetrically to assure the best roundness of the hole.
- Holes with tight tolerances can be accommodated, and the expansion ensures a perfect holding of the reaming diameter.

General Reaming Notes

- If the depth is over 9xD, use a short length reamer to pilot the hole. Then finish with the longer length ⚠.
- For blind hole applications, always use central coolant. If in doubt, contact Allied's Application Engineering department.
- More stock allowance can be taken in softer materials. Less stock allowance should be taken in harder materials.
- A common practice is to rapid out of the cut on through holes and to breakout only 2 mm past the reaming depth.

IMPORTANT: Always use Molykote® (anti-seize applicant) on the conical seat and the threads on the central screw for assembly.

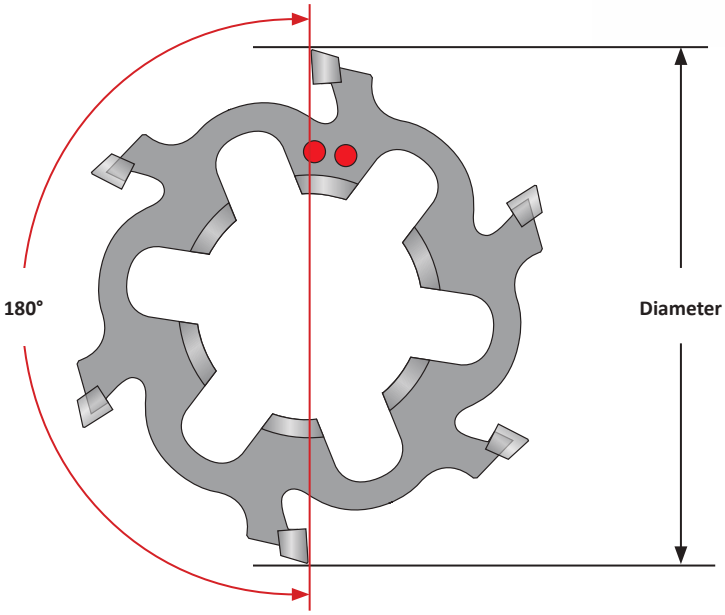

NOTE: The position of the dimples indicates which two cutting teeth are 180° opposed. Diameter measurements should be taken from these two cutting teeth.

⚠ WARNING **Tool failure can cause serious injury. To prevent:**
- When using holders without support bushing, use a shorter reamer to establish the initial hole diameter that is a minimum of 2 diameters deep.
- Do not rotate reamers more than 50 RPM unless it is engaged with the workpiece or fixture.

Factory technical assistance is available for your specific applications through our Application Engineering Team. *ext:* **7611** | *email:* **appeng@alliedmachine.com**

Quick Selection Guide

Breakdown by Diameter

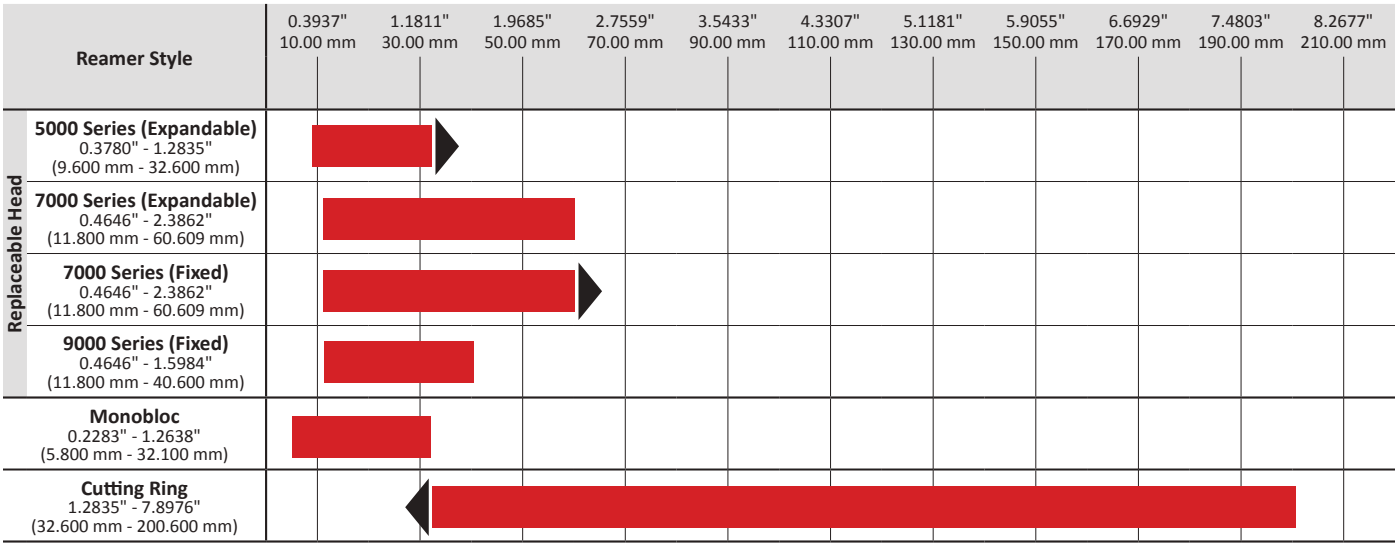

▶ Any product line with a black arrow indicates that nonstandard diameters can be ordered by contacting Application Engineering.

Breakdown by Features

	Reamer Style	Capable Tolerance	Fastest Setup	Replaceable Cutting Head	Expandable to Adjust for Wear	Recondition Available	Cylindrical Shanks	Modular Shanks	Through-Coolant Options
Replaceable Head	5000 Series (expandable)	H6	✓	✓	✓		✓	✓	✓
Replaceable Head	7000 Series (expandable)	H6		✓	✓	✓	✓	✓	✓
Replaceable Head	7000 Series (fixed)	H7	✓	✓		✓	✓	✓	✓
Replaceable Head	9000 Series (fixed)	H7	✓	✓			✓	✓	✓
	Monobloc	H6			✓	✓	✓		✓
	Cutting Ring	H6		✓	✓	✓	✓	✓	✓

For more details on how to select a reamer, see the following pages.

How the Reamer Works

How the Reamer **Works**

- The cut is made in the lead-in zone (3), and the chip is made on the cutting face (1). The chip is removed by coolant.
- The lead-in (3) is defined depending on the application, the workpiece material, and the stock allowance.
- The radial land (2) is important for holding a good alignment, improving the surface roughness, and giving an effect similar to burnishing. The dimension of the radial land depends on the diameter.
- The radial land (2) is manufactured to be tapered on the rear.
- Fixed reamers are manufactured at the exact tapered value. Expandable reamers must be adjusted to the exact diameter. Both are already supplied at the nominal diameter by the manufacturer.
- The undercut of the cutting edge (5) avoids retract marks on the piece when the reamer is retracted from the cut.
- The front of the cutting edge (6) does not cut; if this feature is needed, a frontal lead must be supplied.

When to **Apply** a Reamer

- When the requested tolerance on diameter is IT8 or less.
- When the requested finish is 63 µin (1.6 µmm) Ra or greater.
- When the critical geometry characteristics of the hole are the roundness and straightness .
- When parts are being mass produced.
- When the parts are large and expensive.

Elements of the Cutting Tooth

- (1) Cutting Face
- (2) Radial Land
- (3) Lead-in / Primary Face / Secondary Face
- (4) Rear Face
- (5) Undercut of Cutting Edge
- (6) Front of Cutting Edge

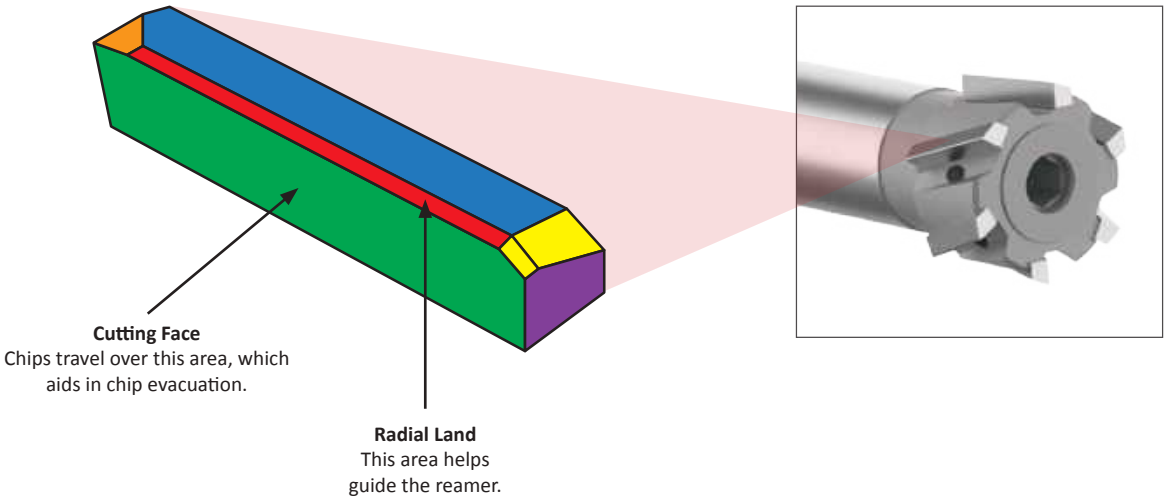

Reamer Recommendation Guide

ISO	Material	Hardness (BHN)	Uninterrupted Cut: Lead, Through Hole, 1 Straight	Uninterrupted Cut: Lead, Through Hole, 2 Left-Hand Helical	Uninterrupted Cut: Lead, Blind Hole, 1 Right-Hand Helical	Uninterrupted Cut: Lead, Blind Hole, 2 Straight	Uninterrupted Cut: Substrate & Coating	Interrupted Cut: Lead, Through Hole, Left-Hand Helical	Interrupted Cut: Lead, Blind Hole, Right-Hand Helical	Interrupted Cut: Substrate & Coating
P	**Free-Machining Steel** 1118, 1215, 12L14, etc.	—	N, K	E	E, K	G, K	Cermet Uncoated	E	E	Carbide TiN
P	**Low-Carbon Steel** 1010, 1020, 1522, 1144, etc.	<250	N, K	E	E, K	G, K	Cermet Uncoated	E	E	Carbide TiN
P	**Medium-Carbon Steel** 1030, 1040, 1050, 1140, 1151, etc.	<300	N, K	E	E, K	G, K	Cermet Uncoated	E	E	Carbide TiAlN
P	**Alloy Steel** 4140, 5140, 8640, etc.	<350	G, K	E	E, K	G, K	Cermet Uncoated	E	E	Carbide TiAlN
P	**High-Strength Alloy** 4340, 4330V, 300M, etc.	240 - 450	G, K	M	M, K	G, K	Carbide Alcrona	M*	M	Carbide Alcrona
P	**Structural Steel**	—	G, K	E	E	G, K	Cermet Alcrona	E	E	Carbide Alcrona
P	**Tool Steel**	—	K	M	M, K	K	Carbide TiAlN	M*	M*	Carbide TiAlN
S	**High-Temp Alloy**	—	G	M	M	G	Carbide TiAlN	M*	M*	Carbide TiAlN
S	**Titanium Alloys**	—	T	—	—	T	Carbide T	E	E	Carbide T
M	**Austenitic Stainless Steel** 304, 316, etc.	—	K	M	M, K	K	Carbide Alcrona	M	M	Carbide Alcrona
M	**Ferritic Martensitic Stainless Steel** 416, 420, 17-4PH, 15-5PH, etc.	—	N	E	K	K	Cermet or Carbide Alcrona	E	E	Carbide Alcrona
K	**Ductile Cast Iron** Spheroidal - GS500	<130	V	E	E	V	Carbide Alcrona	E	E	Carbide Alcrona
K		130+	V	E	E	V	Cermet Alcrona	E	E	Carbide Alcrona
K	**Grey Cast Iron** GC15 - GC20 - GC25 - GC35	—	V	E	E	V	Carbide TiAlN	E	E	Carbide TiAlN
N	**Bronze Brass Copper**	<300	—	E	K	K	Carbide TiN	E	E	Carbide TiN
N	**Aluminum**	< 7% Si	V	E	E	V	Carbide Uncoated	E	E	Carbide Uncoated
N		7% Si+	G	E	E	G	PCD Uncoated	E	E	PCD Uncoated

*Contact our Application Engineering department for special geometries to improve tool life.

Lead-in Angle Information

Straight Flute

Lead-in	Angles	Chip Evacuation	Description
A	45°, 8°		Lead-in can be used to improve finish.
F	90°		Can be used for stock removal at the bottom of the hole. Reduce the feed by 40% of the values on the recommended cutting data pages.
G	45°		Standard and suitable for most materials.
L	75°		May provide improved straightness. Reduce the feed by 40% of the values on the recommended cutting data pages.
N	20°		Ideal for through holes. It is possible to increase the feed up to 100% of the values on the recommended cutting data pages.
T	30°		Suitable for titanium based alloys.
V	45°		Suitable for most materials and increases tool life
K	80°, 0.10x45°		Excellent at breaking small chips that are easy to evacuate in blind hole applications. Requires 50% increased feed rate, which will result in reduced tool life when compared to other leads.

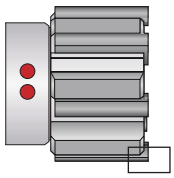

Straight

Helical Flute (Right-Hand) - *Blind Hole Applications Only*

Lead-in	Angles	Chip Evacuation	Description
E	25°		Standard and suitable for most materials.
M	45°		May provide better penetration rates in steels over 200 BHN.
K	80°, 0.10x45°		Excellent at breaking small chips that are easy to evacuate in blind hole applications. Requires 50% increased feed rate, which will result in reduced tool life when compared to other leads.

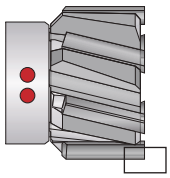

Helical

Helical Flute (Left-Hand) - *Through Hole Applications Only*

Lead-in	Angles	Chip Evacuation	Description
E	25°		Standard and suitable for most materials. **NOTE:** Through hole applications only.
M	45°		May provide better penetration rates in steels over 200 BHN. **NOTE:** Through hole applications only.

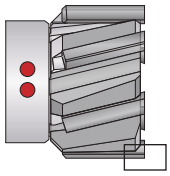

Helical

Coatings, Cutting Materials, and Dimple Indicators

Coating Information

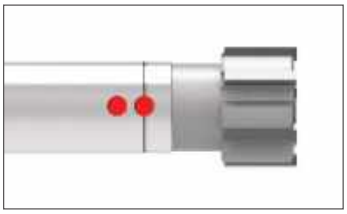

Uncoated
Ideal for nonferrous applications

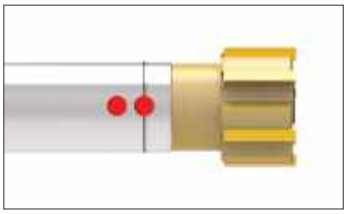

TiN (N)
Ideal for general purpose applications

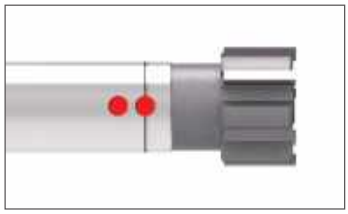

TiAlN (A)
Provides higher heat resistance to improve tool life

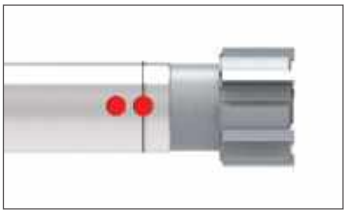

TiCN (C)
Provides improved surface finish

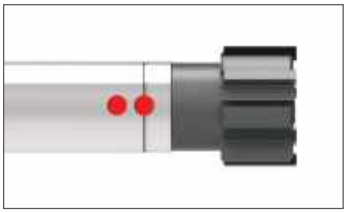

Alcrona (K)
Provides excellent wear resistance and can help increase cutting speeds

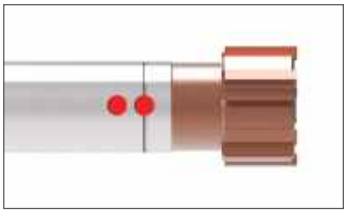

Hardcut (H)
Ideal for cast iron and hardened steel applications

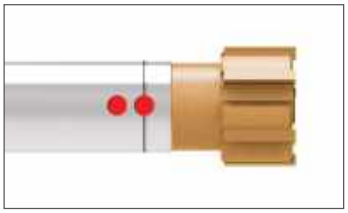

R Coating (R)
Improved tool life in cast iron materials

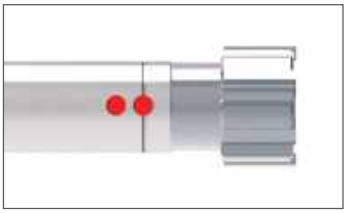

T Coating (T)
Optimized tool life in titanium and very hard materials

Cutting Material Information

Material	Indicator	Details
Carbide	K	A fine-grain carbide suitable for all conventional reaming applications. Recommended where rigidity is not excellent and speeds must be reduced.
Cermet	S	Cermet provides high wear resistance and is recommended for abrasive and increased speed applications. Not recommended for poor rigidity or interrupted cuts.

Dimple Indicators

Material	Replaceable Head Style		Monobloc Style	Cutting Ring Style
	9000 Series	7000 and 5000 Series		
Carbide	Chamfered Profile	Two Dimples	Two Dimples	Two Dimples
Cermet	Sharp Edge Profile	Two Dimples with Line	Two Dimples with Line	Two Dimples with Line

NOTE: The dimple location also indicates which two cutting teeth are 180° opposed.

Replaceable Head Reamers

Product Overview

Expandable Heads

5000 Series	7000 Series
• 0.3780" - 1.2835" (9.600 mm - 32.600 mm) • Heads arrive set to finish diameter and specified tolerance. • Twist-lock heads for precision locating of the head to the mandrel. • Best TIR repeatability from head to head providing consistent tool wear and maximized tool life.	• 0.4646" - 2.3862" (11.800 mm - 60.609 mm) • Multiple diameters within the same arbor reduce inventory requirements. • Coolant configurations for blind and through hole applications. • Reamer head reconditions are available upon request. • Expands up to 1% on diameter to accommodate for wear. • ± 0.0002" (0.005 mm) tolerance capability.

Fixed Heads

7000 Series	9000 Series
• 0.4646" - 2.3862" (11.800 mm - 60.609 mm) • 2.3863" - 3.1732" (60.610 mm - 80.600 mm) diameters available as specials by contacting Application Engineering. • Multiple diameters within the same arbor reduce inventory requirements. • Coolant configurations for blind and through hole applications. • Reamer head reconditions are available upon request. • Nonexpanding diameter for simple on-machine replacement. • H7 tolerance capability.	• 0.4646" - 1.5984" (11.800 mm - 40.600 mm) • Heads are precision ground to finish diameter. • Quick-change heads require minimal downtime for replacement. • Sintered carbide or cermet design provides improved rigidity in difficult applications. • H7 tolerance capability.

Coatings

Uncoated	TiN	TiAlN	TiCN	Alcrona	Hardcut	R Coating	T Coating

Reference Key

Symbol	Attribute
D_1	Reamer head diameter
D_2	Shank diameter
L_1	Overall length
L_2	Length of cut
H	Hex key (listed with screws)

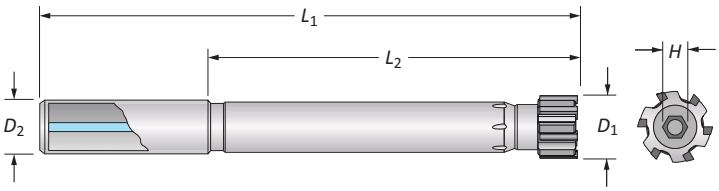

Mandrel Shanks Available:

- Cylindrical
- Modular Connection

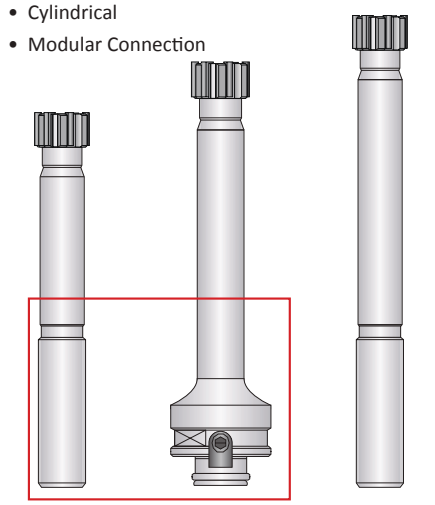

Product Nomenclature

7000 Series Replaceable Reamer Heads

I	7400	–	K	N	G	–	10000
1	2		3	4	5		7

1. Diameter Unit of Measure

Blank = Metric diameter (mm)

I = Imperial diameter (in)

NOTE: For reconditions, put an "R" at the beginning of the item number (7000 series only).

2. Series

Expandable	Fixed
7405	7400
7605	7600
7705	7700

3. Substrate

K = Carbide

S = Cermet

4. Coating

L = Uncoated carbide	**K** = Alcrona
V = Uncoated cermet	**H** = Hardcut
N = TiN	**R** = R coating
C = TiCN	**T** = T coating
A = TiAlN	

5. Lead-in

A, F, G, L, N, T, V = Straight flute

E, M = Helical Flute (right-hand or left-hand)

K = Chipbreaker geometry (straight or right-hand helical)

6. Diameter (D_1)

XXXXX = X.XXXX" (Imperial)

XXXXX = XX.XXX mm (Metric)

Note: Contact Application Engineering about optional add-on features for 7000 series.

9000/5000 Series Replaceable Reamer Heads

I	9700	–	K	N	G	H	–	10000	+	0000	–	0008
1	2		3	4	5	6		7		8		

1. Diameter Unit of Measure

Blank = Metric diameter (mm)

I = Imperial diameter (in)

2. Series

5000 Series	9000 Series
5400	9400
5401	9600
5600	9700
5700	

3. Substrate

K = Carbide

S = Cermet

4. Coating

L = Uncoated carbide	**K** = Alcrona
V = Uncoated cermet	**H** = Hardcut
N = TiN	**R** = R coating
C = TiCN	**T** = T coating
A = TiAlN	

5. Lead-in

A, F, G, L, N, T, V = Straight flute

E, M = Helical Flute (right-hand or left-hand)

K = Chipbreaker geometry (straight or right-hand helical)

6. Optional add-on

Blank = No add-on

H = Half circular face

Z = Double back taper

HZ = Half circular face and double back taper

7. Diameter (D_1)

XXXXX = X.XXXX" (Imperial)

XXXXX = XX.XXX mm (Metric)

8. Tolerance*

4 decimal places = inch tolerance

3 decimal places = mm tolerance

*The total tolerance capable for 5000 series reamers is 0.0002" (0.005 mm) and H7 for 9000 series reamers.

Series Details

Series		5000 Series				7000 Series						9000 Series		
		5400	5401	5600	5700	7405	7605	7705	7400	7600	7700	9400	9600	9700
Flute	Straight	●	●			●			●			●		
	Right-hand helical			●			●			●			●	
	Left-hand helical				●			●			●			●
Head	Fixed								●	●	●	●	●	●
	Expandable	●	●	●	●	●	●	●						
Coolant	Radial *(through hole)*	●			●	–	–	–	–	–	–	–	–	–
	Central *(blind hole)*		●	●		–	–	–	–	–	–	–	–	–

Replaceable Head Reamers

7000 SERIES

0.4646" - 3.1732" *(11.800 mm - 80.600 mm)*

- Features both expandable and fixed diameter heads.
- Multiple diameters within the same arbor reduce inventory requirements.
- Coolant configurations for blind and through hole applications.
- Available with brazed carbide, cermet, or PCD cutting edges.
- Reamer head reconditions are available upon request.

fixed head reamers

- Nonexpanding diameter for simple on-machine replacement.
- H7 tolerance capability.

expandable head reamers

- Expands to accommodate for wear.
- ± 0.0002" (0.005 mm) tolerance capability.

Lead Time in Workdays

7000 Series		2 - 5 pcs	6 - 19 pcs	20+ pcs
Fixed	Coated	20	25	25
	Uncoated	15	20	20
Expandable	Coated	20	25	30
	Uncoated	15	20	25

Building Your Complete Tool

You will need all three pieces to complete your replaceable head reamer assembly. The item numbers for the screws and the mandrels are listed on their respective pages. However, there is a guide on the pages where the heads are located. You must follow the guide to build the item number for the reamer head that you need.

The complete mandrel item numbers are listed on their respective pages. You do not need to build the mandrel numbers.

1

Select Your Head

2

Select Your Screw

3

Select Your Mandrel

Replaceable Heads

Expandable | 7000 Series

Build Your Part No.

1 Series

7405 Series	7605 Series	7705 Series

2 Flute Style

Your flute style is based on your series selection (above).

Straight Flute	Helical Flute (Right-Hand)	Helical Flute (Left-Hand)

3 Carbide Grade and Coating Codes

These are the combinations of grades and coatings you can choose from.

	Uncoated	TiN	TiCN	TiAlN	Alcrona	Hardcut	R Coating	T Coating
Carbide	KL	KN	KC	KA	KK	KH	KR	KT
Cermet	SV	SN	SC	SA	SK	SH	SR	ST

4 Lead-in Recommendations

	T	F	N	G	L	A	V	K
P			●	●		◐	○	◐
S	●			◐				
M			◐	●				◐
H			◐	●				
K				◐			●	◐
N				●			◐	

	E	M	K
P	●		◐
S	●	◐	
M	●		◐
H	◐	●	
K	◐	●	◐
N	●	◐	

	E	M
P	●	
S	●	◐
M	●	
H	◐	●
K	◐	●
N	●	◐

5 Diameter

For the diameter portion of the item number, refer to the following tables:

Imperial (in)		Metric (mm)	
D_1 Range	Tolerance (min/max)	D_1 Range	Tolerance (min/max)
0.4646 - 0.7086	-0.0002 / +0.0002	11.800 - 18.000	-0.005 / +0.005
0.7087 - 1.1810		18.001 - 30.000	
1.1811 - 1.5747		30.001 - 40.000	
1.5748 - 1.9684		40.001 - 50.000	
1.9685 - 2.3862		50.001 - 60.609	

● Best ◐ Better ○ Good

Ordering Example:

The customer needs the following:

- Straight fluted 7000 series reamer head
- Expandable style
- Carbide
- TiN coating
- G lead-in
- 50.000 mm diameter

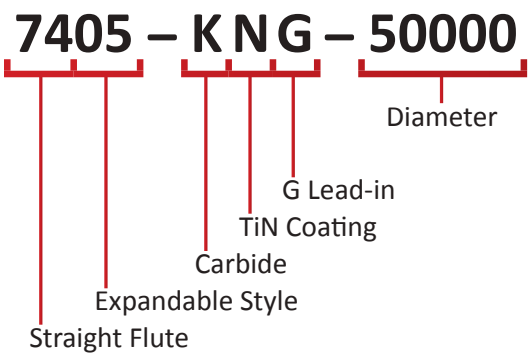

C: 68 - 87

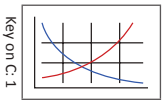

Key on C: 1

C: 15 - 16

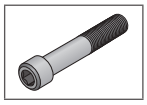

C: 17 - 19

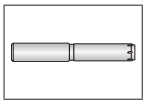

C: 60 - 65

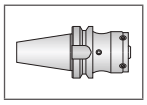

C: 88

A DRILLING
B BORING
C REAMING
D BURNISHING
E THREADING
X SPECIALS

Replaceable Heads

Fixed | 7000 Series

Build Your Part No.

1 Series

7400 Series	7600 Series	7700 Series

2 Flute Style

Your flute style is based on your series selection (above).

Straight Flute	Helical Flute (Right-Hand)	Helical Flute (Left-Hand)

3 Carbide Grade and Coating Codes

These are the combinations of grades and coatings you can choose from.

	Uncoated	TiN	TiCN	TiAlN	Alcrona	Hardcut	R Coating	T Coating
Carbide	KL	KN	KC	KA	KK	KH	KR	KT
Cermet	SV	SN	SC	SA	SK	SH	SR	ST

4 Lead-in Recommendations

	T	F	N	G	L	A	V	K
P			●	●		◐	○	◐
S	●			◐				
M			◐	●				◐
H			◐	●				
K				◐			●	◐
N				●			◐	

	E	M	K
P	●		◐
S	●	◐	
M	●		◐
H	◐	●	
K	◐	●	◐
N	●	◐	

	E	M
P	●	
S	●	◐
M	●	
H	◐	●
K	◐	●
N	●	◐

5 Diameter (H7 Tolerance)

For the diameter portion of the item number, refer to the following tables:

Imperial (in)		Metric (mm)	
D_1 Range	Tolerance (min/max)	D_1 Range	Tolerance (min/max)
0.4646 - 0.7086	+0 / +0.0007	11.800 - 18.000	+0 / +0.018
0.7087 - 1.1810	+0 / +0.0008	18.001 - 30.000	+0 / +0.021
1.1811 - 1.9684	+0 / +0.0010	30.001 - 50.000	+0 / +0.025
1.9685 - 2.3862	+0 / +0.0012	50.001 - 60.609	+0 / +0.030

2.3863" - 3.1732" (60.610 mm - 80.600 mm) diameters are available as specials by contacting Application Engineering.

● Best ◐ Better ○ Good

Ordering Example:

The customer needs the following:

- Straight fluted 7000 series reamer head
- Fixed style
- Carbide
- TiN coating
- G lead-in
- 2.0000" diameter
- H7 tolerance +0/ +0.0012" for 2.0000" diameter

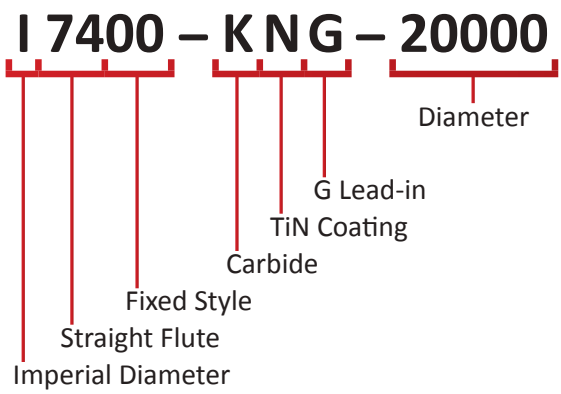

C: 68 - 87 C: 15 - 16 C: 17 - 19 C: 60 - 65 C: 88
Key on C: 1

Replaceable Head Screws

Fixed | 7000 Series

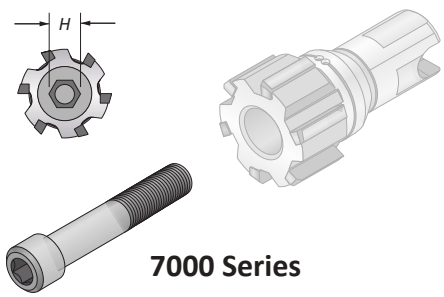

7000 Series

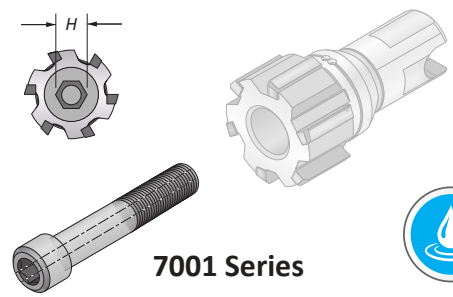

7001 Series

D_1 Range* Imperial (in)	D_1 Range* Metric (mm)	Part No.	*H* (mm)
0.4646 - 0.5751	11.800 - 14.609	**7000-VI-001**	2.5
0.5752 - 0.6932	14.610 - 17.609	**7000-VI-002**	3
0.6933 - 0.8507	17.610 - 21.609	**7000-VI-003**	4
0.8508 - 1.0475	21.610 - 26.609	**7000-VI-004**	5
1.0476 - 1.2838	26.610 - 32.609	**7000-VI-005**	6
1.2839 - 1.5987	32.610 - 40.609	**7000-VI-006**	6
1.5988 - 1.9924	40.610 - 50.609	**7000-VI-007**	8
1.9925 - 2.3862	50.610 - 60.609	**7000-VI-008**	10
2.3863 - 3.1732	60.610 - 80.600	**7000-VI-009**	12

D_1 Range* Imperial (in)	D_1 Range* Metric (mm)	Part No.	*H* (mm)
0.4646 - 0.5751	11.800 - 14.609	**7001-VI-001**	2.5
0.5752 - 0.6932	14.610 - 17.609	**7001-VI-002**	3
0.6933 - 0.8507	17.610 - 21.609	**7001-VI-003**	4
0.8508 - 1.0475	21.610 - 26.609	**7001-VI-004**	5
1.0476 - 1.2838	26.610 - 32.609	**7001-VI-005**	6
1.2839 - 1.5987	32.610 - 40.609	**7001-VI-006**	6
1.5988 - 1.9924	40.610 - 50.609	**7001-VI-007**	8
1.9925 - 2.3862	50.610 - 60.609	**7001-VI-008**	10
2.3863 - 3.1732	60.610 - 80.600	**7001-VI-009**	12

* 2.3863" - 3.1732" (60.610 mm - 80.600 mm) diameter heads are available as specials by contacting Application Engineering.

7000 Series Locking Screws

Radial Coolant Only	No Coolant
7000 Series Mandrels	7001 Series Mandrels

7001 Series Locking Screws

Radial and Central Coolant	Central Coolant Only
7000 Series Mandrels	7001 Series Mandrels

C: 68 - 87 | C: 13 - 14 | C: 17 - 19 | C: 60 - 65 | C: 88

Key on C: 1

Replaceable Head Screws

Expandable | 7000 Series

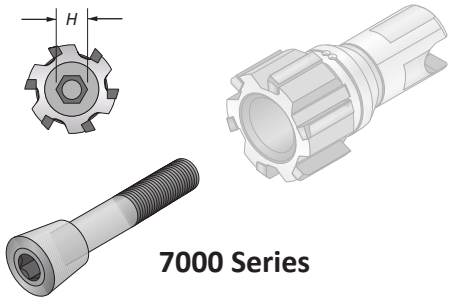

7000 Series

D_1 Range Imperial (in)	D_1 Range Metric (mm)	Part No.	H (mm)
0.4646 - 0.4964	11.800 - 12.609	**7000-VI-012**	3.5
0.4965 - 0.5357	12.610 - 13.609	**7000-VI-013**	3.5
0.5358 - 0.5751	13.610 - 14.609	**7000-VI-014**	3.5
0.5752 - 0.6145	14.610 - 15.609	**7000-VI-015**	4
0.6146 - 0.6538	15.610 - 16.609	**7000-VI-016**	4
0.6539 - 0.6932	16.610 - 17.609	**7000-VI-017**	4
0.6933 - 0.7326	17.610 - 18.609	**7000-VI-018**	5
0.7327 - 0.7719	18.610 - 19.609	**7000-VI-019**	5
0.7720 - 0.8113	19.610 - 20.609	**7000-VI-020**	5
0.8114 - 0.8507	20.610 - 21.609	**7000-VI-021**	5
0.8508 - 0.8901	21.610 - 22.609	**7000-VI-022**	6
0.8902 - 0.9294	22.610 - 23.609	**7000-VI-023**	6
0.9295 - 0.9688	23.610 - 24.609	**7000-VI-024**	6
0.9689 - 1.0082	24.610 - 25.609	**7000-VI-025**	6
1.0083 - 1.0475	25.610 - 26.609	**7000-VI-026**	6
1.0476 - 1.0869	26.610 - 27.609	**7000-VI-027**	8
1.0870 - 1.1263	27.610 - 28.609	**7000-VI-028**	8
1.1264 - 1.1656	28.610 - 29.609	**7000-VI-029**	8
1.1657 - 1.2050	29.610 - 30.609	**7000-VI-030**	8
1.2051 - 1.2444	30.610 - 31.609	**7000-VI-031**	8
1.2445 - 1.2838	31.610 - 32.609	**7000-VI-032**	8
1.2839 - 1.3231	32.610 - 33.609	**7000-VI-033**	10
1.3232 - 1.3625	33.610 - 34.609	**7000-VI-034**	10
1.3626 - 1.4019	34.610 - 35.609	**7000-VI-035**	10
1.4020 - 1.4412	35.610 - 36.609	**7000-VI-036**	10
1.4413 - 1.4806	36.610 - 37.609	**7000-VI-037**	10
1.4807 - 1.5200	37.610 - 38.609	**7000-VI-038**	10
1.5201 - 1.5593	38.610 - 39.609	**7000-VI-039**	10
1.5594 - 1.5987	39.610 - 40.609	**7000-VI-040**	10
1.5988 - 1.6381	40.610 - 41.609	**7000-VI-041**	12
1.6382 - 1.6775	41.610 - 42.609	**7000-VI-042**	12
1.6776 - 1.7168	42.610 - 43.609	**7000-VI-043**	12
1.7169 - 1.7562	43.610 - 44.609	**7000-VI-044**	12
1.7563 - 1.7956	44.610 - 45.609	**7000-VI-045**	12
1.7957 - 1.8349	45.610 - 46.609	**7000-VI-046**	12
1.8350 - 1.8743	46.610 - 47.609	**7000-VI-047**	12
1.8744 - 1.9137	47.610 - 48.609	**7000-VI-048**	12
1.9138 - 1.9530	48.610 - 49.609	**7000-VI-049**	12
1.9531 - 1.9924	49.610 - 50.609	**7000-VI-050**	12
1.9925 - 2.0318	50.610 - 51.609	**7000-VI-051**	12
2.0319 - 2.0712	51.610 - 52.609	**7000-VI-052**	12
2.0713 - 2.1105	52.610 - 53.609	**7000-VI-053**	12
2.1106 - 2.1499	53.610 - 54.609	**7000-VI-054**	12
2.1500 - 2.1893	54.610 - 55.609	**7000-VI-055**	12
2.1894 - 2.2286	55.610 - 56.609	**7000-VI-056**	12
2.2287 - 2.2680	56.610 - 57.609	**7000-VI-057**	12
2.2681 - 2.3074	57.610 - 58.609	**7000-VI-058**	12
2.3075 - 2.3468	58.610 - 59.609	**7000-VI-059**	12
2.3469 - 2.3862	59.610 - 60.609	**7000-VI-060**	12

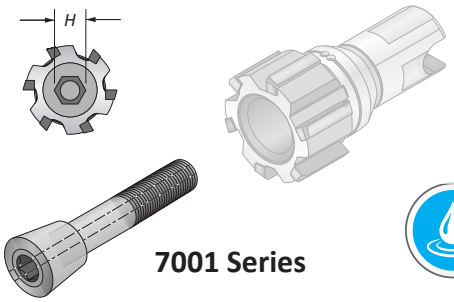

7001 Series

D_1 Range Imperial (in)	D_1 Range Metric (mm)	Part No.	H (mm)
0.4646 - 0.4964	11.800 - 12.609	**7001-VI-012**	3.5
0.4965 - 0.5357	12.610 - 13.609	**7001-VI-013**	3.5
0.5358 - 0.5751	13.610 - 14.609	**7001-VI-014**	3.5
0.5752 - 0.6145	14.610 - 15.609	**7001-VI-015**	4
0.6146 - 0.6538	15.610 - 16.609	**7001-VI-016**	4
0.6539 - 0.6932	16.610 - 17.609	**7001-VI-017**	4
0.6933 - 0.7326	17.610 - 18.609	**7001-VI-018**	5
0.7327 - 0.7719	18.610 - 19.609	**7001-VI-019**	5
0.7720 - 0.8113	19.610 - 20.609	**7001-VI-020**	5
0.8114 - 0.8507	20.610 - 21.609	**7001-VI-021**	5
0.8508 - 0.8901	21.610 - 22.609	**7001-VI-022**	6
0.8902 - 0.9294	22.610 - 23.609	**7001-VI-023**	6
0.9295 - 0.9688	23.610 - 24.609	**7001-VI-024**	6
0.9689 - 1.0082	24.610 - 25.609	**7001-VI-025**	6
1.0083 - 1.0475	25.610 - 26.609	**7001-VI-026**	6
1.0476 - 1.0869	26.610 - 27.609	**7001-VI-027**	8
1.0870 - 1.1263	27.610 - 28.609	**7001-VI-028**	8
1.1264 - 1.1656	28.610 - 29.609	**7001-VI-029**	8
1.1657 - 1.2050	29.610 - 30.609	**7001-VI-030**	8
1.2051 - 1.2444	30.610 - 31.609	**7001-VI-031**	8
1.2445 - 1.2838	31.610 - 32.609	**7001-VI-032**	8
1.2839 - 1.3231	32.610 - 33.609	**7001-VI-033**	10
1.3232 - 1.3625	33.610 - 34.609	**7001-VI-034**	10
1.3626 - 1.4019	34.610 - 35.609	**7001-VI-035**	10
1.4020 - 1.4412	35.610 - 36.609	**7001-VI-036**	10
1.4413 - 1.4806	36.610 - 37.609	**7001-VI-037**	10
1.4807 - 1.5200	37.610 - 38.609	**7001-VI-038**	10
1.5201 - 1.5593	38.610 - 39.609	**7001-VI-039**	10
1.5594 - 1.5987	39.610 - 40.609	**7001-VI-040**	10
1.5988 - 1.6381	40.610 - 41.609	**7001-VI-041**	12
1.6382 - 1.6775	41.610 - 42.609	**7001-VI-042**	12
1.6776 - 1.7168	42.610 - 43.609	**7001-VI-043**	12
1.7169 - 1.7562	43.610 - 44.609	**7001-VI-044**	12
1.7563 - 1.7956	44.610 - 45.609	**7001-VI-045**	12
1.7957 - 1.8349	45.610 - 46.609	**7001-VI-046**	12
1.8350 - 1.8743	46.610 - 47.609	**7001-VI-047**	12
1.8744 - 1.9137	47.610 - 48.609	**7001-VI-048**	12
1.9138 - 1.9530	48.610 - 49.609	**7001-VI-049**	12
1.9531 - 1.9924	49.610 - 50.609	**7001-VI-050**	12
1.9925 - 2.0318	50.610 - 51.609	**7001-VI-051**	12
2.0319 - 2.0712	51.610 - 52.609	**7001-VI-052**	12
2.0713 - 2.1105	52.610 - 53.609	**7001-VI-053**	12
2.1106 - 2.1499	53.610 - 54.609	**7001-VI-054**	12
2.1500 - 2.1893	54.610 - 55.609	**7001-VI-055**	12
2.1894 - 2.2286	55.610 - 56.609	**7001-VI-056**	12
2.2287 - 2.2680	56.610 - 57.609	**7001-VI-057**	12
2.2681 - 2.3074	57.610 - 58.609	**7001-VI-058**	12
2.3075 - 2.3468	58.610 - 59.609	**7001-VI-059**	12
2.3469 - 2.3862	59.610 - 60.609	**7001-VI-060**	12

C: 68 - 87

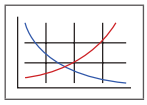

C: 13 - 14

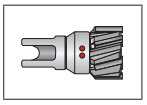

C: 17 - 19

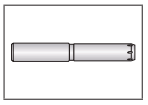

C: 60 - 65

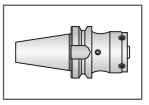

C: 88

Replaceable Head Mandrels

7000 Series | Diameter Range: 0.4646" - 3.1732" (11.800 mm - 80.600 mm)

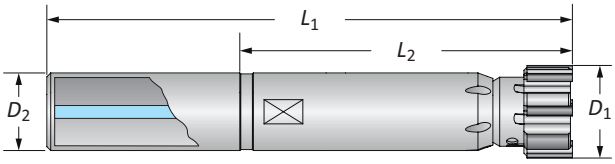

Cylindrical Shank | Short

D_1 Range*		Mandrel				Part No.	
Imperial (in)	Metric (mm)	L_2 (mm)	L_1 (mm)	D_2 (mm)	No. of Teeth	7000 Series	7001 Series
0.4646 - 0.5751	11.800 - 14.609	50	95	12	6	**7000-MC-001**	**7001-MC-001**
0.5752 - 0.6932	14.610 - 17.609	65	113	16	6	**7000-MC-002**	**7001-MC-002**
0.6933 - 0.8507	17.610 - 21.609	75	125	20	6	**7000-MC-003**	**7001-MC-003**
0.8508 - 1.0475	21.610 - 26.609	85	135	20	6	**7000-MC-004**	**7001-MC-004**
1.0476 - 1.2838	26.610 - 32.609	105	161	25	6	**7000-MC-005**	**7001-MC-005**
1.2839 - 1.5987	32.610 - 40.609	120	180	32	6	**7000-MC-006**	**7001-MC-006**
1.5988 - 1.7956	40.610 - 45.609	120	180	32	6	**7000-MC-007**	**7001-MC-007**
1.7957 - 1.9924	45.610 - 50.609	120	180	32	8	**7000-MC-075**	**7001-MC-075**
1.9925 - 2.3862	50.610 - 60.609	120	190	32	8	**7000-MC-008**	**7001-MC-008**
2.3863 - 3.1732	60.610 - 80.600	120	180	32	8/10/12	**7000-MC-009**	—

Cylindrical Shank | Long

D_1 Range*		Mandrel				Part No.	
Imperial (in)	Metric (mm)	L_2 (mm)	L_1 (mm)	D_2 (mm)	No. of Teeth	7000 Series	7001 Series
0.4646 - 0.5751	11.800 - 14.609	95	140	12	6	**7000-ML-001**	**7001-ML-001**
0.5752 - 0.6932	14.610 - 17.609	105	153	16	6	**7000-ML-002**	**7001-ML-002**
0.6933 - 0.8507	17.610 - 21.609	125	175	20	6	**7000-ML-003**	**7001-ML-003**
0.8508 - 1.0475	21.610 - 26.609	145	195	20	6	**7000-ML-004**	**7001-ML-004**
1.0476 - 1.2838	26.610 - 32.609	165	221	25	6	**7000-ML-005**	**7001-ML-005**
1.2839 - 1.5987	32.610 - 40.609	185	245	32	6	**7000-ML-006**	**7001-ML-006**
1.5988 - 1.7956	40.610 - 45.609	185	245	32	6	**7000-ML-007**	**7001-ML-007**
1.7957 - 1.9924	45.610 - 50.609	185	245	32	8	**7000-ML-075**	**7001-ML-075**
1.9925 - 2.3862	50.610 - 60.609	185	255	32	8	**7000-ML-008**	**7001-ML-008**
2.3863 - 3.1732	60.610 - 80.600	185	245	32	8/10/12	**7000-ML-009**	—

*2.3863" - 3.1732" (60.610 mm - 80.600 mm) diameter heads are available as specials by contacting Application Engineering.

7000 Series Mandrels

Radial Coolant Only	Radial and Central Coolant
7000 Series Locking Screw	7001 Series Locking Screw

7001 Series Mandrels

No Coolant	Central Coolant Only
7000 Series Locking Screw	7001 Series Locking Screw

C: 68 - 87

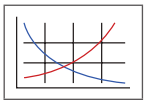

Key on C: 1

C: 13 - 14

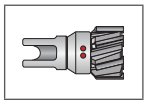

C: 15 - 16

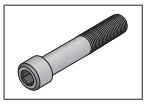

C: 60 - 65

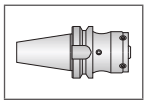

C: 88

Application recommendation:

- Through hole application = radial coolant
- Blind hole application = central coolant

Replaceable Head Mandrels

7000 Series | Diameter Range: 0.4646" - 3.1732" (11.800 mm - 80.600 mm)

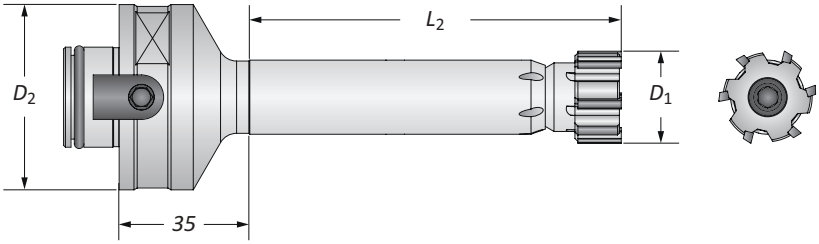

Modular Shank | Standard

D_1 Range*		Mandrel			Part No.	
Imperial (in)	Metric (mm)	L_2 (mm)	D_2 (mm)	No. of Teeth	7000 Series	7001 Series
0.4646 - 0.5751	11.800 - 14.609	65	50	6	**7000-MM-001**	**7001-MM-001**
0.5752 - 0.6932	14.610 - 17.609	80	50	6	**7000-MM-002**	**7001-MM-002**
0.6933 - 0.8507	17.610 - 21.609	90	50	6	**7000-MM-003**	**7001-MM-003**
0.8508 - 1.0475	21.610 - 26.609	100	50	6	**7000-MM-004**	**7001-MM-004**
1.0476 - 1.2838	26.610 - 32.609	110	50	6	**7000-MM-005**	**7001-MM-005**
1.2839 - 1.5987	32.610 - 40.609	120	50	6	**7000-MM-006**	**7001-MM-006**
1.5988 - 1.7956	40.610 - 45.609	120	50	6	**7000-MM-007**	**7001-MM-007**
1.7957 - 1.9924	45.610 - 50.609	120	50	8	**7000-MM-075**	**7001-MM-075**
1.9925 - 2.3862	50.610 - 60.609	120	50	8	**7000-MM-008**	**7001-MM-008**
2.3863 - 3.1732	60.610 - 80.600	120	63	8/10/12	**7000-MM-009**	—

*2.3863" - 3.1732" (60.610 mm - 80.600 mm) diameter heads are available as specials by contacting Application Engineering.

7000 Series Mandrels

Radial Coolant Only	Radial and Central Coolant
7000 Series Locking Screw	7001 Series Locking Screw

7001 Series Mandrels

No Coolant	Central Coolant Only
7000 Series Locking Screw	7001 Series Locking Screw

C: 68 - 87
Key on C: 1
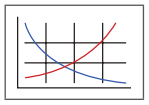
C: 13 - 14
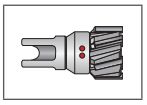
C: 15 - 16
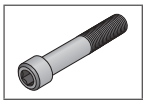
C: 60 - 65
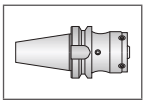
C: 88

Application recommendation:

- Through hole application = radial coolant
- Blind hole application = central coolant

Replaceable Head Mandrels

7000 Series | AR Upper Receiver | Diameter Range: 1.0000" - 1.1875" (25.400 mm - 30.163 mm)

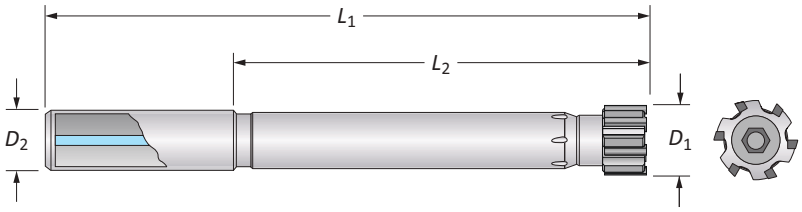

D_1		Mandrel				Part No.
Imperial (in)	Metric (mm)	L_2 (in)	L_1 (in)	D_2 (in)	No. of Teeth	7000 Series
1.1875	30.163	9.65	11.65	0.75	6	**7000-MC-AR10**
1.0000	25.400	8.66	10.63	0.75	6	**7000-MC-AR15**

Achieve the ***long length of cut*** and ***surface finish*** you need.

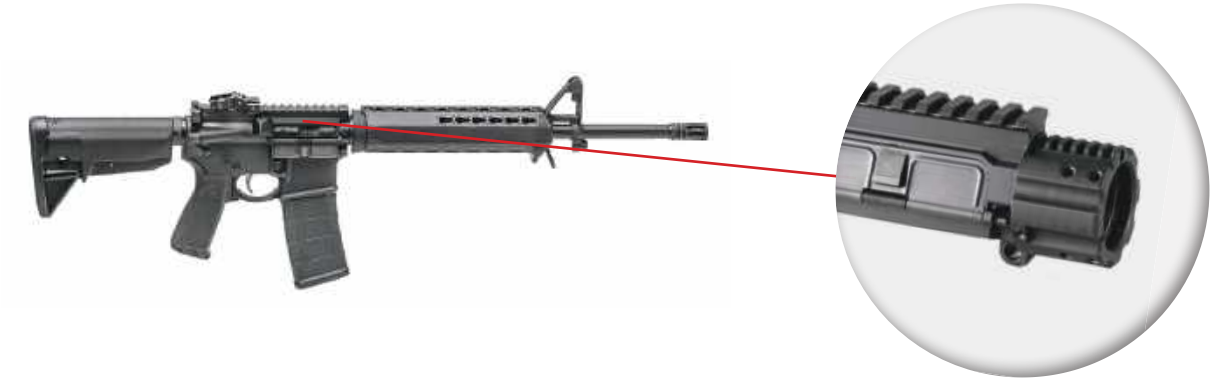

CASE STUDY | AR15 Upper Receiver

Material: 6061 T6 Aluminum

Measure	Carbide-Tipped Chucking Reamer	ALVAN® Replaceable Head Reamer
RPM	1146	2559
Speed	300 SFM	670 SFM
Feed In	0.018 IPR (20.6 IPM)	0.045 IPR (115 IPM)
Feed Out	0.018 IPR (20.6 IPM)	0.090 IPR (230.3 IPM)
Finish	63 Ra	32 Ra
Follow-Up Process	Roller Burnish	None
Cycle Time	0:00:55	0:00:09
Cost Per Hole	$0.77	$0.26
Total Parts	3,500	3,500
Total Cost	$2,691.18	$933.84

SURFACE FINISH 32 Ra
no burnishing required

123% ↑ SPEED

150% ↑ FEED

84% ↓ CYCLE TIME

65% ↓ TOTAL COSTS

C: 68 - 87
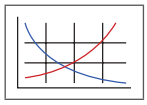
Key on C: 1

C: 13 - 14
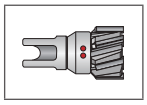

C: 15 - 16
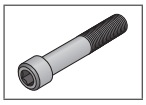

C: 60 - 65
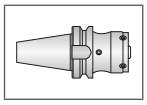

C: 88

Application recommendation:

- Through hole application = radial coolant
- Blind hole application = central coolant

Replaceable Head Reamers

9000 SERIES

0.4646" - 1.5984" *(11.800 mm - 40.600 mm)*

- Features fixed diameter heads.
- Heads are precision ground to finish diameter.
- Quick-change heads require minimal downtime for replacement.
- Sintered carbide or cermet design provides improved rigidity in difficult applications.
- H7 tolerance capability.

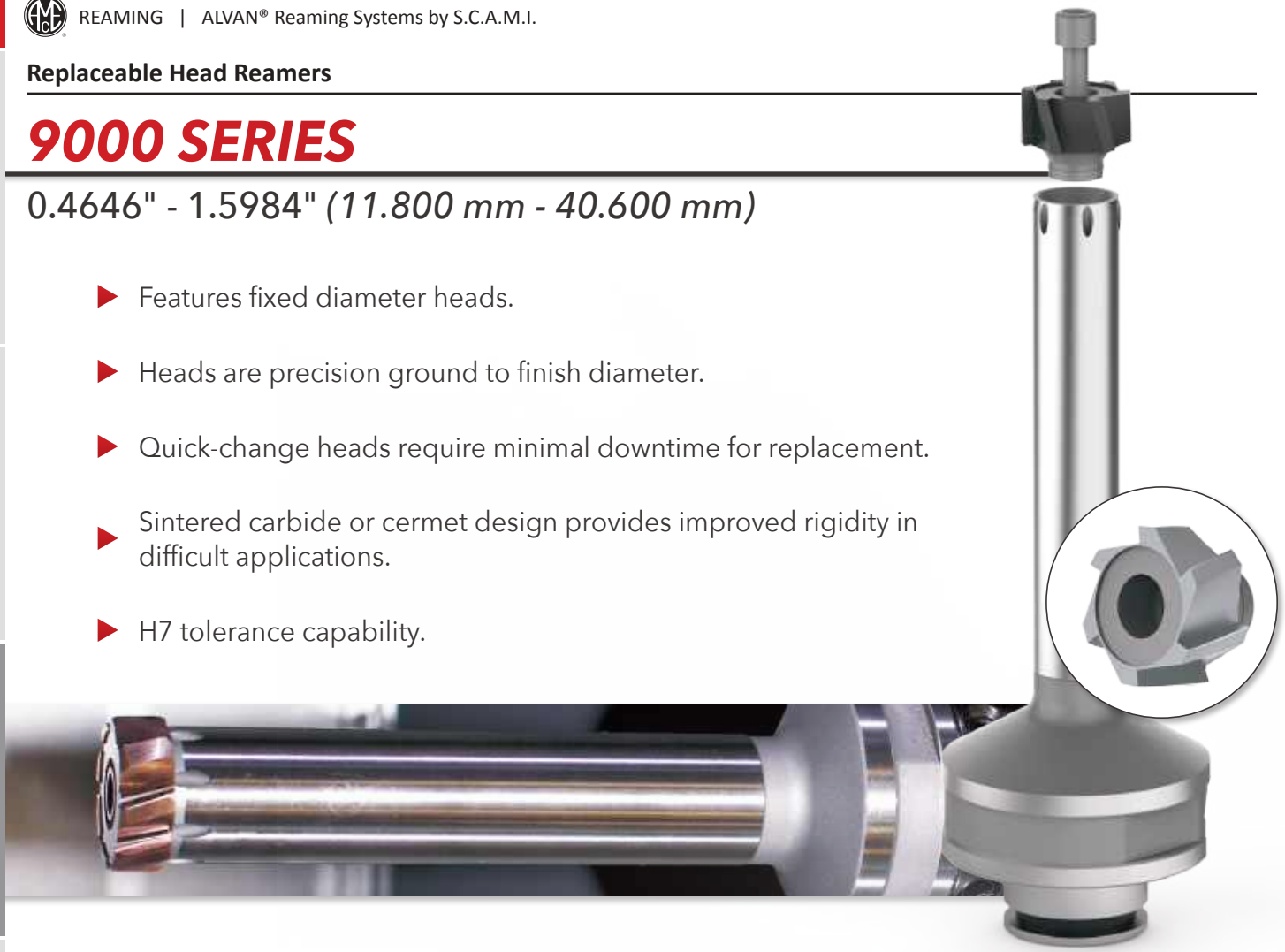

Lead Time in Workdays

9000 Series	2 - 9 pcs	10 - 49 pcs	50 - 99 pcs	100+ pcs
Coated	20	25	30	35
Uncoated	15	20	25	30

Building Your Complete Tool

You will need all three pieces to complete your replaceable head reamer assembly. The item numbers for the screws and the mandrels are listed on their respective pages. However, there is a guide on the pages where the heads are located. You must follow the guide to build the item number for the reamer head that you need.

The complete mandrel item numbers are listed on their respective pages. You do not need to build the mandrel numbers.

1

Select Your Head

2

Select Your Screw

3

Select Your Mandrel

Replaceable Heads

Fixed | 9000 Series

Build Your Part No.

1 Series

9400 Series	9600 Series	9700 Series

2 Flute Style

Your flute style is based on your series selection (above).

Straight Flute	Helical Flute (Right-Hand)	Helical Flute (Left-Hand)

3 Carbide Grade and Coating Codes

These are the combinations of grades and coatings you can choose from.

	Uncoated	TiN	TiCN	TiAlN	Alcrona	Hardcut	R Coating	T Coating
Carbide	KL	KN	KC	KA	KK	KH	KR	KT
Cermet	SV	SN	SC	SA	SK	SH	SR	ST

4 Lead-in Recommendations

	T	F	N	G	L	A	V	K
P			●	●		◐	○	◐
S	●			◐				
M			◐	●				◐
H			◐	●				
K				◐			●	◐
N				●			◐	

	E	M	K
P	●		◐
S	●	◐	
M	●		◐
H	◐	●	
K	◐	●	◐
N	●	◐	

	E	M
P	●	
S	●	◐
M	●	
H	◐	●
K	◐	●
N	●	◐

5 Optional Add-ons

Add-on	Indicator	Description
Half Circular Face	H	Provides improved tool life in materials over 25 Rc.
Double Back Taper	Z	Provides improved tool life in materials over 25 Rc but should not be used in applications requiring less than a 32 Ra surface finish.

6 Diameter (H7 Tolerance)

For the diameter portion of the item number, refer to the following tables:

Imperial (in)		Metric (mm)	
D_1 Range	Tolerance (min/max)	D_1 Range	Tolerance (min/max)
0.4646 - 0.7086	+0 / +0.0007	11.800 - 18.000	+0 / +0.018
0.7087 - 1.1810	+0 / +0.0008	18.001 - 30.000	+0 / +0.021
1.1811 - 1.5984	+0 / +0.0010	30.001 - 40.600	+0 / +0.025

● Best ◐ Better ○ Good

Ordering Example:

The customer needs the following:

- Straight fluted 9000 series reamer head
- Fixed style
- Carbide
- TiN coating
- G lead-in
- Half circular face
- 1.0000" diameter
- H7 tolerance +0/ +0.0008" for 1.0000" diameter

I 9400 – K N G H – 10000 + 0008 – 0000

Diameter
Tolerance
Half circular face
G Lead-in
TiN Coating
Carbide
Fixed Style
Straight Flute
Imperial Diameter

C: 68 - 87 | C: 22 | C: 23 | C: 60 - 65 | C: 89

Key on C: 1

Replaceable Head Screws

Fixed | 9000 Series

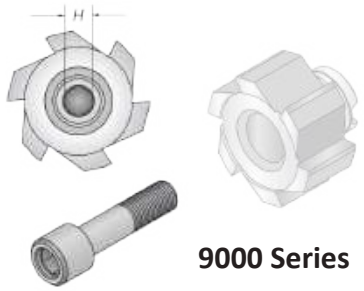

9000 Series

D_1 Range (inch)	D_1 Range (mm)	Part No.	*H* (mm)
0.4646 - 0.5751	11.800 - 14.609	**9000-VI-001**	2.5
0.5752 - 0.6932	14.610 - 17.609	**9000-VI-002**	3
0.6933 - 0.8507	17.610 - 21.609	**9000-VI-003**	4
0.8508 - 1.0475	21.610 - 26.609	**9000-VI-004**	5
1.0476 - 1.2838	26.610 - 32.609	**9000-VI-005**	6
1.2839 - 1.5984	32.610 - 40.600	**9000-VI-006**	6

9000 Series Locking Screws

Radial Coolant Only

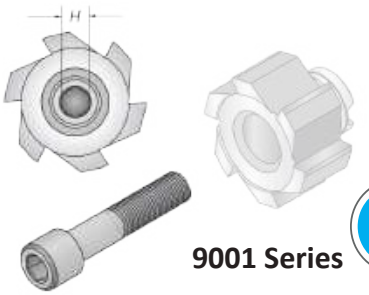

9001 Series

D_1 Range (inch)	D_1 Range (mm)	Part No.	*H* (mm)
0.4646 - 0.5751	11.800 - 14.609	**9001-VI-001**	2.5
0.5752 - 0.6932	14.610 - 17.609	**9001-VI-002**	3
0.6933 - 0.8507	17.610 - 21.609	**9001-VI-003**	4
0.8508 - 1.0475	21.610 - 26.609	**9001-VI-004**	5
1.0476 - 1.2838	26.610 - 32.609	**9001-VI-005**	6
1.2839 - 1.5984	32.610 - 40.600	**9001-VI-006**	6

9001 Series Locking Screws

Central Coolant Only

C: 68 - 87
Key on C: 1
C: 21
C: 23
C: 60 - 65
C: 89

Replaceable Head Mandrels

9000 Series | Diameter Range: 0.4646" - 1.5984" (11.800 mm - 40.600 mm)

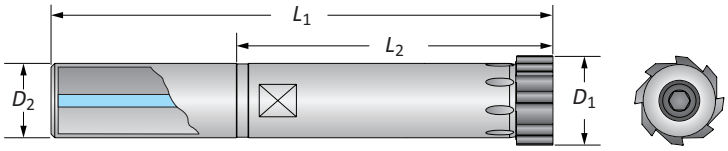

Cylindrical Shank | Short

D_1 Range		Mandrel				
Imperial (in)	Metric (mm)	L_2 (mm)	L_1 (mm)	D_2 (mm)	No. of Teeth	Part No.
0.4646 - 0.5751	11.800 - 14.609	50.00	95.00	12.00	6	**9000-MC-001**
0.5752 - 0.6932	14.610 - 17.609	65.00	113.00	16.00	6	**9000-MC-002**
0.6933 - 0.8507	17.610 - 21.609	75.00	125.00	20.00	6	**9000-MC-003**
0.8508 - 1.0475	21.610 - 26.609	85.00	135.00	20.00	8	**9000-MC-004**
1.0476 - 1.2838	26.610 - 32.609	105.00	161.00	25.00	8	**9000-MC-005**
1.2839 - 1.4412	32.610 - 36.609	120.00	180.00	32.00	10	**9000-MC-006**
1.4413 - 1.5984	36.610 - 40.600	120.00	180.00	32.00	10	**9000-MC-007**

Cylindrical Shank | Long

D_1 Range		Mandrel				
Imperial (in)	Metric (mm)	L_2 (mm)	L_1 (mm)	D_2 (mm)	No. of Teeth	Part No.
0.4646 - 0.5751	11.800 - 14.609	95.00	140.00	12.00	6	**9000-ML-001**
0.5752 - 0.6932	14.610 - 17.609	105.00	153.00	16.00	6	**9000-ML-002**
0.6933 - 0.8507	17.610 - 21.609	125.00	175.00	20.00	6	**9000-ML-003**
0.8508 - 1.0475	21.610 - 26.609	145.00	195.00	20.00	8	**9000-ML-004**
1.0476 - 1.2838	26.610 - 32.609	165.00	221.00	25.00	8	**9000-ML-005**
1.2839 - 1.4412	32.610 - 36.609	185.00	245.00	32.00	10	**9000-ML-006**
1.4413 - 1.5984	36.610 - 40.600	185.00	245.00	32.00	10	**9000-ML-007**

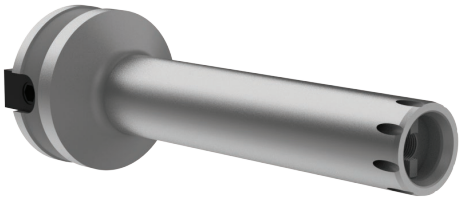

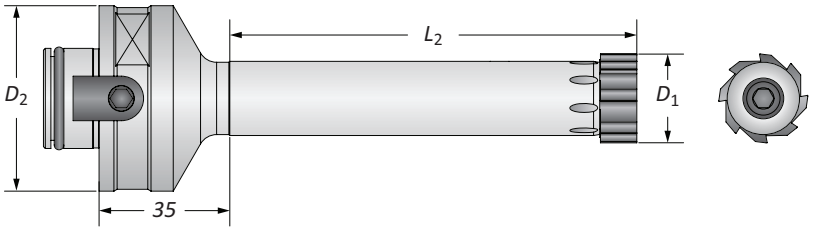

Modular Shank | Standard

D_1 Range		Mandrel			
Imperial (in)	Metric (mm)	L_2 (mm)	D_2 (mm)	No. of Teeth	Part No.
0.4646 - 0.5751	11.800 - 14.609	65.00	50.00	6	**9000-MM-001**
0.5752 - 0.6932	14.610 - 17.609	80.00	50.00	6	**9000-MM-002**
0.6933 - 0.8507	17.610 - 21.609	100.00	50.00	6	**9000-MM-003**
0.8508 - 1.0475	21.610 - 26.609	110.00	50.00	8	**9000-MM-004**
1.0476 - 1.2838	26.610 - 32.609	120.00	50.00	8	**9000-MM-005**
1.2839 - 1.4412	32.610 - 36.609	120.00	50.00	10	**9000-MM-006**
1.4413 - 1.5984	36.610 - 40.600	120.00	50.00	10	**9000-MM-007**

C: 68 - 87

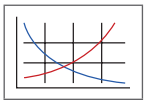

Key on C: 1

C: 21

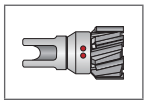

C: 22

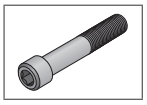

C: 60 - 65

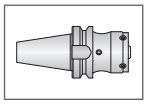

C: 89

Replaceable Head Reamers

5000 SERIES

0.3780" - 1.2835" *(9.600 mm - 32.600 mm)*

- Features expandable diameter heads.
- Heads arrive set to finish diameter and specified tolerance.
- Twist-lock heads for precision locating of the head to the mandrel.
- Best TIR repeatability from head to head providing consistent tool wear and maximized tool life.
- Available with brazed carbide or cermet cutting edges.

Lead Time in Workdays

5000 Series	2 - 9 pcs	10 - 49 pcs	50 - 99 pcs	100+ pcs
Coated	20	25	30	35
Uncoated	15	20	25	30

Building Your Complete Tool

You will need both pieces to complete your replaceable head reamer assembly. The complete mandrel item numbers are listed on their respective pages. However, there is a guide on the pages where the heads are located. You must follow the guide to build the item number for the reamer head that you need.

The 5000 series reamers use a twist lock on reamer head, so the screw is included with the head assembly.

1

Select Your Head

2

Select Your Mandrel

Replaceable Heads

Expandable | 5000 Series

Build Your Part No.

1 Series

5400 Series *Radial Coolant*	5401 Series *Central Coolant*	5600 Series *Central Coolant*	5700 Series *Radial Coolant*

2 Flute Style

Your flute style is based on your series selection (above).

Straight Flute

Helical Flute (Right-Hand)

Helical Flute (Left-Hand)

3 Carbide Grade and Coating Codes

These are the combinations of grades and coatings you can choose from.

	Uncoated	TiN	TiCN	TiAlN	Alcrona	Hardcut	R Coating	T Coating
Carbide	KL	KN	KC	KA	KK	KH	KR	KT
Cermet	SV	SN	SC	SA	SK	SH	SR	ST

4 Lead-in Recommendations

	T	F	N	G	L	A	V	K
P			●	●		◐	○	◐
S	●			◐				
M			◐	●				◐
H			◐	●				
K				◐			●	◐
N				●			◐	

	E	M	K
P	●		◐
S	●	◐	
M	●		◐
H	◐	●	
K	◐	●	◐
N	●	◐	

	E	M
P	●	
S	●	◐
M	●	
H	◐	●
K	◐	●
N	●	◐

5 Optional Add-ons

Add-on	Indicator	Description
Half Circular Face	H	Provides improved tool life in materials over 25 Rc.
Double Back Taper	Z	Provides improved tool life in materials over 25 Rc but should not be used in applications requiring less than a 32 Ra surface finish.

6 Diameter

For the diameter portion of the item number, refer to the following tables:

Imperial (in) D_1 Range	Imperial (in) Tolerance (min/max)	Metric (mm) D_1 Range	Metric (mm) Tolerance (min/max)
0.3780 - 0.4570	-0.0002 / +0.0002	9.600 - 11.609	-0.005 / +0.005
0.4571 - 0.5751		11.610 - 14.609	
0.5752 - 0.6932		14.610 - 17.609	
0.6933 - 0.8507		17.610 - 21.609	
0.8508 - 1.0475		21.610 - 26.609	
1.0476 - 1.2835		26.610 - 32.600	

● Best ◐ Better ○ Good

Ordering Example:

The customer needs the following:

- Straight fluted 5000 series reamer head
- Central coolant configuration (blind holes)
- Fixed style
- Carbide
- TiN coating
- G lead-in
- Half circular face
- 1.0000" diameter
- -0.0002" / +0.0002" tolerance for 1.0000" diameter

I 5401 – K N G H – 10000 + 0002 – 0002

- Imperial Diameter
- Straight Flute
- Central Coolant
- Carbide
- TiN Coating
- G Lead-in
- Half circular face
- Diameter
- Tolerance

C: 68 - 87

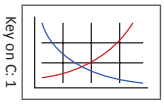

Key on C: 1

C: 26

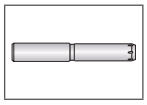

C: 60 - 65

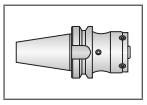

C: 90

A DRILLING
B BORING
C REAMING
D BURNISHING
E THREADING
X SPECIALS

Replaceable Head Mandrels

5000 Series | Diameter Range: 0.3780" - 1.2835" (9.600 mm - 32.600 mm)

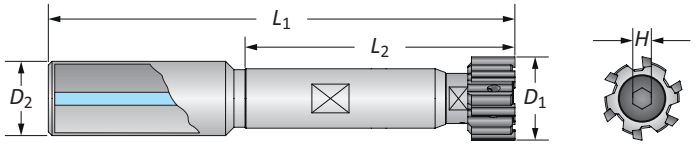

Cylindrical Shank | Short

D_1 Range		Mandrel			H (mm)	No. of Teeth	Part No.	Wrench
Imperial (in)	Metric (mm)	L_2 (mm)	L_1 (mm)	D_2 (mm)				
0.3780 - 0.4570	9.600 - 11.609	50.00	95.00	12.00	3	6	**5000-MC-001**	5000-CH-007
0.4571 - 0.5751	11.610 - 14.609	50.00	95.0	12.00	3.5	6	**5000-MC-002**	5000-CH-008
0.5752 - 0.6932	14.610 - 17.609	65.00	113.00	16.00	4	6	**5000-MC-003**	5000-CH-010
0.6933 - 0.8507	17.610 - 21.609	75.00	125.00	20.00	5	6	**5000-MC-004**	5000-CH-012
0.8508 - 1.0475	21.610 - 26.609	85.00	135.00	20.00	6	6	**5000-MC-005**	5000-CH-015
1.0476 - 1.2835	26.610 - 32.600	105.00	161.00	25.00	8	6	**5000-MC-006**	5000-CH-019

Cylindrical Shank | Long

D_1 Range		Mandrel			H (mm)	No. of Teeth	Part No.	Wrench
Imperial (in)	Metric (mm)	L_2 (mm)	L_1 (mm)	D_2 (mm)				
0.3780 - 0.4570	9.600 - 11.609	95.00	140.00	12.00	3	6	**5000-ML-001**	5000-CH-007
0.4571 - 0.5751	11.610 - 14.609	95.00	140.00	12.00	3.5	6	**5000-ML-002**	5000-CH-008
0.5752 - 0.6932	14.610 - 17.609	105.00	153.00	16.00	4	6	**5000-ML-003**	5000-CH-010
0.6933 - 0.8507	17.610 - 21.609	125.00	175.00	20.00	5	6	**5000-ML-004**	5000-CH-012
0.8508 - 1.0475	21.610 - 26.609	145.00	195.00	20.00	6	6	**5000-ML-005**	5000-CH-015
1.0476 - 1.2835	26.610 - 32.600	165.00	221.00	25.00	8	6	**5000-ML-006**	5000-CH-019

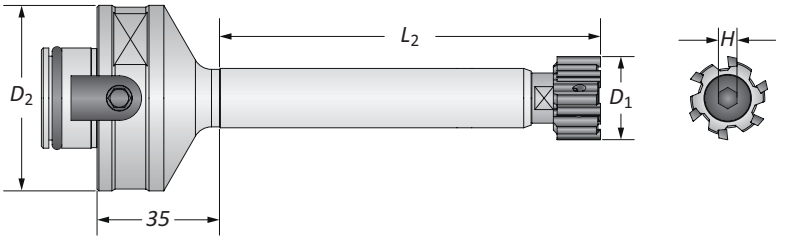

Modular Shank | Standard

D_1 Range		Mandrel	H (mm)	No. of Teeth	Part No.	Wrench
Imperial (in)	Metric (mm)	L_2 (mm)				
0.3780 - 0.4570	9.600 - 11.609	65.00	3	6	**5000-MM-001**	5000-CH-007
0.4571 - 0.5751	11.610 - 14.609	65.00	3.5	6	**5000-MM-002**	5000-CH-008
0.5752 - 0.6932	14.610 - 17.609	80.00	4	6	**5000-MM-003**	5000-CH-010
0.6933 - 0.8507	17.610 - 21.609	100.00	5	6	**5000-MM-004**	5000-CH-012
0.8508 - 1.0475	21.610 - 26.609	110.00	6	6	**5000-MM-005**	5000-CH-015
1.0476 - 1.2835	26.610 - 32.600	120.00	8	6	**5000-MM-006**	5000-CH-019

C: 68 - 87

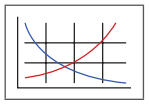

Key on C: 1

C: 25

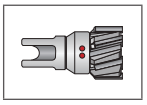

C: 60 - 65

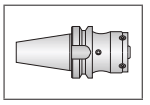

C: 90

Notes

Monobloc Style Reamers

Product Overview

Monobloc Reamer Features
• Diameter range: 0.2283" - 1.2638" (5.800 mm - 32.100 mm).
• Available with straight or left-hand helical flutes.
• Expands to accommodate for wear.
• Available with cylindrical shanks only.
• Workday lead time 15 - 25 days (quantity dependent).
• Available for recondition.

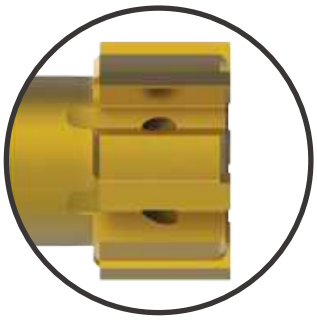

Straight Flute

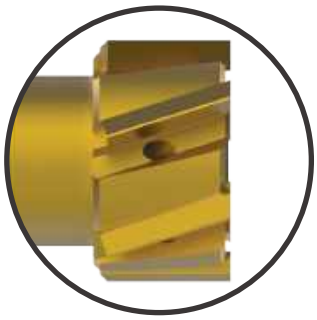

Left-Hand Helical Flute

Uncoated | TiN Coated | TiAlN Coated | TiCN Coated | Alcrona Coated | Hardcut Coated | R Coated | T Coated

Straight Flute - Through or Blind Holes

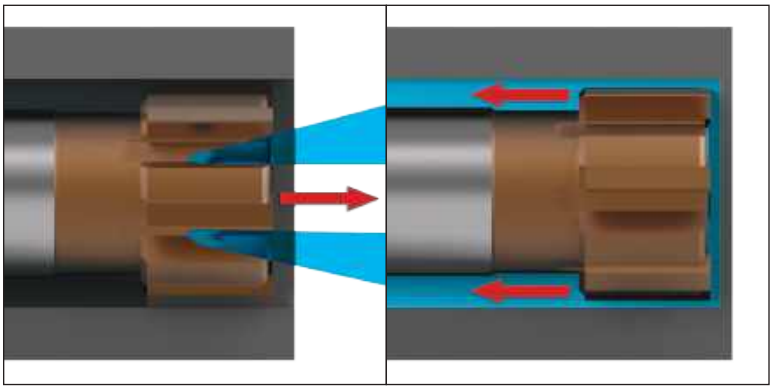

Use for either through hole or blind hole applications. The coolant flow determines the direction of the chip evacuation.

Left-Hand Helical Flute - Through Holes Only

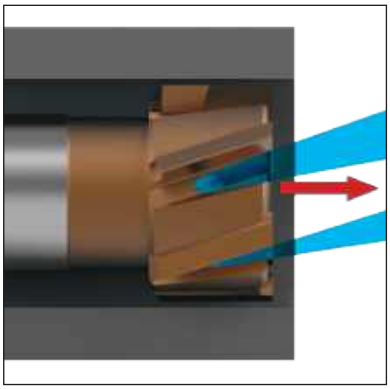

Use when reaming through hole applications. The cutting action of the helical flutes forces the chips forward for evacuation.

Product Nomenclature

Monobloc Style Reamers

I	9	3627	–	KL	E	–	006250	+	0000	–	0005
1	2	3		4	5		6		7		

NOTE: If diameter and tolerance are specified in inch units, put an "**I**" at the beginning of the item number.

1. Diameter Unit of Measure

Blank = Metric diameter (mm)

I = Imperial diameter (in)

2. Shank Measure

Blank = Metric

9 = Inch

3. Series

2441 = Short length, straight flute - central coolant (blind holes)

3620 = Short length, straight flute - radial coolant (through holes)

3627 = Short length, helical flute - radial coolant (through holes)

2431 = Long length, straight flute - central coolant (blind holes)

3610 = Long length, straight flute - radial coolant (through holes)

3617 = Long length, helical flute - radial coolant (through holes)

4. Substrate and Coating

KL = Uncoated carbide
KN = TiN coated carbide
KC = TiCN coated carbide
KA = TiAlN coated carbide
KK = Alcrona coated carbide
KH = Hardcut coated carbide
KR = R coated carbide
KT = T coated carbide

SV = Uncoated cermet
SN = TiN coated cermet
SC = TiCN coated cermet
SA = TiAlN coated cermet
SK = Alcrona coated cermet
SH = Hardcut coated cermet
SR = R coated cermet
ST = T coated cermet

5. Lead-in

E, M = Left-hand helical flute

A, F, G, L, N, T, V, K = Straight flute

K = Chipbreaker geometry for straight or helical flute

6. Diameter

XX.XXXX = Imperial (inch)

XXX.XXX = Metric (mm)

7. Tolerance*

4 decimal places = inch tolerance

3 decimal places = mm tolerance

*The total tolerance capable is 0.0002" (0.005 mm)

Reference Key

Symbol	Attribute
D_1	Reamer diameter
D_2	Shank diameter
L_1	Overall length
L_2	Body length
L_{15}	Cutting edge length
H	Hex key

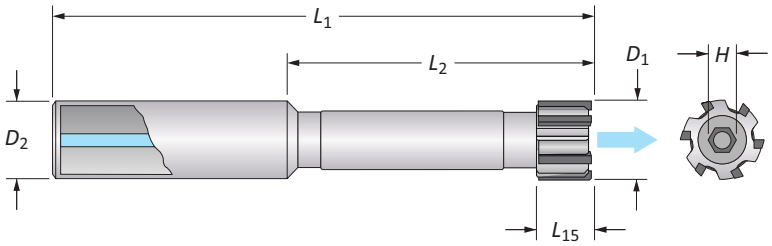

Monobloc Reamers

2441 Series | Short Length | Diameter Range: 0.2283" - 1.2638" (5.800 mm - 32.100 mm)

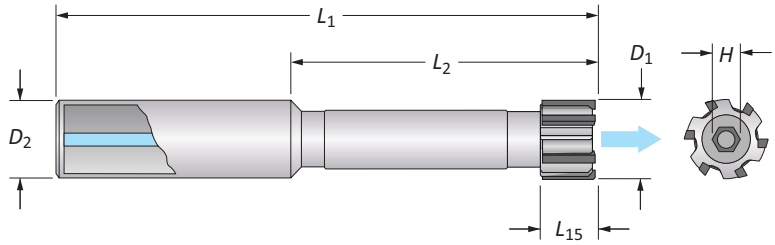

Series	2441	Flute	Straight	Application	Blind Holes	Coolant	Central

Inch Shank Part No. 92441-XXX-D_1+XXXX-XXXX					Metric Shank Part No. 2441-XXX-D_1+XXXX-XXXX						
D_1 Range	L_{15}	L_2	L_1	D_2	D_1 Range	L_{15}	L_2	L_1	D_2	No. of Teeth	H (mm)
0.2283 - 0.2602	0.315	1.575	3.071	0.500	5.800 - 6.609	8	40	80	12	4	1.5
0.2603 - 0.2996	0.315	1.575	3.071	0.500	6.610 - 7.609	8	40	80	12	4	2
0.2997 - 0.3389	0.394	1.575	3.071	0.500	7.610 - 8.609	10	40	80	12	4	2.5
0.3390 - 0.3783	0.394	1.969	3.465	0.500	8.610 - 9.609	10	50	90	12	4	2.5
0.3784 - 0.4177	0.394	1.969	3.740	0.500	9.610 - 10.609	10	50	95	12	6	3
0.4178 - 0.4570	0.394	1.969	3.740	0.500	10.610 - 11.609	10	60	105	12	6	3
0.4571 - 0.4964	0.394	1.969	3.740	0.500	11.610 - 12.609	10	60	105	12	6	3
0.4965 - 0.5358	0.394	1.969	3.740	0.500	12.610 - 13.609	10	60	105	12	6	4
0.5359 - 0.5752	0.394	1.969	3.740	0.500	13.610 - 14.609	10	70	115	12	6	4
0.5753 - 0.6145	0.394	1.969	3.740	0.500	14.610 - 15.609	10	70	115	12	6	4
0.6146 - 0.6539	0.394	1.969	3.937	0.625	15.610 - 16.609	10	80	130	16	6	4
0.6540 - 0.6933	0.394	1.969	3.937	0.625	16.610 - 17.609	10	80	130	16	6	5
0.6934 - 0.7326	0.472	1.969	3.937	0.625	17.610 - 18.609	12	90	140	16	6	5
0.7327 - 0.7523	0.472	2.362	4.724	0.750	18.610 - 19.109	12	90	150	20	6	5
0.7524 - 0.7917	0.472	2.362	4.724	0.750	19.110 - 20.109	12	100	160	20	6	5
0.7918 - 0.8311	0.472	2.362	4.724	0.750	20.110 - 21.109	12	100	160	20	6	5
0.8312 - 0.8704	0.472	2.362	4.724	0.750	21.110 - 22.109	12	100	160	20	6	6
0.8705 - 0.9098	0.472	2.362	4.724	0.750	22.110 - 23.109	12	100	160	20	6	6
0.9099 - 0.9492	0.472	2.362	4.724	0.750	23.110 - 24.109	12	100	160	20	6	6
0.9493 - 0.9885	0.472	2.362	4.724	0.750	24.110 - 25.109	12	100	160	20	6	6
0.9886 - 1.0279	0.472	2.953	5.315	1.000	25.110 - 26.109	16	110	170	25	6	6
1.0280 - 1.0673	0.551	2.953	5.315	1.000	26.110 - 27.109	16	110	170	25	6	6
1.0674 - 1.1067	0.551	2.953	5.315	1.000	27.110 - 28.109	16	110	170	25	6	8
1.1068 - 1.1460	0.551	2.953	5.315	1.000	28.110 - 29.109	16	110	170	25	6	8
1.1461 - 1.1854	0.551	2.953	5.315	1.000	29.110 - 30.109	16	110	170	25	6	8
1.1855 - 1.2248	0.551	2.953	5.315	1.000	30.110 - 31.109	16	110	170	25	6	8
1.2249 - 1.2638	0.551	2.953	5.315	1.000	31.110 - 32.100	16	110	170	25	6	8

Coating and Substrate Code (Part No. 2441-XXX-D_1+XXXX-XXXX)

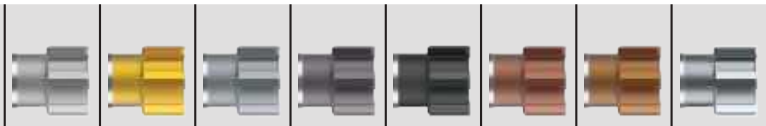

Grade	Uncoated	TiN	TiCN	TiAlN	Alcrona	Hardcut	R Coating	T Coating
Carbide	KL	KN	KC	KA	KK	KH	KR	KT
Cermet	SV	SN	SC	SA	SK	SH	SR	ST

Lead-in (Part No. 2441-XXX-D_1+XXXX-XXXX)

ISO Material	T	F	N	G	L	A	V	K
P			●	●		◐	○	◐
S	●			◐				
M			◐	●				◐
H			◐	●				
K				◐			●	◐
N				●			◐	

● Best ◐ Better ○ Good

Ordering Example

The customer needs:

- Metric shank
- Carbide
- TiN coating
- F lead-in
- 30.60 mm diameter
- Blind hole
- ±0.005 mm tolerance

2441 – KN F – 030600 + 005 – 005

- 2441 – 2441 Series - Metric Shank
- KN – Carbide
- F – TiN Coating
- F – F Lead-in
- 030600 – Diameter
- 005 – 005 – Tolerance

C: 68 - 87

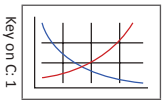

C: 60 - 65

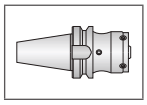

C: 91

Monobloc Reamers

3620 Series | Short Length | Diameter Range: 0.2283" - 1.2638" (5.800 mm - 32.100 mm)

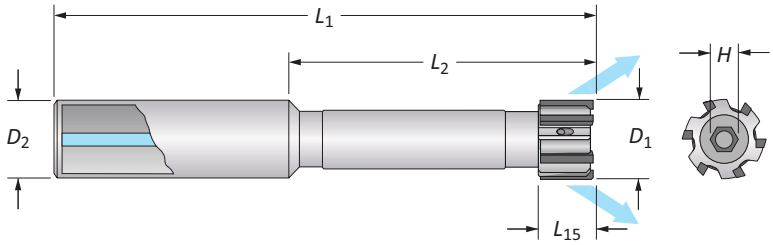

Series	3620	Flute	Straight	Application	Through Holes	Coolant	Radial

Inch Shank Part No. 93620-XXX-D_1+XXXX-XXXX					Metric Shank Part No. 3620-XXX-D_1+XXXX-XXXX						
D_1 Range	L_{15}	L_2	L_1	D_2	D_1 Range	L_{15}	L_2	L_1	D_2	No. of Teeth	H (mm)
0.2283 - 0.2602	0.315	1.575	3.071	0.500	5.800 - 6.609	8	40	78	12	4	1.5
0.2603 - 0.2996	0.315	1.575	3.071	0.500	6.610 - 7.609	8	40	78	12	4	2
0.2997 - 0.3389	0.394	1.575	3.071	0.500	7.610 - 8.609	10	40	78	12	4	2.5
0.3390 - 0.3783	0.394	1.969	3.465	0.500	8.610 - 9.609	10	50	88	12	4	2.5
0.3784 - 0.4177	0.394	1.969	3.740	0.500	9.610 - 10.609	10	50	95	12	6	3
0.4178 - 0.4570	0.394	1.969	3.740	0.500	10.610 - 11.609	10	50	95	12	6	3
0.4571 - 0.4964	0.394	1.969	3.740	0.500	11.610 - 12.609	10	50	95	12	6	3
0.4965 - 0.5358	0.394	1.969	3.740	0.500	12.610 - 13.609	10	50	95	12	6	4
0.5359 - 0.5752	0.394	1.969	3.740	0.500	13.610 - 14.609	10	50	95	12	6	4
0.5753 - 0.6145	0.394	1.969	3.740	0.500	14.610 - 15.609	10	50	95	12	6	4
0.6146 - 0.6539	0.394	1.969	3.937	0.625	15.610 - 16.609	10	50	100	16	6	4
0.6540 - 0.6933	0.394	1.969	3.937	0.625	16.610 - 17.609	10	50	100	16	6	5
0.6934 - 0.7326	0.472	1.969	3.937	0.625	17.610 - 18.609	12	50	100	16	6	5
0.7327 - 0.7523	0.472	2.362	4.724	0.750	18.610 - 19.109	12	60	120	20	6	5
0.7524 - 0.7917	0.472	2.362	4.724	0.750	19.110 - 20.109	12	60	120	20	6	5
0.7918 - 0.8311	0.472	2.362	4.724	0.750	20.110 - 21.109	12	60	120	20	6	5
0.8312 - 0.8704	0.472	2.362	4.724	0.750	21.110 - 22.109	12	60	120	20	6	6
0.8705 - 0.9098	0.472	2.362	4.724	0.750	22.110 - 23.109	12	60	120	20	6	6
0.9099 - 0.9492	0.472	2.362	4.724	0.750	23.110 - 24.109	12	60	120	20	6	6
0.9493 - 0.9885	0.472	2.362	4.724	0.750	24.110 - 25.109	12	60	120	20	6	6
0.9886 - 1.0279	0.472	2.953	5.315	1.000	25.110 - 26.109	16	70	135	25	6	6
1.0280 - 1.0673	0.551	2.953	5.315	1.000	26.110 - 27.109	16	70	135	25	6	6
1.0674 - 1.1067	0.551	2.953	5.315	1.000	27.110 - 28.109	16	70	135	25	6	8
1.1068 - 1.1460	0.551	2.953	5.315	1.000	28.110 - 29.109	16	70	135	25	6	8
1.1461 - 1.1854	0.551	2.953	5.315	1.000	29.110 - 30.109	16	70	135	25	6	8
1.1855 - 1.2248	0.551	2.953	5.315	1.000	30.110 - 31.109	16	70	135	25	6	8
1.2249 - 1.2638	0.551	2.953	5.315	1.000	31.110 - 32.100	16	70	135	25	6	8

Coating and Substrate Code (Part No. 3620-XXX-D_1+XXXX-XXXX)

Grade	Uncoated	TiN	TiCN	TiAlN	Alcrona	Hardcut	R Coating	T Coating
Carbide	KL	KN	KC	KA	KK	KH	KR	KT
Cermet	SV	SN	SC	SA	SK	SH	SR	ST

Lead-in (Part No. 3620-XXX-D_1+XXXX-XXXX)

ISO Material	T	F	N	G	L	A	V	K
P			●	●		◐	○	◐
S	●			◐				
M			◐	●				◐
H			◐	●				
K				◐			●	◐
N				●			◐	

● Best ◐ Better ○ Good

Ordering Example

The customer needs:

- Metric shank
- Carbide
- TiN coating
- F lead-in
- 30.60 mm diameter
- Through hole
- ±0.005 mm tolerance

3620 – KN F – 030600 + 005 – 005

- 3620 – 3620 Series - Metric Shank
- KN – Carbide
- F – TiN Coating
- F – F Lead-in
- 030600 – Diameter
- 005 – 005 – Tolerance

C: 68 - 87

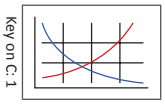

Key on C: 1

C: 60 - 65

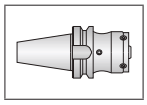

C: 91

Monobloc Reamers

3627 Series | Short Length | Diameter Range: 0.2283" - 1.2638" (5.800 mm - 32.100 mm)

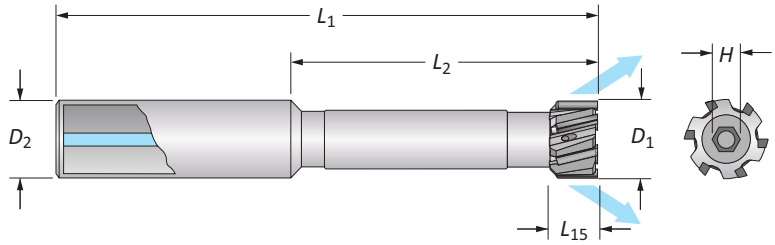

Series	3627	Flute	Helical	Application	Through Holes	Coolant	Radial

Inch Shank Part No. 93627-XXX-D_1+XXXX-XXXX					Metric Shank Part No. 3627-XXX-D_1+XXXX-XXXX						
D_1 Range	L_{15}	L_2	L_1	D_2	D_1 Range	L_{15}	L_2	L_1	D_2	No. of Teeth	H (mm)
0.2283 - 0.2602	0.315	1.575	3.150	0.500	5.800 - 6.609	8	40	80	12	4	1.5
0.2603 - 0.2996	0.315	1.575	3.150	0.500	6.610 - 7.609	8	40	80	12	4	2
0.2997 - 0.3389	0.394	1.575	3.150	0.500	7.610 - 8.609	10	40	80	12	4	2.5
0.3390 - 0.3783	0.394	1.969	3.543	0.500	8.610 - 9.609	10	50	90	12	4	2.5
0.3784 - 0.4177	0.394	1.969	3.740	0.500	9.610 - 10.609	10	50	95	12	6	3
0.4178 - 0.4570	0.394	2.362	4.134	0.500	10.610 - 11.609	10	60	105	12	6	3
0.4571 - 0.4964	0.394	2.362	4.134	0.500	11.610 - 12.609	10	60	105	12	6	3
0.4965 - 0.5358	0.394	2.362	4.134	0.500	12.610 - 13.609	10	60	105	12	6	4
0.5359 - 0.5752	0.394	2.756	4.528	0.500	13.610 - 14.609	10	70	115	12	6	4
0.5753 - 0.6145	0.394	2.756	4.528	0.500	14.610 - 15.609	10	70	115	12	6	4
0.6146 - 0.6539	0.394	3.150	5.118	0.625	15.610 - 16.609	10	80	130	16	6	4
0.6540 - 0.6933	0.394	3.150	5.118	0.625	16.610 - 17.609	10	80	130	16	6	5
0.6934 - 0.7326	0.472	3.543	5.512	0.625	17.610 - 18.609	12	90	140	16	6	5
0.7327 - 0.7523	0.472	3.543	5.906	0.750	18.610 - 19.109	12	90	150	20	6	5
0.7524 - 0.7917	0.472	3.937	6.299	0.750	19.110 - 20.109	12	100	160	20	6	5
0.7918 - 0.8311	0.472	3.937	6.299	0.750	20.110 - 21.109	12	100	160	20	6	5
0.8312 - 0.8704	0.472	3.937	6.299	0.750	21.110 - 22.109	12	100	160	20	6	6
0.8705 - 0.9098	0.472	3.937	6.299	0.750	22.110 - 23.109	12	100	160	20	6	6
0.9099 - 0.9492	0.472	3.937	6.299	0.750	23.110 - 24.109	12	100	160	20	6	6
0.9493 - 0.9885	0.472	3.937	6.299	0.750	24.110 - 25.109	12	100	160	20	6	6
0.9886 - 1.0279	0.472	4.331	6.693	1.000	25.110 - 26.109	16	110	170	25	6	6
1.0280 - 1.0673	0.551	4.331	6.693	1.000	26.110 - 27.109	16	110	170	25	6	6
1.0674 - 1.1067	0.551	4.331	6.693	1.000	27.110 - 28.109	16	110	170	25	6	8
1.1068 - 1.1460	0.551	4.331	6.693	1.000	28.110 - 29.109	16	110	170	25	6	8
1.1461 - 1.1854	0.551	4.331	6.693	1.000	29.110 - 30.109	16	110	170	25	6	8
1.1855 - 1.2248	0.551	4.331	6.693	1.000	30.110 - 31.109	16	110	170	25	6	8
1.2249 - 1.2638	0.551	4.331	6.693	1.000	31.110 - 32.100	16	110	170	25	6	8

Coating and Substrate Code (Part No. 3627-XXX-D_1+XXXX-XXXX)

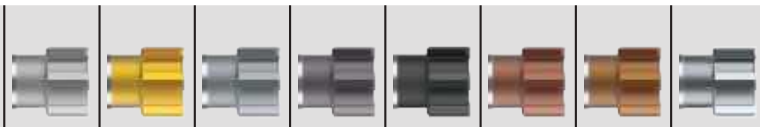

Grade	Uncoated	TiN	TiCN	TiAlN	Alcrona	Hardcut	R Coating	T Coating
Carbide	KL	KN	KC	KA	KK	KH	KR	KT
Cermet	SV	SN	SC	SA	SK	SH	SR	ST

Lead-in (Part No. 3627-XXX-D_1+XXXX-XXXX)

ISO Material	E	M
P	●	
S	●	◐
M	●	
H	◐	●
K	◐	●
N	●	◐

● Best ◐ Better ○ Good

Ordering Example:
The customer needs:
- Metric shank
- Carbide
- TiN coating
- F lead-in
- 30.60 mm diameter
- Through hole
- ±0.005 mm tolerance

3627 – KN F – 030600 + 005 – 005

3627 Series - Metric Shank
Carbide
TiN Coating
F Lead-in
Diameter
Tolerance

C: 68 - 87

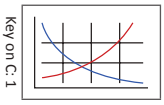

C: 60 - 65

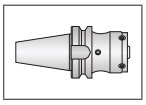

C: 91

Monobloc Reamers

2431 Series | Long Length | Diameter Range: 0.2283" - 1.2638" (5.800 mm - 32.100 mm)

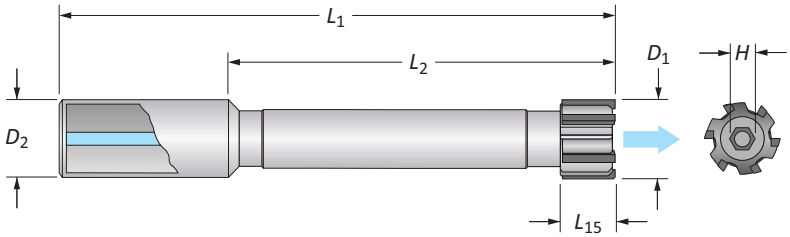

Series	2431	Flute	Straight	Application	Blind Holes	Coolant	Central

Inch Shank Part No. 92431-XXX-D_1+XXXX-XXXX					Metric Shank Part No. 2431-XXX-D_1+XXXX-XXXX						
D_1 Range	L_{15}	L_2	L_1	D_2	D_1 Range	L_{15}	L_2	L_1	D_2	No. of Teeth	H (mm)
0.2283 - 0.2602	0.315	3.346	4.843	0.500	5.800 - 6.609	8	85	123	12	4	1.5
0.2603 - 0.2996	0.315	3.346	4.843	0.500	6.610 - 7.609	8	85	123	12	4	2
0.2997 - 0.3389	0.394	3.346	4.843	0.500	7.610 - 8.609	10	85	123	12	4	2.5
0.3390 - 0.3783	0.394	3.346	4.843	0.500	8.610 - 9.609	10	85	123	12	4	2.5
0.3784 - 0.4177	0.394	4.528	6.299	0.500	9.610 - 10.609	10	115	160	12	6	3
0.4178 - 0.4570	0.394	4.528	6.299	0.500	10.610 - 11.609	10	115	160	12	6	3
0.4571 - 0.4964	0.394	4.528	6.299	0.500	11.610 - 12.609	10	115	160	12	6	3
0.4965 - 0.5358	0.394	4.528	6.299	0.500	12.610 - 13.609	10	115	160	12	6	4
0.5359 - 0.5752	0.394	4.528	6.299	0.500	13.610 - 14.609	10	115	160	12	6	4
0.5753 - 0.6145	0.394	4.528	6.299	0.500	14.610 - 15.609	10	115	160	12	6	4
0.6146 - 0.6539	0.394	5.118	7.087	0.625	15.610 - 16.609	10	130	180	16	6	4
0.6540 - 0.6933	0.394	5.118	7.087	0.625	16.610 - 17.609	10	130	180	16	6	5
0.6934 - 0.7326	0.472	5.118	7.087	0.625	17.610 - 18.609	12	130	180	16	6	5
0.7327 - 0.7523	0.472	5.512	7.874	0.750	18.610 - 19.109	12	140	200	20	6	5
0.7524 - 0.7917	0.472	5.512	7.874	0.750	19.110 - 20.109	12	140	200	20	6	5
0.7918 - 0.8311	0.472	5.512	7.874	0.750	20.110 - 21.109	12	140	200	20	6	5
0.8312 - 0.8704	0.472	5.512	7.874	0.750	21.110 - 22.109	12	140	200	20	6	6
0.8705 - 0.9098	0.472	5.512	7.874	0.750	22.110 - 23.109	12	140	200	20	6	6
0.9099 - 0.9492	0.472	5.512	7.874	0.750	23.110 - 24.109	12	140	200	20	6	6
0.9493 - 0.9885	0.472	5.512	7.874	0.750	24.110 - 25.109	12	140	200	20	6	6
0.9886 - 1.0279	0.472	5.906	8.268	1.000	25.110 - 26.109	16	150	210	25	6	6
1.0280 - 1.0673	0.551	5.906	8.268	1.000	26.110 - 27.109	16	150	210	25	6	6
1.0674 - 1.1067	0.551	5.906	8.268	1.000	27.110 - 28.109	16	150	210	25	6	8
1.1068 - 1.1460	0.551	5.906	8.268	1.000	28.110 - 29.109	16	150	210	25	6	8
1.1461 - 1.1854	0.551	5.906	8.268	1.000	29.110 - 30.109	16	150	210	25	6	8
1.1855 - 1.2248	0.551	5.906	8.268	1.000	30.110 - 31.109	16	150	210	25	6	8
1.2249 - 1.2638	0.551	5.906	8.268	1.000	31.110 - 32.100	16	150	210	25	6	8

Coating and Substrate Code (Part No. 2431-XXX-D_1+XXXX-XXXX)

Grade	Uncoated	TiN	TiCN	TiAlN	Alcrona	Hardcut	R Coating	T Coating
Carbide	KL	KN	KC	KA	KK	KH	KR	KT
Cermet	SV	SN	SC	SA	SK	SH	SR	ST

Lead-in (Part No. 2431-XXX-D_1+XXXX-XXXX)

ISO Material	T	F	N	G	L	A	V	K
P			●	●		◐	○	◐
S	●			◐				
M			◐	●				◐
H			◐	●				
K				◐			●	◐
N				●			◐	

● Best ◐ Better ○ Good

Ordering Example

The customer needs:

- Metric shank
- Carbide
- TiN coating
- F lead-in
- 30.60 mm diameter
- Blind hole
- ±0.005 mm tolerance

2431 – KN F – 030600 + 005 – 005

- 2431 – 2431 Series - Metric Shank
- KN – Carbide
- F – TiN Coating
- F – F Lead-in
- 030600 – Diameter
- 005 – Tolerance

C: 68 - 87 C: 60 - 65 C: 91

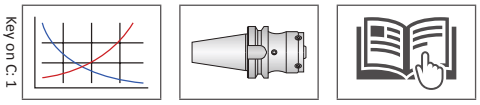

Key on C: 1

Monobloc Reamers

3610 Series | Long Length | Diameter Range: 0.2283" - 1.2638" (5.800 mm - 32.100 mm)

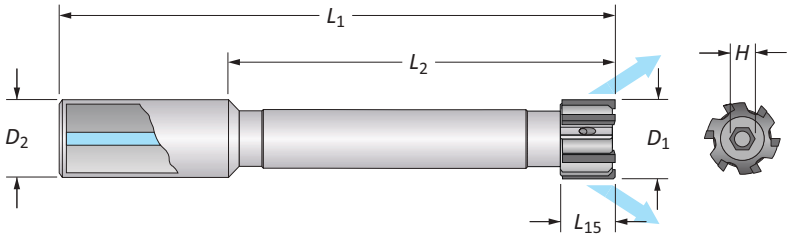

Series	3610	Flute	Straight	Application	Through Holes	Coolant	Radial

Inch Shank Part No. 93610-XXX-D_1+XXXX-XXXX					Metric Shank Part No. 3610-XXX-D_1+XXXX-XXXX						
D_1 Range	L_{15}	L_2	L_1	D_2	D_1 Range	L_{15}	L_2	L_1	D_2	No. of Teeth	H (mm)
0.2283 - 0.2602	0.315	3.346	4.843	0.500	5.800 - 6.609	8	85	123	12	4	1.5
0.2603 - 0.2996	0.315	3.346	4.843	0.500	6.610 - 7.609	8	85	123	12	4	2
0.2997 - 0.3389	0.394	3.346	4.843	0.500	7.610 - 8.609	10	85	123	12	4	2.5
0.3390 - 0.3783	0.394	3.346	4.843	0.500	8.610 - 9.609	10	85	123	12	4	2.5
0.3784 - 0.4177	0.394	4.528	6.299	0.500	9.610 - 10.609	10	115	160	12	6	3
0.4178 - 0.4570	0.394	4.528	6.299	0.500	10.610 - 11.609	10	115	160	12	6	3
0.4571 - 0.4964	0.394	4.528	6.299	0.500	11.610 - 12.609	10	115	160	12	6	3
0.4965 - 0.5358	0.394	4.528	6.299	0.500	12.610 - 13.609	10	115	160	12	6	4
0.5359 - 0.5752	0.394	4.528	6.299	0.500	13.610 - 14.609	10	115	160	12	6	4
0.5753 - 0.6145	0.394	4.528	6.299	0.500	14.610 - 15.609	10	115	160	12	6	4
0.6146 - 0.6539	0.394	5.118	7.087	0.625	15.610 - 16.609	10	130	180	16	6	4
0.6540 - 0.6933	0.394	5.118	7.087	0.625	16.610 - 17.609	10	130	180	16	6	5
0.6934 - 0.7326	0.472	5.118	7.087	0.625	17.610 - 18.609	12	130	180	16	6	5
0.7327 - 0.7523	0.472	5.512	7.874	0.750	18.610 - 19.109	12	140	200	20	6	5
0.7524 - 0.7917	0.472	5.512	7.874	0.750	19.110 - 20.109	12	140	200	20	6	5
0.7918 - 0.8311	0.472	5.512	7.874	0.750	20.110 - 21.109	12	140	200	20	6	5
0.8312 - 0.8704	0.472	5.512	7.874	0.750	21.110 - 22.109	12	140	200	20	6	6
0.8705 - 0.9098	0.472	5.512	7.874	0.750	22.110 - 23.109	12	140	200	20	6	6
0.9099 - 0.9492	0.472	5.512	7.874	0.750	23.110 - 24.109	12	140	200	20	6	6
0.9493 - 0.9885	0.472	5.512	7.874	0.750	24.110 - 25.109	12	140	200	20	6	6
0.9886 - 1.0279	0.472	5.906	8.268	1.000	25.110 - 26.109	16	150	210	25	6	6
1.0280 - 1.0673	0.551	5.906	8.268	1.000	26.110 - 27.109	16	150	210	25	6	6
1.0674 - 1.1067	0.551	5.906	8.268	1.000	27.110 - 28.109	16	150	210	25	6	8
1.1068 - 1.1460	0.551	5.906	8.268	1.000	28.110 - 29.109	16	150	210	25	6	8
1.1461 - 1.1854	0.551	5.906	8.268	1.000	29.110 - 30.109	16	150	210	25	6	8
1.1855 - 1.2248	0.551	5.906	8.268	1.000	30.110 - 31.109	16	150	210	25	6	8
1.2249 - 1.2638	0.551	5.906	8.268	1.000	31.110 - 32.100	16	150	210	25	6	8

Coating and Substrate Code (Part No. 3610-XXX-D_1+XXXX-XXXX)

Grade	Uncoated	TiN	TiCN	TiAlN	Alcrona	Hardcut	R Coating	T Coating
Carbide	KL	KN	KC	KA	KK	KH	KR	KT
Cermet	SV	SN	SC	SA	SK	SH	SR	ST

Lead-in (Part No. 3610-XXX-D_1+XXXX-XXXX)

ISO Material	T	F	N	G	L	A	V	K
P			●	●		◐	○	◐
S	●			◐				
M			◐	●				◐
H			◐	●				
K				◐			●	◐
N				●			◐	

● Best ◐ Better ○ Good

Ordering Example

The customer needs:

- Metric shank
- Carbide
- TiN coating
- F lead-in
- 30.60 mm diameter
- Through hole
- ±0.005 mm tolerance

3610 – KN F – 030600 + 005 – 005

- 3610 – 3610 Series - Metric Shank
- KN – Carbide
- F – TiN Coating
- F – F Lead-in
- 030600 – Diameter
- 005 – 005 – Tolerance

C: 68 - 87

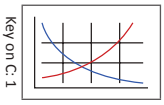

C: 60 - 65

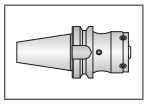

C: 91

Monobloc Reamers

3617 Series | Long Length | Diameter Range: 0.2283" - 1.2638" (5.800 mm - 32.100 mm)

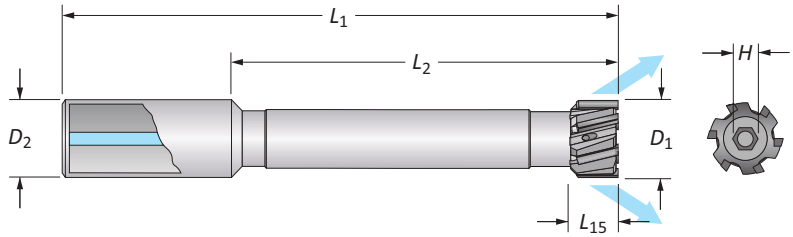

Series	3617	Flute	Helical	Application	Through Holes	Coolant	Radial

Inch Shank Part No. 93617-XXX-D_1+XXXX-XXXX					Metric Shank Part No. 3617-XXX-D_1+XXXX-XXXX						
D_1 Range	L_{15}	L_2	L_1	D_2	D_1 Range	L_{15}	L_2	L_1	D_2	No. of Teeth	H (mm)
0.2283 - 0.2602	0.315	3.346	4.843	0.500	5.800 - 6.609	8	85	123	12	4	1.5
0.2603 - 0.2996	0.315	3.346	4.843	0.500	6.610 - 7.609	8	85	123	12	4	2
0.2997 - 0.3389	0.394	3.346	4.843	0.500	7.610 - 8.609	10	85	123	12	4	2.5
0.3390 - 0.3783	0.394	3.346	4.843	0.500	8.610 - 9.609	10	85	123	12	4	2.5
0.3784 - 0.4177	0.394	4.528	6.299	0.500	9.610 - 10.609	10	115	160	12	6	3
0.4178 - 0.4570	0.394	4.528	6.299	0.500	10.610 - 11.609	10	115	160	12	6	3
0.4571 - 0.4964	0.394	4.528	6.299	0.500	11.610 - 12.609	10	115	160	12	6	3
0.4965 - 0.5358	0.394	4.528	6.299	0.500	12.610 - 13.609	10	115	160	12	6	4
0.5359 - 0.5752	0.394	4.528	6.299	0.500	13.610 - 14.609	10	115	160	12	6	4
0.5753 - 0.6145	0.394	4.528	6.299	0.500	14.610 - 15.609	10	115	160	12	6	4
0.6146 - 0.6539	0.394	5.118	7.087	0.625	15.610 - 16.609	10	130	180	16	6	4
0.6540 - 0.6933	0.394	5.118	7.087	0.625	16.610 - 17.609	10	130	180	16	6	5
0.6934 - 0.7326	0.472	5.118	7.087	0.625	17.610 - 18.609	12	130	180	16	6	5
0.7327 - 0.7523	0.472	5.512	7.874	0.750	18.610 - 19.109	12	140	200	20	6	5
0.7524 - 0.7917	0.472	5.512	7.874	0.750	19.110 - 20.109	12	140	200	20	6	5
0.7918 - 0.8311	0.472	5.512	7.874	0.750	20.110 - 21.109	12	140	200	20	6	5
0.8312 - 0.8704	0.472	5.512	7.874	0.750	21.110 - 22.109	12	140	200	20	6	6
0.8705 - 0.9098	0.472	5.512	7.874	0.750	22.110 - 23.109	12	140	200	20	6	6
0.9099 - 0.9492	0.472	5.512	7.874	0.750	23.110 - 24.109	12	140	200	20	6	6
0.9493 - 0.9885	0.472	5.512	7.874	0.750	24.110 - 25.109	12	140	200	20	6	6
0.9886 - 1.0279	0.472	5.906	8.268	1.000	25.110 - 26.109	16	150	210	25	6	6
1.0280 - 1.0673	0.551	5.906	8.268	1.000	26.110 - 27.109	16	150	210	25	6	6
1.0674 - 1.1067	0.551	5.906	8.268	1.000	27.110 - 28.109	16	150	210	25	6	8
1.1068 - 1.1460	0.551	5.906	8.268	1.000	28.110 - 29.109	16	150	210	25	6	8
1.1461 - 1.1854	0.551	5.906	8.268	1.000	29.110 - 30.109	16	150	210	25	6	8
1.1855 - 1.2248	0.551	5.906	8.268	1.000	30.110 - 31.109	16	150	210	25	6	8
1.2249 - 1.2638	0.551	5.906	8.268	1.000	31.110 - 32.100	16	150	210	25	6	8

Coating and Substrate Code (Part No. 3617-XXX-D_1+XXXX-XXXX)

Grade	Uncoated	TiN	TiCN	TiAlN	Alcrona	Hardcut	R Coating	T Coating
Carbide	KL	KN	KC	KA	KK	KH	KR	KT
Cermet	SV	SN	SC	SA	SK	SH	SR	ST

Lead-in (Part No. 3617-XXX-D_1+XXXX-XXXX)

ISO Material	E	M
P	●	
S	●	◐
M	●	
H	◐	●
K	◐	●
N	●	◐

● Best ◐ Better ○ Good

Ordering Example

The customer needs:

- Metric shank
- Carbide
- TiN coating
- F lead-in
- 30.60 mm diameter
- Through hole
- ±0.005 mm tolerance

3617 – KN F – 030600 + 005 – 005

- 3617 – 3617 Series - Metric Shank
- KN – Carbide
- F – TiN Coating
- F – F Lead-in
- 030600 – Diameter
- 005 – Tolerance

C: 68 - 87

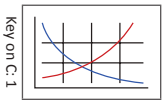

Key on C: 1

C: 60 - 65

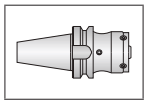

C: 91

Cutting Ring Style Reamers

Product Overview

Cutting Ring Reamer Features
• Diameter range: 0.6929" - 7.8976" (17.600 mm - 200.600 mm). • Available with straight or left-hand helical flutes. • Expands to accommodate for wear. • Mandrels are available for both through holes or blind holes. • Workday lead time 20 - 25 days. • Available for recondition.

Straight Flute

Left-Hand Helical Flute

Uncoated

TiN Coated

TiAlN Coated

TiCN Coated

Alcrona Coated

Hardcut Coated

R Coated

T Coated

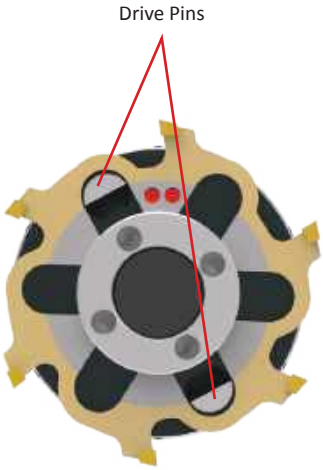

Product Nomenclature

Cutting Rings

I	2ANC-ST	F	–	019686	+	0000	–	0005
1	2	3		4		5		

NOTE: If diameter and tolerance are specified in inch units, put an "**I**" at the beginning of the item number.

1. Diameter Unit of Measure

Blank = Metric diameter (mm)

I = Imperial diameter (in)

2. Coating and Substrate

2000-KT = Uncoated carbide
2TIN-KT = TiN coated carbide
2TIC-KT = TiCN coated carbide
2TIA-KT = TiAlN coated carbide
2TLK-KT = Alcrona coated carbide
2TLH-KT = Hardcut coated carbide
2TLR-KT = R coated carbide
2TLT-KT = T coated carbide

2AVC-ST = Uncoated cermet
2ANC-ST = TiN coated cermet
2ACC-ST = TiCN coated cermet
2AAC-ST = TiAlN coated cermet
2ALK-ST = Alcrona coated cermet
2TLH-ST = Hardcut coated cermet
2TLR-ST = R coated cermet
2TLT-ST = T coated cermet

3. Lead-in

E, M = Left-hand helical flute

A, F, G, L, N, T, V, K = Straight flute

K = Chipbreaker geometry for straight or helical flute

4. Diameter

XX.XXXX = Imperial (inch)

XXX.XXX = Metric (mm)

5. Tolerance

4 decimal places = inch tolerance

3 decimal places = mm tolerance

*The total tolerance capable is 0.0002" (0.005 mm)

Reference Key

Symbol	Attribute
D_1	Reamer diameter
D_2	Shank diameter
D_3	Maximum conical ring diameter
L_1	Overall length
L_2	Length of cut
L_5	Maximum overhang
L_7	Shank length
L_{15}	Flute length

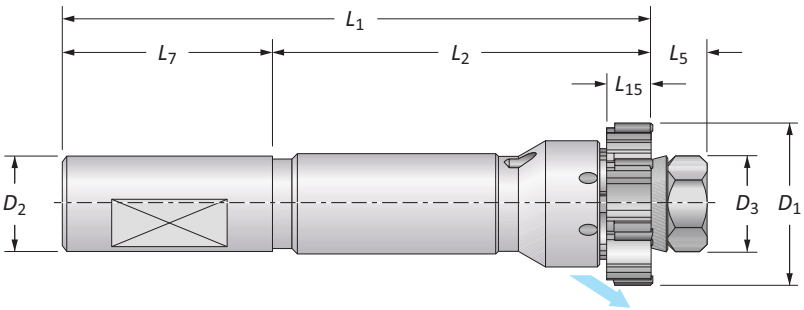

Building Your Complete Tool

You will need both pieces to complete your ring style reamer assembly. There is a guide on the page where the rings are located. You must follow the guide to build the item number for the reamer ring that you need.

However, the complete mandrel item numbers are listed on their respective pages. You do not need to build the mandrel numbers.

1

Select Your Ring

2

Select Your Mandrel

A DRILLING
B BORING
C REAMING
D BURNISHING
E THREADING
X SPECIALS

Cutting Rings

Imperial (inch) | Diameter Range: 0.6929" - 7.8976"

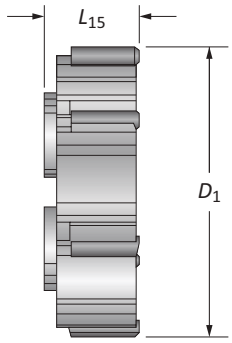

D_1 Range Imperial (inch)	L_{15} Straight Flute	L_{15} Helical Flute	Number of Teeth
1.2835 - 1.7952	0.630	0.630	6
1.7953 - 3.1338	0.728	0.728	6
3.1339 - 3.9606	0.728	0.728	8
3.9607 - 4.3543	0.728	0.728	10
4.3544 - 7.8976	0.728	0.728	12

I 2ANC–ST F – 019686 + 0002 – 0002

- I: Imperial Diameter
- 2ANC–ST: Cermet with TiN Coating
- F: F Lead-in
- 019686: Diameter
- 0002 – 0002: Tolerance

Coating and Substrate Codes

Grade	Uncoated	TiN	TiCN	TiAlN	Alcrona	Hardcut	R Coating	T Coating
Carbide	2000-KT	2TIN-KT	2TIC-KT	2TIA-KT	2TLK-KT	2TLH-KT	2TLR-KT	2TLT-KT
Cermet	2AVC-ST	2ANC-ST	2ACC-ST	2AAC-ST	2ALK-ST	2ALH-ST	2ALR-ST	2ALT-ST

Lead-in Recommendation (Straight Flute)

ISO Material	T	F	N	G	L	A	V	K
P			●	●		◐	○	◐
S	●			◐				
M			◐	●				◐
H			◐	●				
K				◐			●	◐
N				●			◐	

● Best ◐ Better ○ Good

Lead-in Recommendation (Helical Flute)

ISO Material	E	M
P	●	
S	●	◐
M	●	
H	◐	●
K	◐	●
N	●	◐

● Best ◐ Better ○ Good

C: 68 - 87

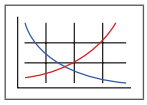

Key on C: 1

C: 40 - 59

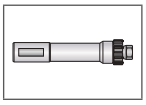

C: 60 - 65

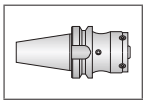

C: 92

Cutting Rings

Metric (mm) | Diameter Range: 17.600 mm - 200.60 mm

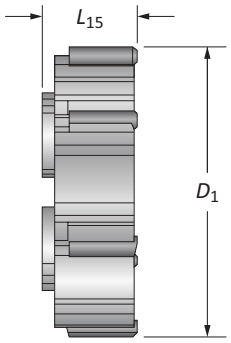

D_1 Range Metric (mm)	L_{15} Straight Flute	L_{15} Helical Flute	Number of Teeth
32.600 - 45.599	16.00	16.00	6
45.600 - 79.599	18.50	18.50	6
79.600 - 100.599	18.50	18.50	8
100.600 - 110.599	18.50	18.50	10
110.600 - 200.600	18.50	18.50	12

2ANC–ST F – 055298 + 003 – 003

- 2ANC–ST: Cermet with TiN Coating
- F: F Lead-in
- 055298: Diameter
- 003 – 003: Tolerance

Coating and Substrate Codes

Grade	Uncoated	TiN	TiCN	TiAlN	Alcrona	Hardcut	R Coating	T Coating
Carbide	2000-KT	2TIN-KT	2TIC-KT	2TIA-KT	2TLK-KT	2TLH-KT	2TLR-KT	2TLT-KT
Cermet	2AVC-ST	2ANC-ST	2ACC-ST	2AAC-ST	2ALK-ST	2ALH-ST	2ALR-ST	2ALT-ST

Lead-in Recommendation (Straight Flute)

ISO Material	T	F	N	G	L	A	V	K
P			●	●		◐	○	◐
S	●			◐				
M			◐	●				◐
H			◐	●				
K				◐			●	◐
N				●			◐	

● Best ◐ Better ○ Good

Lead-in Recommendation (Helical Flute)

ISO Material	E	M
P	●	
S	●	◐
M	●	
H	◐	●
K	◐	●
N	●	◐

● Best ◐ Better ○ Good

C: 68 - 87

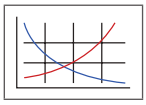

Key on C:1

C: 40 - 59

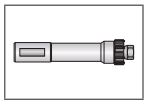

C: 60 - 65

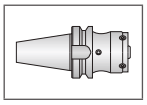

C: 92

A DRILLING
B BORING
C REAMING
D BURNISHING
E THREADING
X SPECIALS

Ring Style Mandrels

4550 Series | Short Length | Diameter Range: 0.6929" - 3.9606" (17.600 mm - 100.599 mm)

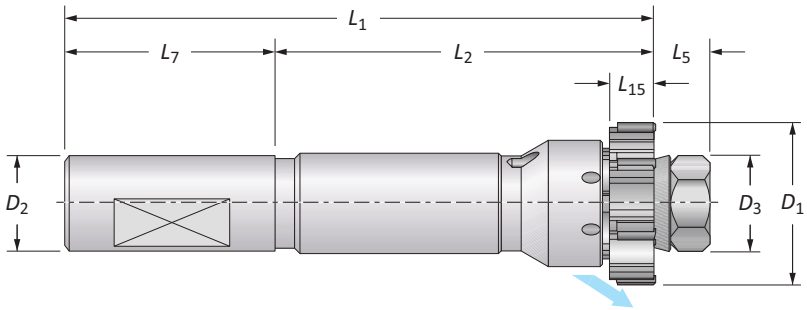

Series	4550	Shank Type	Cylindrical	Application	Through Holes	Coolant	Radial

	D_1 Range	Mandrel D_3	Mandrel L_5	Mandrel L_{15}	Mandrel L_2	Mandrel L_1	Shank L_7	Shank D_2	Teeth	Part No. (Complete Mandrel^) With Flat	Part No. (Complete Mandrel^) Without Flat
	0.6929 - 0.8504	0.472	0.433	0.433	3.189	5.591	1.969	0.750	6	**94550-MC-010***	**94550A-MC-010***
	0.8505 - 1.0078	0.472	0.433	0.472	3.189	5.591	1.969	0.750	6	**94550-MC-020***	**94550A-MC-020***
	1.0079 - 1.2834	0.614	0.433	0.551	4.016	6.417	1.969	0.750	6	**94550-MC-030***	**94550A-MC-030***
	1.2835 - 1.5984	0.866	0.551	0.630	4.016	6.772	2.205	1.000	6	**94550-MC-040**	**94550A-MC-040**
	1.5985 - 1.7952	1.000	0.591	0.630	4.016	6.811	2.205	1.000	6	**94550-MC-050**	**94550A-MC-050**
i	1.7953 - 1.9527	1.181	0.807	0.728	4.134	7.303	2.362	1.250	6	**94550-MC-060**	**94550A-MC-060**
	1.9528 - 2.3858	1.181	0.807	0.728	4.134	7.303	2.362	1.250	6	**94550-MC-070**	**94550A-MC-070**
	2.3859 - 2.7795	1.575	0.965	0.728	4.134	7.461	2.362	1.250	6	**94550-MC-080**	**94550A-MC-080**
	2.7796 - 3.1338	1.575	0.965	0.728	4.134	7.461	2.362	1.250	6	**94550-MC-090**	**94550A-MC-090**
	3.1339 - 3.5669	2.205	1.122	0.728	4.134	8.012	2.756	1.500	8	**94550-MC-100**	**94550A-MC-100**
	3.5670 - 3.9606	2.205	1.122	0.728	4.134	8.012	2.756	1.500	8	**94550-MC-110**	**94550A-MC-110**
	17.600 - 21.599	12	11	11	81	142	50	20	6	**4550-MC-010***	**4550A-MC-010***
	21.600 - 25.599	12	11	12	81	142	50	20	6	**4550-MC-020***	**4550A-MC-020***
	25.600 - 32.599	15.6	11	14	102	163	50	20	6	**4550-MC-030***	**4550A-MC-030***
	32.600 - 40.599	22	14	16	102	172	56	25	6	**4550-MC-040**	**4550A-MC-040**
	40.600 - 45.599	25.4	15	16	102	173	56	25	6	**4550-MC-050**	**4550A-MC-050**
m	45.600 - 49.599	30	20.5	18.5	105	185.5	60	32	6	**4550-MC-060**	**4550A-MC-060**
	49.600 - 60.599	30	20.5	18.5	105	185.5	60	32	6	**4550-MC-070**	**4550A-MC-070**
	60.600 - 70.599	40	24.5	18.5	105	189.5	60	32	6	**4550-MC-080**	**4550A-MC-080**
	70.600 - 79.599	40	24.5	18.5	105	189.5	60	32	6	**4550-MC-090**	**4550A-MC-090**
	79.600 - 90.599	56	28.5	18.5	105	203.5	70	40	8	**4550-MC-100**	**4550A-MC-100**
	90.600 - 100.599	56	28.5	18.5	105	203.5	70	40	8	**4550-MC-110**	**4550A-MC-110**

^Complete mandrel does not include cutting ring.
*0.6929" - 1.2834" (17.600 mm - 32.599 mm) diameter cutting rings are available as specials by contacting Application Engineering.

C: 68 - 87
Key on C: 1

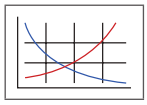

C: 38 - 39

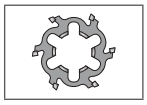

C: 60 - 65

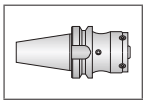

C: 92

i = Imperial (in)
m = Metric (mm)

Ring Style Mandrels

4550 Series | Short Length | Spare Parts

	Part No. (Complete Mandrel^)		Spare Parts 1		2	3	
	With Flat	Without Flat	Drive Pins	Number of Drive Pins	Conical Ring	Nut	Wrench Size (mm)
	94550-MC-010	94550A-MC-010	2000-CO-010	3	2010-AC-010	2000-DA-010	10
	94550-MC-020	94550A-MC-020	2000-CO-020	3	2010-AC-010	2000-DA-010	10
	94550-MC-030	94550A-MC-030	2000-CO-030	3	2010-AC-020	2000-DA-020	13
	94550-MC-040	94550A-MC-040	2000-CO-040	2	2010-AC-030	2000-DA-060	19
	94550-MC-050	94550A-MC-050	2000-CO-060	2	2010-AC-040	2000-DA-090	22
i	94550-MC-060	94550A-MC-060	2000-CO-060	2	2010-AC-050	2000-GH-880	30 ◆
	94550-MC-070	94550A-MC-070	2000-CO-070	2	2010-AC-050	2000-GH-880	30 ◆
	94550-MC-080	94550A-MC-080	2000-CO-080	2	2010-AC-060	2000-GH-900	40 ◆
	94550-MC-090	94550A-MC-090	2000-CO-090	2	2010-AC-060	2000-GH-900	40 ◆
	94550-MC-100	94550A-MC-100	2000-CO-090	2	2010-AC-070	2000-GH-920	56 ◆
	94550-MC-110	94550A-MC-110	2000-CO-090	2	2010-AC-070	2000-GH-920	56 ◆
	4550-MC-010	4550A-MC-010	2000-CO-010	3	2010-AC-010	2000-DA-010	10
	4550-MC-020	4550A-MC-020	2000-CO-020	3	2010-AC-010	2000-DA-010	10
	4550-MC-030	4550A-MC-030	2000-CO-030	3	2010-AC-020	2000-DA-020	13
	4550-MC-040	4550A-MC-040	2000-CO-040	2	2010-AC-030	2000-DA-060	19
	4550-MC-050	4550A-MC-050	2000-CO-060	2	2010-AC-040	2000-DA-090	22
m	4550-MC-060	4550A-MC-060	2000-CO-060	2	2010-AC-050	2000-GH-880	30 ◆
	4550-MC-070	4550A-MC-070	2000-CO-070	2	2010-AC-050	2000-GH-880	30 ◆
	4550-MC-080	4550A-MC-080	2000-CO-080	2	2010-AC-060	2000-GH-900	40 ◆
	4550-MC-090	4550A-MC-090	2000-CO-090	2	2010-AC-060	2000-GH-900	40 ◆
	4550-MC-100	4550A-MC-100	2000-CO-090	2	2010-AC-070	2000-GH-920	56 ◆
	4550-MC-110	4550A-MC-110	2000-CO-090	2	2010-AC-070	2000-GH-920	56 ◆

^Complete mandrel does not include cutting ring.
◆ Spanner wrench.

C: 68 - 87 C: 38 - 39 C: 60 - 65 C: 92

Key on C: 1

i = Imperial (in)
m = Metric (mm)

A DRILLING
B BORING
C REAMING
D BURNISHING
E THREADING
X SPECIALS

Ring Style Mandrels

4555 Series | Short Length | Diameter Range: 0.6929" - 3.9606" (17.600 mm - 100.599 mm)

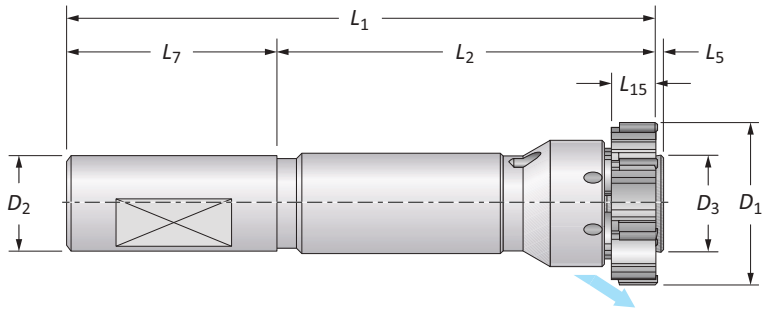

Series	4555	Shank Type	Cylindrical	Application	Blind Holes	Coolant	Radial

	Mandrel					Shank			Part No. (Complete Mandrel^)	
D_1 Range	D_3	L_5	L_{15}	L_2	L_1	L_7	D_2	Teeth	With Flat	Without Flat
0.6929 - 0.8504	0.441	0.039	0.433	3.189	5.197	1.969	0.750	6	**94555-MC-010***	**94555A-MC-010***
0.8505 - 1.0078	0.441	0.039	0.472	3.189	5.197	1.969	0.750	6	**94555-MC-020***	**94555A-MC-020***
1.0079 - 1.1653	0.594	0.039	0.551	4.016	6.024	1.969	0.750	6	**94555-MC-030***	**94555A-MC-030***
1.1654 - 1.2834	0.594	0.039	0.551	4.016	6.024	1.969	0.750	6	**94555-MC-035***	**94555A-MC-035***
1.2835 - 1.4409	0.799	0.039	0.630	4.016	6.260	2.205	1.000	6	**94555-MC-040**	**94555A-MC-040**
1.4410 - 1.5984	0.799	0.039	0.630	4.016	6.260	2.205	1.000	6	**94555-MC-045**	**94555A-MC-045**
1.5985 - 1.7952	0.949	0.039	0.630	4.016	6.260	2.205	1.000	6	**94555-MC-050**	**94555A-MC-050**
i 1.7953 - 1.9527	1.098	0.059	0.728	4.134	6.555	2.362	1.250	6	**94555-MC-060**	**94555A-MC-060**
1.9528 - 2.1889	1.098	0.059	0.728	4.134	6.555	2.362	1.250	6	**94555-MC-070**	**94555A-MC-070**
2.1890 - 2.3858	1.098	0.059	0.728	4.134	6.555	2.362	1.250	6	**94555-MC-075**	**94555A-MC-075**
2.3859 - 2.5826	1.461	0.059	0.728	4.134	6.555	2.362	1.250	6	**94555-MC-080**	**94555A-MC-080**
2.5827 - 2.7795	1.461	0.059	0.728	4.134	6.555	2.362	1.250	6	**94555-MC-085**	**94555A-MC-085**
2.7796 - 3.1338	1.461	0.059	0.728	4.134	6.555	2.362	1.250	6	**94555-MC-090**	**94555A-MC-090**
3.1339 - 3.5669	2.091	0.059	0.728	4.134	6.949	2.756	1.500	8	**94555-MC-100**	**94555A-MC-100**
3.5670 - 3.9606	2.091	0.059	0.728	4.134	6.949	2.756	1.500	8	**94555-MC-110**	**94555A-MC-110**
17.600 - 21.599	11.2	1	11	81	132	50	20	6	**4555-MC-010***	**4555A-MC-010***
21.600 - 25.599	11.2	1	12	81	132	50	20	6	**4555-MC-020***	**4555A-MC-020***
25.600 - 29.599	15.1	1	14	102	153	50	20	6	**4555-MC-030***	**4555A-MC-030***
29.600 - 32.599	15.1	1	14	102	153	50	20	6	**4555-MC-035***	**4555A-MC-035***
32.600 - 36.599	20.3	1	16	102	159	56	25	6	**4555-MC-040**	**4555A-MC-040**
36.600 - 40.599	20.3	1	16	102	159	56	25	6	**4555-MC-045**	**4555A-MC-045**
40.600 - 45.599	24.1	1	16	102	159	56	25	6	**4555-MC-050**	**4555A-MC-050**
m 45.600 - 49.599	27.9	1.5	18.5	105	166.5	60	32	6	**4555-MC-060**	**4555A-MC-060**
49.600 - 55.599	27.9	1.5	18.5	105	166.5	60	32	6	**4555-MC-070**	**4555A-MC-070**
55.600 - 60.599	27.9	1.5	18.5	105	166.5	60	32	6	**4555-MC-075**	**4555A-MC-075**
60.600 - 65.599	37.1	1.5	18.5	105	166.5	60	32	6	**4555-MC-080**	**4555A-MC-080**
65.600 - 70.599	37.1	1.5	18.5	105	166.5	60	32	6	**4555-MC-085**	**4555A-MC-085**
70.600 - 79.599	37.1	1.5	18.5	105	166.5	60	32	6	**4555-MC-090**	**4555A-MC-090**
79.600 - 90.599	53.1	1.5	18.5	105	176.5	70	40	8	**4555-MC-100**	**4555A-MC-100**
90.600 - 100.599	53.1	1.5	18.5	105	176.5	70	40	8	**4555-MC-110**	**4555A-MC-110**

^Complete mandrel does not include cutting ring.
*0.6929" - 1.2834" (17.600 mm - 32.599 mm) diameter cutting rings are available as specials by contacting Application Engineering.

C: 68 - 87
Key on C: 1
C: 38 - 39
C: 60 - 65
C: 92

i = Imperial (in)
m = Metric (mm)

Ring Style Mandrels

4555 Series | Short Length | Spare Parts

	Part No. (Complete Mandrel^)		Spare Parts 1		2			3	
	With Flat	Without Flat	Drive Pins	Number of Drive Pins	Conical Ring	Conical Ring (2nd Expansion)	Conical Ring (3rd Expansion)	Adjusting Key	Wrench Size (mm)
	94555-MC-010	**94555A-MC-010**	2000-CO-010	3	4001-AC-115	4001-AC-215	–	4001-CH-015	10
	94555-MC-020	**94555A-MC-020**	2000-CO-020	3	4001-AC-115	4001-AC-215	–	4001-CH-015	10
	94555-MC-030	**94555A-MC-030**	2000-CO-030	3	4001-AC-125	4001-AC-225	4001-AC-325	4001-CH-025	13
	94555-MC-035	**94555A-MC-035**	2000-CO-040	2	4001-AC-125	4001-AC-225	4001-AC-325	4001-CH-025	13
	94555-MC-040	**94555A-MC-040**	2000-CO-040	2	4001-AC-135	4001-AC-235	4001-AC-335	4001-CH-035	18
	94555-MC-045	**94555A-MC-045**	2000-CO-050	2	4001-AC-135	4001-AC-235	4001-AC-335	4001-CH-035	18
	94555-MC-050	**94555A-MC-050**	2000-CO-060	2	4001-AC-145	4001-AC-245	4001-AC-345	4001-CH-045	22
i	**94555-MC-060**	**94555A-MC-060**	2000-CO-060	2	4001-AC-155	4001-AC-255	4001-AC-355	4001-CH-055	26
	94555-MC-070	**94555A-MC-070**	2000-CO-070	2	4001-AC-155	4001-AC-255	4001-AC-355	4001-CH-055	26
	94555-MC-075	**94555A-MC-075**	2000-CO-080	2	4001-AC-155	4001-AC-255	4001-AC-355	4001-CH-055	26
	94555-MC-080	**94555A-MC-080**	2000-CO-080	2	4001-AC-165	4001-AC-265	4001-AC-365	4001-CH-065	34
	94555-MC-085	**94555A-MC-085**	2000-CO-090	2	4001-AC-165	4001-AC-265	4001-AC-365	4001-CH-065	34
	94555-MC-090	**94555A-MC-090**	2000-CO-090	2	4001-AC-165	4001-AC-265	4001-AC-365	4001-CH-065	34
	94555-MC-100	**94555A-MC-100**	2000-CO-090	2	4001-AC-185	4001-AC-285	4001-AC-385	4001-CH-085	46
	94555-MC-110	**94555A-MC-110**	2000-CO-090	2	4001-AC-185	4001-AC-285	4001-AC-385	4001-CH-085	46
	4555-MC-010	**4555A-MC-010**	2000-CO-010	3	4001-AC-115	4001-AC-215	–	4001-CH-015	10
	4555-MC-020	**4555A-MC-020**	2000-CO-020	3	4001-AC-115	4001-AC-215	–	4001-CH-015	10
	4555-MC-030	**4555A-MC-030**	2000-CO-030	3	4001-AC-125	4001-AC-225	4001-AC-325	4001-CH-025	13
	4555-MC-035	**4555A-MC-035**	2000-CO-040	2	4001-AC-125	4001-AC-225	4001-AC-325	4001-CH-025	13
	4555-MC-040	**4555A-MC-040**	2000-CO-040	2	4001-AC-135	4001-AC-235	4001-AC-335	4001-CH-035	18
	4555-MC-045	**4555A-MC-045**	2000-CO-050	2	4001-AC-135	4001-AC-235	4001-AC-335	4001-CH-035	18
	4555-MC-050	**4555A-MC-050**	2000-CO-060	2	4001-AC-145	4001-AC-245	4001-AC-345	4001-CH-045	22
m	**4555-MC-060**	**4555A-MC-060**	2000-CO-060	2	4001-AC-155	4001-AC-255	4001-AC-355	4001-CH-055	26
	4555-MC-070	**4555A-MC-070**	2000-CO-070	2	4001-AC-155	4001-AC-255	4001-AC-355	4001-CH-055	26
	4555-MC-075	**4555A-MC-075**	2000-CO-080	2	4001-AC-155	4001-AC-255	4001-AC-355	4001-CH-055	26
	4555-MC-080	**4555A-MC-080**	2000-CO-080	2	4001-AC-165	4001-AC-265	4001-AC-365	4001-CH-065	34
	4555-MC-085	**4555A-MC-085**	2000-CO-090	2	4001-AC-165	4001-AC-265	4001-AC-365	4001-CH-065	34
	4555-MC-090	**4555A-MC-090**	2000-CO-090	2	4001-AC-165	4001-AC-265	4001-AC-365	4001-CH-065	34
	4555-MC-100	**4555A-MC-100**	2000-CO-090	2	4001-AC-185	4001-AC-285	4001-AC-385	4001-CH-085	46
	4555-MC-110	**4555A-MC-110**	2000-CO-090	2	4001-AC-185	4001-AC-285	4001-AC-385	4001-CH-085	46

^Complete mandrel does not include cutting ring.

C: 68 - 87 C: 38 - 39 C: 60 - 65 C: 92
Key on C: 1

i = Imperial (in)
m = Metric (mm)

A DRILLING
B BORING
C REAMING
D BURNISHING
E THREADING
X SPECIALS

Ring Style Mandrels

4500 Series | Long Length | Diameter Range: 0.6929" - 3.9606" (17.600 mm - 100.599 mm)

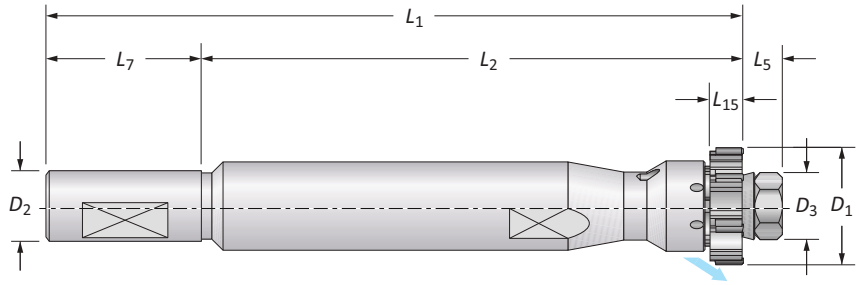

Series	4500	Shank Type	Cylindrical	Application	Through Holes	Coolant	Radial

	D_1 Range	Mandrel D_3	Mandrel L_5	Mandrel L_{15}	Mandrel L_2	Mandrel L_1	Shank L_7	Shank D_2	Teeth	Part No. (Complete Mandrel^) With Flat	Part No. (Complete Mandrel^) Without Flat
	0.6929 - 0.8504	0.472	0.433	0.433	4.764	7.165	1.969	0.750	6	**94500-MC-010***	**94500A-MC-010***
	0.8505 - 1.0078	0.472	0.433	0.472	4.764	7.165	1.969	0.750	6	**94500-MC-020***	**94500A-MC-020***
	1.0079 - 1.2834	0.614	0.433	0.551	6.024	8.425	1.969	0.750	6	**94500-MC-030***	**94500A-MC-030***
	1.2835 - 1.5984	0.866	0.551	0.630	7.047	9.803	2.205	1.000	6	**94500-MC-040**	**94500A-MC-040**
	1.5985 - 1.7952	0.866	0.551	0.630	7.047	9.803	2.205	1.000	6	**94500-MC-050**	**94500A-MC-050**
i	1.7953 - 1.9527	1.000	0.591	0.630	7.913	10.709	2.205	1.000	6	**94500-MC-060**	**94500A-MC-060**
	1.9528 - 2.3858	1.181	0.807	0.728	8.425	11.594	2.362	1.250	6	**94500-MC-070**	**94500A-MC-070**
	2.3859 - 2.7795	1.575	0.965	0.728	9.331	12.657	2.362	1.250	6	**94500-MC-080**	**94500A-MC-080**
	2.7796 - 3.1338	1.575	0.965	0.728	9.331	12.657	2.362	1.250	6	**94500-MC-090**	**94500A-MC-090**
	3.1339 - 3.5669	2.205	1.122	0.728	9.646	13.524	2.756	1.500	6	**94500-MC-100**	**94500A-MC-100**
	3.5670 - 3.9606	2.205	1.122	0.728	9.646	13.524	2.756	1.500	8	**94500-MC-110**	**94500A-MC-110**
	17.600 - 21.599	12	11	11	121	182	50	20	6	**4500-MC-010***	**4500A-MC-010***
	21.600 - 25.599	12	11	12	121	182	50	20	6	**4500-MC-020***	**4500A-MC-020***
	25.600 - 32.599	15.6	11	14	153	214	50	20	6	**4500-MC-030***	**4500A-MC-030***
	32.600 - 40.599	22	14	16	179	249	56	25	6	**4500-MC-040**	**4500A-MC-040**
	40.600 - 45.599	25.4	15	16	201	272	56	25	6	**4500-MC-050**	**4500A-MC-050**
m	45.600 - 49.599	30	20.5	18.5	214	294.5	60	32	6	**4500-MC-060**	**4500A-MC-060**
	49.600 - 60.599	30	20.5	18.5	214	294.5	60	32	6	**4500-MC-070**	**4500A-MC-070**
	60.600 - 70.599	40	24.5	18.5	237	321.5	60	32	6	**4500-MC-080**	**4500A-MC-080**
	70.600 - 79.599	40	24.5	18.5	237	321.5	60	32	6	**4500-MC-090**	**4500A-MC-090**
	79.600 - 90.599	56	28.5	18.5	245	343.5	70	40	6	**4500-MC-100**	**4500A-MC-100**
	90.600 - 100.599	56	28.5	18.5	245	343.5	70	40	8	**4500-MC-110**	**4500A-MC-110**

^Complete mandrel does not include cutting ring.
*0.6929" - 1.2834" (17.600 mm - 32.599 mm) diameter cutting rings are available as specials by contacting Application Engineering.

C: 68 - 87
Key on C: 1
C: 38 - 39
C: 60 - 65
C: 92

i = Imperial (in)
m = Metric (mm)

Ring Style Mandrels

4500 Series | Long Length | Spare Parts

	Part No. (Complete Mandrel^)		Spare Parts 1		2	3	
	With Flat	Without Flat	Drive Pins	Number of Drive Pins	Conical Ring	Nut	Wrench Size (mm)
	94500-MC-010	94500A-MC-010	2000-CO-010	3	2010-AC-010	2000-DA-010	10
	94500-MC-020	94500A-MC-020	2000-CO-020	3	2010-AC-010	2000-DA-010	10
	94500-MC-030	94500A-MC-030	2000-CO-030	3	2010-AC-020	2000-DA-020	13
	94500-MC-040	94500A-MC-040	2000-CO-040	2	2010-AC-030	2000-DA-060	19
	94500-MC-050	94500A-MC-050	2000-CO-060	2	2010-AC-040	2000-DA-090	22
i	94500-MC-060	94500A-MC-060	2000-CO-060	2	2010-AC-050	2000-GH-880	30 ◆
	94500-MC-070	94500A-MC-070	2000-CO-070	2	2010-AC-050	2000-GH-880	30 ◆
	94500-MC-080	94500A-MC-080	2000-CO-080	2	2010-AC-060	2000-GH-900	40 ◆
	94500-MC-090	94500A-MC-090	2000-CO-090	2	2010-AC-060	2000-GH-900	40 ◆
	94500-MC-100	94500A-MC-100	2000-CO-090	2	2010-AC-070	2000-GH-920	56 ◆
	94500-MC-110	94500A-MC-110	2000-CO-090	2	2010-AC-070	2000-GH-920	56 ◆
	4500-MC-010	4500A-MC-010	2000-CO-010	3	2010-AC-010	2000-DA-010	10
	4500-MC-020	4500A-MC-020	2000-CO-020	3	2010-AC-010	2000-DA-010	10
	4500-MC-030	4500A-MC-030	2000-CO-030	3	2010-AC-020	2000-DA-020	13
	4500-MC-040	4500A-MC-040	2000-CO-040	2	2010-AC-030	2000-DA-060	19
	4500-MC-050	4500A-MC-050	2000-CO-060	2	2010-AC-040	2000-DA-090	22
m	4500-MC-060	4500A-MC-060	2000-CO-060	2	2010-AC-050	2000-GH-880	30 ◆
	4500-MC-070	4500A-MC-070	2000-CO-070	2	2010-AC-050	2000-GH-880	30 ◆
	4500-MC-080	4500A-MC-080	2000-CO-080	2	2010-AC-060	2000-GH-900	40 ◆
	4500-MC-090	4500A-MC-090	2000-CO-090	2	2010-AC-060	2000-GH-900	40 ◆
	4500-MC-100	4500A-MC-100	2000-CO-090	2	2010-AC-070	2000-GH-920	56 ◆
	4500-MC-110	4500A-MC-110	2000-CO-090	2	2010-AC-070	2000-GH-920	56 ◆

^Complete mandrel does not include cutting ring.
◆ Spanner wrench.

C: 68 - 87
Key on C: 1
C: 38 - 39
C: 60 - 65
C: 92

i = Imperial (in)
m = Metric (mm)

A DRILLING
B BORING
C REAMING
D BURNISHING
E THREADING
X SPECIALS

Ring Style Mandrels

4505 Series | Long Length | Diameter Range: 0.6929" - 3.9606" (17.600 mm - 100.599 mm)

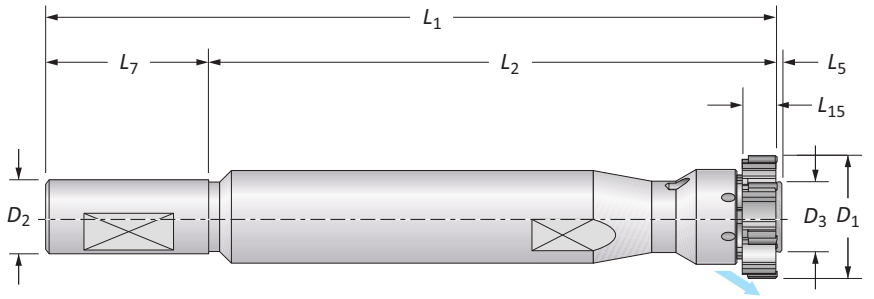

Series	4505	Shank Type	Cylindrical	Application	Blind Holes	Coolant	Radial

		Mandrel					Shank			Part No. (Complete Mandrel^)	
	D_1 Range	D_3	L_5	L_{15}	L_2	L_1	L_7	D_2	Teeth	With Flat	Without Flat
	0.6929 - 0.8504	0.441	0.039	0.433	4.764	6.772	1.969	0.750	6	**94505-MC-010***	**94505A-MC-010***
	0.8505 - 1.0078	0.441	0.039	0.472	4.764	6.772	1.969	0.750	6	**94505-MC-020***	**94505A-MC-020***
	1.0079 - 1.1653	0.594	0.039	0.551	6.024	8.031	1.969	0.750	6	**94505-MC-030***	**94505A-MC-030***
	1.1654 - 1.2834	0.594	0.039	0.551	6.024	8.031	1.969	0.750	6	**94505-MC-035***	**94505A-MC-035***
	1.2835 - 1.4409	0.799	0.039	0.630	7.047	9.291	2.205	1.000	6	**94505-MC-040**	**94505A-MC-040**
	1.4410 - 1.5984	0.799	0.039	0.630	7.047	9.291	2.205	1.000	6	**94505-MC-045**	**94505A-MC-045**
	1.5985 - 1.7952	0.949	0.039	0.630	7.913	10.157	2.205	1.000	6	**94505-MC-050**	**94505A-MC-050**
i	1.7953 - 1.9527	1.098	0.059	0.728	8.425	10.846	2.362	1.250	6	**94505-MC-060**	**94505A-MC-060**
	1.9528 - 2.1889	1.098	0.059	0.728	8.425	10.846	2.362	1.250	6	**94505-MC-070**	**94505A-MC-070**
	2.1890 - 2.3858	1.098	0.059	0.728	8.425	10.846	2.362	1.250	6	**94505-MC-075**	**94505A-MC-075**
	2.3859 - 2.5826	1.461	0.059	0.728	9.331	11.752	2.362	1.250	6	**94505-MC-080**	**94505A-MC-080**
	2.5827 - 2.7795	1.461	0.059	0.728	9.331	11.752	2.362	1.250	6	**94505-MC-085**	**94505A-MC-085**
	2.7796 - 3.1338	1.461	0.059	0.728	9.331	11.752	2.362	1.250	6	**94505-MC-090**	**94505A-MC-090**
	3.1339 - 3.5669	2.091	0.059	0.728	9.646	12.461	2.756	1.500	8	**94505-MC-100**	**94505A-MC-100**
	3.5670 - 3.9606	2.091	0.059	0.728	9.646	12.461	2.756	1.500	8	**94505-MC-110**	**94505A-MC-110**
	17.600 - 21.599	11.2	1	11	121	172	50	20	6	**4505-MC-010***	**4505A-MC-010***
	21.600 - 25.599	11.2	1	12	121	172	50	20	6	**4505-MC-020***	**4505A-MC-020***
	25.600 - 29.599	15.1	1	14	153	204	50	20	6	**4505-MC-030***	**4505A-MC-030***
	29.600 - 32.599	15.1	1	14	153	204	50	20	6	**4505-MC-035***	**4505A-MC-035***
	32.600 - 36.599	20.3	1	16	179	236	56	25	6	**4505-MC-040**	**4505A-MC-040**
	36.600 - 40.599	20.3	1	16	179	236	56	25	6	**4505-MC-045**	**4505A-MC-045**
	40.600 - 45.599	24.1	1	16	201	258	56	25	6	**4505-MC-050**	**4505A-MC-050**
m	45.600 - 49.599	27.9	1.5	18.5	214	275.5	60	32	6	**4505-MC-060**	**4505A-MC-060**
	49.600 - 55.599	27.9	1.5	18.5	214	275.5	60	32	6	**4505-MC-070**	**4505A-MC-070**
	55.600 - 60.599	27.9	1.5	18.5	214	275.5	60	32	6	**4505-MC-075**	**4505A-MC-075**
	60.600 - 65.599	37.1	1.5	18.5	237	298.5	60	32	6	**4505-MC-080**	**4505A-MC-080**
	65.600 - 70.599	37.1	1.5	18.5	237	298.5	60	32	6	**4505-MC-085**	**4505A-MC-085**
	70.600 - 79.599	37.1	1.5	18.5	237	298.5	60	32	6	**4505-MC-090**	**4505A-MC-090**
	79.600 - 90.599	53.1	1.5	18.5	245	316.5	70	40	8	**4505-MC-100**	**4505A-MC-100**
	90.600 - 100.599	53.1	1.5	18.5	245	316.5	70	40	8	**4505-MC-110**	**4505A-MC-110**

^Complete mandrel does not include cutting ring.
*0.6929" - 1.2834" (17.600 mm - 32.599 mm) diameter cutting rings are available as specials by contacting Application Engineering.

C: 68 - 87 C: 38 - 39 C: 60 - 65 C: 92

Key on C: 1

i = Imperial (in)
m = Metric (mm)

Ring Style Mandrels

4505 Series | Long Length | Spare Parts

	Part No. (Complete Mandrel^)		Spare Parts 1		2			3	
	With Flat	Without Flat	Drive Pins	Number of Drive Pins	Conical Ring	Conical Ring (2nd Expansion)	Conical Ring (3rd Expansion)	Adjusting Key	Wrench Size (mm)
	94505-MC-010	**94505A-MC-010**	2000-CO-010	3	4001-AC-115	4001-AC-215	–	4001-CH-015	10
	94505-MC-020	**94505A-MC-020**	2000-CO-020	3	4001-AC-115	4001-AC-215	–	4001-CH-015	10
	94505-MC-030	**94505A-MC-030**	2000-CO-030	3	4001-AC-125	4001-AC-225	4001-AC-325	4001-CH-025	13
	94505-MC-035	**94505A-MC-035**	2000-CO-040	2	4001-AC-125	4001-AC-225	4001-AC-325	4001-CH-025	13
	94505-MC-040	**94505A-MC-040**	2000-CO-040	2	4001-AC-135	4001-AC-235	4001-AC-335	4001-CH-035	18
	94505-MC-045	**94505A-MC-045**	2000-CO-050	2	4001-AC-135	4001-AC-235	4001-AC-335	4001-CH-035	18
	94505-MC-050	**94505A-MC-050**	2000-CO-060	2	4001-AC-145	4001-AC-245	4001-AC-345	4001-CH-045	22
i	**94505-MC-060**	**94505A-MC-060**	2000-CO-060	2	4001-AC-155	4001-AC-255	4001-AC-355	4001-CH-055	26
	94505-MC-070	**94505A-MC-070**	2000-CO-070	2	4001-AC-155	4001-AC-255	4001-AC-355	4001-CH-055	26
	94505-MC-075	**94505A-MC-075**	2000-CO-080	2	4001-AC-155	4001-AC-255	4001-AC-355	4001-CH-055	26
	94505-MC-080	**94505A-MC-080**	2000-CO-080	2	4001-AC-165	4001-AC-265	4001-AC-365	4001-CH-065	34
	94505-MC-085	**94505A-MC-085**	2000-CO-090	2	4001-AC-165	4001-AC-265	4001-AC-365	4001-CH-065	34
	94505-MC-090	**94505A-MC-090**	2000-CO-090	2	4001-AC-165	4001-AC-265	4001-AC-365	4001-CH-065	34
	94505-MC-100	**94505A-MC-100**	2000-CO-090	2	4001-AC-185	4001-AC-285	4001-AC-385	4001-CH-085	46
	94505-MC-110	**94505A-MC-110**	2000-CO-090	2	4001-AC-185	4001-AC-285	4001-AC-385	4001-CH-085	46
	4505-MC-010	**4505A-MC-010**	2000-CO-010	3	4001-AC-115	4001-AC-215	–	4001-CH-015	10
	4505-MC-020	**4505A-MC-020**	2000-CO-020	3	4001-AC-115	4001-AC-215	–	4001-CH-015	10
	4505-MC-030	**4505A-MC-030**	2000-CO-030	3	4001-AC-125	4001-AC-225	4001-AC-325	4001-CH-025	13
	4505-MC-035	**4505A-MC-035**	2000-CO-040	2	4001-AC-125	4001-AC-225	4001-AC-325	4001-CH-025	13
	4505-MC-040	**4505A-MC-040**	2000-CO-040	2	4001-AC-135	4001-AC-235	4001-AC-335	4001-CH-035	18
	4505-MC-045	**4505A-MC-045**	2000-CO-050	2	4001-AC-135	4001-AC-235	4001-AC-335	4001-CH-035	18
	4505-MC-050	**4505A-MC-050**	2000-CO-060	2	4001-AC-145	4001-AC-245	4001-AC-345	4001-CH-045	22
m	**4505-MC-060**	**4505A-MC-060**	2000-CO-060	2	4001-AC-155	4001-AC-255	4001-AC-355	4001-CH-055	26
	4505-MC-070	**4505A-MC-070**	2000-CO-070	2	4001-AC-155	4001-AC-255	4001-AC-355	4001-CH-055	26
	4505-MC-075	**4505A-MC-075**	2000-CO-080	2	4001-AC-155	4001-AC-255	4001-AC-355	4001-CH-055	26
	4505-MC-080	**4505A-MC-080**	2000-CO-080	2	4001-AC-165	4001-AC-265	4001-AC-365	4001-CH-065	34
	4505-MC-085	**4505A-MC-085**	2000-CO-090	2	4001-AC-165	4001-AC-265	4001-AC-365	4001-CH-065	34
	4505-MC-090	**4505A-MC-090**	2000-CO-090	2	4001-AC-165	4001-AC-265	4001-AC-365	4001-CH-065	34
	4505-MC-100	**4505A-MC-100**	2000-CO-090	2	4001-AC-185	4001-AC-285	4001-AC-385	4001-CH-085	46
	4505-MC-110	**4505A-MC-110**	2000-CO-090	2	4001-AC-185	4001-AC-285	4001-AC-385	4001-CH-085	46

^Complete mandrel does not include cutting ring.

C: 68 - 87 C: 38 - 39 C: 60 - 65 C: 92

Key on C: 1

i = Imperial (in)
m = Metric (mm)

A DRILLING
B BORING
C REAMING
D BURNISHING
E THREADING
X SPECIALS

Ring Style Mandrels

4330 Series | Short Length | Diameter Range: 0.6929" - 3.9606" (17.600 mm - 100.599 mm)

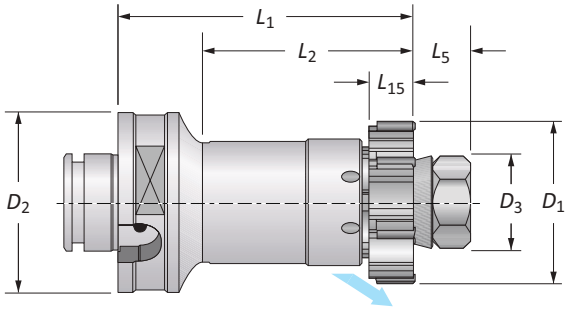

Series	4330	Shank Type	Modular	Application	Through Holes	Coolant	Radial

	D_1 Range		Mandrel					Shank		
	Imperial (inch)	Metric (mm)	D_3	L_5	L_{15}	L_2	L_1	D_2	Teeth	Part No. (Complete Mandrel^)
	0.6929 - 0.8504	17.600 - 21.599	12	11	11	55	75	50	6	**4330-MC-010***
	0.8505 - 1.0078	21.600 - 25.599	12	11	12	55	75	50	6	**4330-MC-020***
	1.0079 - 1.2834	25.600 - 32.599	15.6	11	14	60	80	50	6	**4330-MC-030***
	1.2835 - 1.5984	32.600 - 40.599	22	14	16	60	80	50	6	**4330-MC-040**
	1.5985 - 1.7952	40.600 - 45.599	25.4	15	16	60	80	50	6	**4330-MC-050**
ⓜ	1.7953 - 1.9527	45.600 - 49.599	30	20.5	18.5	60	80	50	6	**4330-MC-060**
	1.9528 - 2.3858	49.600 - 60.599	30	20.5	18.5	60	80	50	6	**4330-MC-070**
	2.3859 - 2.7795	60.600 - 70.599	40	24.5	18.5	65	90	63	6	**4330-MC-080**
	2.7796 - 3.1338	70.600 - 79.599	40	24.5	18.5	65	90	63	6	**4330-MC-090**
	3.1339 - 3.5669	79.600 - 90.599	56	28.5	18.5	65	90	63	8	**4330-MC-100**
	3.5670 - 3.9606	90.600 - 100.599	56	28.5	18.5	65	90	63	8	**4330-MC-110**

^Complete mandrel does not include cutting ring.
*0.6929" - 1.2834" (17.600 mm - 32.599 mm) diameter cutting rings are available as specials by contacting Application Engineering.

C: 68 - 87
Key on C: 1
C: 38 - 39
C: 60 - 65
C: 92

ⓘ = Imperial (in)
ⓜ = Metric (mm)

Ring Style Mandrels

4330 Series | Short Length | Spare Parts

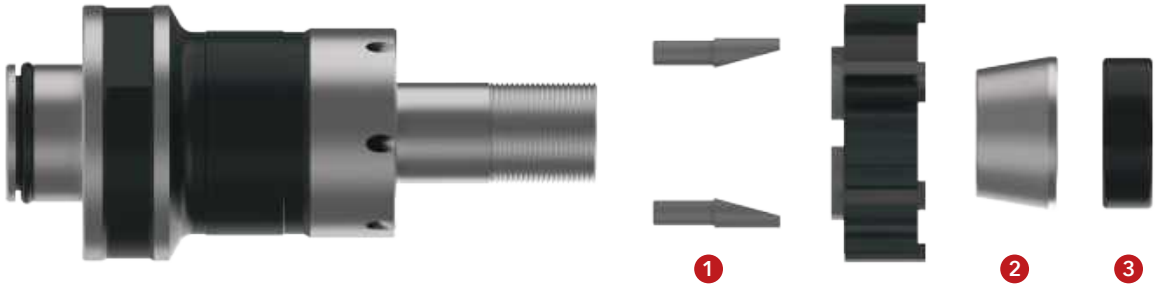

	Part No. (Complete Mandrel^)	Spare Parts 1 Drive Pins	Number of Drive Pins	2 Conical Ring	3 Nut	Wrench Size (mm)
	4330-MC-010	2000-CO-010	3	2010-AC-010	2000-DA-010	10
	4330-MC-020	2000-CO-020	3	2010-AC-010	2000-DA-010	10
	4330-MC-030	2000-CO-030	3	2010-AC-020	2000-DA-020	13
	4330-MC-040	2000-CO-040	2	2010-AC-030	2000-DA-060	19
	4330-MC-050	2000-CO-060	2	2010-AC-040	2000-DA-090	22
m	**4330-MC-060**	2000-CO-060	2	2010-AC-050	2000-GH-880	30 ◆
	4330-MC-070	2000-CO-070	2	2010-AC-050	2000-GH-880	30 ◆
	4330-MC-080	2000-CO-080	2	2010-AC-060	2000-GH-900	40 ◆
	4330-MC-090	2000-CO-090	2	2010-AC-060	2000-GH-900	40 ◆
	4330-MC-100	2000-CO-090	2	2010-AC-070	2000-GH-920	56 ◆
	4330-MC-110	2000-CO-090	2	2010-AC-070	2000-GH-920	56 ◆

^Complete mandrel does not include cutting ring.
◆ Spanner wrench.

C: 68 - 87
Key on C: 1
C: 38 - 39
C: 60 - 65
C: 92

i = Imperial (in)
m = Metric (mm)

A DRILLING
B BORING
C REAMING
D BURNISHING
E THREADING
X SPECIALS

Ring Style Mandrels

4335 Series | Short Length | Diameter Range: 0.6929" - 3.9606" (17.600 mm - 100.599 mm)

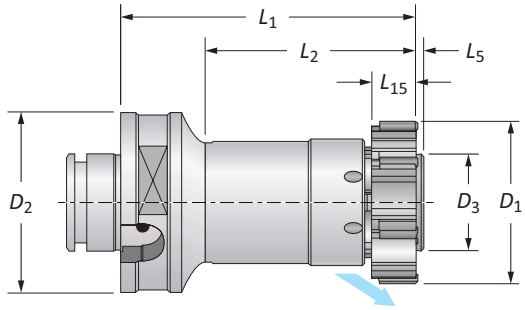

Series	4335	Shank Type	Modular	Application	Blind Holes	Coolant	Radial

	D_1 Range		Mandrel					Shank		
	Imperial (inch)	Metric (mm)	D_3	L_5	L_{15}	L_2	L_1	D_2	Teeth	Part No. (Complete Mandrel^)
	0.6929 - 0.8504	17.600 - 21.599	11.2	1	11	55	75	50	6	**4335-MC-010***
	0.8505 - 1.0078	21.600 - 25.599	11.2	1	12	55	75	50	6	**4335-MC-020***
	1.0079 - 1.1653	25.600 - 29.599	15.1	1	14	60	80	50	6	**4335-MC-030***
	1.1654 - 1.2834	29.600 - 32.599	15.1	1	14	60	80	50	6	**4335-MC-035***
	1.2835 - 1.4409	32.600 - 36.599	20.3	1	16	60	80	50	6	**4335-MC-040**
	1.4410 - 1.5984	36.600 - 40.599	20.3	1	16	60	80	50	6	**4335-MC-045**
	1.5985 - 1.7952	40.600 - 45.599	24.1	1	16	60	80	50	6	**4335-MC-050**
m	1.7953 - 1.9527	45.600 - 49.599	27.9	1.5	18.5	60	80	50	6	**4335-MC-060**
	1.9528 - 2.1889	49.600 - 55.599	27.9	1.5	18.5	60	80	50	6	**4335-MC-070**
	2.1890 - 2.3858	55.600 - 60.599	27.9	1.5	18.5	60	80	50	6	**4335-MC-075**
	2.3859 - 2.5826	60.600 - 65.599	37.1	1.5	18.5	65	90	63	6	**4335-MC-080**
	2.5827 - 2.7795	65.600 - 70.599	37.1	1.5	18.5	65	90	63	6	**4335-MC-085**
	2.7796 - 3.1338	70.600 - 79.599	37.1	1.5	18.5	65	90	63	6	**4335-MC-090**
	3.1339 - 3.5669	79.600 - 90.599	53.1	1.5	18.5	65	90	63	8	**4335-MC-100**
	3.5670 - 3.9606	90.600 - 100.599	53.1	1.5	18.5	65	90	63	8	**4335-MC-110**

^Complete mandrel does not include cutting ring.
*0.6929" - 1.2834" (17.600 mm - 32.599 mm) diameter cutting rings are available as specials by contacting Application Engineering.

C: 68 - 87
Key on C: 1
C: 38 - 39
C: 60 - 65
C: 92

i = Imperial (in)
m = Metric (mm)

Ring Style Mandrels

4335 Series | Short Length | Spare Parts

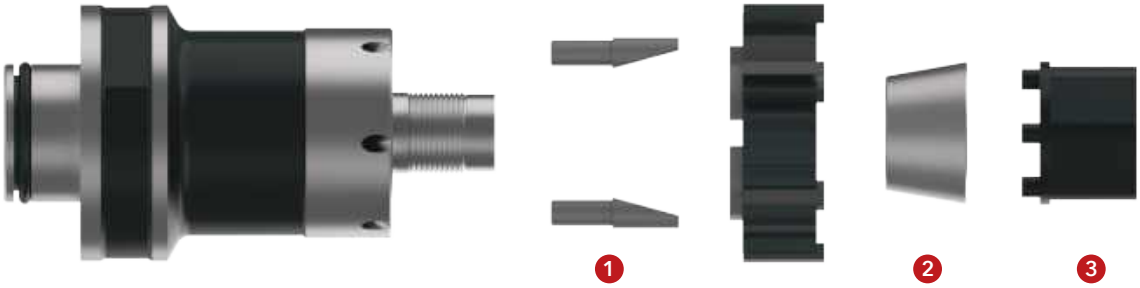

	Part No. (Complete Mandrel^)	Spare Parts 1: Drive Pins	1: Number of Drive Pins	2: Conical Ring	2: Conical Ring (2nd Expansion)	2: Conical Ring (3rd Expansion)	3: Adjusting Key	3: Wrench Size (mm)
	4335-MC-010	2000-CO-010	3	4001-AC-115	4001-AC-215	–	4001-CH-015	10
	4335-MC-020	2000-CO-020	3	4001-AC-115	4001-AC-215	–	4001-CH-015	10
	4335-MC-030	2000-CO-030	3	4001-AC-125	4001-AC-225	4001-AC-325	4001-CH-025	13
	4335-MC-035	2000-CO-040	2	4001-AC-125	4001-AC-225	4001-AC-325	4001-CH-025	13
	4335-MC-040	2000-CO-040	2	4001-AC-135	4001-AC-235	4001-AC-335	4001-CH-035	18
	4335-MC-045	2000-CO-050	2	4001-AC-135	4001-AC-235	4001-AC-335	4001-CH-035	18
	4335-MC-050	2000-CO-060	2	4001-AC-145	4001-AC-245	4001-AC-345	4001-CH-045	22
ⓜ	**4335-MC-060**	2000-CO-060	2	4001-AC-155	4001-AC-255	4001-AC-355	4001-CH-055	26
	4335-MC-070	2000-CO-070	2	4001-AC-155	4001-AC-255	4001-AC-355	4001-CH-055	26
	4335-MC-075	2000-CO-080	2	4001-AC-155	4001-AC-255	4001-AC-355	4001-CH-055	26
	4335-MC-080	2000-CO-080	2	4001-AC-165	4001-AC-265	4001-AC-365	4001-CH-065	34
	4335-MC-085	2000-CO-090	2	4001-AC-165	4001-AC-265	4001-AC-365	4001-CH-065	34
	4335-MC-090	2000-CO-090	2	4001-AC-165	4001-AC-265	4001-AC-365	4001-CH-065	34
	4335-MC-100	2000-CO-090	2	4001-AC-185	4001-AC-285	4001-AC-385	4001-CH-085	46
	4335-MC-110	2000-CO-090	2	4001-AC-185	4001-AC-285	4001-AC-385	4001-CH-085	46

^Complete mandrel does not include cutting ring.

C: 68 - 87
Key on C: 1
C: 38 - 39
C: 60 - 65
C: 92

ⓘ = Imperial (in)
ⓜ = Metric (mm)

Ring Style Mandrels

4350 Series | Standard Length | Diameter Range: 0.6929" - 7.8976" (17.600 mm - 200.600 mm)

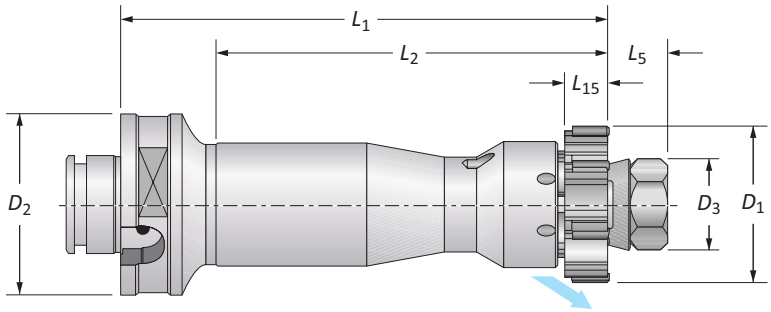

Series	4350	Shank Type	Modular	Application	Through Holes	Coolant	Radial

	D_1 Range		Mandrel					Shank		Part No.
	Imperial (inch)	Metric (mm)	D_3	L_5	L_{15}	L_2	L_1	D_2	Teeth	(Complete Mandrel^)
	0.6929 - 0.8504	17.600 - 21.599	12	11	11	81	116	50	6	**4350-MC-010***
	0.8505 - 1.0078	21.600 - 25.599	12	11	12	81	116	50	6	**4350-MC-020***
	1.0079 - 1.2834	25.600 - 32.599	15.6	11	14	102	137	50	6	**4350-MC-030***
	1.2835 - 1.5984	32.600 - 40.599	22	14	16	102	137	50	6	**4350-MC-040**
	1.5985 - 1.7952	40.600 - 45.599	25.4	15	16	102	137	50	6	**4350-MC-050**
m	1.7953 - 1.9527	45.600 - 49.599	30	20.5	18.5	105	140	50	6	**4350-MC-060**
	1.9528 - 2.3858	49.600 - 60.599	30	20.5	18.5	105	140	50	6	**4350-MC-070**
	2.3859 - 2.7795	60.600 - 70.599	40	24.5	18.5	105	140	63	6	**4350-MC-080**
	2.7796 - 3.1338	70.600 - 79.599	40	24.5	18.5	105	140	63	6	**4350-MC-090**
	3.1339 - 3.5669	79.600 - 90.599	56	28.5	18.5	105	140	63	8	**4350-MC-100**
	3.5670 - 3.9606	90.600 - 100.599	56	28.5	18.5	105	140	63	8	**4350-MC-110**

^Complete mandrel does not include cutting ring.
*0.6929" - 1.2834" (17.600 mm - 32.599 mm) diameter cutting rings are available as specials by contacting Application Engineering.

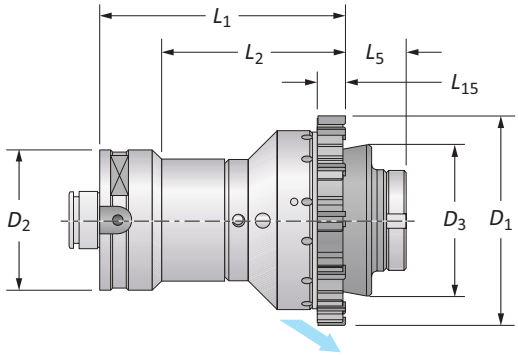

	D_1 Range		Mandrel					Shank		Part No.
	Imperial (inch)	Metric (mm)	D_3	L_5	L_{15}	L_2	L_1	D_2	Teeth	(Complete Mandrel^)
	3.9606 - 4.3543	100.600 - 110.599	73.8	35.5	18.5	–	140	80	10	**4350-MC-120**
	4.3544 - 4.5511	110.600 - 115.599	80.8	35.5	18.5	–	140	80	12	**4350-MC-130**
	4.5512 - 4.7480	115.600 - 120.599	86.8	35.5	18.5	–	140	80	12	**4350-MC-140**
	4.7481 - 4.9448	120.600 - 125.599	86.8	35.5	18.5	–	140	80	12	**4350-MC-150**
	4.9449 - 5.2204	125.600 - 132.599	90.8	35.5	18.5	–	140	80	12	**4350-MC-160**
	5.2205 - 5.4960	132.600 - 139.599	90.8	35.5	18.5	–	140	80	12	**4350-MC-170**
m	5.4961 - 5.7322	139.600 - 145.599	102.8	35.5	18.5	–	140	80	12	**4350-MC-180**
	5.7323 - 6.1259	145.600 - 155.599	107.8	35.5	18.5	–	140	80	12	**4350-MC-190**
	6.1260 - 6.5196	155.600 - 165.599	107.8	48.5	18.5	–	140	80	12	**4350-MC-200**
	6.5197 - 6.9133	165.600 - 175.599	117.8	48.5	18.5	–	140	80	12	**4350-MC-210**
	6.9134 - 7.3070	175.600 - 185.599	127.8	48.5	18.5	–	140	80	12	**4350-MC-220**
	7.3071 - 7.7007	185.600 - 195.599	137.8	48.5	18.5	–	140	80	12	**4350-MC-230**
	7.7008 - 7.8976	195.600 - 200.600	145.8	48.5	18.5	–	140	80	12	**4350-MC-240**

^Complete mandrel does not include cutting ring.

C: 68 - 87
Key on C: 1
C: 38 - 39
C: 60 - 65
C: 92

i = Imperial (in)
m = Metric (mm)

Ring Style Mandrels

4350 Series | Standard Length | Spare Parts

	Part No. (Complete Mandrel^)	Spare Parts 1 Drive Pins	1 Number of Drive Pins	2 Conical Ring	3 Nut	3 Wrench Size (mm)
	4350-MC-010	2000-CO-010	3	2010-AC-010	2000-DA-010	10
	4350-MC-020	2000-CO-020	3	2010-AC-010	2000-DA-010	10
	4350-MC-030	2000-CO-030	3	2010-AC-020	2000-DA-020	13
	4350-MC-040	2000-CO-040	2	2010-AC-030	2000-DA-060	19
	4350-MC-050	2000-CO-060	2	2010-AC-040	2000-DA-090	22
ⓜ	**4350-MC-060**	2000-CO-060	2	2010-AC-050	2000-GH-880	30 ◆
	4350-MC-070	2000-CO-070	2	2010-AC-050	2000-GH-880	30 ◆
	4350-MC-080	2000-CO-080	2	2010-AC-060	2000-GH-900	40 ◆
	4350-MC-090	2000-CO-090	2	2010-AC-060	2000-GH-900	40 ◆
	4350-MC-100	2000-CO-090	2	2010-AC-070	2000-GH-920	56 ◆
	4350-MC-110	2000-CO-090	2	2010-AC-070	2000-GH-920	56 ◆

^Complete mandrel does not include cutting ring.
◆ Spanner wrench.

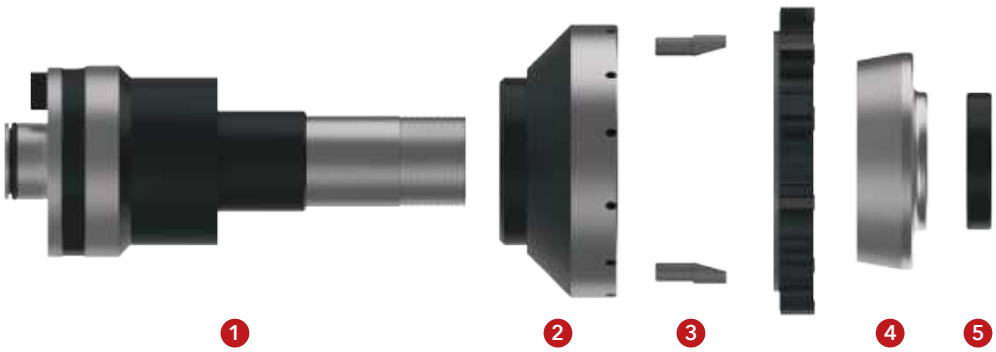

	Part No. (Complete Mandrel^)	Spare Parts 1 Mandrel	2 Flange	3 Drive Pins	3 Number of Drive Pins	4 Conical Ring	5 Nut	5 Wrench Size (mm)
	4350-MC-120	4350-MA-120	4355-FL-035	2000-CO-090	2	2060-BU-010	2000-GH-095	58 ◆
	4350-MC-130	4350-MA-120	4355-FL-045	2000-CO-090	2	2060-BU-020	2000-GH-095	58 ◆
	4350-MC-140	4350-MA-120	4355-FL-055	2000-CO-090	2	2060-BU-030	2000-GH-095	58 ◆
	4350-MC-150	4350-MA-120	4355-FL-065	2000-CO-090	2	2060-BU-030	2000-GH-095	58 ◆
	4350-MC-160	4350-MA-120	4355-FL-075	2000-CO-100	2	2060-BU-040	2000-GH-095	58 ◆
	4350-MC-170	4350-MA-120	4355-FL-085	2000-CO-100	2	2060-BU-040	2000-GH-095	58 ◆
ⓜ	**4350-MC-180**	4350-MA-120	4355-FL-095	2000-CO-100	2	2060-BU-050	2000-GH-095	58 ◆
	4350-MC-190	4350-MA-120	4355-FL-105	2000-CO-110	2	2060-BU-060	2000-GH-095	58 ◆
	4350-MC-200	4350-MA-200	4355-FL-115	2000-CO-110	2	2060-BU-070	2000-GH-120	90 ◆
	4350-MC-210	4350-MA-200	4355-FL-125	2000-CO-110	2	2060-BU-080	2000-GH-120	90 ◆
	4350-MC-220	4350-MA-200	4355-FL-135	2000-CO-120	2	2060-BU-090	2000-GH-120	90 ◆
	4350-MC-230	4350-MA-200	4355-FL-145	2000-CO-120	2	2060-BU-100	2000-GH-120	90 ◆
	4350-MC-240	4350-MA-200	4355-FL-155	2000-CO-120	2	2060-BU-110	2000-GH-120	90 ◆

^Complete mandrel does not include cutting ring.
◆ Spanner wrench.

ⓘ = Imperial (in)
ⓜ = Metric (mm)

A DRILLING
B BORING
C REAMING
D BURNISHING
E THREADING
X SPECIALS

Ring Style Mandrels

4355 Series | Standard Length | Diameter Range: 0.6929" - 7.8976" (17.600 mm - 200.600 mm)

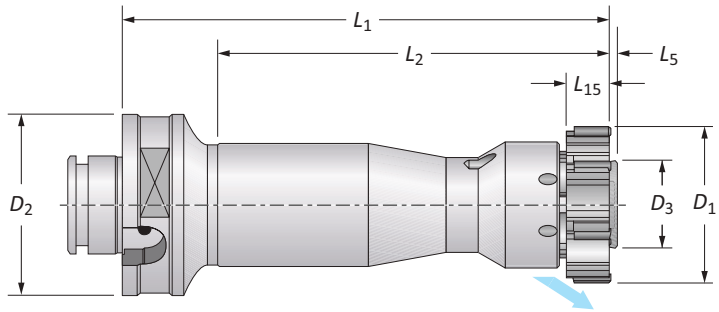

Series	4355	Shank Type	Modular	Application	Blind Holes	Coolant	Radial

	D_1 Range		Mandrel					Shank		Part No.
	Imperial (inch)	Metric (mm)	D_3	L_5	L_{15}	L_2	L_1	D_2	Teeth	(Complete Mandrel^)
	0.6929 - 0.8504	17.600 - 21.599	11.2	1	11	81	116	50	6	**4355-MC-010***
	0.8505 - 1.0078	21.600 - 25.599	11.2	1	12	81	116	50	6	**4355-MC-020***
	1.0079 - 1.1653	25.600 - 29.599	15.1	1	14	102	137	50	6	**4355-MC-030***
	1.1654 - 1.2834	29.600 - 32.599	15.1	1	14	102	137	50	6	**4355-MC-035***
	1.2835 - 1.4409	32.600 - 36.599	20.3	1	16	102	137	50	6	**4355-MC-040**
	1.4410 - 1.5984	36.600 - 40.599	20.3	1	16	102	137	50	6	**4355-MC-045**
	1.5985 - 1.7952	40.600 - 45.599	24.1	1	16	102	137	50	6	**4355-MC-050**
m	1.7953 - 1.9527	45.600 - 49.599	27.9	1.5	18.5	105	140	50	6	**4355-MC-060**
	1.9528 - 2.1889	49.600 - 55.599	27.9	1.5	18.5	105	140	50	6	**4355-MC-070**
	2.1890 - 2.3858	55.600 - 60.599	27.9	1.5	18.5	105	140	50	6	**4355-MC-075**
	2.3859 - 2.5826	60.600 - 65.599	37.1	1.5	18.5	105	140	63	6	**4355-MC-080**
	2.5827 - 2.7795	65.600 - 70.599	37.1	1.5	18.5	105	140	63	6	**4355-MC-085**
	2.7796 - 3.1338	70.600 - 79.599	37.1	1.5	18.5	105	140	63	6	**4355-MC-090**
	3.1339 - 3.5669	79.600 - 90.599	53.1	1.5	18.5	105	140	63	8	**4355-MC-100**
	3.5670 - 3.9606	90.600 - 100.599	53.1	1.5	18.5	105	140	63	8	**4355-MC-110**

^Complete mandrel does not include cutting ring.
*0.6929" - 1.2834" (17.600 mm - 32.599 mm) diameter cutting rings are available as specials by contacting Application Engineering.

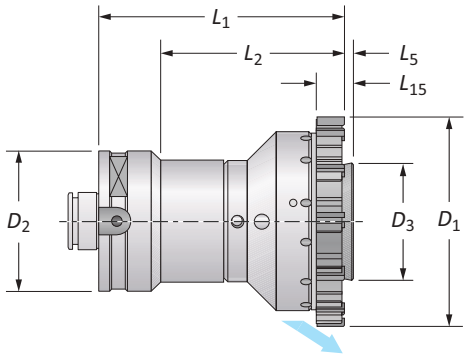

	D_1 Range		Mandrel					Shank		Part No.
	Imperial (inch)	Metric (mm)	D_3	L_5	L_{15}	L_2	L_1	D_2	Teeth	(Complete Mandrel^)
	3.9606 - 4.3543	100.600 - 110.599	70.3	1.5	18.5	–	140	80	10	**4355-MC-120**
	4.3544 - 4.5511	110.600 - 115.599	76.3	1.5	18.5	–	140	80	12	**4355-MC-130**
	4.5512 - 4.7480	115.600 - 120.599	83.3	1.5	18.5	–	140	80	12	**4355-MC-140**
	4.7481 - 4.9448	120.600 - 125.599	87.3	1.5	18.5	–	140	80	12	**4355-MC-150**
	4.9449 - 5.2204	125.600 - 132.599	87.3	1.5	18.5	–	140	80	12	**4355-MC-160**
	5.2205 - 5.4960	132.600 - 139.599	87.3	1.5	18.5	–	140	80	12	**4355-MC-170**
m	5.4961 - 5.7322	139.600 - 145.599	99.3	1.5	18.5	–	140	80	12	**4355-MC-180**
	5.7323 - 6.1259	145.600 - 155.599	104.3	1.5	18.5	–	140	80	12	**4355-MC-190**
	6.1260 - 6.5196	155.600 - 165.599	104.3	1.5	18.5	–	140	80	12	**4355-MC-200**
	6.5197 - 6.9133	165.600 - 175.599	114.3	1.5	18.5	–	140	80	12	**4355-MC-210**
	6.9134 - 7.3070	175.600 - 185.599	124.3	1.5	18.5	–	140	80	12	**4355-MC-220**
	7.3071 - 7.7007	185.600 - 195.599	134.3	1.5	18.5	–	140	80	12	**4355-MC-230**
	7.7008 - 7.8976	195.600 - 200.600	142.3	1.5	18.5	–	140	80	12	**4355-MC-240**

^Complete mandrel does not include cutting ring.

C: 68 - 87
Key on C: 1
C: 38 - 39
C: 60 - 65
C: 92

i = Imperial (in)
m = Metric (mm)

Ring Style Mandrels

4355 Series | Standard Length | Spare Parts

	Part No. (Complete Mandrel^)	Spare Parts 1 Drive Pins	1 Number of Drive Pins	1 Conical Ring	2 Conical Ring (2nd Expansion)	2 Conical Ring (3rd Expansion)	3 Adjusting Key	3 Wrench Size (mm)
	4355-MC-010	2000-CO-010	3	4001-AC-115	4001-AC-215	–	4001-CH-015	10
	4355-MC-020	2000-CO-020	3	4001-AC-115	4001-AC-215	–	4001-CH-015	10
	4355-MC-030	2000-CO-030	3	4001-AC-125	4001-AC-225	4001-AC-325	4001-CH-025	13
	4355-MC-035	2000-CO-040	2	4001-AC-125	4001-AC-225	4001-AC-325	4001-CH-025	13
	4355-MC-040	2000-CO-040	2	4001-AC-135	4001-AC-235	4001-AC-335	4001-CH-035	18
	4355-MC-045	2000-CO-050	2	4001-AC-135	4001-AC-235	4001-AC-335	4001-CH-035	18
	4355-MC-050	2000-CO-060	2	4001-AC-145	4001-AC-245	4001-AC-345	4001-CH-045	22
m	**4355-MC-060**	2000-CO-060	2	4001-AC-155	4001-AC-255	4001-AC-355	4001-CH-055	26
	4355-MC-070	2000-CO-070	2	4001-AC-155	4001-AC-255	4001-AC-355	4001-CH-055	26
	4355-MC-075	2000-CO-080	2	4001-AC-155	4001-AC-255	4001-AC-355	4001-CH-055	26
	4355-MC-080	2000-CO-080	2	4001-AC-165	4001-AC-265	4001-AC-365	4001-CH-065	34
	4355-MC-085	2000-CO-090	2	4001-AC-165	4001-AC-265	4001-AC-365	4001-CH-065	34
	4355-MC-090	2000-CO-090	2	4001-AC-165	4001-AC-265	4001-AC-365	4001-CH-065	34
	4355-MC-100	2000-CO-090	2	4001-AC-185	4001-AC-285	4001-AC-385	4001-CH-085	46
	4355-MC-110	2000-CO-090	2	4001-AC-185	4001-AC-285	4001-AC-385	4001-CH-085	46

^Complete mandrel does not include cutting ring.

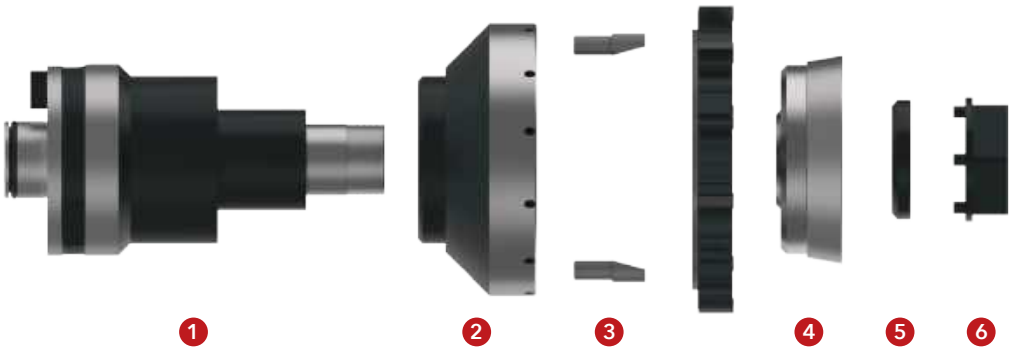

	Part No. (Complete Mandrel^)	Spare Parts 1 Mandrel	2 Flange	3 Drive Pins	3 Number of Drive Pins	4 Conical Ring	5 Nut	6 Adjusting Key	6 Wrench Size (mm)
	4355-MC-120	4355-MA-120	4355-FL-035	2000-CO-090	2	4001-AC-116	4001-GH-035	4001-CH-135	46
	4355-MC-130	4355-MA-120	4355-FL-045	2000-CO-090	2	4001-AC-126	4001-GH-035	4001-CH-135	46
	4355-MC-140	4355-MA-120	4355-FL-055	2000-CO-090	2	4001-AC-136	4001-GH-035	4001-CH-135	46
	4355-MC-150	4355-MA-120	4355-FL-065	2000-CO-090	2	4001-AC-136	4001-GH-035	4001-CH-135	46
	4355-MC-160	4355-MA-120	4355-FL-075	2000-CO-100	2	4001-AC-146	4001-GH-035	4001-CH-135	46
	4355-MC-170	4355-MA-120	4355-FL-085	2000-CO-100	2	4001-AC-146	4001-GH-035	4001-CH-135	46
m	**4355-MC-180**	4355-MA-120	4355-FL-095	2000-CO-100	2	4001-AC-156	4001-GH-035	4001-CH-135	46
	4355-MC-190	4355-MA-120	4355-FL-105	2000-CO-110	2	4001-AC-166	4001-GH-035	4001-CH-135	46
	4355-MC-200	4355-MA-200	4355-FL-115	2000-CO-110	2	4001-AC-176	4001-GH-115	4001-CH-115	46
	4355-MC-210	4355-MA-200	4355-FL-125	2000-CO-110	2	4001-AC-186	4001-GH-115	4001-CH-115	46
	4355-MC-220	4355-MA-200	4355-FL-135	2000-CO-120	2	4001-AC-196	4001-GH-115	4001-CH-115	46
	4355-MC-230	4355-MA-200	4355-FL-145	2000-CO-120	2	4001-AC-117	4001-GH-115	4001-CH-115	46
	4355-MC-240	4355-MA-200	4355-FL-155	2000-CO-120	2	4001-AC-127	4001-GH-115	4001-CH-115	46

^Complete mandrel does not include cutting ring.

i = Imperial (in)
m = Metric (mm)

A DRILLING
B BORING
C REAMING
D BURNISHING
E THREADING
X SPECIALS

Ring Style Mandrels

4300 Series | Long Length | Diameter Range: 0.6929" - 3.9606" (17.600 mm - 100.599 mm)

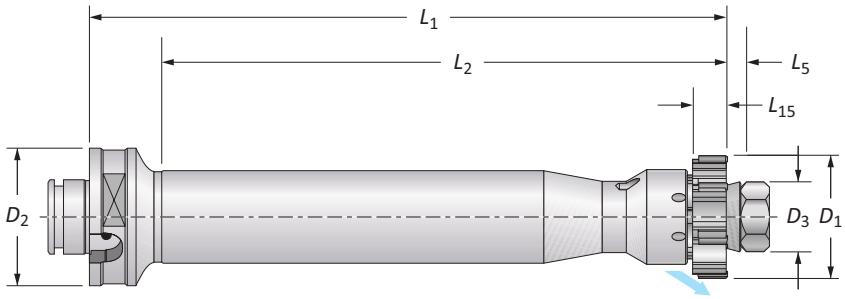

Series	4300	Shank Type	Modular	Application	Through Holes	Coolant	Radial

	D_1 Range		Mandrel							
	Imperial (inch)	Metric (mm)	D_3	L_5	L_{15}	L_2	L_1	D_2	Teeth	Part No. (Complete Mandrel^)
	0.6929 - 0.8504	17.600 - 21.599	12	11	11	121	156	50	6	**4300-MC-010***
	0.8505 - 1.0078	21.600 - 25.599	12	11	12	121	156	50	6	**4300-MC-020***
	1.0079 - 1.2834	25.600 - 32.599	15.6	11	14	153	188	50	6	**4300-MC-030***
	1.2835 - 1.5984	32.600 - 40.599	22	14	16	179	214	50	6	**4300-MC-040**
	1.5985 - 1.7952	40.600 - 45.599	25.4	15	16	201	236	50	6	**4300-MC-050**
m	1.7953 - 1.9527	45.600 - 49.599	30	20.5	18.5	214	249	50	6	**4300-MC-060**
	1.9528 - 2.3858	49.600 - 60.599	30	20.5	18.5	214	249	50	6	**4300-MC-070**
	2.3859 - 2.7795	60.600 - 70.599	40	24.5	18.5	237	272	63	6	**4300-MC-080**
	2.7796 - 3.1338	70.600 - 79.599	40	24.5	18.5	237	272	63	6	**4300-MC-090**
	3.1339 - 3.5669	79.600 - 90.599	56	28.5	18.5	245	280	63	8	**4300-MC-100**
	3.5670 - 3.9606	90.600 - 100.599	56	28.5	18.5	245	280	63	8	**4300-MC-110**

^Complete mandrel does not include cutting ring.
*0.6929" - 1.2834" (17.600 mm - 32.599 mm) diameter cutting rings are available as specials by contacting Application Engineering.

C: 68 - 87
Key on C: 1
C: 38 - 39
C: 60 - 65
C: 92

i = Imperial (in)
m = Metric (mm)

Ring Style Mandrels

4300 Series | Long Length | Spare Parts

	Part No. (Complete Mandrel^)	Spare Parts 1 Drive Pins	Number of Drive Pins	2 Conical Ring	3 Nut	Wrench Size (mm)
	4300-MC-010	2000-CO-010	3	2010-AC-010	2000-DA-010	10
	4300-MC-020	2000-CO-020	3	2010-AC-010	2000-DA-010	10
	4300-MC-030	2000-CO-030	3	2010-AC-020	2000-DA-020	13
	4300-MC-040	2000-CO-040	2	2010-AC-030	2000-DA-060	19
	4300-MC-050	2000-CO-060	2	2010-AC-040	2000-DA-090	22
m	**4300-MC-060**	2000-CO-060	2	2010-AC-050	2000-GH-880	30
	4300-MC-070	2000-CO-070	2	2010-AC-050	2000-GH-880	30
	4300-MC-080	2000-CO-080	2	2010-AC-060	2000-GH-900	40
	4300-MC-090	2000-CO-090	2	2010-AC-060	2000-GH-900	40
	4300-MC-100	2000-CO-090	2	2010-AC-070	2000-GH-920	56
	4300-MC-110	2000-CO-090	2	2010-AC-070	2000-GH-920	56

^Complete mandrel does not include cutting ring.

C: 68 - 87
Key on C: 1
C: 38 - 39
C: 60 - 65
C: 92

i = Imperial (in)
m = Metric (mm)

A DRILLING
B BORING
C REAMING
D BURNISHING
E THREADING
X SPECIALS

Ring Style Mandrels

4305 Series | Long Length | Diameter Range: 0.6929" - 3.9606" (17.600 mm - 100.599 mm)

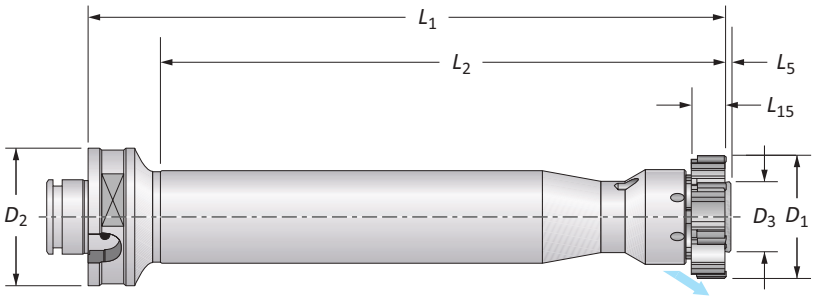

Series	4305	Shank Type	Modular	Application	Blind Holes	Coolant	Radial

	D_1 Range		Mandrel							
	Imperial (inch)	Metric (mm)	D_3	L_5	L_{15}	L_2	L_1	D_2	Teeth	Part No. (Complete Mandrel^)
	0.6929 - 0.8504	17.600 - 21.599	11.2	1	11	121	156	50	6	**4305-MC-010***
	0.8505 - 1.0078	21.600 - 25.599	11.2	1	12	121	156	50	6	**4305-MC-020***
	1.0079 - 1.1653	25.600 - 29.599	15.1	1	14	153	188	50	6	**4305-MC-030***
	1.1654 - 1.2834	29.600 - 32.599	15.1	1	14	153	188	50	6	**4305-MC-035***
	1.2835 - 1.4409	32.600 - 36.599	20.3	1	16	179	214	50	6	**4305-MC-040**
	1.4410 - 1.5984	36.600 - 40.599	20.3	1	16	179	214	50	6	**4305-MC-045**
	1.5985 - 1.7952	40.600 - 45.599	24.1	1	16	201	236	50	6	**4305-MC-050**
m	1.7953 - 1.9527	45.600 - 49.599	27.9	1.5	18.5	214	249	50	6	**4305-MC-060**
	1.9528 - 2.1889	49.600 - 55.599	27.9	1.5	18.5	214	249	50	6	**4305-MC-070**
	2.1890 - 2.3858	55.600 - 60.599	27.9	1.5	18.5	214	249	50	6	**4305-MC-075**
	2.3859 - 2.5826	60.600 - 65.599	37.1	1	18.5	237	272	63	6	**4305-MC-080**
	2.5827 - 2.7795	65.600 - 70.599	37.1	1	18.5	237	272	63	6	**4305-MC-085**
	2.7796 - 3.1338	70.600 - 79.599	37.1	1	18.5	237	272	63	6	**4305-MC-090**
	3.1339 - 3.5669	79.600 - 90.599	53.1	1.5	18.5	245	280	63	8	**4305-MC-100**
	3.5670 - 3.9606	90.600 - 100.599	53.1	1.5	18.5	245	280	63	8	**4305-MC-110**

^Complete mandrel does not include cutting ring.
*0.6929" - 1.2834" (17.600 mm - 32.599 mm) diameter cutting rings are available as specials by contacting Application Engineering.

C: 68 - 87
Key on C: 1
C: 38 - 39
C: 60 - 65
C: 92

i = Imperial (in)
m = Metric (mm)

Ring Style Mandrels

4305 Series | Long Length | Spare Parts

	Part No. (Complete Mandrel^)	Spare Parts 1: Drive Pins	1: Number of Drive Pins	2: Conical Ring	2: Conical Ring (2nd Expansion)	2: Conical Ring (3rd Expansion)	3: Adjusting Key	3: Wrench Size (mm)
	4305-MC-010	2000-CO-010	3	4001-AC-115	4001-AC-215	–	4001-CH-015	10
	4305-MC-020	2000-CO-020	3	4001-AC-115	4001-AC-215	–	4001-CH-015	10
	4305-MC-030	2000-CO-030	3	4001-AC-125	4001-AC-225	4001-AC-325	4001-CH-025	13
	4305-MC-035	2000-CO-040	2	4001-AC-125	4001-AC-225	4001-AC-325	4001-CH-025	13
	4305-MC-040	2000-CO-040	2	4001-AC-135	4001-AC-235	4001-AC-335	4001-CH-035	18
	4305-MC-045	2000-CO-050	2	4001-AC-135	4001-AC-235	4001-AC-335	4001-CH-035	18
	4305-MC-050	2000-CO-060	2	4001-AC-145	4001-AC-245	4001-AC-345	4001-CH-045	22
ⓜ	**4305-MC-060**	2000-CO-060	2	4001-AC-155	4001-AC-255	4001-AC-355	4001-CH-055	26
	4305-MC-070	2000-CO-070	2	4001-AC-155	4001-AC-255	4001-AC-355	4001-CH-055	26
	4305-MC-075	2000-CO-080	2	4001-AC-155	4001-AC-255	4001-AC-355	4001-CH-055	26
	4305-MC-080	2000-CO-080	2	4001-AC-165	4001-AC-265	4001-AC-365	4001-CH-065	34
	4305-MC-085	2000-CO-090	2	4001-AC-165	4001-AC-265	4001-AC-365	4001-CH-065	34
	4305-MC-090	2000-CO-090	2	4001-AC-165	4001-AC-265	4001-AC-365	4001-CH-065	34
	4305-MC-100	2000-CO-090	2	4001-AC-185	4001-AC-285	4001-AC-385	4001-CH-085	46
	4305-MC-110	2000-CO-090	2	4001-AC-185	4001-AC-285	4001-AC-385	4001-CH-085	46

^Complete mandrel does not include cutting ring.

C: 68 - 87 C: 38 - 39 C: 60 - 65 C: 92
Key on C: 1

ⓘ = Imperial (in)
ⓜ = Metric (mm)

Radial Adjusting Shanks

Large range of shanks for different machine types	Highly adjustable for improved concentricity	All shanks are available with through coolant

All the Pieces You Need

Modular System courtesy of Ceriu

DIN 69871/1 B and A

HSK-A DIN 69893/1

JMTBA MAS-403
BT B and BT

Straight

Collet Chuck Adapter

Cylindrical Shank Adapter

Radial Adjusting Shanks

Setup Information

Radial Adjusting Shanks and Ring Style Arbors

The following is a quick guide for setting up a radial adjusting shank and a ring style reamer. The ring reamer arbor does not contain the tang needed to connect to the shank. The tang must first be removed from the shank and then installed into the reamer arbor (demonstrated below).

Step 1:
The tang comes installed with the shank. Loosen the clamping screw on each side and remove the tang from the shank.

Step 2:
Thread the tang into the back end of the ring arbor. Use a bench vise and wrench to tighten.

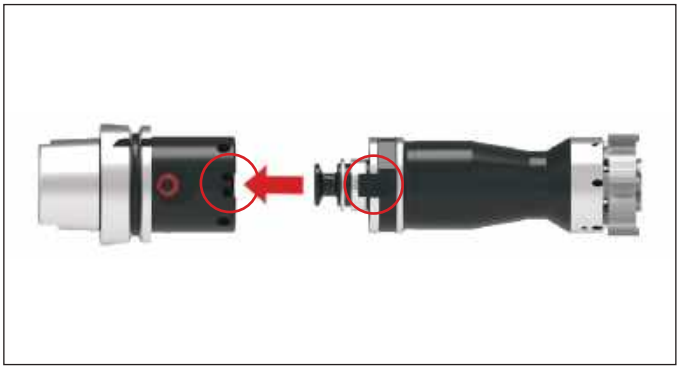

Step 3:
Assemble the ring arbor to the shank. With the clamping screws still loosened, align the key on the arbor to the keyway on the shank.

Step 4:
Once the ring arbor is connected with the shank, tighten the clamping screws to secure the tang back into place.

Radial Adjusting Shanks

DIN 69871/1 B and A

Maximum radial adjustment is ±0.008" (0.20 mm) on diameter.

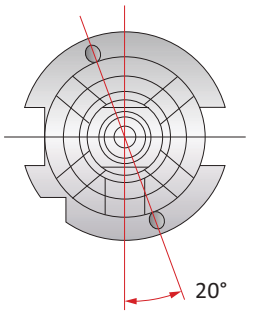

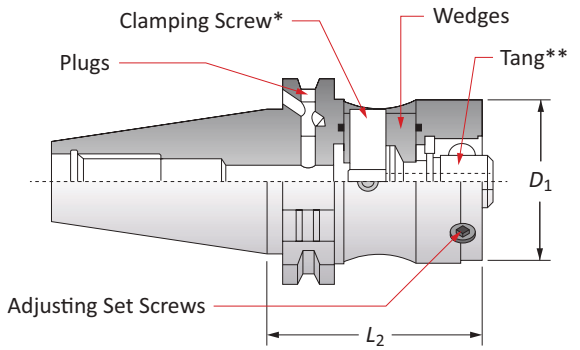

Shank					Spare Parts					
ISO Taper	D_1	L_2	Retention Knob Thread Size	Part No.	Wedges + O-Ring	Clamping Screw*	Adjusting Set Screws	Plugs	Replacement Tang**	Clamping Screw Key
40	50	65	M16 x 2	**02B.40.50L.65**	ATR14102.2.3	ATR14102.1	M8x1x10G	M5x5TG	ATT14103	6 mm
40	63	85	M16 x 2	**02B.40.63L.85**	ATR14108.2.3	ATR14108.1	M8x1x14G	M5x5TG	ATT14104	6 mm
45	50	70	M20 x 2.5	**02B.45.50L.70**	ATR14102.2.3	ATR14102.1	M8x1x10G	M5x5TG	ATT14103	6 mm
45	63	70	M20 x 2.5	**02B.45.63L.70**	ATR14108.2.3	ATR14108.1	M8x1x14G	M5x5TG	ATT14104	6 mm
50	50	70	M24 x 3	**02B.50.50L.70**	ATR14102.2.3	ATR14102.1	M8x1x10G	M5x5TG	ATT14103	6 mm
50	63	70	M24 x 3	**02B.50.63L.70**	ATR14108.2.3	ATR14108.1	M8x1x14G	M5x5TG	ATT14104	6 mm
50	80	70	M24 x 3	❖ **02B.50.80L.70**	ATR18775.2.3	ATR18775.1	M8x1x20G	M5x5TG	ATT14104	6 mm

* Light torque exerted on the clamping screw transmits high axial forces, which provide stiffness and extreme accuracy to the assembly.
** Tang must be fitted to all reamer arbors and adapters prior to assembly.
❖ Could cause interference with tool changer mechanism.
NOTE: Shanks can be converted into DIN 69871/1A coolant by screwing the two plugs clockwise to the end of their stroke.

C: 60
Key on C: 1

Modular System courtesy of Ccerit

Reference Key

Symbol	Attribute
D_1	Modular shank size
L_2	Gage length

Radial Adjusting Shanks

JMTBA MAS-403 BT B and BT

Maximum radial adjustment is ±0.008" (0.20 mm) on diameter.

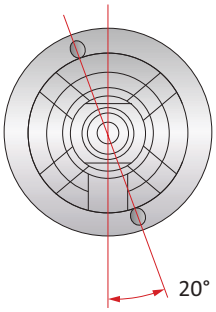

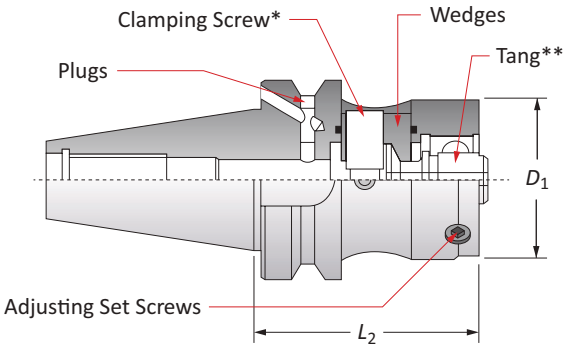

Shank					Spare Parts					
BT Taper	D_1	L_2	Retention Knob Thread Size	Part No.	Wedges + O-ring	Clamping Screw*	Adjusting Set Screws	Plugs	Replacement Tang**	Clamping Screw Key
40	50	70	M16 x 2	**BTB.40.50L.70**	ATR14102.2.3	ATR14102.1	M8x1x10G	M5x5TG	ATT14103	6 mm
40	63	80	M16 x 2	**BTB.40.63L.80**	ATR14108.2.3	ATR14108.1	M8x1x14G	M5x5TG	ATT14104	6 mm
50	50	90	M24 x 3	**BTB.50.50L.90**	ATR14102.2.3	ATR14102.1	M8x1x10G	M5x5TG	ATT14103	6 mm
50	63	90	M24 x 3	**BTB.50.63L.90**	ATR14108.2.3	ATR14108.1	M8x1x14G	M5x5TG	ATT14104	6 mm
50	80	90	M24 x 3	**BTB.50.80L.90**	ATR18775.2.3	ATR18775.1	M8x1x20G	M5x5TG	ATT14104	6 mm

* Light torque exerted on the clamping screw transmits high axial forces, which provide stiffness and extreme accuracy to the assembly.
** Tang must be fitted to all ring arbors and adapters prior to assembly.
NOTE: Shanks can be converted into MAS-403 BT coolant by screwing the two plugs clockwise to the end of their stroke.

C: 60
Key on C: 1

Modular System courtesy of Cerit

Reference Key

Symbol	Attribute
D_1	Modular shank size
L_2	Gage length

Radial Adjusting Shanks

HSK-A DIN 69893/1

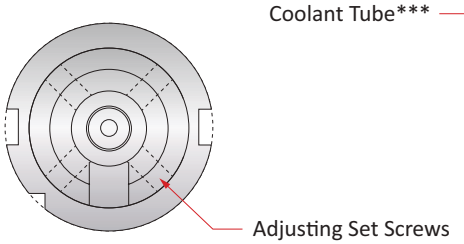

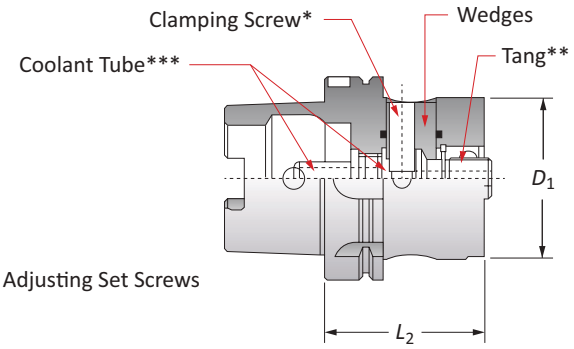

Shank				Spare Parts						
HSK	D_1	L_2	Part No.	Wedges + O-Ring	Clamping Screw*	Adjusting Set Screws	Replacement Tang**	Clamping Screw Key	Coolant Tube Key	Coolant Tube***
63	50	70	**HSKA.63.50L.70**	ATR14102.2.3	ATR14102.1	M8x1x10G	ATT14103	6 mm	ATR23856	ATT23728
63	63	75	**HSKA.63.63L.75**	ATR.41613.4	ATR14108.1	M8x1x14G	ATT14104	6 mm	ATR23856	ATT23728
100	50	80	**HSKA.100.50L.80**	ATR14102.2.3	ATR14102.1	M8x1x10G	ATT14103	6 mm	ATR23856	ATT23656
100	63	80	**HSKA.100.63L.80**	ATR14108.2.3	ATR14108.1	M8x1x14G	ATT14104	6 mm	ATR23856	ATT23656
100	80	80	**HSKA.100.80L.80**	ATR18775.2.3	ATR18775.1	M8x1x20G	ATT14104	6 mm	ATR23856	ATT23656

* Light torque exerted on the clamping screw transmits high axial forces, which provide stiffness and extreme accuracy to the assembly.
** Tang must be fitted to all ring arbors and adapters prior to assembly.
*** Coolant tube sold separately.

C: 60
Key on C: 1

Modular System courtesy of Ccerit

Reference Key

Symbol	Attribute
D_1	Modular shank size
L_2	Gage length

Radial Adjusting Shanks

Straight

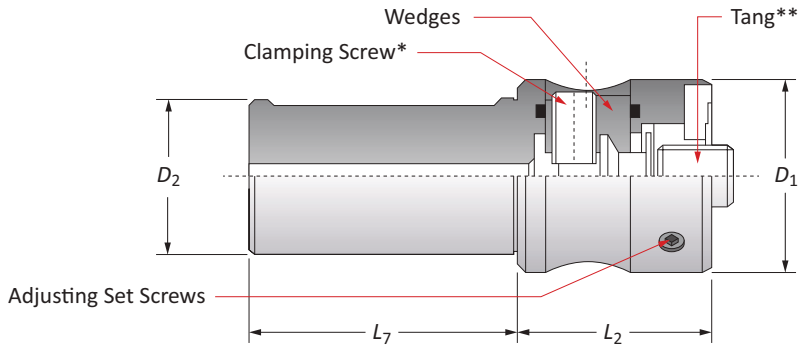

Shank					Spare Parts				
D_1	D_2	L_2	L_7	Part No.	Wedges + O-Ring	Clamping Screw*	Adjusting Set Screws	Replacement Tang**	Clamping Screw Key
50	25	50	70	**CIL.25.50.50**	ATR14102.2.3	ATR14102.1	M8x1x10G	ATT14103	6 mm
50	32	50	70	**CIL.32.50.50**	ATR14102.2.3	ATR14102.1	M8x1x10G	ATT14103	6 mm
50	40	50	70	**CIL.40.50.50**	ATR14102.2.3	ATR14102.1	M8x1x10G	ATT14103	6 mm

* Light torque exerted on the clamping screw transmits high axial forces, which provide stiffness and extreme accuracy to the assembly.
** Tang must be fitted to all ring arbors and adapters prior to assembly.

C: 60
Key on C: 1

Modular System courtesy of Cerit

Reference Key

Symbol	Attribute
D_1	Modular shank size
D_2	Shank diameter
L_2	Gage length
L_7	Shank length

Radial Adjusting Adapters

Collet Chuck Adapters

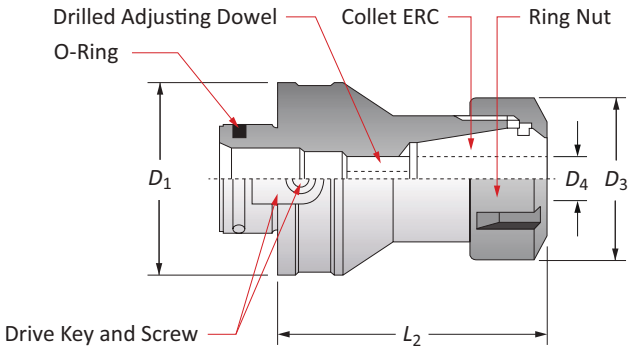

Adapter						Spare Parts					
Collet Sleeve Size*	D_1	D_3	D_4	L_2	Part No.	Clamping Screw	Ring Nut	Adjusting Dowel	Drive Key	Ring Nut Wrench	Adjusting Dowel Key
ERC25	50	42	0.5 - 16 mm	70	**30.50R.25.70**	M4x8V	G25S	M12x16GF	TAB3924	CH25S	6 mm
ERC32	50	50	1 - 20 mm	70	**30.50R.32.70**	M4x8V	G32S	M16x15x18GF	TAB3924	CH32S	8 mm
ERC32	63	50	1 - 20 mm	90	**30.63R.32.90**	M6x12V	G32S	M12x16GF	TAB3923.1	CH32S	6 mm
ERC40	63	63	2 - 30 mm	90	**30.63R.40.90**	M6x12V	G40S	M20x2x20GF	TAB3923.1	CH40S	10 mm
ERC32	80	50	1 - 20 mm	90	**30.80R.32.90**	M6x16V	G32S	M12x16GF	TAB3923.2	CH32S	6 mm
ERC40	80	63	2 - 30 mm	90	**30.80R.40.90**	M6x16V	G40S	M20x2x20GF	TAB3923.2	CH40S	10 mm

*Collet sleeve not included

Reference Key

Symbol	Attribute
D_1	Modular shank size
D_3	Body diameter
D_4	Shank diameter
L_2	Gage length

C: 60
Key on C: 1

Modular System courtesy of cerit

Radial Adjusting Adapters

Cylindrical Shank Adapters

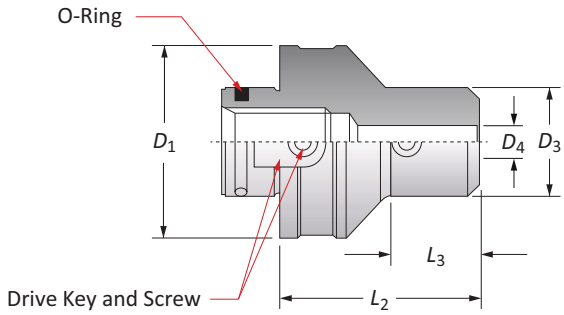

Adapter						Spare Parts			
D_1	D_4	D_3	L_2	L_3	Part No.	Drive Key	Screw	Set Screw	Set Screw Key
50	6	25	50	22.5	**35.50R.06.50**	TAB3924	M4x8V	M6x8G	3 mm
50	8	28	50	24.5	**35.50R.08.50**	TAB3924	M4x8V	M8x8G	4 mm
50	10	35	50	26.5	**35.50R.10.50**	TAB3924	M4x8V	M10x10G	5 mm
50	12	42	60	38.5	**35.50R.12.60**	TAB3924	M4x8V	M12x12G	6 mm
50	14	44	60	42	**35.50R.14.60**	TAB3924	M4x8V	M12x12G	6 mm
50	16	48	60	40	**35.50R.16.60**	TAB3924	M4x8V	M14x14G	6 mm
50	18	50	60	–	**35.50R.18.60**	TAB3924	M4x8V	M14x14G	6 mm
50	20	52	60	41	**35.50R.20.60**	TAB3924	M4x8V	M16x2x14G	8 mm
63	8	28	60	28	**35.63R.08.60**	TAB3923.1	M6x12V	M8x8G	4 mm
63	10	35	70	40	**35.63R.10.70**	TAB3923.1	M6x12V	M10x10G	5 mm
63	12	42	70	42	**35.63R.12.70**	TAB3923.1	M6x12V	M12x12G	6 mm
63	14	44	60	32	**35.63R.14.60**	TAB3923.1	M6x12V	M12x12G	6 mm
63	16	48	70	44	**35.63R.16.70**	TAB3923.1	M6x12V	M14x14G	6 mm
63	18	50	70	40	**35.63R.18.70**	TAB3923.1	M6x12V	M14x14G	6 mm
63	20	52	70	45	**35.63R.20.70**	TAB3923.1	M6x12V	M16x2x14G	8 mm
50	25	65	80	61	**40.50R.25.80**	TAB3924	M4x8V	M18x2x18G	8 mm
50	32	72	80	65	**40.50R.32.80**	TAB3924	M4x8V	M20x2x18G	10 mm
63	25	65	80	58	**40.63R.25.80**	TAB3923.1	M6x12V	M18x2x18G	8 mm
63	32	72	80	–	**40.63R.32.80**	TAB3923.1	M6x12V	M20x2x18G	10 mm
80	25	65	80	50.5	**40.80R.25.80**	TAB3923.2	M6x12V	M18x2x18G	8 mm
80	32	72	80	54	**40.80R.32.80**	TAB3923.2	M6x12V	M20x2x18G	10 mm

Reference Key

Symbol	Attribute
D_1	Modular shank size
D_3	Body diameter
D_4	Shank diameter
L_2	Gage length
L_3	Reference length

C: 60
Key on C: 1

Modular System courtesy of Cerit

Recommended Cutting Data | Imperial (inch)

Replaceable Head Style | 7000 Series

ISO	Material	Hardness (BHN)	Speed (SFM) Uncoated Carbide	Speed (SFM) Coated Carbide	Speed (SFM) Cermet	Recommended Feed (IPR) by Reamer Diameter 0.4646" - 0.8504" Lead A, G	0.4646" - 0.8504" Lead E, N, M	0.8505" - 1.5590" Lead A, G	0.8505" - 1.5590" Lead E, N, M	1.5591" - 3.1732" Lead A, G	1.5591" - 3.1732" Lead E, N, M
P	**Free-Machining Steel**	100 - 180	33 - 66	197 - 262	295 - 984	0.010 - 0.024	0.020 - 0.039	0.012 - 0.031	0.024 - 0.047	0.024 - 0.039	0.028 - 0.059
	1118, 1215, 12L14, etc.	180 - 250	23 - 49	131 - 230	262 - 656	0.012 - 0.024	0.016 - 0.031	0.016 - 0.031	0.020 - 0.039	0.020 - 0.035	0.024 - 0.047
	Low-Carbon Steel	85 - 180	33 - 66	197 - 262	295 - 984	0.010 - 0.024	0.020 - 0.039	0.012 - 0.031	0.024 - 0.047	0.024 - 0.039	0.028 - 0.059
	1010, 1020, 1025, 1522, 1144, etc.	180 - 275	23 - 49	131 - 230	262 - 656	0.012 - 0.024	0.016 - 0.031	0.016 - 0.031	0.020 - 0.039	0.020 - 0.035	0.024 - 0.047
	Medium-Carbon Steel	125 - 180	33 - 66	197 - 262	295 - 984	0.010 - 0.024	0.020 - 0.039	0.012 - 0.031	0.024 - 0.047	0.024 - 0.039	0.028 - 0.059
	1030, 1040, 1050, 1527, 1140, 1151, etc.	180 - 325	23 - 49	131 - 230	262 - 656	0.012 - 0.024	0.016 - 0.031	0.016 - 0.031	0.020 - 0.039	0.020 - 0.035	0.024 - 0.047
	Alloy Steel	125 - 180	20 - 33	131 - 197	164 - 197	0.012 - 0.024	0.016 - 0.031	0.016 - 0.031	0.020 - 0.039	0.020 - 0.035	0.024 - 0.047
	4140, 5140, 8640, etc.	180 - 375	13 - 26	131 - 164	197 - 394	0.010 - 0.020	0.012 - 0.024	0.012 - 0.024	0.016 - 0.031	0.016 - 0.028	0.020 - 0.039
	High-Strength Alloy 4340, 4330V, 300M, etc.	240 - 450	13 - 26	131 - 164	197 - 394	0.010 - 0.020	0.012 - 0.024	0.012 - 0.024	0.016 - 0.031	0.016 - 0.028	0.020 - 0.039
	Structural Steel	125 - 180	33 - 66	197 - 262	295 - 984	0.010 - 0.024	0.020 - 0.039	0.012 - 0.031	0.024 - 0.047	0.024 - 0.039	0.028 - 0.059
	A36, A285, A516	180 - 350	23 - 49	131 - 230	262 - 656	0.012 - 0.024	0.016 - 0.031	0.016 - 0.031	0.020 - 0.039	0.020 - 0.035	0.024 - 0.047
	Tool Steel	150 - 200	33 - 66	197 - 262	295 - 984	0.010 - 0.024	0.020 - 0.039	0.012 - 0.031	0.024 - 0.047	0.024 - 0.039	0.028 - 0.059
	H-13, H-21, A-4, 0-2, S-3, etc.	200 - 250	23 - 49	131 - 230	262 - 656	0.012 - 0.024	0.016 - 0.031	0.016 - 0.031	0.020 - 0.039	0.020 - 0.035	0.024 - 0.047
S	**High-Temp Alloy** Hastelloy B, Inconel 600, etc.	140 - 310	13 - 33	98 - 164	–	0.008 - 0.016	–	0.012 - 0.020	–	0.016 - 0.024	–
	Titanium Alloy	140 - 310	13 - 49	98 - 164	–	0.008 - 0.016	–	0.012 - 0.020	–	0.016 - 0.024	–
M	**Stainless Steel 400 Series** 416, 420, etc.	135 - 350	20 - 33	131 - 197	164 - 197	0.012 - 0.024	0.016 - 0.031	0.016 - 0.031	0.020 - 0.039	0.020 - 0.035	0.024 - 0.047
	Stainless Steel 300 Series 304, 316, 17-4PH, etc.	135 - 275	20 - 33	131 - 197	164 - 197	0.012 - 0.024	0.016 - 0.031	0.016 - 0.031	0.020 - 0.039	0.020 - 0.035	0.024 - 0.047
K	**Grey Cast Iron, Ductile Cast Iron,**	< 200	66 - 131	394 - 656	–	0.008 - 0.024	0.020 - 0.039	0.012 - 0.028	0.024 - 0.047	0.016 - 0.031	0.031 - 0.063
	Spheroidal Cast Iron (Pearlitic)	> 200	49 - 98	394 - 656	–	0.008 - 0.024	0.020 - 0.039	0.012 - 0.028	0.024 - 0.047	0.016 - 0.031	0.031 - 0.063
	Spheroidal Cast Iron (Ferritic)	260 - 320	33 - 49	-	295 - 459	0.008 - 0.024	0.020 - 0.024	0.012 - 0.028	0.024 - 0.047	0.016 - 0.031	0.031 - 0.063
N	**Copper and Alloys Brass**	< 500	197 - 656	328 - 656	–	0.008 - 0.016	–	0.012 - 0.024	–	0.016 - 0.031	–
	Bronze Bronze Phosphorous	< 180	66 - 131	262 - 525	328 - 984	0.012 - 0.024	0.016 - 0.039	0.012 - 0.024	0.020 - 0.047	0.012 - 0.024	0.024 - 0.059
	Aluminum and Alloys	< 150	66 - 328	–	–	0.012 - 0.024	–	0.016 - 0.039	–	0.016 - 0.039	–

Formulas

1. **RPM = (SFM • 3.82) / DIA**

where:

RPM = revolutions per minute (rev/min)
SFM = speed (ft/min)
DIA = diameter of reamer (inch)

2. **IPM = RPM • IPR**

where:

IPM = inches per minute (in/min)
RPM = revolutions per minute (rev/min)
IPR = feed rate (in/rev)

3. **SFM = RPM • 0.262 • DIA**

where:

SFM = speed (ft/min)
RPM = revolutions per minute (rev/min)
DIA = diameter of reamer (inch)

IMPORTANT: The speeds and feeds listed on these pages are a general starting point for all applications. Factory technical assistance is also available for specific applications through our Application Engineering department. *ext:* **7611** | *email:* **appeng@alliedmachine.com**

Stock Allowance and Coolant | Imperial (inch)

Replaceable Head Style | 7000 Series

ISO	Material	Hardness (BHN)	Coolant	Recommended Stock (inch) by Reamer Diameter* 0.4646" - 0.8504"	0.8505" - 1.5590"	1.5591" - 3.1732"
P	**Free-Machining Steel**	100 - 180	Water Soluble / Cutting Oil	0.006 - 0.010	0.008 - 0.016	0.012 - 0.016
	1118, 1215, 12L14, etc.	180 - 250				
	Low-Carbon Steel	85 - 180				
	1010, 1020, 1025, 1522, 1144, etc.	180 - 275				
	Medium-Carbon Steel	125 - 180				
	1030, 1040, 1050, 1527, 1140, 1151, etc.	180 - 325				
	Alloy Steel	125 - 180				
	4140, 5140, 8640, etc.	180 - 375				
	High-Strength Alloy 4340, 4330V, 300M, etc.	240 - 450				
	Structural Steel	125 - 180				
	A36, A285, A516	180 - 350				
	Tool Steel	150 - 200				
	H-13, H-21, A-4, 0-2, S-3, etc.	200 - 250				
S	**High-Temp Alloy** Hastelloy B, Inconel 600, etc.	140 - 310	Water Soluble / Cutting Oil	0.006 - 0.010	0.008 - 0.016	0.012 - 0.016
	Titanium Alloy	140 - 310				
M	**Stainless Steel 400 Series** 416, 420, etc.	135 - 350	Water Soluble / Cutting Oil	0.006 - 0.010	0.008 - 0.016	0.012 - 0.016
	Stainless Steel 300 Series 304, 316, 17-4PH, etc.	135 - 275				
K	**Grey Cast Iron, Ductile Cast Iron,**	< 200	Water Soluble / Cutting Oil	0.006 - 0.010	0.008 - 0.016	0.012 - 0.016
	Spheroidal Cast Iron (Pearlitic)	> 200				
	Spheroidal Cast Iron (Ferritic)	260 - 320				
N	**Copper and Alloys Brass**	< 500	Water Soluble	0.006 - 0.010	0.008 - 0.016	0.012 - 0.016
	Bronze Bronze Phosphorous	< 180	Water Soluble / Cutting Oil			
	Aluminum and Alloys	< 150	Water Soluble / Cutting Oil			

*Stock value is on diameter.

IMPORTANT: The speeds and feeds listed on these pages are a general starting point for all applications. Factory technical assistance is also available for specific applications through our Application Engineering department. *ext:* **7611** | *email:* **appeng@alliedmachine.com**

Recommended Cutting Data | Imperial (inch)

Replaceable Head Style | 9000 Series

ISO	Material	Hardness (BHN)	Speed (SFM) Uncoated Carbide	Speed (SFM) Coated Carbide	Speed (SFM) Cermet	Recommended Feed (IPR) by Reamer Diameter 0.4646" - 0.8504" Lead A, G	0.4646" - 0.8504" Lead E, N, M	0.8505" - 1.5590" Lead A, G	0.8505" - 1.5590" Lead E, N, M	1.5591" - 1.5984" Lead A, G	1.5591" - 1.5984" Lead E, N, M
P	**Free-Machining Steel**	100 - 180	33 - 66	197 - 262	295 - 984	0.010 - 0.024	0.020 - 0.039	0.012 - 0.031	0.024 - 0.047	0.024 - 0.039	0.028 - 0.059
	1118, 1215, 12L14, etc.	180 - 250	23 - 49	131 - 230	262 - 656	0.012 - 0.024	0.016 - 0.031	0.016 - 0.031	0.020 - 0.039	0.020 - 0.035	0.024 - 0.047
	Low-Carbon Steel	85 - 180	33 - 66	197 - 262	295 - 984	0.010 - 0.024	0.020 - 0.039	0.012 - 0.031	0.024 - 0.047	0.024 - 0.039	0.028 - 0.059
	1010, 1020, 1025, 1522, 1144, etc.	180 - 275	23 - 49	131 - 230	262 - 656	0.012 - 0.024	0.016 - 0.031	0.016 - 0.031	0.020 - 0.039	0.020 - 0.035	0.024 - 0.047
	Medium-Carbon Steel	125 - 180	33 - 66	197 - 262	295 - 984	0.010 - 0.024	0.020 - 0.039	0.012 - 0.031	0.024 - 0.047	0.024 - 0.039	0.028 - 0.059
	1030, 1040, 1050, 1527, 1140, 1151, etc.	180 - 325	23 - 49	131 - 230	262 - 656	0.012 - 0.024	0.016 - 0.031	0.016 - 0.031	0.020 - 0.039	0.020 - 0.035	0.024 - 0.047
	Alloy Steel	125 - 180	20 - 33	131 - 197	164 - 197	0.012 - 0.024	0.016 - 0.031	0.016 - 0.031	0.020 - 0.039	0.020 - 0.035	0.024 - 0.047
	4140, 5140, 8640, etc.	180 - 375	13 - 26	197 - 394	-	0.010 - 0.020	0.012 - 0.024	0.012 - 0.024	0.016 - 0.031	0.016 - 0.028	0.020 - 0.039
	High-Strength Alloy 4340, 4330V, 300M, etc.	240 - 450	13 - 26	197 - 394	-	0.010 - 0.020	0.012 - 0.024	0.012 - 0.024	0.016 - 0.031	0.016 - 0.028	0.020 - 0.039
	Structural Steel	125 - 180	33 - 66	197 - 262	295 - 984	0.010 - 0.024	0.020 - 0.039	0.012 - 0.031	0.024 - 0.047	0.024 - 0.039	0.028 - 0.059
	A36, A285, A516	180 - 350	23 - 49	131 - 230	262 - 656	0.012 - 0.024	0.016 - 0.031	0.016 - 0.031	0.020 - 0.039	0.020 - 0.035	0.024 - 0.047
	Tool Steel	150 - 200	33 - 66	197 - 262	295 - 984	0.010 - 0.024	0.020 - 0.039	0.012 - 0.031	0.024 - 0.047	0.024 - 0.039	0.028 - 0.059
	H-13, H-21, A-4, 0-2, S-3, etc.	200 - 250	23 - 49	131 - 230	262 - 656	0.012 - 0.024	0.016 - 0.031	0.016 - 0.031	0.020 - 0.039	0.020 - 0.035	0.024 - 0.047
S	**High-Temp Alloy** Hastelloy B, Inconel 600, etc.	140 - 310	20 - 33	49 - 98	–	0.008 - 0.016	–	0.012 - 0.020	–	0.016 - 0.024	–
	Titanium Alloy	140 - 310	20 - 33	49 - 98	–	0.008 - 0.016	–	0.012 - 0.020	–	0.016 - 0.024	–
M	**Stainless Steel 400 Series** 416, 420, etc.	135 - 350	20 - 33	131 - 197	164 - 197	0.012 - 0.024	0.016 - 0.031	0.016 - 0.031	0.020 - 0.039	0.020 - 0.035	0.024 - 0.047
	Stainless Steel 300 Series 304, 316, 17-4PH, etc.	135 - 275	20 - 33	131 - 197	164 - 197	0.012 - 0.024	0.016 - 0.031	0.016 - 0.031	0.020 - 0.039	0.020 - 0.035	0.024 - 0.047
K	**Grey Cast Iron, Ductile Cast Iron,**	< 200	66 - 131	394 - 656	–	0.008 - 0.024	0.020 - 0.039	0.012 - 0.028	0.024 - 0.047	0.016 - 0.031	0.031 - 0.063
	Spheroidal Cast Iron (Pearlitic)	> 200	49 - 98	394 - 656	–	0.008 - 0.024	0.020 - 0.039	0.012 - 0.028	0.024 - 0.047	0.016 - 0.031	0.031 - 0.063
	Spheroidal Cast Iron (Ferritic)	260 - 320	33 - 49	-	295 - 459	0.008 - 0.024	0.020 - 0.039	0.012 - 0.028	0.024 - 0.047	0.016 - 0.031	0.031 - 0.063
N	**Copper and Alloys Brass**	< 500	197 - 656	328 - 656	–	0.008 - 0.016	–	0.012 - 0.024	–	0.016 - 0.031	–
	Bronze Bronze Phosphorous	< 180	66 - 131	262 - 525	328 - 984	0.012 - 0.024	0.016 - 0.039	0.012 - 0.024	0.020 - 0.047	0.012 - 0.024	0.024 - 0.059
	Aluminum and Alloys	< 150	66 - 328	–	–	0.012 - 0.024	–	0.016 - 0.039	–	0.016 - 0.039	–

Formulas

1. **RPM = (SFM • 3.82) / DIA**
   where:
   RPM = revolutions per minute (rev/min)
   SFM = speed (ft/min)
   DIA = diameter of reamer (inch)

2. **IPM = RPM • IPR**
   where:
   IPM = inches per minute (in/min)
   RPM = revolutions per minute (rev/min)
   IPR = feed rate (in/rev)

3. **SFM = RPM • 0.262 • DIA**
   where:
   SFM = speed (ft/min)
   RPM = revolutions per minute (rev/min)
   DIA = diameter of reamer (inch)

IMPORTANT: The speeds and feeds listed on these pages are a general starting point for all applications. Factory technical assistance is also available for specific applications through our Application Engineering department. *ext:* **7611** | *email:* **appeng@alliedmachine.com**

Stock Allowance and Coolant | Imperial (inch)

Replaceable Head Style | 9000 Series

ISO	Material	Hardness (BHN)	Coolant	Recommended Stock (inch) by Reamer Diameter* 0.4646" - 0.8504"	0.8505" - 1.5590"	1.5591" - 1.5984"
P	**Free-Machining Steel**	100 - 180	Water Soluble / Cutting Oil	0.006 - 0.010	0.008 - 0.016	0.012 - 0.016
	1118, 1215, 12L14, etc.	180 - 250				
	Low-Carbon Steel	85 - 180				
	1010, 1020, 1025, 1522, 1144, etc.	180 - 275				
	Medium-Carbon Steel	125 - 180				
	1030, 1040, 1050, 1527, 1140, 1151, etc.	180 - 325				
	Alloy Steel	125 - 180				
	4140, 5140, 8640, etc.	180 - 375				
	High-Strength Alloy 4340, 4330V, 300M, etc.	240 - 450				
	Structural Steel	125 - 180				
	A36, A285, A516	180 - 350				
	Tool Steel	150 - 200				
	H-13, H-21, A-4, 0-2, S-3, etc.	200 - 250				
S	**High-Temp Alloy** Hastelloy B, Inconel 600, etc.	140 - 310	Water Soluble / Cutting Oil	0.006 - 0.010	0.008 - 0.016	0.012 - 0.016
	Titanium Alloy	140 - 310				
M	**Stainless Steel 400 Series** 416, 420, etc.	135 - 350	Water Soluble / Cutting Oil	0.006 - 0.010	0.008 - 0.016	0.012 - 0.016
	Stainless Steel 300 Series 304, 316, 17-4PH, etc.	135 - 275				
K	**Grey Cast Iron, Ductile Cast Iron,**	< 200	Water Soluble / Cutting Oil	0.006 - 0.010	0.008 - 0.016	0.012 - 0.016
	Spheroidal Cast Iron (Pearlitic)	> 200				
	Spheroidal Cast Iron (Ferritic)	260 - 320				
N	**Copper and Alloys Brass**	< 500	Water Soluble	0.006 - 0.010	0.008 - 0.016	0.012 - 0.016
	Bronze Bronze Phosphorous	< 180	Water Soluble / Cutting Oil			
	Aluminum and Alloys	< 150	Water Soluble / Cutting Oil			

*Stock value is on diameter.

IMPORTANT: The speeds and feeds listed on these pages are a general starting point for all applications. Factory technical assistance is also available for specific applications through our Application Engineering department. *ext:* **7611** | *email:* **appeng@alliedmachine.com**

Recommended Cutting Data | Imperial (inch)

Replaceable Head Style | 5000 Series

ISO	Material	Hardness (BHN)	Speed (SFM) Uncoated Carbide	Coated Carbide	Coated Cermet	Uncoated Cermet	Recommended Feed (IPR) by Reamer Diameter 0.4646" - 0.8504" Lead A, G	Lead E, N, M	0.8505" - 1.5590" Lead A, G	Lead E, N, M	1.5591" - 1.5984" Lead A, G	Lead E, N, M
P	**Free-Machining Steel**	100-180	49-66	197-262	394-656	394-656	0.012-0.024	0.016-0.031	0.016-0.031	0.020-0.039	0.020-0.035	0.024-0.047
	1118, 1215, 12L14, etc.	180-250	66-131	262-328	394-656	394-656	0.012-0.024	0.016-0.031	0.016-0.031	0.020-0.039	0.020-0.035	0.024-0.047
	Low-Carbon Steel	85-180	49-66	197-262	394-656	394-656	0.012-0.024	0.016-0.031	0.016-0.031	0.020-0.039	0.020-0.035	0.024-0.047
	1010, 1020, 1025, 1522, 1144, etc.	180-275	66-131	262-328	394-656	394-656	0.012-0.024	0.016-0.031	0.016-0.031	0.020-0.039	0.020-0.035	0.024-0.047
	Medium-Carbon Steel	125-180	49-66	197-262	394-656	394-656	0.012-0.024	0.016-0.031	0.016-0.031	0.020-0.039	0.020-0.035	0.024-0.047
	1030, 1040, 1050, 1527, 1140, 1151, etc.	180-325	66-131	262-328	394-656	394-656	0.012-0.024	0.016-0.031	0.016-0.031	0.020-0.039	0.020-0.035	0.024-0.047
	Alloy Steel	125-180	33-49	197-262	-	328-492	0.012-0.024	0.016-0.031	0.016-0.031	0.020-0.039	0.020-0.035	0.024-0.047
	4140, 5140, 8640, etc.	180-375	26-33	197-262	-	-	0.010-0.020	0.012-0.024	0.012-0.024	0.016-0.031	0.016-0.028	0.020-0.039
	High-Strength Alloy 4340, 4330V, 300M, etc.	240-450	26-33	197-262	-	-	0.010-0.020	0.012-0.024	0.012-0.024	0.016-0.031	0.016-0.028	0.020-0.039
	Structural Steel	125-180	49-66	197-262	394-656	394-656	0.012-0.024	0.016-0.031	0.016-0.031	0.020-0.039	0.020-0.035	0.024-0.047
	A36, A285, A516	180-350	66-131	262-328	394-656	394-656	0.012-0.024	0.016-0.031	0.016-0.031	0.020-0.039	0.020-0.035	0.024-0.047
	Tool Steel	150-200	49-66	197-262	394-656	394-656	0.012-0.024	0.016-0.031	0.016-0.031	0.020-0.039	0.020-0.035	0.024-0.047
	H-13, H-21, A-4, 0-2, S-3, etc.	200-250	66-131	262-328	394-656	394-656	0.012-0.024	0.016-0.031	0.016-0.031	0.020-0.039	0.020-0.035	0.024-0.047
S	**High-Temp Alloy** Hastelloy B, Inconel 600, etc.	140-310	16-23	66-98	-	-	0.010-0.020	0.012-0.024	0.012-0.024	0.016-0.031	0.016-0.028	0.020-0.039
	Titanium Alloy	140-310	33-49	-	-	-	0.010-0.020	0.012-0.024	0.012-0.024	0.016-0.031	0.016-0.028	0.020-0.039
M	**Stainless Steel 400 Series** 416, 420, etc.	135-350	26-33	-	-	164-197	0.010-0.020	0.012-0.024	0.012-0.024	0.016-0.031	0.016-0.028	0.020-0.039
	Stainless Steel 300 Series 304, 316, 17-4PH, etc.	135-275	26-33	98-131	-	-	0.010-0.020	0.012-0.024	0.012-0.024	0.016-0.031	0.016-0.028	0.020-0.039
K	**Grey Cast Iron, Ductile Cast Iron,**	< 200	66-98	492-656	-	-	0.012-0.024	0.020-0.039	0.012-0.024	0.024-0.047	0.016-0.031	0.024-0.047
	Spheroidal Cast Iron (Pearlitic)	> 200	49-66	-	328-656	-	0.012-0.024	0.020-0.039	0.012-0.024	0.024-0.047	0.016-0.031	0.024-0.047
	Spheroidal Cast Iron (Ferritic)	260-320	49-66	-	328-394	-	0.012-0.024	0.020-0.039	0.012-0.024	0.024-0.047	0.016-0.031	0.024-0.047
N	**Copper and Alloys** **Brass**	< 500	262-328	328-656	-	-	0.012-0.024	0.016-0.031	0.016-0.031	0.020-0.039	0.020-0.035	0.024-0.047
	Bronze **Bronze Phosphorous**	< 180	131-262	262-525	-	492-656	0.012-0.024	0.016-0.031	0.016-0.031	0.020-0.039	0.020-0.035	0.024-0.047
	Aluminum and Alloys	< 150	328-984	328-984	328-984	328-984	0.012-0.024	0.020-0.039	0.012-0.024	0.024-0.047	0.016-0.031	0.024-0.047

Formulas

1. **RPM = (SFM • 3.82) / DIA**

where:

RPM = revolutions per minute (rev/min)
SFM = speed (ft/min)
DIA = diameter of reamer (inch)

2. **IPM = RPM • IPR**

where:

IPM = inches per minute (in/min)
RPM = revolutions per minute (rev/min)
IPR = feed rate (in/rev)

3. **SFM = RPM • 0.262 • DIA**

where:

SFM = speed (ft/min)
RPM = revolutions per minute (rev/min)
DIA = diameter of reamer (inch)

IMPORTANT: The speeds and feeds listed on these pages are a general starting point for all applications. Factory technical assistance is also available for specific applications through our Application Engineering department. *ext:* **7611** | *email:* **appeng@alliedmachine.com**

Stock Allowance and Coolant | Imperial (inch)

Replaceable Head Style | 5000 Series

ISO	Material	Hardness (BHN)	Coolant	Recommended Stock (inch) by Reamer Diameter* 0.4646" - 0.8504"	0.8505" - 1.5590"	1.5591" - 2.3858"
P	**Free-Machining Steel**	100 - 180	Water Soluble / Cutting Oil	0.006 - 0.010	0.008 - 0.016	0.012 - 0.016
	1118, 1215, 12L14, etc.	180 - 250				
	Low-Carbon Steel	85 - 180				
	1010, 1020, 1025, 1522, 1144, etc.	180 - 275				
	Medium-Carbon Steel	125 - 180				
	1030, 1040, 1050, 1527, 1140, 1151, etc.	180 - 325				
	Alloy Steel	125 - 180				
	4140, 5140, 8640, etc.	180 - 375				
	High-Strength Alloy 4340, 4330V, 300M, etc.	240 - 450				
	Structural Steel	125 - 180				
	A36, A285, A516	180 - 350				
	Tool Steel	150 - 200				
	H-13, H-21, A-4, 0-2, S-3, etc.	200 - 250				
S	**High-Temp Alloy** Hastelloy B, Inconel 600, etc.	140 - 310	Water Soluble / Cutting Oil	0.006 - 0.010	0.008 - 0.016	0.012 - 0.016
	Titanium Alloy	140 - 310				
M	**Stainless Steel 400 Series** 416, 420, etc.	135 - 350	Water Soluble / Cutting Oil	0.006 - 0.010	0.008 - 0.016	0.012 - 0.016
	Stainless Steel 300 Series 304, 316, 17-4PH, etc.	135 - 275				
K	**Grey Cast Iron, Ductile Cast Iron,**	< 200	Water Soluble / Cutting Oil	0.006 - 0.010	0.008 - 0.016	0.012 - 0.016
	Spheroidal Cast Iron (Pearlitic)	> 200				
	Spheroidal Cast Iron (Ferritic)	260 - 320				
N	**Copper and Alloys Brass**	< 500	Water Soluble	0.006 - 0.010	0.008 - 0.016	0.012 - 0.016
	Bronze Bronze Phosphorous	< 180	Water Soluble / Cutting Oil			
	Aluminum and Alloys	< 150	Water Soluble / Cutting Oil			

*Stock value is on diameter.

IMPORTANT: The speeds and feeds listed on these pages are a general starting point for all applications. Factory technical assistance is also available for specific applications through our Application Engineering department. *ext:* **7611** | *email:* **appeng@alliedmachine.com**

Recommended Cutting Data | Imperial (inch)

Monobloc Style

ISO	Material	Hardness (BHN)	Speed (SFM) Uncoated Carbide	Speed (SFM) Coated Carbide	Speed (SFM) Cermet	Recommended Feed (IPR) by Reamer Diameter 0.2283" - 0.3940" Lead A, G	0.2283" - 0.3940" Lead E, N, M	0.3941" - 0.7090" Lead A, G	0.3941" - 0.7090" Lead E, N, M	0.7091" - 1.2638" Lead A, G	0.7091" - 1.2638" Lead E, N, M
P	**Free-Machining Steel**	100 - 180	25 - 50	200 - 260	300 - 980	0.008 - 0.016	0.012 - 0.024	0.016 - 0.024	0.016 - 0.047	0.020 - 0.031	0.024 - 0.047
	1118, 1215, 12L14, etc.	180 - 250	20 - 35	130 - 230	260 - 660	0.008 - 0.016	0.012 - 0.020	0.012 - 0.024	0.012 - 0.031	0.016 - 0.028	0.016 - 0.047
	Low-Carbon Steel	85 - 180	25 - 50	200 - 260	300 - 980	0.008 - 0.016	0.012 - 0.024	0.016 - 0.024	0.016 - 0.047	0.020 - 0.031	0.024 - 0.047
	1010, 1020, 1025, 1522, 1144, etc.	180 - 275	20 - 35	130 - 230	260 - 660	0.008 - 0.016	0.012 - 0.020	0.012 - 0.024	0.012 - 0.031	0.016 - 0.028	0.016 - 0.047
	Medium-Carbon Steel	125 - 180	25 - 50	200 - 260	300 - 980	0.008 - 0.016	0.012 - 0.024	0.016 - 0.024	0.016 - 0.047	0.020 - 0.031	0.024 - 0.047
	1030, 1040, 1050, 1527, 1140, 1151, etc.	180 - 325	20 - 35	130 - 230	260 - 660	0.008 - 0.016	0.012 - 0.020	0.012 - 0.024	0.012 - 0.031	0.016 - 0.028	0.016 - 0.047
	Alloy Steel	125 - 180	20 - 35	130 - 230	260 - 660	0.008 - 0.016	0.012 - 0.024	0.016 - 0.024	0.016 - 0.047	0.020 - 0.031	0.024 - 0.047
	4140, 5140, 8640, etc.	180 - 375	15 - 25	100 - 160	200 - 490	0.008 - 0.016	0.012 - 0.020	0.012 - 0.024	0.012 - 0.031	0.016 - 0.028	0.016 - 0.047
	High-Strength Alloy 4340, 4330V, 300M, etc.	240 - 450	10 - 20	50 - 100	200 - 390	0.006 - 0.012	0.008 - 0.016	0.008 - 0.020	0.012 - 0.024	0.012 - 0.024	0.016 - 0.031
	Structural Steel	125 - 180	25 - 50	200 - 260	300 - 980	0.008 - 0.016	0.012 - 0.024	0.016 - 0.024	0.016 - 0.047	0.020 - 0.031	0.024 - 0.047
	A36, A285, A516	180 - 350	20 - 35	130 - 230	260 - 660	0.008 - 0.016	0.012 - 0.020	0.012 - 0.024	0.012 - 0.031	0.016 - 0.028	.0016 - 0.047
	Tool Steel	150 - 200	25 - 50	200 - 260	300 - 980	0.008 - 0.016	0.012 - 0.024	0.016 - 0.024	0.016 - 0.047	0.020 - 0.031	0.024 - 0.047
	H-13, H-21, A-4, 0-2, S-3, etc.	200 - 250	20 - 35	130 - 230	260 - 660	0.008 - 0.016	0.012 - 0.020	0.012 - 0.024	0.012 - 0.031	0.016 - 0.028	0.016 - 0.047
S	**High-Temp Alloy** Hastelloy B, Inconel 600, etc.	140 - 310	15 - 25	60 - 200	–	0.006 - 0.012	–	0.008 - 0.016	–	0.012 - 0.020	–
	Titanium Alloy	140 - 310	15 - 25	60 - 200	–	0.006 - 0.012	–	0.008 - 0.016	–	0.012 - 0.020	–
M	**Stainless Steel 400 Series** 416, 420, etc.	135 - 350	15 - 25	100 - 160	200 - 490	0.008 - 0.016	0.012 - 0.020	0.012 - 0.024	0.012 - 0.031	0.016 - 0.028	0.016 - 0.047
	Stainless Steel 300 Series 304, 316, 17-4PH, etc.	135 - 275	15 - 25	100 - 160	200 - 490	0.008 - 0.016	0.012 - 0.020	0.012 - 0.024	0.012 - 0.031	0.016 - 0.028	0.016 - 0.047
K	**Grey Cast Iron, Ductile Cast Iron,**	< 200	50 - 100	160 - 230	–	0.008 - 0.016	0.012 - 0.024	0.014 - 0.024	0.020 - 0.031	0.016 - 0.047	0.024 - 0.059
	Spheroidal Cast Iron (Pearlitic)	> 200	35 - 65	160 - 230	–	0.008 - 0.016	0.012 - 0.024	0.014 - 0.024	0.020 - 0.031	0.016 - 0.047	0.024 - 0.059
	Spheroidal Cast Iron (Ferritic)	260 - 320	25 - 40	100 - 160	200 - 400	0.008 - 0.016	0.012 - 0.024	0.014 - 0.024	0.020 - 0.031	0.016 - 0.047	0.024 - 0.059
N	**Copper and Alloys Brass**	< 500	35 - 60	330 - 660	–	0.008 - 0.016	–	0.016 - 0.028	–	0.020 - 0.031	–
	Bronze Bronze Phosphorous	< 180	35 - 65	260 - 520	330 - 980	0.006 - 0.012	–	0.008 - 0.016	–	0.012 - 0.024	–
	Aluminum and Alloys	< 150	50 - 100	330 - 660	–	0.008 - 0.016	–	0.016 - 0.028	–	0.020 - 0.031	–

Formulas

1. **RPM = (SFM • 3.82) / DIA**

where:

RPM	= revolutions per minute (rev/min)
SFM	= speed (ft/min)
DIA	= diameter of reamer (inch)

2. **IPM = RPM • IPR**

where:

IPM	= inches per minute (in/min)
RPM	= revolutions per minute (rev/min)
IPR	= feed rate (in/rev)

3. **SFM = RPM • 0.262 • DIA**

where:

SFM	= speed (ft/min)
RPM	= revolutions per minute (rev/min)
DIA	= diameter of reamer (inch)

IMPORTANT: The speeds and feeds listed on these pages are a general starting point for all applications. Factory technical assistance is also available for specific applications through our Application Engineering department. *ext:* **7611** | *email:* **appeng@alliedmachine.com**

Stock Allowance and Coolant | Imperial (inch)

Monobloc Style

ISO	Material	Hardness (BHN)	Coolant	Recommended Stock (inch) by Reamer Diameter* 0.2283" - 0.3940"	0.3941" - 0.7090"	0.7091" - 1.2638"
P	**Free-Machining Steel**	100 - 180	Water Soluble / Cutting Oil	0.006 - 0.012	0.008 - 0.016	0.010 - 0.020
	1118, 1215, 12L14, etc.	180 - 250				
	Low-Carbon Steel	85 - 180				
	1010, 1020, 1025, 1522, 1144, etc.	180 - 275				
	Medium-Carbon Steel	125 - 180				
	1030, 1040, 1050, 1527, 1140, 1151, etc.	180 - 325				
	Alloy Steel	125 - 180				
	4140, 5140, 8640, etc.	180 - 375				
	High-Strength Alloy 4340, 4330V, 300M, etc.	240 - 450				
	Structural Steel	125 - 180				
	A36, A285, A516	180 - 350				
	Tool Steel	150 - 200				
	H-13, H-21, A-4, 0-2, S-3, etc.	200 - 250				
S	**High-Temp Alloy** Hastelloy B, Inconel 600, etc.	140 - 310	Water Soluble / Cutting Oil	0.008 - 0.016	0.012 - 0.016	0.012 - 0.020
	Titanium Alloy	140 - 310				
M	**Stainless Steel 400 Series** 416, 420, etc.	135 - 350	Water Soluble / Cutting Oil	0.006 - 0.012	0.008 - 0.016	0.010 - 0.020
	Stainless Steel 300 Series 304, 316, 17-4PH, etc.	135 - 275				
K	**Grey Cast Iron, Ductile Cast Iron, Spheroidal Cast Iron (Pearlitic)**	< 200	Water Soluble / Cutting Oil	0.006 - 0.012	0.008 - 0.016	0.010 - 0.020
		> 200				
	Spheroidal Cast Iron (Ferritic)	260 - 320				
N	**Copper and Alloys Brass**	< 500	Water Soluble	0.006 - 0.012	0.008 - 0.016	0.010 - 0.020
	Bronze Bronze Phosphorous	< 180	Water Soluble / Cutting Oil			
	Aluminum and Alloys	< 150	Water Soluble / Cutting Oil			

*Stock value is on diameter.

IMPORTANT: The speeds and feeds listed on these pages are a general starting point for all applications. Factory technical assistance is also available for specific applications through our Application Engineering department. *ext:* **7611** | *email:* **appeng@alliedmachine.com**

Recommended Cutting Data | Imperial (inch)

Cutting Ring Style

ISO	Material	Hardness (BHN)	Speed (SFM) Uncoated Carbide	Speed (SFM) Coated Carbide	Speed (SFM) Cermet	Recommended Feed (IPR) by Reamer Diameter 0.6929" - 1.5750" Lead A, G	0.6929" - 1.5750" Lead E, N, M	1.5751" - 3.1500" Lead A, G	1.5751" - 3.1500" Lead E, N, M	3.1501" - 7.8972" Lead A, G	3.1501" - 7.8972" Lead E, N, M
P	**Free-Machining Steel**	100 - 180	25 - 50	200 - 260	300 - 980	0.020 - 0.031	0.024 - 0.047	0.020 - 0.039	0.031 - 0.063	0.031 - 0.059	0.039 - 0.087
	1118, 1215, 12L14, etc.	180 - 250	20 - 35	130 - 230	260 - 660	0.016 - 0.028	0.016 - 0.039	0.020 - 0.031	0.024 - 0.055	0.031 - 0.047	0.039 - 0.079
	Low-Carbon Steel	85 - 180	25 - 50	200 - 260	300 - 980	0.020 - 0.031	0.024 - 0.047	0.020 - 0.039	0.031 - 0.063	0.031 - 0.059	0.039 - 0.087
	1010, 1020, 1025, 1522, 1144, etc.	180 - 275	20 - 35	130 - 230	260 - 660	0.016 - 0.028	0.016 - 0.039	0.020 - 0.031	0.024 - 0.055	0.031 - 0.047	0.039 - 0.079
	Medium-Carbon Steel	125 - 180	25 - 50	200 - 260	300 - 980	0.020 - 0.031	0.024 - 0.047	0.020 - 0.039	0.031 - 0.063	0.031 - 0.059	0.039 - 0.087
	1030, 1040, 1050, 1527, 1140, 1151, etc.	180 - 325	20 - 35	130 - 230	260 - 660	0.016 - 0.028	0.016 - 0.039	0.020 - 0.031	0.024 - 0.055	0.031 - 0.047	0.039 - 0.079
	Alloy Steel	125 - 180	20 - 35	130 - 230	260 - 660	0.020 - 0.031	0.024 - 0.047	0.020 - 0.039	0.031 - 0.063	0.031 - 0.059	0.039 - 0.087
	4140, 5140, 8640, etc.	180 - 375	15 - 25	100 - 160	200 - 490	0.016 - 0.028	0.016 - 0.039	0.020 - 0.031	0.024 - 0.055	0.031 - 0.047	0.039 - 0.079
	High-Strength Alloy 4340, 4330V, 300M, etc.	240 - 450	10 - 20	50 - 100	200 - 390	0.012 - 0.024	0.016 - 0.031	0.016 - 0.031	0.020 - 0.039	0.024 - 0.039	0.028 - 0.055
	Structural Steel	125 - 180	25 - 50	200 - 260	300 - 980	0.020 - 0.031	0.024 - 0.047	0.020 - 0.039	0.031 - 0.063	0.031 - 0.059	0.039 - 0.087
	A36, A285, A516	180 - 350	20 - 35	130 - 230	260 - 660	0.016 - 0.028	0.016 - 0.039	0.020 - 0.031	0.024 - 0.055	0.031 - 0.047	0.039 - 0.079
	Tool Steel	150 - 200	25 - 50	200 - 260	300 - 980	0.020 - 0.031	0.024 - 0.047	0.020 - 0.039	0.031 - 0.063	0.031 - 0.059	0.039 - 0.087
	H-13, H-21, A-4, 0-2, S-3, etc.	200 - 250	20 - 35	130 - 230	260 - 660	0.016 - 0.028	0.016 - 0.039	0.020 - 0.031	0.024 - 0.055	0.031 - 0.047	0.039 - 0.079
S	**High-Temp Alloy** Hastelloy B, Inconel 600, etc.	140 - 310	15 - 25	60 - 200	–	0.012 - 0.020	–	0.016 - 0.024	–	0.020 - 0.028	–
	Titanium Alloy	140 - 310	15 - 25	60 - 200	–	0.012 - 0.020	–	0.016 - 0.024	–	0.020 - 0.028	–
M	**Stainless Steel 400 Series** 416, 420, etc.	135 - 350	15 - 25	100 - 160	200 - 490	0.016 - 0.028	0.016 - 0.039	0.020 - 0.031	0.024 - 0.055	0.031 - 0.047	0.039 - 0.079
	Stainless Steel 300 Series 304, 316, 17-4PH, etc.	135 - 275	15 - 25	100 - 160	200 - 490	0.016 - 0.028	0.016 - 0.039	0.020 - 0.031	0.024 - 0.055	0.031 - 0.047	0.039 - 0.079
K	**Grey Cast Iron, Ductile Cast Iron,**	< 200	50 - 100	160 - 230	–	0.016 - 0.039	0.024 - 0.059	0.024 - 0.051	0.031 - 0.063	0.031 - 0.067	0.039 - 0.088
	Spheroidal Cast Iron (Pearlitic)	> 200	35 - 65	160 - 230	–	0.016 - 0.039	0.024 - 0.059	0.024 - 0.051	0.031 - 0.063	0.031 - 0.067	0.039 - 0.088
	Spheroidal Cast Iron (Ferritic)	260 - 320	25 - 40	100 - 160	200 - 400	0.016 - 0.039	0.024 - 0.059	0.024 - 0.051	0.031 - 0.063	0.031 - 0.067	0.039 - 0.088
N	**Copper and Alloys Brass**	< 500	35 - 60	330 - 660	–	0.020 - 0.031	–	0.024 - 0.039	–	0.031 - 0.055	–
	Bronze Bronze Phosphorous	< 180	35 - 65	260 - 520	330 - 980	0.012 - 0.024	–	0.016 - 0.031	–	0.024 - 0.039	–
	Aluminum and Alloys	< 150	50 - 100	330 - 660	–	0.020 - 0.031	–	0.024 - 0.039	–	0.031 - 0.055	–

Formulas

1. **RPM = (SFM • 3.82) / DIA**
   where:
   RPM = revolutions per minute (rev/min)
   SFM = speed (ft/min)
   DIA = diameter of reamer (inch)

2. **IPM = RPM • IPR**
   where:
   IPM = inches per minute (in/min)
   RPM = revolutions per minute (rev/min)
   IPR = feed rate (in/rev)

3. **SFM = RPM • 0.262 • DIA**
   where:
   SFM = speed (ft/min)
   RPM = revolutions per minute (rev/min)
   DIA = diameter of reamer (inch)

IMPORTANT: The speeds and feeds listed on these pages are a general starting point for all applications. Factory technical assistance is also available for specific applications through our Application Engineering department. *ext:* **7611** | *email:* **appeng@alliedmachine.com**

Stock Allowance and Coolant | Imperial (inch)

Cutting Ring Style

ISO	Material	Hardness (BHN)	Coolant	Recommended Stock (inch) by Reamer Diameter* 0.6929" - 1.5750"	1.5751" - 3.1500"	3.1501" - 7.8972"
P	**Free-Machining Steel**	100 - 180	Water Soluble / Cutting Oil	0.006 - 0.012	0.008 - 0.016	0.010 - 0.020
	1118, 1215, 12L14, etc.	180 - 250				
	Low-Carbon Steel	85 - 180				
	1010, 1020, 1025, 1522, 1144, etc.	180 - 275				
	Medium-Carbon Steel	125 - 180				
	1030, 1040, 1050, 1527, 1140, 1151, etc.	180 - 325				
	Alloy Steel	125 - 180				
	4140, 5140, 8640, etc.	180 - 375				
	High-Strength Alloy 4340, 4330V, 300M, etc.	240 - 450				
	Structural Steel	125 - 180				
	A36, A285, A516	180 - 350				
	Tool Steel	150 - 200				
	H-13, H-21, A-4, 0-2, S-3, etc.	200 - 250				
S	**High-Temp Alloy** Hastelloy B, Inconel 600, etc.	140 - 310	Water Soluble / Cutting Oil	0.008 - 0.016	0.012 - 0.016	0.012 - 0.020
	Titanium Alloy	140 - 310				
M	**Stainless Steel 400 Series** 416, 420, etc.	135 - 350	Water Soluble / Cutting Oil	0.006 - 0.012	0.008 - 0.016	0.010 - 0.020
	Stainless Steel 300 Series 304, 316, 17-4PH, etc.	135 - 275				
K	**Grey Cast Iron, Ductile Cast Iron, Spheroidal Cast Iron (Pearlitic)**	< 200	Water Soluble / Cutting Oil	0.006 - 0.012	0.008 - 0.016	0.010 - 0.020
		> 200				
	Spheroidal Cast Iron (Ferritic)	260 - 320				
N	**Copper and Alloys Brass**	< 500	Water Soluble	0.006 - 0.012	0.008 - 0.016	0.010 - 0.020
	Bronze Bronze Phosphorous	< 180	Water Soluble / Cutting Oil			
	Aluminum and Alloys	< 150	Water Soluble / Cutting Oil			

*Stock value is on diameter.

IMPORTANT: The speeds and feeds listed on these pages are a general starting point for all applications. Factory technical assistance is also available for specific applications through our Application Engineering department. *ext:* **7611** | *email:* **appeng@alliedmachine.com**

Recommended Cutting Data | Metric (mm)

Replaceable Head Style | 7000 Series

ISO	Material	Hardness (BHN)	Speed (m/min)			Recommended Feed (mm/rev) by Reamer Diameter					
						11.80 mm - 21.60 mm		21.61 mm - 39.60 mm		39.61 mm - 80.60 mm	
			Uncoated Carbide	Coated Carbide	Cermet	Lead A, G	Lead E, N, M	Lead A, G	Lead E, N, M	Lead A, G	Lead E, N, M
P	**Free-Machining Steel**	100 - 180	10 - 20	60 - 80	90 - 300	0.25 - 0.60	0.50 - 1.00	0.30 - 0.80	0.60 - 1.20	0.60 - 1.00	0.70 - 1.50
	1118, 1215, 12L14, etc.	180 - 250	7 - 15	40 - 70	80 - 200	0.30 - 0.60	0.40 - 0.80	0.40 - 0.80	0.50 - 1.00	0.50 - 0.90	0.60 - 1.20
	Low-Carbon Steel	85 - 180	10 - 20	60 - 80	90 - 300	0.25 - 0.60	0.50 - 1.00	0.30 - 0.80	0.60 - 1.20	0.60 - 1.00	0.70 - 1.50
	1010, 1020, 1025, 1522, 1144, etc.	180 - 275	7 - 15	40 - 70	80 - 200	0.30 - 0.60	0.40 - 0.80	0.40 - 0.80	0.50 - 1.00	0.50 - 0.90	0.60 - 1.20
	Medium-Carbon Steel	125 - 180	10 - 20	60 - 80	90 - 300	0.25 - 0.60	0.50 - 1.00	0.30 - 0.80	0.60 - 1.20	0.60 - 1.00	0.70 - 1.50
	1030, 1040, 1050, 1527, 1140, 1151, etc.	180 - 325	7 - 15	40 - 70	80 - 200	0.30 - 0.60	0.40 - 0.80	0.40 - 0.80	0.50 - 1.00	0.50 - 0.90	0.60 - 1.20
	Alloy Steel	125 - 180	6 - 10	40 - 60	50 - 60	0.30 - 0.60	0.40 - 0.80	0.40 - 0.80	0.50 - 1.00	0.50 - 0.90	0.60 - 1.20
	4140, 5140, 8640, etc.	180 - 375	4 - 8	40 - 50	60 - 120	0.25 - 0.50	0.30 - 0.60	0.30 - 0.60	0.40 - 0.80	0.40 - 0.70	0.50 - 1.00
	High-Strength Alloy 4340, 4330V, 300M, etc.	240 - 450	4 - 8	40 - 50	60 - 120	0.25 - 0.50	0.30 - 0.60	0.30 - 0.60	0.40 - 0.80	0.40 - 0.70	0.50 - 1.00
	Structural Steel	125 - 180	10 - 20	60 - 80	90 - 300	0.25 - 0.60	0.50 - 1.00	0.30 - 0.80	0.60 - 1.20	0.60 - 1.00	0.70 - 1.50
	A36, A285, A516	180 - 350	7 - 15	40 - 70	80 - 200	0.30 - 0.60	0.40 - 0.80	0.40 - 0.80	0.50 - 1.00	0.50 - 0.90	0.60 - 1.20
	Tool Steel	150 - 200	10 - 20	60 - 80	90 - 300	0.25 - 0.60	0.50 - 1.00	0.30 - 0.80	0.60 - 1.20	0.60 - 1.00	0.70 - 1.50
	H-13, H-21, A-4, 0-2, S-3, etc.	200 - 250	7 - 15	40 - 70	80 - 200	0.30 - 0.60	0.40 - 0.80	0.40 - 0.80	0.50 - 1.00	0.50 - 0.90	0.60 - 1.20
S	**High-Temp Alloy** Hastelloy B, Inconel 600, etc.	140 - 310	4 - 10	30 - 50	–	0.20 - 0.40	–	0.30 - 0.50	–	0.40 - 0.60	–
	Titanium Alloy	140 - 310	4 - 15	30 - 50	–	0.20 - 0.40	–	0.30 - 0.50	–	0.40 - 0.60	–
M	**Stainless Steel 400 Series** 416, 420, etc.	135 - 350	6 - 10	40 - 60	50 - 60	0.30 - 0.60	0.40 - 0.80	0.40 - 0.80	0.50 - 1.00	0.50 - 0.90	0.60 - 1.20
	Stainless Steel 300 Series 304, 316, 17-4PH, etc.	135 - 275	6 - 10	40 - 60	50 - 60	0.30 - 0.60	0.40 - 0.80	0.40 - 0.80	0.50 - 1.00	0.50 - 0.90	0.60 - 1.20
K	**Grey Cast Iron, Ductile Cast Iron,**	< 200	20 - 40	120 - 200	–	0.20 - 0.60	0.50 - 1.00	0.30 - 0.70	0.60 - 1.20	0.40 - 0.80	0.80 - 1.60
	Spheroidal Cast Iron (Pearlitic)	> 200	15 - 30	120 - 200	–	0.20 - 0.60	0.50 - 1.00	0.30 - 0.70	0.60 - 1.20	0.40 - 0.80	0.80 - 1.60
	Spheroidal Cast Iron (Ferritic)	260 - 320	10 - 15	-	90 - 140	0.20 - 0.60	0.50 - 0.60	0.30 - 0.70	0.60 - 1.20	0.40 - 0.80	0.80 - 1.60
N	**Copper and Alloys Brass**	< 500	60 - 200	100 - 200	–	0.20 - 0.40	–	0.30 - 0.60	–	0.40 - 0.80	–
	Bronze Bronze Phosphorous	< 180	20 - 40	80 - 160	100 - 300	0.30 - 0.60	0.40 - 1.00	0.30 - 0.60	0.50 - 1.20	0.30 - 0.60	0.60 - 1.50
	Aluminum and Alloys	< 150	20 - 100	–	–	0.30 - 0.60	–	0.40 - 1.00	–	0.40 - 1.00	–

Formulas

1. **RPM = m/min • 3.82 • DIA**
   where:
   RPM = revolutions per minute (rev/min)
   m/min = speed (m/min)
   DIA = diameter of reamer (mm)

2. **mm/min = RPM • mm/rev**
   where:
   mm/min = mm per minute (mm/min)
   RPM = revolutions per minute (rev/min)
   mm/rev = feed rate (mm/rev)

3. **m/min = RPM • 0.003 • DIA**
   where:
   m/min = speed (m/min)
   RPM = revolutions per minute (rev/min)
   DIA = diameter of reamer (mm)

IMPORTANT: The speeds and feeds listed on these pages are a general starting point for all applications. Factory technical assistance is also available for specific applications through our Application Engineering department. *ext:* **7611** | *email:* **appeng@alliedmachine.com**

Stock Allowance and Coolant | Metric (mm)

Replaceable Head Style | 7000 Series

ISO	Material	Hardness (BHN)	Coolant	Recommended Stock (mm) by Reamer Diameter* 11.80 mm - 21.60 mm	21.61 mm - 39.60 mm	39.61 mm - 80.60 mm
P	**Free-Machining Steel**	100 - 180	Water Soluble / Cutting Oil	0.15 - 0.25	0.20 - 0.40	0.30 - 0.40
	1118, 1215, 12L14, etc.	180 - 250				
	Low-Carbon Steel	85 - 180				
	1010, 1020, 1025, 1522, 1144, etc.	180 - 275				
	Medium-Carbon Steel	125 - 180				
	1030, 1040, 1050, 1527, 1140, 1151, etc.	180 - 325				
	Alloy Steel	125 - 180				
	4140, 5140, 8640, etc.	180 - 375				
	High-Strength Alloy 4340, 4330V, 300M, etc.	240 - 450				
	Structural Steel	125 - 180				
	A36, A285, A516	180 - 350				
	Tool Steel	150 - 200				
	H-13, H-21, A-4, 0-2, S-3, etc.	200 - 250				
S	**High-Temp Alloy** Hastelloy B, Inconel 600, etc.	140 - 310	Water Soluble / Cutting Oil	0.15 - 0.25	0.20 - 0.40	0.30 - 0.40
	Titanium Alloy	140 - 310				
M	**Stainless Steel 400 Series** 416, 420, etc.	135 - 350	Water Soluble / Cutting Oil	0.15 - 0.25	0.20 - 0.40	0.30 - 0.40
	Stainless Steel 300 Series 304, 316, 17-4PH, etc.	135 - 275				
K	**Grey Cast Iron, Ductile Cast Iron,**	< 200	Water Soluble / Cutting Oil	0.15 - 0.25	0.20 - 0.40	0.30 - 0.40
	Spheroidal Cast Iron (Pearlitic)	> 200				
	Spheroidal Cast Iron (Ferritic)	260 - 320				
N	**Copper and Alloys Brass**	< 500	Water Soluble	0.15 - 0.25	0.20 - 0.40	0.30 - 0.40
	Bronze Bronze Phosphorous	< 180	Water Soluble / Cutting Oil			
	Aluminum and Alloys	< 150	Water Soluble / Cutting Oil			

*Stock value is on diameter.

IMPORTANT: The speeds and feeds listed on these pages are a general starting point for all applications. Factory technical assistance is also available for specific applications through our Application Engineering department. *ext:* **7611** | *email:* **appeng@alliedmachine.com**

Recommended Cutting Data | Metric (mm)

Replaceable Head Style | 9000 Series

ISO	Material	Hardness (BHN)	Speed (m/min) Uncoated Carbide	Speed (m/min) Coated Carbide	Speed (m/min) Cermet	Recommended Feed (mm/rev) by Reamer Diameter 11.80 mm - 21.60 mm Lead A, G	11.80 mm - 21.60 mm Lead E, N, M	21.61 mm - 39.60 mm Lead A, G	21.61 mm - 39.60 mm Lead E, N, M	39.61 mm - 40.60 mm Lead A, G	39.61 mm - 40.60 mm Lead E, N, M
P	**Free-Machining Steel**	100 - 180	10 - 20	60 - 80	90 - 300	0.25 - 0.60	0.50 - 1.00	0.30 - 0.80	0.60 - 1.20	0.60 - 1.00	0.70 - 1.50
	1118, 1215, 12L14, etc.	180 - 250	7 - 15	40 - 70	80 - 200	0.30 - 0.60	0.40 - 0.80	0.40 - 0.80	0.50 - 1.00	0.50 - 0.90	0.60 - 1.20
	Low-Carbon Steel	85 - 180	10 - 20	60 - 80	90 - 300	0.25 - 0.60	0.50 - 1.00	0.30 - 0.80	0.60 - 1.20	0.60 - 1.00	0.70 - 1.50
	1010, 1020, 1025, 1522, 1144, etc.	180 - 275	7 - 15	40 - 70	80 - 200	0.30 - 0.60	0.40 - 0.80	0.40 - 0.80	0.50 - 1.00	0.50 - 0.90	0.60 - 1.20
	Medium-Carbon Steel	125 - 180	10 - 20	60 - 80	90 - 300	0.25 - 0.60	0.50 - 1.00	0.30 - 0.80	0.60 - 1.20	0.60 - 1.00	0.70 - 1.50
	1030, 1040, 1050, 1527, 1140, 1151, etc.	180 - 325	7 - 15	40 - 70	80 - 200	0.30 - 0.60	0.40 - 0.80	0.40 - 0.80	0.50 - 1.00	0.50 - 0.90	0.60 - 1.20
	Alloy Steel	125 - 180	6 - 10	40 - 60	50 - 60	0.30 - 0.60	0.40 - 0.80	0.40 - 0.80	0.50 - 1.00	0.50 - 0.90	0.60 - 1.20
	4140, 5140, 8640, etc.	180 - 375	4 - 8	60 - 120	-	0.25 - 0.50	0.30 - 0.60	0.30 - 0.60	0.40 - 0.80	0.40 - 0.70	0.50 - 1.00
	High-Strength Alloy 4340, 4330V, 300M, etc.	240 - 450	4 - 8	60 - 120	-	0.25 - 0.50	0.30 - 0.60	0.30 - 0.60	0.40 - 0.80	0.40 - 0.70	0.50 - 1.00
	Structural Steel	125 - 180	10 - 20	60 - 80	90 - 300	0.25 - 0.60	0.50 - 1.00	0.30 - 0.80	0.60 - 1.20	0.60 - 1.00	0.70 - 1.50
	A36, A285, A516	180 - 350	7 - 15	40 - 70	80 - 200	0.30 - 0.60	0.40 - 0.80	0.40 - 0.80	0.50 - 1.00	0.50 - 0.90	0.60 - 1.20
	Tool Steel	150 - 200	10 - 20	60 - 80	90 - 300	0.25 - 0.60	0.50 - 1.00	0.30 - 0.80	0.60 - 1.20	0.60 - 1.00	0.70 - 1.50
	H-13, H-21, A-4, 0-2, S-3, etc.	200 - 250	7 - 15	40 - 70	80 - 200	0.30 - 0.60	0.40 - 0.80	0.40 - 0.80	0.50 - 1.00	0.50 - 0.90	0.60 - 1.20
S	**High-Temp Alloy** Hastelloy B, Inconel 600, etc.	140 - 310	6 - 10	15 - 30	–	0.20 - 0.40	–	0.30 - 0.50	–	0.40 - 0.60	–
	Titanium Alloy	140 - 310	6 - 10	15 - 30	–	0.20 - 0.40	–	0.30 - 0.50	–	0.40 - 0.60	–
M	**Stainless Steel 400 Series** 416, 420, etc.	135 - 350	6 - 10	40 - 60	50 - 60	0.30 - 0.60	0.40 - 0.80	0.40 - 0.80	0.50 - 1.00	0.50 - 0.90	0.60 - 1.20
	Stainless Steel 300 Series 304, 316, 17-4PH, etc.	135 - 275	6 - 10	40 - 60	50 - 60	0.30 - 0.60	0.40 - 0.80	0.40 - 0.80	0.50 - 1.00	0.50 - 0.90	0.60 - 1.20
K	**Grey Cast Iron, Ductile Cast Iron,**	< 200	20 - 40	120 - 200	–	0.20 - 0.60	0.50 - 1.00	0.30 - 0.70	0.60 - 1.20	0.40 - 0.80	0.80 - 1.60
	Spheroidal Cast Iron (Pearlitic)	> 200	15 - 30	120 - 200	–	0.20 - 0.60	0.50 - 1.00	0.30 - 0.70	0.60 - 1.20	0.40 - 0.80	0.80 - 1.60
	Spheroidal Cast Iron (Ferritic)	260 - 320	10 - 15	-	90 - 140	0.20 - 0.60	0.50 - 1.00	0.30 - 0.70	0.60 - 1.20	0.40 - 0.80	0.80 - 1.60
N	**Copper and Alloys Brass**	< 500	60 - 200	100 - 200	–	0.20 - 0.40	–	0.30 - 0.60	–	0.40 - 0.80	–
	Bronze Bronze Phosphorous	< 180	20 - 40	80 - 160	100 - 300	0.30 - 0.60	0.40 - 1.00	0.30 - 0.60	0.50 - 1.20	0.30 - 0.60	0.60 - 1.50
	Aluminum and Alloys	< 150	20 - 100	–	–	0.30 - 0.60	–	0.40 - 1.00	–	0.40 - 1.00	–

Formulas

1. **RPM = m/min • 3.82 • DIA**
   where:
   RPM = revolutions per minute (rev/min)
   m/min = speed (m/min)
   DIA = diameter of reamer (mm)

2. **mm/min = RPM • mm/rev**
   where:
   mm/min = mm per minute (mm/min)
   RPM = revolutions per minute (rev/min)
   mm/rev = feed rate (mm/rev)

3. **m/min = RPM • 0.003 • DIA**
   where:
   m/min = speed (m/min)
   RPM = revolutions per minute (rev/min)
   DIA = diameter of reamer (mm)

IMPORTANT: The speeds and feeds listed on these pages are a general starting point for all applications. Factory technical assistance is also available for specific applications through our Application Engineering department. *ext:* **7611** | *email:* **appeng@alliedmachine.com**

Stock Allowance and Coolant | Metric (mm)

Replaceable Head Style | 9000 Series

ISO	Material	Hardness (BHN)	Coolant	Recommended Stock (mm) by Reamer Diameter* 11.80 mm - 21.60 mm	21.61 mm - 39.60 mm	39.61 mm - 40.60 mm
P	**Free-Machining Steel**	100 - 180	Water Soluble / Cutting Oil	0.15 - 0.25	0.20 - 0.40	0.30 - 0.40
	1118, 1215, 12L14, etc.	180 - 250				
	Low-Carbon Steel	85 - 180				
	1010, 1020, 1025, 1522, 1144, etc.	180 - 275				
	Medium-Carbon Steel	125 - 180				
	1030, 1040, 1050, 1527, 1140, 1151, etc.	180 - 325				
	Alloy Steel	125 - 180				
	4140, 5140, 8640, etc.	180 - 375				
	High-Strength Alloy 4340, 4330V, 300M, etc.	240 - 450				
	Structural Steel	125 - 180				
	A36, A285, A516	180 - 350				
	Tool Steel	150 - 200				
	H-13, H-21, A-4, 0-2, S-3, etc.	200 - 250				
S	**High-Temp Alloy** Hastelloy B, Inconel 600, etc.	140 - 310	Water Soluble / Cutting Oil	0.15 - 0.25	0.20 - 0.40	0.30 - 0.40
	Titanium Alloy	140 - 310				
M	**Stainless Steel 400 Series** 416, 420, etc.	135 - 350	Water Soluble / Cutting Oil	0.15 - 0.25	0.20 - 0.40	0.30 - 0.40
	Stainless Steel 300 Series 304, 316, 17-4PH, etc.	135 - 275				
K	**Grey Cast Iron, Ductile Cast Iron,**	< 200	Water Soluble / Cutting Oil	0.15 - 0.25	0.20 - 0.40	0.30 - 0.40
	Spheroidal Cast Iron (Pearlitic)	> 200				
	Spheroidal Cast Iron (Ferritic)	260 - 320				
N	**Copper and Alloys Brass**	< 500	Water Soluble	0.15 - 0.25	0.20 - 0.40	0.30 - 0.40
	Bronze Bronze Phosphorous	< 180	Water Soluble / Cutting Oil			
	Aluminum and Alloys	< 150	Water Soluble / Cutting Oil			

*Stock value is on diameter.

IMPORTANT: The speeds and feeds listed on these pages are a general starting point for all applications. Factory technical assistance is also available for specific applications through our Application Engineering department. *ext:* **7611** | *email:* **appeng@alliedmachine.com**

Recommended Cutting Data | Metric (mm)

Replaceable Head Style | 5000 Series

ISO	Material	Hardness (BHN)	Speed (m/min)				Recommended Feed (mm/rev) by Reamer Diameter					
							9.61 mm - 17.60 mm		17.61 mm - 26.60 mm		26.61 mm - 32.60 mm	
			Uncoated Carbide	Coated Carbide	Coated Cermet	Uncoated Cermet	Lead A, G	Lead E, N, M	Lead A, G	Lead E, N, M	Lead A, G	Lead E, N, M
P	**Free-Machining Steel**	100-180	15 - 20	60 - 80	120 - 200	120 - 200	0.30 - 0.60	0.40 - 0.80	0.40 - 0.80	0.50 - 1.00	0.50 - 0.90	0.60 - 1.20
	1118, 1215, 12L14, etc.	180-250	20 - 40	80 - 100	120 - 200	120 - 200	0.30 - 0.60	0.40 - 0.80	0.40 - 0.80	0.50 - 1.00	0.50 - 0.90	0.60 - 1.20
	Low-Carbon Steel	85-180	15 - 20	60 - 80	120 - 200	120 - 200	0.30 - 0.60	0.40 - 0.80	0.40 - 0.80	0.50 - 1.00	0.50 - 0.90	0.60 - 1.20
	1010, 1020, 1025, 1522, 1144, etc.	180-275	20 - 40	80 - 100	120 - 200	120 - 200	0.30 - 0.60	0.40 - 0.80	0.40 - 0.80	0.50 - 1.00	0.50 - 0.90	0.60 - 1.20
	Medium-Carbon Steel	125-180	15 - 20	60 - 80	120 - 200	120 - 200	0.30 - 0.60	0.40 - 0.80	0.40 - 0.80	0.50 - 1.00	0.50 - 0.90	0.60 - 1.20
	1030, 1040, 1050, 1527, 1140, 1151, etc.	180-325	20 - 40	80 - 100	120 - 200	120 - 200	0.30 - 0.60	0.40 - 0.80	0.40 - 0.80	0.50 - 1.00	0.50 - 0.90	0.60 - 1.20
	Alloy Steel	125-180	10 - 15	60 - 80	-	100 - 150	0.30 - 0.60	0.40 - 0.80	0.40 - 0.80	0.50 - 1.00	0.50 - 0.90	0.60 - 1.20
	4140, 5140, 8640, etc.	180-375	8 - 10	60 - 80	-	-	0.25 - 0.50	0.30 - 0.60	0.30 - 0.60	0.40 - 0.80	0.40 - 0.70	0.50 - 1.00
	High-Strength Alloy 4340, 4330V, 300M, etc.	240-450	8 - 10	60 - 80	-	-	0.25 - 0.50	0.30 - 0.60	0.30 - 0.60	0.40 - 0.80	0.40 - 0.70	0.50 - 1.00
	Structural Steel	125-180	15 - 20	60 - 80	120 - 200	120 - 200	0.30 - 0.60	0.40 - 0.80	0.40 - 0.80	0.50 - 1.00	0.50 - 0.90	0.60 - 1.20
	A36, A285, A516	180-350	20 - 40	80 - 100	120 - 200	120 - 200	0.30 - 0.60	0.40 - 0.80	0.40 - 0.80	0.50 - 1.00	0.50 - 0.90	0.60 - 1.20
	Tool Steel	150-200	15 - 20	60 - 80	120 - 200	120 - 200	0.30 - 0.60	0.40 - 0.80	0.40 - 0.80	0.50 - 1.00	0.50 - 0.90	0.60 - 1.20
	H-13, H-21, A-4, 0-2, S-3, etc.	200-250	20 - 40	80 - 100	120 - 200	120 - 200	0.30 - 0.60	0.40 - 0.80	0.40 - 0.80	0.50 - 1.00	0.50 - 0.90	0.60 - 1.20
S	**High-Temp Alloy** Hastelloy B, Inconel 600, etc.	140-310	5 - 7	20 - 30	-	-	0.25 - 0.50	0.30 - 0.60	0.30 - 0.60	0.40 - 0.80	0.40 - 0.70	0.50 - 1.00
	Titanium Alloy	140-310	10 - 15	-	-	-	0.25 - 0.50	0.30 - 0.60	0.30 - 0.60	0.40 - 0.80	0.40 - 0.70	0.50 - 1.00
M	**Stainless Steel 400 Series** 416, 420, etc.	135-350	8 - 10	-	-	50 - 60	0.25 - 0.50	0.30 - 0.60	0.30 - 0.60	0.40 - 0.80	0.40 - 0.70	0.50 - 1.00
	Stainless Steel 300 Series 304, 316, 17-4PH, etc.	135-275	8 - 10	30 - 40	-	-	0.25 - 0.50	0.30 - 0.60	0.30 - 0.60	0.40 - 0.80	0.40 - 0.70	0.50 - 1.00
K	**Grey Cast Iron, Ductile Cast Iron,**	< 200	20 - 30	150 - 200	-	-	0.30 - 0.60	0.50 - 1.00	0.30 - 0.60	0.60 - 1.20	0.40 - 0.80	0.60 - 1.20
	Spheroidal Cast Iron (Pearlitic)	> 200	15 - 20	-	100 - 200	-	0.30 - 0.60	0.50 - 1.00	0.30 - 0.60	0.60 - 1.20	0.40 - 0.80	0.60 - 1.20
	Spheroidal Cast Iron (Ferritic)	260-320	15 - 20	-	100 - 120	-	0.30 - 0.60	0.50 - 1.00	0.30 - 0.60	0.60 - 1.20	0.40 - 0.80	0.60 - 1.20
N	**Copper and Alloys** **Brass**	< 500	80 - 100	100 - 200	-	-	0.30 - 0.60	0.40 - 0.80	0.40 - 0.80	0.50 - 1.00	0.50 - 0.90	0.60 - 1.20
	Bronze **Bronze Phosphorous**	< 180	40 - 80	80 - 160	-	150 - 200	0.30 - 0.60	0.40 - 0.80	0.40 - 0.80	0.50 - 1.00	0.50 - 0.90	0.60 - 1.20
	Aluminum and Alloys	< 150	100 - 300	100 - 300	100 - 300	100 - 300	0.30 - 0.60	0.50 - 1.00	0.30 - 0.60	0.60 - 1.20	0.40 - 0.80	0.60 - 1.20

Formulas

1. **RPM = m/min • 3.82 • DIA**
   where:
   RPM = revolutions per minute (rev/min)
   m/min = speed (m/min)
   DIA = diameter of reamer (mm)

2. **mm/min = RPM • mm/rev**
   where:
   mm/min = mm per minute (mm/min)
   RPM = revolutions per minute (rev/min)
   mm/rev = feed rate (mm/rev)

3. **m/min = RPM • 0.003 • DIA**
   where:
   m/min = speed (m/min)
   RPM = revolutions per minute (rev/min)
   DIA = diameter of reamer (mm)

IMPORTANT: The speeds and feeds listed on these pages are a general starting point for all applications. Factory technical assistance is also available for specific applications through our Application Engineering department. *ext:* **7611** | *email:* **appeng@alliedmachine.com**

Stock Allowance and Coolant | Metric (mm)

Replaceable Head Style | 5000 Series

ISO	Material	Hardness (BHN)	Coolant	Recommended Stock (mm) by Reamer Diameter* 9.61 mm - 17.60 mm	17.61 mm - 26.60 mm	26.61 mm - 32.60 mm
P	**Free-Machining Steel**	100 - 180	Water Soluble / Cutting Oil	0.15 - 0.25	0.20 - 0.40	0.30 - 0.40
	1118, 1215, 12L14, etc.	180 - 250				
	Low-Carbon Steel	85 - 180				
	1010, 1020, 1025, 1522, 1144, etc.	180 - 275				
	Medium-Carbon Steel	125 - 180				
	1030, 1040, 1050, 1527, 1140, 1151, etc.	180 - 325				
	Alloy Steel	125 - 180				
	4140, 5140, 8640, etc.	180 - 375				
	High-Strength Alloy 4340, 4330V, 300M, etc.	240 - 450				
	Structural Steel	125 - 180				
	A36, A285, A516	180 - 350				
	Tool Steel	150 - 200				
	H-13, H-21, A-4, 0-2, S-3, etc.	200 - 250				
S	**High-Temp Alloy** Hastelloy B, Inconel 600, etc.	140 - 310	Water Soluble / Cutting Oil	0.15 - 0.25	0.20 - 0.40	0.30 - 0.40
	Titanium Alloy	140 - 310				
M	**Stainless Steel 400 Series** 416, 420, etc.	135 - 350	Water Soluble / Cutting Oil	0.15 - 0.25	0.20 - 0.40	0.30 - 0.40
	Stainless Steel 300 Series 304, 316, 17-4PH, etc.	135 - 275				
K	**Grey Cast Iron, Ductile Cast Iron,**	< 200	Water Soluble / Cutting Oil	0.15 - 0.25	0.20 - 0.40	0.30 - 0.40
	Spheroidal Cast Iron (Pearlitic)	> 200				
	Spheroidal Cast Iron (Ferritic)	260 - 320				
N	**Copper and Alloys Brass**	< 500	Water Soluble	0.15 - 0.25	0.20 - 0.40	0.30 - 0.40
	Bronze Bronze Phosphorous	< 180	Water Soluble / Cutting Oil			
	Aluminum and Alloys	< 150	Water Soluble / Cutting Oil			

*Stock value is on diameter.

IMPORTANT: The speeds and feeds listed on these pages are a general starting point for all applications. Factory technical assistance is also available for specific applications through our Application Engineering department. *ext:* **7611** | *email:* **appeng@alliedmachine.com**

Recommended Cutting Data | Metric (mm)

Monobloc Style

ISO	Material	Hardness (BHN)	Speed (m/min)			Recommended Feed (mm/rev) by Reamer Diameter					
						5.80 mm - 10.00 mm		10.01 mm - 22.00 mm		22.01 mm - 32.10 mm	
			Uncoated Carbide	Coated Carbide	Cermet	Lead A, G	Lead E, N, M	Lead A, G	Lead E, N, M	Lead A, G	Lead E, N, M
P	**Free-Machining Steel**	100 - 180	7 - 15	60 - 80	90 - 300	0.20 - 0.40	0.30 - 0.60	0.40 - 0.60	0.40 - 1.00	0.50 - 0.80	0.60 - 1.20
	1118, 1215, 12L14, etc.	180 - 250	6 - 10	40 - 70	80 - 200	0.20 - 0.40	0.30 - 0.50	0.30 - 0.60	0.30 - 0.80	0.40 - 0.70	0.40 - 1.00
	Low-Carbon Steel	85 - 180	7 - 15	60 - 80	90 - 300	0.20 - 0.40	0.30 - 0.60	0.40 - 0.60	0.40 - 1.00	0.50 - 0.80	0.60 - 1.20
	1010, 1020, 1025, 1522, 1144, etc.	180 - 275	6 - 10	40 - 70	80 - 200	0.20 - 0.40	0.30 - 0.50	0.30 - 0.60	0.30 - 0.80	0.40 - 0.70	0.40 - 1.00
	Medium-Carbon Steel	125 - 180	7 - 15	60 - 80	90 - 300	0.20 - 0.40	0.30 - 0.60	0.40 - 0.60	0.40 - 1.00	0.50 - 0.80	0.60 - 1.20
	1030, 1040, 1050, 1527, 1140, 1151, etc.	180 - 325	6 - 10	40 - 70	80 - 200	0.20 - 0.40	0.30 - 0.50	0.30 - 0.60	0.30 - 0.80	0.40 - 0.70	0.40 - 1.00
	Alloy Steel	125 - 180	6 - 10	40 - 70	80 - 200	0.20 - 0.40	0.30 - 0.60	0.40 - 0.60	0.40 - 1.00	0.50 - 0.80	0.60 - 1.20
	4140, 5140, 8640, etc.	180 - 375	4 - 8	30 - 50	60 - 150	0.20 - 0.40	0.30 - 0.50	0.30 - 0.60	0.30 - 0.80	0.40 - 0.70	0.40 - 1.00
	High-Strength Alloy 4340, 4330V, 300M, etc.	240 - 450	3 - 6	15 - 30	60 - 120	0.15 - 0.30	0.20 - 0.40	0.20 - 0.50	0.30 - 0.60	0.30 - 0.60	0.40 - 0.80
	Structural Steel	125 - 180	7 - 15	60 - 80	90 - 300	0.20 - 0.40	0.30 - 0.60	0.40 - 0.60	0.40 - 1.00	0.50 - 0.80	0.60 - 1.20
	A36, A285, A516	180 - 350	6 - 10	40 - 70	80 - 200	0.20 - 0.40	0.30 - 0.50	0.30 - 0.60	0.30 - 0.80	0.40 - 0.70	0.40 - 1.00
	Tool Steel	150 - 200	7 - 15	60 - 80	90 - 300	0.20 - 0.40	0.30 - 0.60	0.40 - 0.60	0.40 - 1.00	0.50 - 0.80	0.60 - 1.20
	H-13, H-21, A-4, 0-2, S-3, etc.	200 - 250	6 - 10	40 - 70	80 - 200	0.20 - 0.40	0.30 - 0.50	0.30 - 0.60	0.30 - 0.80	0.40 - 0.70	0.40 - 1.00
S	**High-Temp Alloy** Hastelloy B, Inconel 600, etc.	140 - 310	4 - 10	30 - 50	–	0.15 - 0.30	–	0.20 - 0.40	–	0.30 - 0.50	–
	Titanium Alloy	140 - 310	4 - 15	30 - 50	–	0.15 - 0.30	–	0.20 - 0.40	–	0.30 - 0.50	–
M	**Stainless Steel 400 Series** 416, 420, etc.	135 - 350	4 - 10	30 - 50	60 - 150	0.20 - 0.40	0.30 - 0.50	0.30 - 0.60	0.30 - 0.80	0.40 - 0.70	0.40 - 1.00
	Stainless Steel 300 Series 304, 316, 17-4PH, etc.	135 - 275	4 - 10	30 - 50	60 - 150	0.20 - 0.40	0.30 - 0.50	0.30 - 0.60	0.30 - 0.80	0.40 - 0.70	0.40 - 1.00
K	**Grey Cast Iron, Ductile Cast Iron,**	< 200	15 - 30	50 - 70	–	0.20 - 0.40	0.30 - 0.60	0.35 - 0.60	0.50 - 0.80	0.40 - 1.00	0.60 - 1.50
	Spheroidal Cast Iron (Pearlitic)	> 200	10 - 20	50 - 70	–	0.20 - 0.40	0.30 - 0.60	0.35 - 0.60	0.50 - 0.80	0.40 - 1.00	0.60 - 1.50
	Spheroidal Cast Iron (Ferritic)	260 - 320	8 - 12	30 - 50	60 - 120	0.20 - 0.40	0.30 - 0.60	0.35 - 0.60	0.50 - 0.80	0.40 - 1.00	0.60 - 1.50
N	**Copper and Alloys Brass**	< 500	10 - 18	100 - 200	–	0.20 - 0.40	–	0.40 - 0.70	–	0.50 - 0.80	–
	Bronze Bronze Phosphorous	< 180	10 - 20	80 - 160	100 - 300	0.15 - 0.30	–	0.20 - 0.40	–	0.30 - 0.60	–
	Aluminum and Alloys	< 150	15 - 30	100 - 200	–	0.20 - 0.40	–	0.40 - 0.70	–	0.50 - 0.80	–

Formulas

1. **RPM = m/min • 3.82 • DIA**
   where:
   RPM = revolutions per minute (rev/min)
   m/min = speed (m/min)
   DIA = diameter of reamer (mm)

2. **mm/min = RPM • mm/rev**
   where:
   mm/min = mm per minute (mm/min)
   RPM = revolutions per minute (rev/min)
   mm/rev = feed rate (mm/rev)

3. **m/min = RPM • 0.003 • DIA**
   where:
   m/min = speed (m/min)
   RPM = revolutions per minute (rev/min)
   DIA = diameter of reamer (mm)

IMPORTANT: The speeds and feeds listed on these pages are a general starting point for all applications. Factory technical assistance is also available for specific applications through our Application Engineering department. *ext:* **7611** | *email:* **appeng@alliedmachine.com**

Stock Allowance and Coolant | Metric (mm)

Monobloc Style

ISO	Material	Hardness (BHN)	Coolant	Recommended Stock (mm) by Reamer Diameter* 5.80 mm - 10.00 mm	10.01 mm - 22.00 mm	22.01 mm - 32.10 mm
P	**Free-Machining Steel**	100 - 180	Water Soluble / Cutting Oil	0.08 - 0.15	0.15 - 0.25	0.15 - 0.30
	1118, 1215, 12L14, etc.	180 - 250				
	Low-Carbon Steel	85 - 180				
	1010, 1020, 1025, 1522, 1144, etc.	180 - 275				
	Medium-Carbon Steel	125 - 180				
	1030, 1040, 1050, 1527, 1140, 1151, etc.	180 - 325				
	Alloy Steel	125 - 180				
	4140, 5140, 8640, etc.	180 - 375				
	High-Strength Alloy 4340, 4330V, 300M, etc.	240 - 450				
	Structural Steel	125 - 180				
	A36, A285, A516	180 - 350				
	Tool Steel	150 - 200				
	H-13, H-21, A-4, 0-2, S-3, etc.	200 - 250				
S	**High-Temp Alloy** Hastelloy B, Inconel 600, etc.	140 - 310	Water Soluble / Cutting Oil	0.10 - 0.20	0.15 - 0.25	0.20 - 0.40
	Titanium Alloy	140 - 310				
M	**Stainless Steel 400 Series** 416, 420, etc.	135 - 350	Water Soluble / Cutting Oil	0.08 - 0.15	0.15 - 0.25	0.15 - 0.30
	Stainless Steel 300 Series 304, 316, 17-4PH, etc.	135 - 275				
K	**Grey Cast Iron, Ductile Cast Iron,**	< 200	Water Soluble / Cutting Oil	0.08 - 0.15	0.15 - 0.25	0.15 - 0.30
	Spheroidal Cast Iron (Pearlitic)	> 200				
	Spheroidal Cast Iron (Ferritic)	260 - 320				
N	**Copper and Alloys Brass**	< 500	Water Soluble	0.08 - 0.15	0.15 - 0.25	0.15 - 0.30
	Bronze Bronze Phosphorous	< 180	Water Soluble / Cutting Oil			
	Aluminum and Alloys	< 150	Water Soluble / Cutting Oil			

*Stock value is on diameter.

IMPORTANT: The speeds and feeds listed on these pages are a general starting point for all applications. Factory technical assistance is also available for specific applications through our Application Engineering department. *ext:* **7611** | *email:* **appeng@alliedmachine.com**

Recommended Cutting Data | Metric (mm)

Cutting Ring Style

ISO	Material	Hardness (BHN)	Speed (m/min)			Recommended Feed (mm/rev) by Reamer Diameter					
						17.60 mm - 40.00 mm		40.01 mm - 80.00 mm		80.01 mm - 200.00 mm	
			Uncoated Carbide	Coated Carbide	Cermet	Lead A, G	Lead E, N, M	Lead A, G	Lead E, N, M	Lead A, G	Lead E, N, M
P	**Free-Machining Steel**	100 - 180	7 - 15	60 - 80	90 - 300	0.50 - 0.80	0.60 - 1.20	0.50 - 1.00	0.80 - 1.60	0.80 - 1.50	1.00 - 2.20
	1118, 1215, 12L14, etc.	180 - 250	6 - 10	40 - 70	80 - 200	0.40 - 0.70	0.40 - 1.00	0.50 - 0.80	0.60 - 1.40	0.80 - 1.20	1.00 - 2.00
	Low-Carbon Steel	85 - 180	7 - 15	60 - 80	90 - 300	0.50 - 0.80	0.60 - 1.20	0.50 - 1.00	0.80 - 1.60	0.80 - 1.50	1.00 - 2.20
	1010, 1020, 1025, 1522, 1144, etc.	180 - 275	6 - 10	40 - 70	80 - 200	0.40 - 0.70	0.40 - 1.00	0.50 - 0.80	0.60 - 1.40	0.80 - 1.20	1.00 - 2.00
	Medium-Carbon Steel	125 - 180	7 - 15	60 - 80	90 - 300	0.50 - 0.80	0.60 - 1.20	0.50 - 1.00	0.80 - 1.60	0.80 - 1.50	1.00 - 2.20
	1030, 1040, 1050, 1527, 1140, 1151, etc.	180 - 325	6 - 10	40 - 70	80 - 200	0.40 - 0.70	0.40 - 1.00	0.50 - 0.80	0.60 - 1.40	0.80 - 1.20	1.00 - 2.00
	Alloy Steel	125 - 180	6 - 10	40 - 70	80 - 200	0.50 - 0.80	0.60 - 1.20	0.50 - 1.00	0.80 - 1.60	0.80 - 1.50	1.00 - 2.20
	4140, 5140, 8640, etc.	180 - 375	4 - 8	30 - 50	60 - 150	0.40 - 0.70	0.40 - 1.00	0.50 - 0.80	0.60 - 1.40	0.80 - 1.20	1.00 - 2.00
	High-Strength Alloy 4340, 4330V, 300M, etc.	240 - 450	3 - 6	15 - 30	60 - 120	0.30 - 0.60	0.40 - 0.80	0.40 - 0.80	0.50 - 1.00	0.60 - 1.00	0.70 - 1.40
	Structural Steel	125 - 180	7 - 15	60 - 80	90 - 300	0.50 - 0.80	0.60 - 1.20	0.50 - 1.00	0.80 - 1.60	0.80 - 1.50	1.00 - 2.20
	A36, A285, A516	180 - 350	6 - 10	40 - 70	80 - 200	0.40 - 0.70	0.40 - 1.00	0.50 - 0.80	0.60 - 1.40	0.80 - 1.20	1.00 - 2.00
	Tool Steel	150 - 200	7 - 15	60 - 80	90 - 300	0.50 - 0.80	0.60 - 1.20	0.50 - 1.00	0.80 - 1.60	0.80 - 1.50	1.00 - 2.20
	H-13, H-21, A-4, 0-2, S-3, etc.	200 - 250	6 - 10	40 - 70	80 - 200	0.40 - 0.70	0.40 - 1.00	0.50 - 0.80	0.60 - 1.40	0.80 - 1.20	1.00 - 2.00
S	**High-Temp Alloy** Hastelloy B, Inconel 600, etc.	140 - 310	4 - 8	30 - 50	–	0.30 - 0.50	–	0.40 - 0.60	–	0.50 - 0.70	–
	Titanium Alloy	140 - 310	4 - 8	30 - 50	–	0.30 - 0.50	–	0.40 - 0.60	–	0.50 - 0.70	–
M	**Stainless Steel 400 Series** 416, 420, etc.	135 - 350	4 - 8	30 - 50	60 - 150	0.40 - 0.70	0.40 - 1.00	0.50 - 0.80	0.60 - 1.40	0.80 - 1.20	1.00 - 2.00
	Stainless Steel 300 Series 304, 316, 17-4PH, etc.	135 - 275	4 - 8	30 - 50	60 - 150	0.40 - 0.70	0.40 - 1.00	0.50 - 0.80	0.60 - 1.40	0.80 - 1.20	1.00 - 2.00
K	**Grey Cast Iron, Ductile Cast Iron,**	< 200	15 - 30	50 - 70	–	0.40 - 1.00	0.60 - 1.50	0.60 - 1.30	0.80 - 1.60	0.80 - 1.70	1.00 - 2.25
	Spheroidal Cast Iron (Pearlitic)	> 200	10 - 20	50 - 70	–	0.40 - 1.00	0.60 - 1.50	0.60 - 1.30	0.80 - 1.60	0.80 - 1.70	1.00 - 2.25
	Spheroidal Cast Iron (Ferritic)	260 - 320	8 - 12	30 - 50	60 - 120	0.40 - 1.00	0.60 - 1.50	0.60 - 1.30	0.80 - 1.60	0.80 - 1.70	1.00 - 2.25
N	**Copper and Alloys Brass**	< 500	10 - 18	100 - 200	–	0.50 - 0.80	–	0.60 - 1.00	–	0.80 - 1.40	–
	Bronze Bronze Phosphorous	< 180	10 - 20	80 - 160	100 - 300	0.30 - 0.60	–	0.40 - 0.80	–	0.60 - 1.00	–
	Aluminum and Alloys	< 150	15 - 30	100 - 200	–	0.50 - 0.80	–	0.60 - 1.00	–	0.80 - 1.40	–

Formulas

1. **RPM = m/min • 3.82 • DIA**
   where:
   RPM = revolutions per minute (rev/min)
   m/min = speed (m/min)
   DIA = diameter of reamer (mm)

2. **mm/min = RPM • mm/rev**
   where:
   mm/min = mm per minute (mm/min)
   RPM = revolutions per minute (rev/min)
   mm/rev = feed rate (mm/rev)

3. **m/min = RPM • 0.003 • DIA**
   where:
   m/min = speed (m/min)
   RPM = revolutions per minute (rev/min)
   DIA = diameter of reamer (mm)

IMPORTANT: The speeds and feeds listed on these pages are a general starting point for all applications. Factory technical assistance is also available for specific applications through our Application Engineering department. *ext:* **7611** | *email:* **appeng@alliedmachine.com**

Stock Allowance and Coolant | Metric (mm)

Cutting Ring Style

ISO	Material	Hardness (BHN)	Coolant	Recommended Stock (mm) by Reamer Diameter* 17.60 mm - 40.00 mm	40.01 mm - 80.00 mm	80.01 mm - 200.00 mm
P	**Free-Machining Steel**	100 - 180	Water Soluble / Cutting Oil	0.15 - 0.30	0.20 - 0.40	0.25 - 0.50
	1118, 1215, 12L14, etc.	180 - 250				
	Low-Carbon Steel	85 - 180				
	1010, 1020, 1025, 1522, 1144, etc.	180 - 275				
	Medium-Carbon Steel	125 - 180				
	1030, 1040, 1050, 1527, 1140, 1151, etc.	180 - 325				
	Alloy Steel	125 - 180				
	4140, 5140, 8640, etc.	180 - 375				
	High-Strength Alloy 4340, 4330V, 300M, etc.	240 - 450				
	Structural Steel	125 - 180				
	A36, A285, A516	180 - 350				
	Tool Steel	150 - 200				
	H-13, H-21, A-4, 0-2, S-3, etc.	200 - 250				
S	**High-Temp Alloy** Hastelloy B, Inconel 600, etc.	140 - 310	Water Soluble / Cutting Oil	0.20 - 0.40	0.30 - 0.40	0.30 - 0.50
	Titanium Alloy	140 - 310				
M	**Stainless Steel 400 Series** 416, 420, etc.	135 - 350	Water Soluble / Cutting Oil	0.15 - 0.30	0.20 - 0.40	0.25 - 0.50
	Stainless Steel 300 Series 304, 316, 17-4PH, etc.	135 - 275				
K	**Grey Cast Iron, Ductile Cast Iron,**	< 200	Water Soluble / Cutting Oil	0.15 - 0.30	0.20 - 0.40	0.25 - 0.50
	Spheroidal Cast Iron (Pearlitic)	> 200				
	Spheroidal Cast Iron (Ferritic)	260 - 320				
N	**Copper and Alloys Brass**	< 500	Water Soluble	0.15 - 0.30	0.20 - 0.40	0.25 - 0.50
	Bronze Bronze Phosphorous	< 180	Water Soluble / Cutting Oil			
	Aluminum and Alloys	< 150	Water Soluble / Cutting Oil			

*Stock value is on diameter.

IMPORTANT: The speeds and feeds listed on these pages are a general starting point for all applications. Factory technical assistance is also available for specific applications through our Application Engineering department. *ext:* **7611** | *email:* **appeng@alliedmachine.com**

Setup Information

Replaceable Head Style | 7000 Series

Fixed Head Style

Tolerance: Fixed reamers are manufactured at 2/3 of the tolerance.

Recommended Tightening Torque

Imperial		Metric	
D_1 Range (inch)	Torque (in-lbs)	D_1 Range (mm)	Torque (N-m)
0.4646 - 0.5751	22.13	11.800 - 14.609	2.5
0.5752 - 0.6932	30.98	14.610 - 17.609	3.5
0.6933 - 0.8507	44.25	17.610 - 21.609	5.0
0.8508 - 1.0475	61.96	21.610 - 26.609	7.0
1.0476 - 1.2838	88.51	26.610 - 32.609	10.0
1.2839 - 1.5987	106.21	32.610 - 40.609	12.0
1.5988 - 1.9924	141.61	40.610 - 50.609	16.0
1.9925 - 2.3862	177.01	50.610 - 60.609	20.0

Expandable Head Style

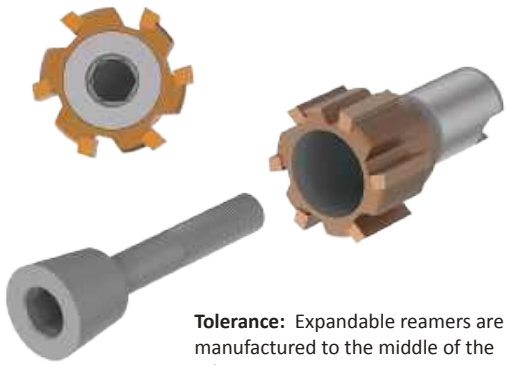

Tolerance: Expandable reamers are manufactured to the middle of the tolerance.

Expanding Heads Adjustment

When the size reaches its lower tolerance, the head can be adjusted to compensate for wear to the cutting edges. This operation can be repeated several times until the surface finish of the hole deteriorates to an unacceptable level.

Adjustment Procedure

Slowly turn the right-hand threaded screw clockwise while checking the diameter setting of the reamer with a micrometer. When the required diameter is achieved, the tool is ready for use.

Replaceable Head Reamer 7000 Series Assembly

Fixed and Expandable Styles

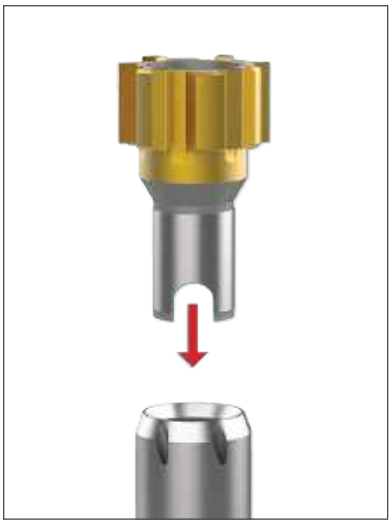

Step 1:
Insert the replaceable reamer head into the mandrel.

Step 2:
Insert the screw into the reamer head opening to secure it to the mandrel.

Step 3:
Tighten the screw.

NOTE: We recommend lubricating the thread and the conical surface of contact between the reamer head and the screw with antifriction MOLYKOTE® grease.

Setup Information

Replaceable Head Style | 9000 Series

Fixed Head Style

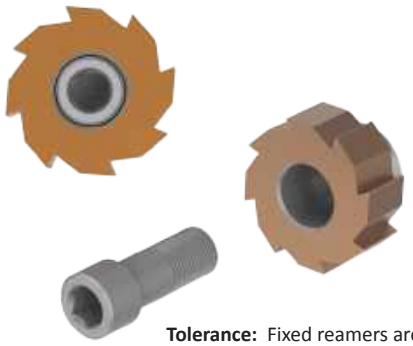

Tolerance: Fixed reamers are manufactured at 2/3 of the tolerance.

Recommended Tightening Torque

Imperial		Metric	
D_1 Range (inch)	Torque (in-lbs)	D_1 Range (mm)	Torque (N-m)
0.4646 - 0.5751	22.13	11.800 - 14.609	2.5
0.5752 - 0.6932	30.98	14.610 - 17.609	3.5
0.6933 - 0.8507	39.83	17.610 - 21.609	4.5
0.8508 - 1.0475	53.10	21.610 - 26.609	6.0
1.0476 - 1.2838	88.51	26.610 - 32.609	10.0
1.2839 - 1.5984	106.21	32.610 - 40.600	12.0

Replaceable Head Reamer 9000 Series Assembly

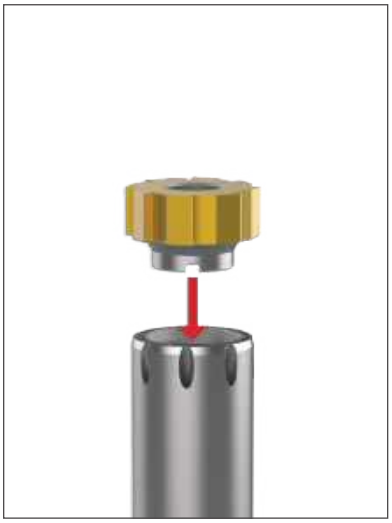

Step 1:
Carefully clean the connecting surfaces and insert the replaceable reamer head into the mandrel.

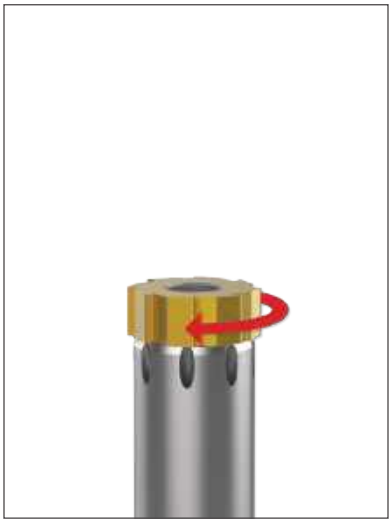

Step 2:
Screw the head in by hand clockwise until it makes contact the mandrel.

Step 3:
Tighten the screw according to the predetermined value in the table.

NOTE: We recommend lubricating the thread of the screw with antifriction MOLYKOTE® grease.

Setup Information

Replaceable Head Style | 5000 Series

Expandable Head Style

Tolerance: Expandable reamers are manufactured to the middle of the tolerance.

Expanding Heads Adjustment

When the size reaches its lower tolerance, the head can be adjusted to compensate for wear to the cutting edges. This operation can be repeated several times until the surface finish of the hole deteriorates to an unacceptable level.

Replaceable Head Reamer 5000 Series Assembly

Step 1:
Carefully clean the connecting surfaces and insert the replaceable reamer head into the mandrel. Screw it in by hand clockwise.

Step 2:
Tighten the replaceable head down with a wrench until the flat surface of the head is in complete contact with the mandrel.

Step 3:
Compensate for wear by adjusting the front expansion screw while using a wrench to keep the head still.

Setup Information

Monobloc Style

Tolerance

All monobloc reamers are ground to the requested diameter and set in the middle of the hole tolerance ready for use.

Adjustment

The adjustment must be made to compensate for wear to the cutting edges when the size reaches its lower tolerance. This operation can be repeated several times until the surface finish of the hole deteriorates to an unacceptable level. Then the reamer must be reground. The maximum expansion is about 1% of the diameter.

Setup Information

Cutting Ring Style

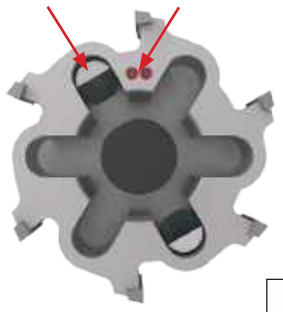

Step 1:
With the drive pins assembled, insert the cutting ring onto the mandrel. Make sure the dimples are at the 12:00 position with the drive pin at the 11:00 position.

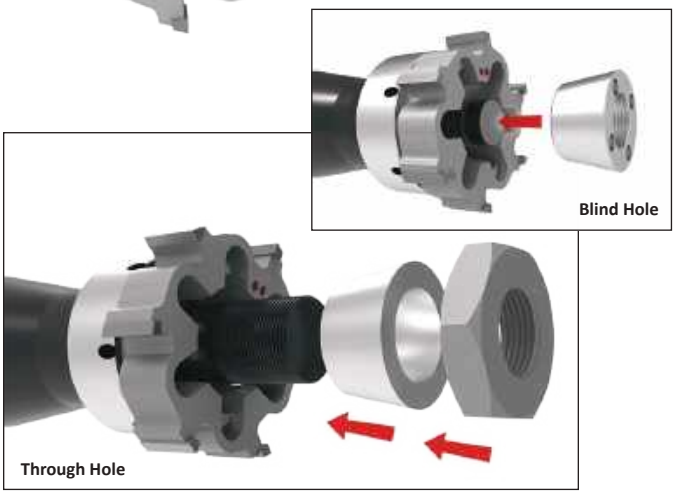

Step 2:

Insert the conical ring. Tighten the lock nut to set the desired reamer size (left-hand thread). Then loosen the lock nut slightly until it "clicks" against the drive wall.

NOTE: We recommend lubricating the thread and the conical surface of contact between the cutting ring and the conical ring with antifriction MOLYKOTE® grease.

Adjustment Procedure

1. Turn the conical ring slowly using an adjustment key (left-hand thread). Adjustment keys are supplied with reamers from diameter 17.600 mm to 40.599 mm.
2. Check the diameter setting of the cutting ring with a micrometer.
3. When the required diameter is achieved, unscrew the conical ring until there is a click and the drive pins are in traction in the opposite direction to the cutting action of the reamer. The reamer is ready for use.

For Diameter Range: 100.600 mm - 200.600 mm

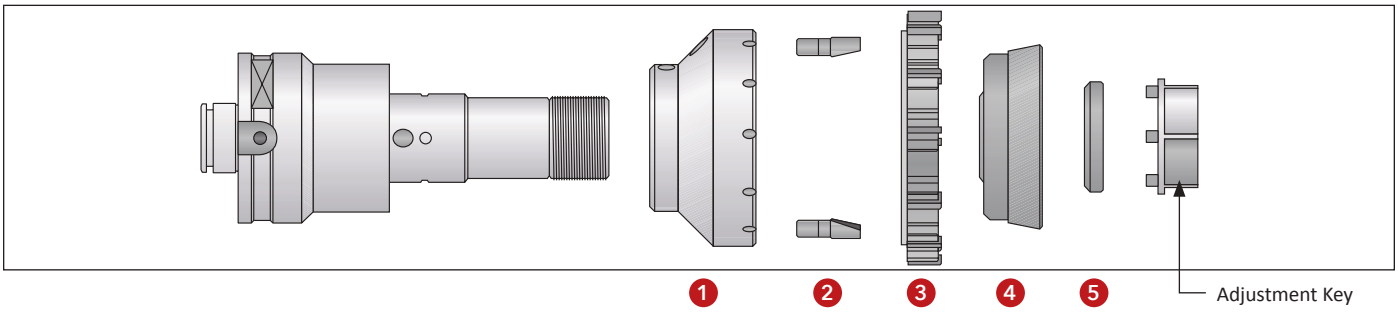

Assembly

1. With the drive pins (2) assembled, mount the flange (1) onto the mandrel. Assemble the cutting ring (3) so the slot on the left side of the dimple is mounted onto the drive pins (2). Insert the conical ring (4).
2. Screw the ring nut (5) onto the mandrel and tighten manually so the conical ring (4) makes contact with the cutting ring (3). The thread is left handed.

   NOTE: We recommend lubricating the thread and the conical surface of contact between the cutting ring and the conical ring with antifriction MOLYKOTE® grease.

Adjustment Procedure

1. Turn the ring nut (5) slowly using a pin spanner.
2. Check the diameter setting of the cutting ring with a micrometer. Make sure the drive pins (2) are in traction and in the opposite direction of the cutting action of the reamer.
3. When the required diameter is achieved, the tool is ready to use.

Diameter Measurement

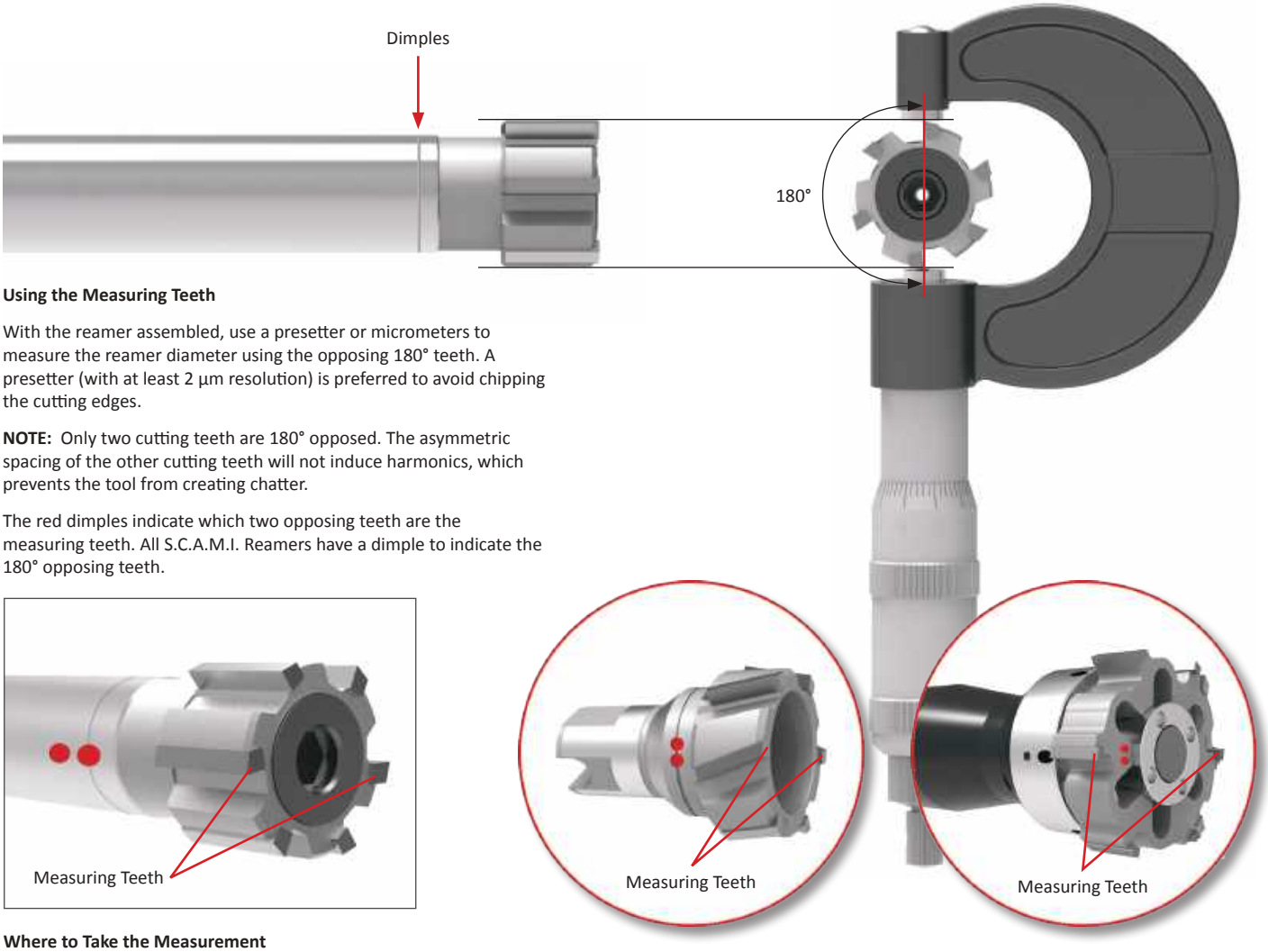

Using the Measuring Teeth

With the reamer assembled, use a presetter or micrometers to measure the reamer diameter using the opposing 180° teeth. A presetter (with at least 2 µm resolution) is preferred to avoid chipping the cutting edges.

NOTE: Only two cutting teeth are 180° opposed. The asymmetric spacing of the other cutting teeth will not induce harmonics, which prevents the tool from creating chatter.

The red dimples indicate which two opposing teeth are the measuring teeth. All S.C.A.M.I. Reamers have a dimple to indicate the 180° opposing teeth.

Where to Take the Measurement

When measuring the diameter, take the measurement from the area of the cutting tooth just below the transition from the lead angle to the OD edge. See the illustration below.

The back side of the OD edge has a back taper. This is why measuring from the location just below the lead angle/OD edge transition point results in the most accurate measurement (before the taper begins).

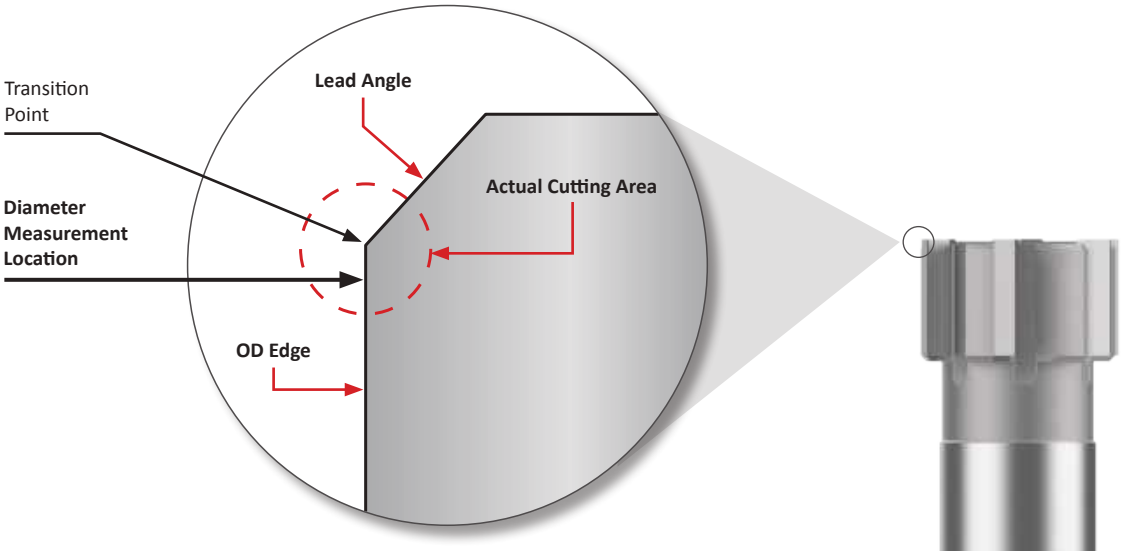

TIR Measurement

What is TIR?

Total indicator runout (TIR) refers to the distance to which the reamer is cutting off-center. In an ideal situation, the tool would begin in the exact center of the hole, and it would then rotate and cut in a perfect circle. This would result in a TIR of 0.

Because a perfect TIR of 0 is not practical, the goal is to maintain a TIR as close to 0 as possible. The closer the TIR is to 0, the better the reamer will perform.

Allied Machine recommends a TIR of < 0.0005" (0.013 mm).

Think of attempting to draw a perfect circle with a drafting compass, but the pencil runs slightly outside the point where the circle began because the center point shifted during the pencil's path. This slight area of overlap would be the TIR.

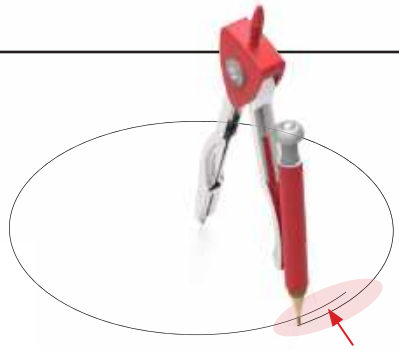

TIR: How far from center the tool will move during its path.

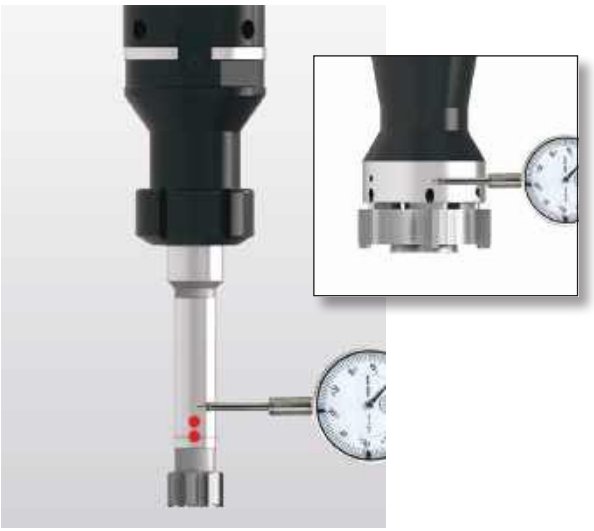

Step 1:

Check the TIR first on the mandrel (or ground) area of the reamer. Center the indicator in line with the dimple.

Measure the TIR by rotating the tool until the indicator reaches the highest value.

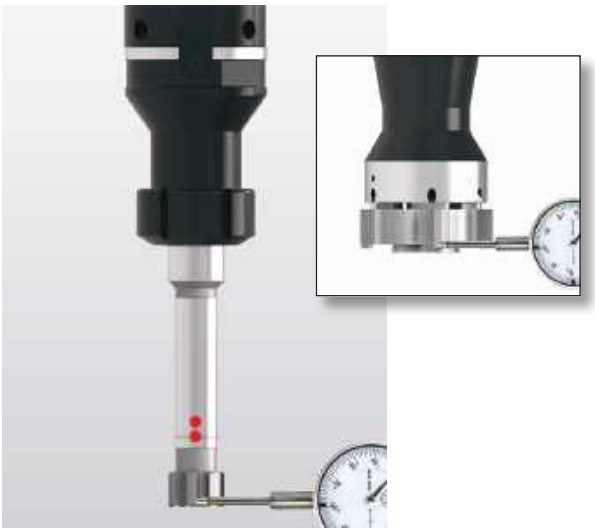

Step 2:

Next, check the TIR on the cutting teeth of the reamer.

NOTE: Rotate the tool counterclockwise to avoid chipping the cutting teeth with the indicator.

TIR Adjustment

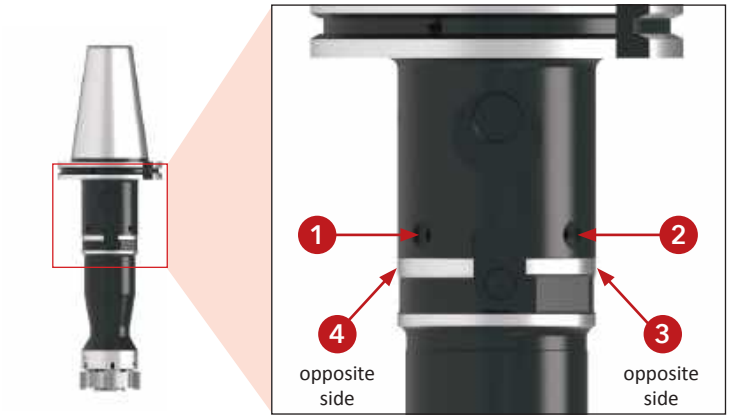

Step 1:

Place the tool into the machine spindle. Make contact with the four radial adjustment screws in a concentric fashion (this results in equal pressure surrounding the tool).

Tighten #1, then #3, followed by #2 and #4.

Step 2:

Swipe the dial indicator around the ground portion of the arbor near the coolant outlet holes to verify the TIR.

The TIR should be within 0.0005" (as close to 0 as possible). This will ensure the TIR check on the cutting teeth will be more true. It also means the arbor is running true to the shank.

Step 3:

Once the TIR is checked on the arbor, check the TIR on the cutting teeth. Rotate the tool counterclockwise to avoid chipping the cutting teeth.

Step 4:

Tighten down the central clamping screws. During the tightening, the tool body will shift slightly. Repeat the TIR check on the cutting teeth and adjust as necessary.

Troubleshooting Guide

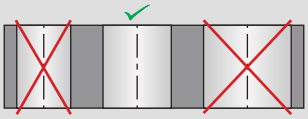

Oversized Hole

- Reamer is running eccentric to the center of the machine spindle. ▶ Use modular system with radial adjustment.
- Excessive misalignment causing reamer to cut on back taper. ▶ Fix the misalignment.
- Material buildup on cutting edges. ▶ Replace the coolant or change the cutting speed.
- Reamer diameter is too large. ▶ Use smaller reamer or regrind existing reamer.

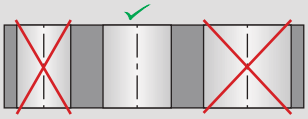

Undersized Hole

- The reamer diameter is too small. ▶ Use larger reamer.
- The reamer diameter is worn. ▶ Expand, regrind, or replace the reamer.
- The coolant is not suitable. ▶ Replace the coolant.
- Stock allowance is too small. ▶ Increase the stock allowance.
- The cutting speed is too low. ▶ Increase the cutting speed.

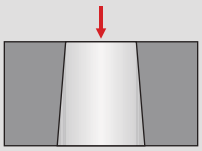

Tapered Hole

- Excessive misalignment. ▶ Correct the misalignment.

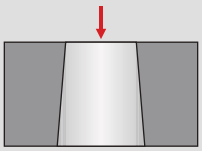

Burr at Hole Entry

- Excessive misalignment. ▶ Correct the misalignment.

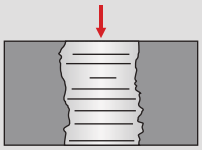

Hole is Not Straight

- Concentricity and alignment error between the workpiece and the tool. ▶ Correct the misalignment and use the modular system with radial adjustment.
- Asymmetrical cutting or angled surfaces. ▶ Create a chamfer on the lead-in.

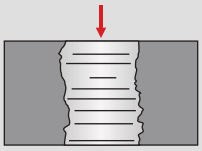

Poor Hole Finish

- One cutting edge is chipped. ▶ Regrind the reamer.
- The lead-in is irregular. ▶ Regrind the reamer.
- Back taper on the cutting edge is too great. ▶ Regrind the reamer.
- Excessive misalignment. ▶ Correct the misalignment or use the modular system.
- Cutting data is not correct. ▶ Verify the cutting data.
- Poor chip evacuation. ▶ Verify the coolant volume and pressure or use through-tool coolant.

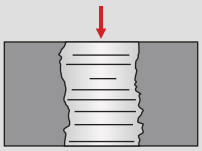

Reamer Creates Excessive Torque Loading

- Back taper on the cutting edge is too small. ▶ Regrind the reamer.
- The radially ground land is too wide. ▶ Regrind the reamer.
- The coolant is not suitable. ▶ Replace the coolant.

Notes

SECTION D

Burnishing

Roller Burnishing Systems

Through Hole Style | Blind Hole Style

S.C.A.M.I.®

Get the Finish You Need

Allied Machine is proud to offer roller burnishing tools from S.C.A.M.I. These hole finishing tools provide extremely high-quality surface finish on both through hole and blind hole applications. With roller burnishing, you can eliminate the need for slower and more costly finishing processes and secondary operations such as grinding, honing, and lapping.

Not only will the roller burnishing tools create a smooth surface finish, but they will also harden the material and increase the wear resistance of the part. The benefits of this single operation result in the hole quality you should expect from Allied Machine.

Creates fine surface finshes.	Increases wear and corrosion resistance.	Eliminates other processes and saves you money.

Applicable Industries

Aerospace | Agriculture | Automotive | Firearms | General Machining | Oil & Gas | Renewable Energy

Your safety and the safety of others is very important. This catalog contains important safety messages. Always read and follow all safety precautions.

This triangle is a safety hazard symbol. It alerts you to potential safety hazards that can cause tool failure and serious injury.

When you see this symbol in the catalog, look for a related safety message that may be near this triangle or referred to in the nearby text.

There are safety signal words also used in the catalog. Safety messages follow these words.

WARNING

WARNING (shown above) means that failure to follow the precautions in this message could result in tool failure and serious injury.

NOTICE means that failure to follow the precautions in this message could result in damage to the tool or machine but not result in personal injury.

NOTE and **IMPORTANT** are also used. These are important that you read and follow but are not safety-related.

Visit www.alliedmachine.com for the most up-to-date information and procedures.

Reference Icons
The following icons will appear throughout the catalog to help you navigate between products.

Technical Information
Detailed instructions and information regarding the corresponding part(s)

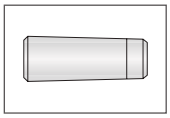

Through Hole Rolls
Refers to the rolls available for through hole burnishing tools

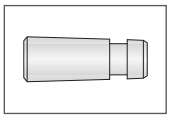

Blind Hole Rolls
Refers to the rolls available for blind hole burnishing tools

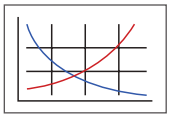

Recommended Cutting Data
Speed and feed recommendations for optimum and safe burnishing

Series	Diameter Range	
	Imperial (inch)	Metric (mm)
H	0.1555 - 0.5028	3.95 - 12.77
I	0.4976 - 0.6634	12.64 - 16.85
K	0.6535 - 0.9740	16.60 - 24.74
L	0.9661 - 1.2268	24.54 - 31.16
F	0.9661 - 1.2268	24.54 - 31.16
M	1.2146 - 1.4118	30.85 - 35.86
N	1.4020 - 1.8492	35.61 - 46.97
O	1.8390 - 2.2240	46.71 - 56.49
P	2.2138 - 2.7240	56.23 - 69.19
Q	2.7138 - 3.3492	68.93 - 85.07
R	3.3390 - 4.0992	84.81 - 104.12
S	4.0890 - 5.0370	103.86 - 127.94
T	5.0354 - 5.9016	127.90 - 149.90
U	5.9016 - 6.5315	149.90 - 165.90

S.C.A.M.I.®

Allied Machine & Engineering offers ALVAN® Burnishers through an exclusive supply agreement with S.C.A.M.I. s.n.c.

S.C.A.M.I. is an Italian manufacturer that has been producing high-quality cutting tools for over 40 years.

For additional information about all Allied Machine products, visit **www.alliedmachine.com.** For technical assistance, contact our Application Engineering department.
ext: **7611** | *email:* **appeng@alliedmachine.com**

Roller Burnishing Systems Contents

Introduction Information

Roller Burnishing Overview . . . . . 2 - 3
Product Offering 4
Product Selection Guide 5
Product Nomenclature 6

Burnishing Series

H Series . . . . . 7 - 11
I Series . . . . . 12 - 13
K Series . . . . . 14 - 15
L Series . . . . . 16 - 17
F Series . . . . . 18 - 19
M Series . . . . . 20 - 21
N Series . . . . . 22 - 23
O Series . . . . . 24 - 25
P Series . . . . . 26 - 27
Q Series . . . . . 28 - 29
R Series . . . . . 30 - 31
S Series . . . . . 32 - 33
T Series . . . . . 34 - 35
U Series . . . . . 36 - 37

Rolls . . . . . 38 - 39

Technical Information

Diameter Adjustment 40
How the Burnisher Works 41

Recommended Cutting Data

Imperial (inch) . . . . . 42 - 43
Metric (mm) . . . . . 44 - 45

Roller Burnishing Overview

The Principle of Roller Burnishing

Roller burnishing is a cold-working process that produces a fine surface finish. The planetary rotation of the hardened rolls creates pressure over a metal surface. Unlike cold rolling, which produces large sectional changes, roller burnishing involves cold-working on the surface of the workpiece to improve the surface structure.

All machined surfaces consist of a series of peaks and valleys, all having irregular height and spacing. The plastic deformation created by roller burnishing is a displacement of the material in the peaks. When under pressure, the material in the peaks flows into the valleys. During the process, tool marks and irregularities are rolled out, resulting in a mirror-like finish with a tough, work-hardened surface that is also wear and corrosion resistant.

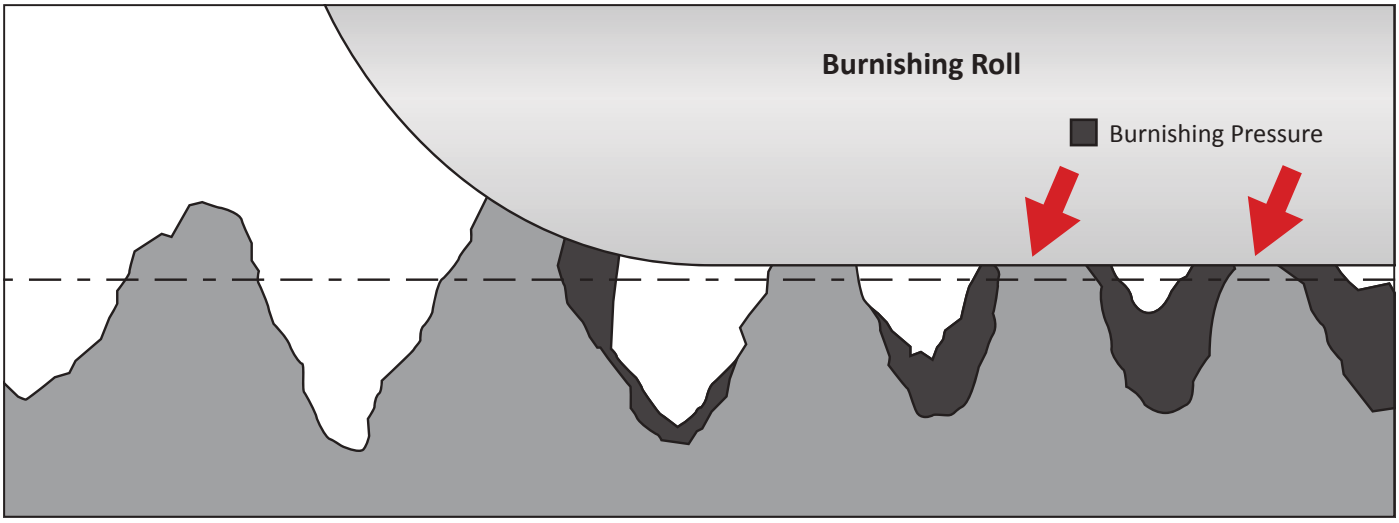

Advantages of Roller Burnishing: Metallurgical Properties

- Grain structure is condensed and refined.
- The compacted surface is ***smoother, harder, and more wear resistant*** than ground or honed surfaces.
- The process reduces surface porosity and also removes scratches that could hold reactive substances or contaminants. ***This increases the corrosion resistance***.
- Depending on the material, the surface hardness can be ***increased by as much as 10 points Rockwell C***. This may eliminate the need for heat treatment.
- The plastic deformation induces residual compressive stresses in the surface of the part. This increases the strength properties and fatigue life of the part because any forces on the part must overcome these residual stresses, as well as the tensile strength of the materials, before fatigue conditions occur.

Advantages of Roller Burnishing: Surface Finish

- Creates a high finish to any machinable metal.
- Surfaces that are bored, reamed, or turned to 125 microinches or more can be finished to 4 microinch CLA or less in one pass (at feed rates of 125 to 300 mm/min).
- Roller burnishing replaces grinding, honing, lapping, and other expensive secondary operations.
- Tool marks are rolled out.

The Process

- The first contact with the machined surface occurs in Section A.
- Plastic deformation occurs in Section B as the yield point of the surface is exceeded.
- Section D is the pressurized depth.
- Once the material endures the maximum compressive strain (Section C), it starts relieving elastically (Section E) through the finishing zone.
- This leaves a smooth surface and a compressive residual stress of significant peak value.
- The stresses formed on the material during the compression decrease toward the center. These stresses reach approximately 1 mm below the surface. This increases the surface hardness.

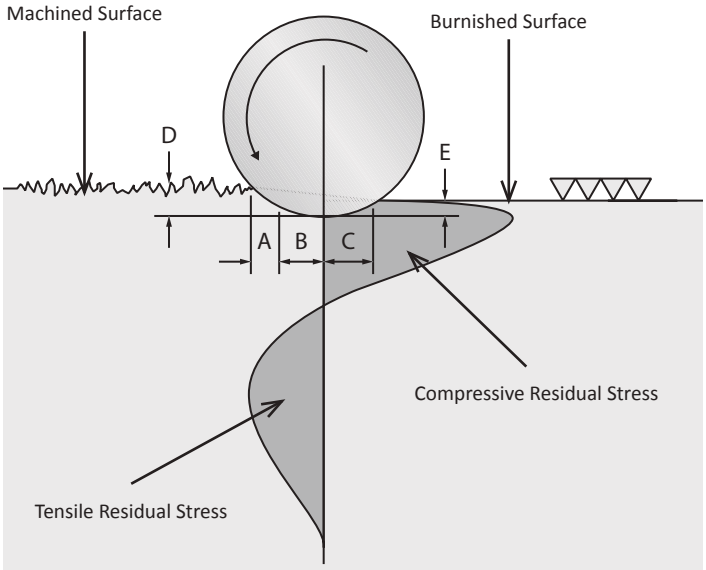

Roller Burnishing Overview

When to Roller Burnish

Conditions for Roller Burnishing

Roller burnishing is a cold-working process used to achieve fine hole finishes. In order to achieve the most optimal results, adhere to the benchmarks below:

- **Finishing:** The ductility and hardness of the workpiece material along with the surface preparation dictates the quality of the burnished finish.
- **Workability:** Any ductile and malleable material up to RC40 can be roller burnished.
- **Worked Surface Properties:** Workpieces with an interrupted surface within 10% of the circumference can be successfully burnished with a standard tool (see Figures 1 and 2).

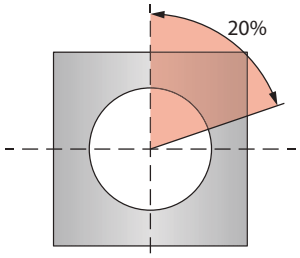

Figure 1

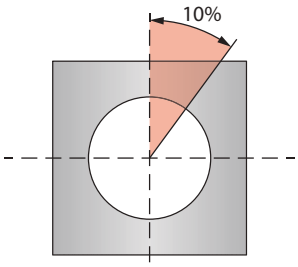

Figure 2

- **Tolerance of the Burnished Piece:** The tolerance range achieved from the burnishing will be equal to that achieved from the premachining since no material will be removed.

The ideal surface for burnishing consists of a succession of peaks. These peaks correspond on regular feed of the preparation tool (see Figure 3). We suggest the ALVAN® expandable reamer for preburnishing because it creates a uniform roughness and a tolerance range of H6 - H7.

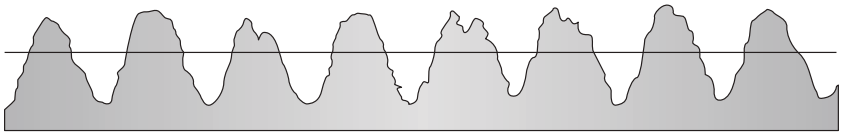

Figure 3

Premachining tapers and surface irregularities caused by cutting tool failure must be noted because these conditions cannot be corrected by the roller burnishing process (see Figures 4 and 5).

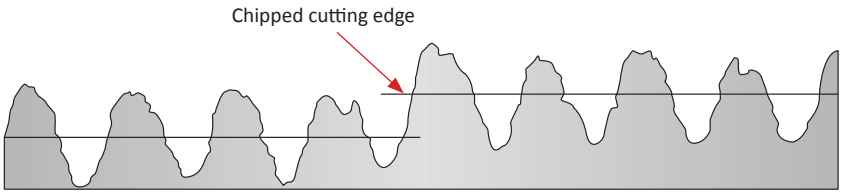

Figure 4

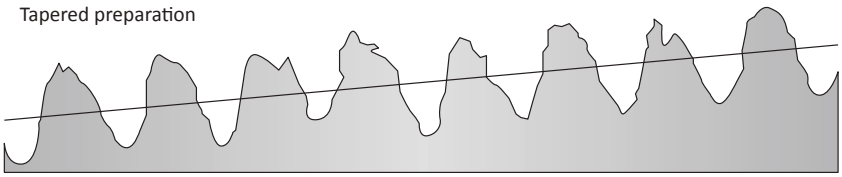

Figure 5

Product Offering

Through Hole Style
0.1555" - 6.5315" (3.95 mm - 165.90 mm)

Blind Hole Style
0.2319" - 6.5315" (5.89 mm - 165.90 mm)

Advantages of the Roller Burnishing Tool

- ***Provides accurate size control***
  tolerances within 0.0005" or better (depending on variables such as material)
- ***Produces fine surface finishes***
  between 1 - 16 microinches Ra (0.03 - 0.4 micromillimeters Ra)
- ***Increases surface hardness***
  by 5 - 10% or more
- ***Performs a much cleaner operation***
  than honing or other abrasive finishing methods
- ***Provides versatility***
  because the operation can be performed on any rotating spindle
- ***Eliminates the need for slower and costly finishing processes and secondary operations***
  such as grinding, honing, lapping, etc.

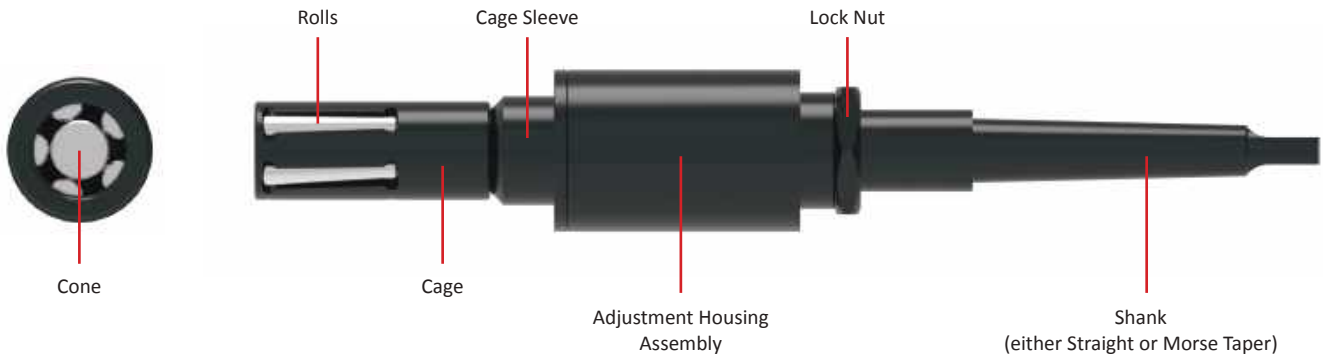

The Tool Components

All roller burnishing tools (both through hole and blind hole) are composed of the basic burnisher assembly including:

- Cage
- Cone
- Rolls
- Shank (either straight or Morse Taper)

Product Selection Guide

Series	Diameter Range (inch / mm)							Length			
	0 - 1 — 0 - 25.4	1 - 2 — 25.4 - 50.8	2 - 3 — 50.8 - 76.2	3 - 4 — 76.2 - 101.6	4 - 5 — 101.6 - 127	5 - 6 — 127 - 152.4	6 - 7 — 152.4 - 177.8	Short	Standard	Long	Unlimited
H* Mini	✓							✓	✓		
H*	✓							✓	✓	✓	
I	✓							✓	✓	✓	
K	✓							✓	✓	✓	
L	✓	✓						✓	✓	✓	
F		✓									✓
M		✓									✓
N		✓	✓								✓
O			✓								✓
P			✓	✓							✓
Q				✓							✓
R				✓	✓						✓
S					✓	✓					✓
T						✓	✓				✓
U							✓				✓

*For H series: Through hole tools start at 0.1555" (3.95 mm) and blind hole tools start at 0.2319" (5.89mm).

When to *ORDER UP*

In some cases, there will be a diameter overlap between a series and the series after it. If the diameter you need falls into this overlap, choose the higher of the two series.

Example:
You need a 24.64 mm diameter tool. This diameter falls into both the K series and the L series.

- K series diameter range = 16.60 mm - 24.74 mm
- L series diameter range = 24.54 mm - 31.16 mm

In this scenario, you would choose the L series tool that covers the 24.64 diameter.

Product Nomenclature

Roller Burnishing Tools

RDK	H	–	2	1	0	–	004,70
1	2		3	4	5		6

1. Type of Burnisher

RDK = Through holes

RSK = Blind holes

2. Series

H = H series	**F** = F series	**P** = P series	**T** = T series
I = I series	**M** = M series	**Q** = Q series	**U** = U series
K = K series	**N** = N series	**R** = R series	
L = L series	**O** = O series	**S** = S series	

3. Shank Type

0 = Straight (mini)

1 = Straight

2 = Morse Taper

4. Length

0 = Unlimited

1 = Short

2 = Standard

3 = Long

5. Cage Style

0 = Standard

2 = Mini

6. Diameter

Through Hole Tools = Minimum diameter of burnishing range

Blind Hole Tools = Diameter to burnish

Cone Reduction Factor (Blind Holes)

When burnishing blind holes, the cone must not extend past the end of the rolls. If it does, the cone will collide with the bottom of the hole. Each burnishing tool has an adjustment range of:

- Approximately 0.5 mm on diameter for tools below 12.7 mm
- Approximately 1.0 mm on diameter for tools above 12.7 mm

For through hole burnishing tools, the standard cone value "x" is 1. If the standard cone is used for blind hole burnishing, the only way it will not extend past the end of the rolls is to reduce the length of the cone. The required length reduction is dependent on the set diameter versus the minimum capable diameter of the tool. The factor of reduction (x) can be calculated using the formulas below and will be a whole integer number ranging from 2 - 8.

The "x" value could result in a decimal figure. If so, round down for answers below 0.80 and round up for answers 0.80 and above.

Diameter (5.89 mm - 12.77 mm)

$$x = 1 + \frac{Z - Y}{0.05}$$

Z = diameter of the hole
Y = minimum diameter setting of tool

Example: Z = 11.05 Y = 10.71 mm

$$x = 1 + \frac{11.05 - 10.71}{0.05} = 7.8$$

which is approximated at "x" = 8

Correct Cone: RSTH-038-10025

Diameter (12.64 mm - 127.94 mm)

$$x = 1 + \frac{Z - Y}{0.10}$$

Z = diameter of the hole
Y = minimum diameter setting of tool

Example: Z = 17.76 Y = 17.40 mm

$$x = 1 + \frac{17.76 - 17.40}{0.10} = 4.6$$

which is approximated at "x" = 4

Correct Cone: RSTK-034-00044

Diameter (127.90 mm - 165.90 mm)

$$xx = 31 + \frac{Z - Y}{0.10}$$

Z = diameter of the hole
Y = minimum diameter setting of tool

Example: Z = 148.20 Y = 147.90 mm

$$xx = 31 + \frac{148.20 - 147.90}{0.10} = 34$$

Correct Cone: RSTT-034-01480

Reference Key

Symbol	Attribute
D_1	Diameter range
L_2	Burnishing length
L_3	Reference length

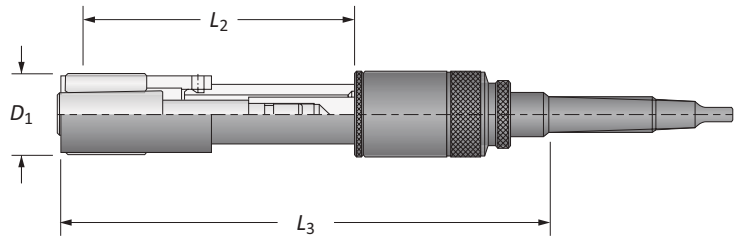

Roller Burnishing Tools | Through Holes

H Series (mini) | Diameter Range: 0.1555" - 0.1870" (3.95 mm - 4.75 mm)

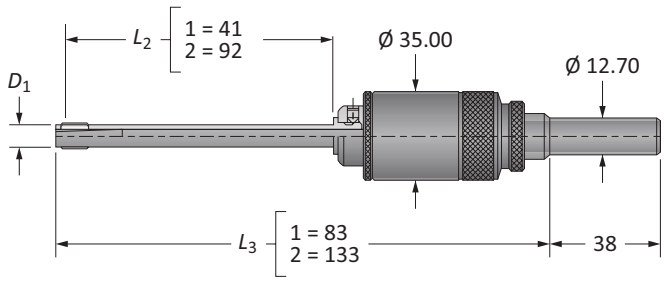

D_1 Imperial (in)	D_1 Metric (mm)	L	Part No. Assembly with Straight Shank	Spare Parts: Cage	Cone	Rolls	Qty Rolls
0.1555 - 0.1634	3.95 - 4.15	1	**RDKH-012-00395**	RDCH-012-10005	RDTH-031-10012	RDRY-704-00047	3
0.1555 - 0.1634	3.95 - 4.15	2	**RDKH-022-00395**	RDCH-012-20005	RDTH-031-20012	RDRY-704-00047	3
0.1638 - 0.1713	4.16 - 4.35	1	**RDKH-012-00416**	RDCH-012-10006	RDTH-035-10012	RDRY-704-00047	3
0.1638 - 0.1713	4.16 - 4.35	2	**RDKH-022-00416**	RDCH-012-20006	RDTH-035-20012	RDRY-704-00047	3
0.1717 - 0.1791	4.36 - 4.55	1	**RDKH-012-00436**	RDCH-012-10007	RDTH-031-10013	RDRY-704-00047	3
0.1717 - 0.1791	4.36 - 4.55	2	**RDKH-022-00436**	RDCH-012-20007	RDTH-031-20013	RDRY-704-00047	3
0.1795 - 0.1870	4.56 - 4.75	1	**RDKH-012-00456**	RDCH-012-10008	RDTH-035-10013	RDRY-704-00047	3
0.1795 - 0.1870	4.56 - 4.75	2	**RDKH-022-00456**	RDCH-012-20008	RDTH-035-20013	RDRY-704-00047	3

NOTE: Each roller burnishing tool comes assembled complete with cage, cone, and rolls.

D: 42 - 45 | D: 40 - 41 | D: 38

Key on D: 1

A DRILLING
B BORING
C REAMING
D BURNISHING
E THREADING
X SPECIALS

Roller Burnishing Tools | Through Holes

H Series | Diameter Range: 0.1850" - 0.5028" (4.70 mm - 12.77 mm)

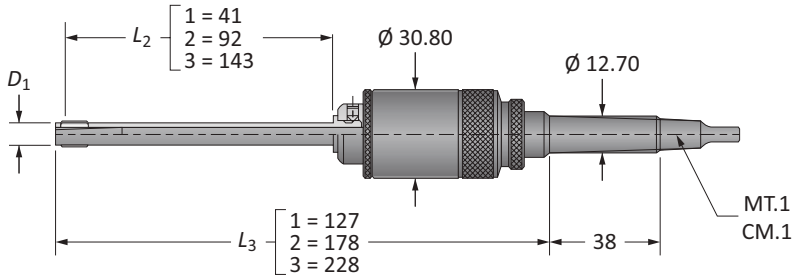

D_1			Part No.		Spare Parts			
Imperial (in)	Metric (mm)	L	Assembly with Morse Taper Shank	Assembly with Straight Shank	Cage	Cone	Rolls	Qty Rolls
0.1850 - 0.1929	4.70 - 4.90	1	**RDKH-210-00470**	**RDKH-110-00470**	RDCH-011-10012	RDTH-031-10012	RDRY-704-00062	3
0.1850 - 0.1929	4.70 - 4.90	2	**RDKH-220-00470**	**RDKH-120-00470**	RDCH-011-20012	RDTH-031-20012	RDRY-704-00062	3
0.1850 - 0.1929	4.70 - 4.90	3	**RDKH-230-00470**	**RDKH-130-00470**	RDCH-011-30012	RDTH-031-30012	RDRY-704-00062	3
0.1917 - 0.2035	4.87 - 5.17	1	**RDKH-210-00487**	**RDKH-110-00487**	RDCH-011-10011	RSTH-033-10012	RDRY-704-00062	3
0.1917 - 0.2035	4.87 - 5.17	2	**RDKH-220-00487**	**RDKH-120-00487**	RDCH-011-20011	RSTH-033-20012	RDRY-704-00062	3
0.1917 - 0.2035	4.87 - 5.17	3	**RDKH-230-00487**	**RDKH-130-00487**	RDCH-011-30011	RSTH-033-30012	RDRY-704-00062	3
0.1996 - 0.2200	5.07 - 5.59	1	**RDKH-210-00507**	**RDKH-110-00507**	RDCH-011-10013	RDTH-031-10013	RDRY-704-00062	5
0.1996 - 0.2200	5.07 - 5.59	2	**RDKH-220-00507**	**RDKH-120-00507**	RDCH-011-20013	RDTH-031-20013	RDRY-704-00062	5
0.1996 - 0.2200	5.07 - 5.59	3	**RDKH-230-00507**	**RDKH-130-00507**	RDCH-011-30013	RDTH-031-30013	RDRY-704-00062	5
0.2161 - 0.2358	5.49 - 5.99	1	**RDKH-210-00549**	**RDKH-110-00549**	RDCH-011-10014	RDTH-031-10013	RDRY-704-00070	5
0.2161 - 0.2358	5.49 - 5.99	2	**RDKH-220-00549**	**RDKH-120-00549**	RDCH-011-20014	RDTH-031-20013	RDRY-704-00070	5
0.2161 - 0.2358	5.49 - 5.99	3	**RDKH-230-00549**	**RDKH-130-00549**	RDCH-011-30014	RDTH-031-30013	RDRY-704-00070	5
0.2319 - 0.2524	5.89 - 6.41	1	**RDKH-210-00589**	**RDKH-110-00589**	RDCH-011-10015	RDTH-031-10015	RDRY-704-00070	5
0.2319 - 0.2524	5.89 - 6.41	2	**RDKH-220-00589**	**RDKH-120-00589**	RDCH-011-20015	RDTH-031-20015	RDRY-704-00070	5
0.2319 - 0.2524	5.89 - 6.41	3	**RDKH-230-00589**	**RDKH-130-00589**	RDCH-011-30015	RDTH-031-30015	RDRY-704-00070	5
0.2484 - 0.2681	6.31 - 6.81	1	**RDKH-210-00631**	**RDKH-110-00631**	RDCH-011-10016	RDTH-031-10015	RDRY-704-00078	5
0.2484 - 0.2681	6.31 - 6.81	2	**RDKH-220-00631**	**RDKH-120-00631**	RDCH-011-20016	RDTH-031-20015	RDRY-704-00078	5
0.2484 - 0.2681	6.31 - 6.81	3	**RDKH-230-00631**	**RDKH-130-00631**	RDCH-011-30016	RDTH-031-30015	RDRY-704-00078	5
0.2642 - 0.2839	6.71 - 7.21	1	**RDKH-210-00671**	**RDKH-110-00671**	RDCH-011-10017	RDTH-031-10017	RDRY-704-00078	5
0.2642 - 0.2839	6.71 - 7.21	2	**RDKH-220-00671**	**RDKH-120-00671**	RDCH-011-20017	RDTH-031-20017	RDRY-704-00078	5
0.2642 - 0.2839	6.71 - 7.21	3	**RDKH-230-00671**	**RDKH-130-00671**	RDCH-011-30017	RDTH-031-30017	RDRY-704-00078	5
0.2803 - 0.3000	7.12 - 7.62	1	**RDKH-210-00712**	**RDKH-110-00712**	RDCH-011-10018	RDTH-031-10017	RDRY-704-00086	5
0.2803 - 0.3000	7.12 - 7.62	2	**RDKH-220-00712**	**RDKH-120-00712**	RDCH-011-20018	RDTH-031-20017	RDRY-704-00086	5
0.2803 - 0.3000	7.12 - 7.62	3	**RDKH-230-00712**	**RDKH-130-00712**	RDCH-011-30018	RDTH-031-30017	RDRY-704-00086	5
0.2945 - 0.3142	7.48 - 7.98	1	**RDKH-210-00748**	**RDKH-110-00748**	RDCH-011-10019	RDTH-031-10019	RDRY-704-00086	5
0.2945 - 0.3142	7.48 - 7.98	2	**RDKH-220-00748**	**RDKH-120-00748**	RDCH-011-20019	RDTH-031-20019	RDRY-704-00086	5
0.2945 - 0.3142	7.48 - 7.98	3	**RDKH-230-00748**	**RDKH-130-00748**	RDCH-011-30019	RDTH-031-30019	RDRY-704-00086	5
0.3102 - 0.3299	7.88 - 8.38	1	**RDKH-210-00788**	**RDKH-110-00788**	RDCH-011-10020	RDTH-031-10019	RDRY-704-00093	5
0.3102 - 0.3299	7.88 - 8.38	2	**RDKH-220-00788**	**RDKH-120-00788**	RDCH-011-20020	RDTH-031-20019	RDRY-704-00093	5
0.3102 - 0.3299	7.88 - 8.38	3	**RDKH-230-00788**	**RDKH-130-00788**	RDCH-011-30020	RDTH-031-30019	RDRY-704-00093	5
0.3260 - 0.3461	8.28 - 8.79	1	**RDKH-210-00828**	**RDKH-110-00828**	RDCH-011-10021	RDTH-031-10021	RDRY-704-00093	5
0.3260 - 0.3461	8.28 - 8.79	2	**RDKH-220-00828**	**RDKH-120-00828**	RDCH-011-20021	RDTH-031-20021	RDRY-704-00093	5
0.3260 - 0.3461	8.28 - 8.79	3	**RDKH-230-00828**	**RDKH-130-00828**	RDCH-011-30021	RDTH-031-30021	RDRY-704-00093	5

NOTE: Each roller burnishing tool comes assembled complete with cage, cone, and rolls.

D: 42 - 45 D: 40 - 41 D: 38

Key on D: 1

Roller Burnishing Tools | Through Holes (continued)

H Series | Diameter Range: 0.1850" - 0.5028" (4.70 mm - 12.77 mm)

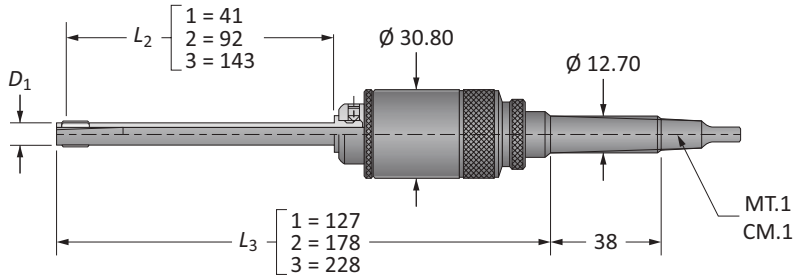

D_1			Part No.		Spare Parts			
Imperial (in)	Metric (mm)	L	Assembly with Morse Taper Shank	Assembly with Straight Shank	Cage	Cone	Rolls	Qty Rolls
0.3410 - 0.3606	8.66 - 9.16	1	**RDKH-210-00866**	**RDKH-110-00866**	RDCH-011-10022	RDTH-031-10019	RDRY-704-00109	5
0.3410 - 0.3606	8.66 - 9.16	2	**RDKH-220-00866**	**RDKH-120-00866**	RDCH-011-20022	RDTH-031-20019	RDRY-704-00109	5
0.3410 - 0.3606	8.66 - 9.16	3	**RDKH-230-00866**	**RDKH-130-00866**	RDCH-011-30022	RDTH-031-30019	RDRY-704-00109	5
0.3567 - 0.3768	9.06 - 9.57	1	**RDKH-210-00906**	**RDKH-110-00906**	RDCH-011-10023	RDTH-031-10021	RDRY-704-00109	5
0.3567 - 0.3768	9.06 - 9.57	2	**RDKH-220-00906**	**RDKH-120-00906**	RDCH-011-20023	RDTH-031-20021	RDRY-704-00109	5
0.3567 - 0.3768	9.06 - 9.57	3	**RDKH-230-00906**	**RDKH-130-00906**	RDCH-011-30023	RDTH-031-30021	RDRY-704-00109	5
0.3732 - 0.3933	9.48 - 9.99	1	**RDKH-210-00948**	**RDKH-110-00948**	RDCH-011-10024	RDTH-031-10024	RDRY-704-00109	5
0.3732 - 0.3933	9.48 - 9.99	2	**RDKH-220-00948**	**RDKH-120-00948**	RDCH-011-20024	RDTH-031-20024	RDRY-704-00109	5
0.3732 - 0.3933	9.48 - 9.99	3	**RDKH-230-00948**	**RDKH-130-00948**	RDCH-011-30024	RDTH-031-30024	RDRY-704-00109	5
0.3902 - 0.4102	9.91 - 10.42	1	**RDKH-210-00991**	**RDKH-110-00991**	RDCH-011-10025	RDTH-031-10025	RDRY-704-00109	5
0.3902 - 0.4102	9.91 - 10.42	2	**RDKH-220-00991**	**RDKH-120-00991**	RDCH-011-20025	RDTH-031-20025	RDRY-704-00109	5
0.3902 - 0.4102	9.91 - 10.42	3	**RDKH-230-00991**	**RDKH-130-00991**	RDCH-011-30025	RDTH-031-30025	RDRY-704-00109	5
0.4051 - 0.4252	10.29 - 10.80	1	**RDKH-210-01029**	**RDKH-110-01029**	RDCH-011-10026	RDTH-031-10024	RDRY-704-00125	5
0.4051 - 0.4252	10.29 - 10.80	2	**RDKH-220-01029**	**RDKH-120-01029**	RDCH-011-20026	RDTH-031-20024	RDRY-704-00125	5
0.4051 - 0.4252	10.29 - 10.80	3	**RDKH-230-01029**	**RDKH-130-01029**	RDCH-011-30026	RDTH-031-30024	RDRY-704-00125	5
0.4217 - 0.4413	10.71 - 11.21	1	**RDKH-210-01071**	**RDKH-110-01071**	RDCH-011-10027	RDTH-031-10025	RDRY-704-00125	5
0.4217 - 0.4413	10.71 - 11.21	2	**RDKH-220-01071**	**RDKH-120-01071**	RDCH-011-20027	RDTH-031-20025	RDRY-704-00125	5
0.4217 - 0.4413	10.71 - 11.21	3	**RDKH-230-01071**	**RDKH-130-01071**	RDCH-011-30027	RDTH-031-30025	RDRY-704-00125	5
0.4374 - 0.4571	11.11 - 11.61	1	**RDKH-210-01111**	**RDKH-110-01111**	RDCH-011-10028	RDTH-031-10028	RDRY-704-00125	5
0.4374 - 0.4571	11.11 - 11.61	2	**RDKH-220-01111**	**RDKH-120-01111**	RDCH-011-20028	RDTH-031-20028	RDRY-704-00125	5
0.4374 - 0.4571	11.11 - 11.61	3	**RDKH-230-01111**	**RDKH-130-01111**	RDCH-011-30028	RDTH-031-30028	RDRY-704-00125	5
0.4512 - 0.4709	11.46 - 11.96	1	**RDKH-210-01146**	**RDKH-110-01146**	RDCH-011-10029	RDTH-031-10024	RDRY-704-00148	5
0.4512 - 0.4709	11.46 - 11.96	2	**RDKH-220-01146**	**RDKH-120-01146**	RDCH-011-20029	RDTH-031-20024	RDRY-704-00148	5
0.4512 - 0.4709	11.46 - 11.96	3	**RDKH-230-01146**	**RDKH-130-01146**	RDCH-011-30029	RDTH-031-30024	RDRY-704-00148	5
0.4681 - 0.4878	11.89 - 12.39	1	**RDKH-210-01189**	**RDKH-110-01189**	RDCH-011-10030	RDTH-031-10025	RDRY-704-00148	5
0.4681 - 0.4878	11.89 - 12.39	2	**RDKH-220-01189**	**RDKH-120-01189**	RDCH-011-20030	RDTH-031-20025	RDRY-704-00148	5
0.4681 - 0.4878	11.89 - 12.39	3	**RDKH-230-01189**	**RDKH-130-01189**	RDCH-011-30030	RDTH-031-30025	RDRY-704-00148	5
0.4831 - 0.5028	12.27 - 12.77	1	**RDKH-210-01227**	**RDKH-110-01227**	RDCH-011-10031	RDTH-031-10028	RDRY-704-00148	5
0.4831 - 0.5028	12.27 - 12.77	2	**RDKH-220-01227**	**RDKH-120-01227**	RDCH-011-20031	RDTH-031-20028	RDRY-704-00148	5
0.4831 - 0.5028	12.27 - 12.77	3	**RDKH-230-01227**	**RDKH-130-01227**	RDCH-011-30031	RDTH-031-30028	RDRY-704-00148	5

NOTE: Each roller burnishing tool comes assembled complete with cage, cone, and rolls.

D: 42 - 45 | D: 40 - 41 | D: 38

Key on D: 1

A DRILLING
B BORING
C REAMING
D BURNISHING
E THREADING
X SPECIALS

Roller Burnishing Tools | Blind Holes

H Series | Diameter Range: 0.2319" - 0.5028" (5.89 mm - 12.77 mm)

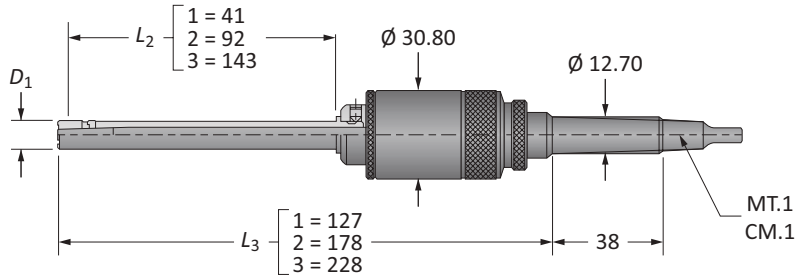

D_1			Part No.*		Spare Parts			
Imperial (in)	Metric (mm)	*L*	Assembly with Morse Taper Shank	Assembly with Straight Shank	Cage	Cone**	Rolls	Qty Rolls
0.2319 - 0.2524	5.89 - 6.41	1	**RSKH-210-xxxxx**	**RSKH-110-xxxxx**	RSCH-015-10015	RSTH-03x-10012	RSRY-708-00086	3
0.2319 - 0.2524	5.89 - 6.41	2	**RSKH-220-xxxxx**	**RSKH-120-xxxxx**	RSCH-015-20015	RSTH-03x-20012	RSRY-708-00086	3
0.2319 - 0.2524	5.89 - 6.41	3	**RSKH-230-xxxxx**	**RSKH-130-xxxxx**	RSCH-015-30015	RSTH-03x-30012	RSRY-708-00086	3
0.2484 - 0.2681	6.31 - 6.81	1	**RSKH-210-xxxxx**	**RSKH-110-xxxxx**	RSCH-015-10016	RSTH-03x-10013	RSRY-708-00086	3
0.2484 - 0.2681	6.31 - 6.81	2	**RSKH-220-xxxxx**	**RSKH-120-xxxxx**	RSCH-015-20016	RSTH-03x-20013	RSRY-708-00086	3
0.2484 - 0.2681	6.31 - 6.81	3	**RSKH-230-xxxxx**	**RSKH-130-xxxxx**	RSCH-015-30016	RSTH-03x-30013	RSRY-708-00086	3
0.2642 - 0.2839	6.71 - 7.21	1	**RSKH-210-xxxxx**	**RSKH-110-xxxxx**	RSCH-015-10017	RSTH-03x-10015	RSRY-708-00086	3
0.2642 - 0.2839	6.71 - 7.21	2	**RSKH-220-xxxxx**	**RSKH-120-xxxxx**	RSCH-015-20017	RSTH-03x-20015	RSRY-708-00086	3
0.2642 - 0.2839	6.71 - 7.21	3	**RSKH-230-xxxxx**	**RSKH-130-xxxxx**	RSCH-015-30017	RSTH-03x-30015	RSRY-708-00086	3
0.2803 - 0.3000	7.12 - 7.62	1	**RSKH-210-xxxxx**	**RSKH-110-xxxxx**	RSCH-015-10018	RSTH-03x-10017	RSRY-708-00086	3
0.2803 - 0.3000	7.12 - 7.62	2	**RSKH-220-xxxxx**	**RSKH-120-xxxxx**	RSCH-015-20018	RSTH-03x-20017	RSRY-708-00086	3
0.2803 - 0.3000	7.12 - 7.62	3	**RSKH-230-xxxxx**	**RSKH-130-xxxxx**	RSCH-015-30018	RSTH-03x-30017	RSRY-708-00086	3
0.2945 - 0.3142	7.48 - 7.98	1	**RSKH-210-xxxxx**	**RSKH-110-xxxxx**	RSCH-015-10019	RSTH-03x-10019	RSRY-708-00086	3
0.2945 - 0.3142	7.48 - 7.98	2	**RSKH-220-xxxxx**	**RSKH-120-xxxxx**	RSCH-015-20019	RSTH-03x-20019	RSRY-708-00086	3
0.2945 - 0.3142	7.48 - 7.98	3	**RSKH-230-xxxxx**	**RSKH-130-xxxxx**	RSCH-015-30019	RSTH-03x-30019	RSRY-708-00086	3
0.3102 - 0.3299	7.88 - 8.38	1	**RSKH-210-xxxxx**	**RSKH-110-xxxxx**	RSCH-015-10020	RSTH-03x-10021	RSRY-708-00086	3
0.3102 - 0.3299	7.88 - 8.38	2	**RSKH-220-xxxxx**	**RSKH-120-xxxxx**	RSCH-015-20020	RSTH-03x-20021	RSRY-708-00086	3
0.3102 - 0.3299	7.88 - 8.38	3	**RSKH-230-xxxxx**	**RSKH-130-xxxxx**	RSCH-015-30020	RSTH-03x-30021	RSRY-708-00086	3
0.3260 - 0.3461	8.28 - 8.79	1	**RSKH-210-xxxxx**	**RSKH-110-xxxxx**	RSCH-015-10021	RSTH-03x-10024	RSRY-708-00086	3
0.3260 - 0.3461	8.28 - 8.79	2	**RSKH-220-xxxxx**	**RSKH-120-xxxxx**	RSCH-015-20021	RSTH-03x-20024	RSRY-708-00086	3
0.3260 - 0.3461	8.28 - 8.79	3	**RSKH-230-xxxxx**	**RSKH-130-xxxxx**	RSCH-015-30021	RSTH-03x-30024	RSRY-708-00086	3
0.3410 - 0.3606	8.66 - 9.16	1	**RSKH-210-xxxxx**	**RSKH-110-xxxxx**	RSCH-015-10022	RSTH-03x-10015	RSRY-708-00125	3
0.3410 - 0.3606	8.66 - 9.16	2	**RSKH-220-xxxxx**	**RSKH-120-xxxxx**	RSCH-015-20022	RSTH-03x-20015	RSRY-708-00125	3
0.3410 - 0.3606	8.66 - 9.16	3	**RSKH-230-xxxxx**	**RSKH-130-xxxxx**	RSCH-015-30022	RSTH-03x-30015	RSRY-708-00125	3
0.3567 - 0.3768	9.06 - 9.57	1	**RSKH-210-xxxxx**	**RSKH-110-xxxxx**	RSCH-015-10023	RSTH-03x-10017	RSRY-708-00125	3
0.3567 - 0.3768	9.06 - 9.57	2	**RSKH-220-xxxxx**	**RSKH-120-xxxxx**	RSCH-015-20023	RSTH-03x-20017	RSRY-708-00125	3
0.3567 - 0.3768	9.06 - 9.57	3	**RSKH-230-xxxxx**	**RSKH-130-xxxxx**	RSCH-015-30023	RSTH-03x-30017	RSRY-708-00125	3

*xxxxx = Indicate to 2 metric decimal places the size to be burnished (e.g. short series roller burnisher Ø 10.25 mm with MT.1 shank: RSKH-210-01025).
**x = A number that will vary from 2 to 8 depending upon the exact diameter to be burnished. See page D: 6 for the correct identification of the "x" value.
NOTE: Each roller burnishing tool comes assembled complete with cage, cone, and rolls.

D: 42 - 45
Key on D: 1
D: 40 - 41
D: 39

Roller Burnishing Tools | Blind Holes (continued)

H Series | Diameter Range: 0.2319" - 0.5028" (5.89 mm - 12.77 mm)

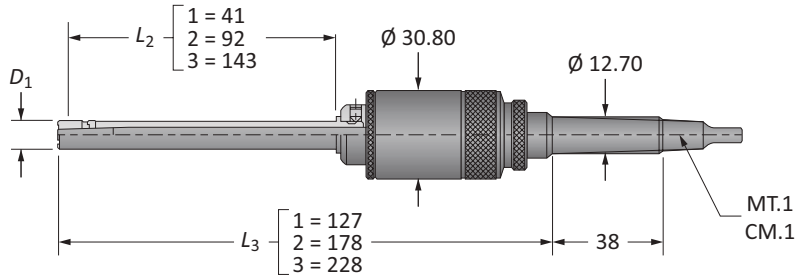

D_1			Part No.*		Spare Parts			
Imperial (in)	Metric (mm)	*L*	Assembly with Morse Taper Shank	Assembly with Straight Shank	Cage	Cone**	Rolls	Qty Rolls
0.3732 - 0.3933	9.48 - 9.99	1	**RSKH-210-xxxxx**	**RSKH-110-xxxxx**	RSCH-015-10024	RSTH-03x-10019	RSRY-708-00125	3
0.3732 - 0.3933	9.48 - 9.99	2	**RSKH-220-xxxxx**	**RSKH-120-xxxxx**	RSCH-015-20024	RSTH-03x-20019	RSRY-708-00125	3
0.3732 - 0.3933	9.48 - 9.99	3	**RSKH-230-xxxxx**	**RSKH-130-xxxxx**	RSCH-015-30024	RSTH-03x-30019	RSRY-708-00125	3
0.3902 - 0.4102	9.91 - 10.42	1	**RSKH-210-xxxxx**	**RSKH-110-xxxxx**	RSCH-015-10025	RSTH-03x-10021	RSRY-708-00125	3
0.3902 - 0.4102	9.91 - 10.42	2	**RSKH-220-xxxxx**	**RSKH-120-xxxxx**	RSCH-015-20025	RSTH-03x-20021	RSRY-708-00125	3
0.3902 - 0.4102	9.91 - 10.42	3	**RSKH-230-xxxxx**	**RSKH-130-xxxxx**	RSCH-015-30025	RSTH-03x-30021	RSRY-708-00125	3
0.4051 - 0.4252	10.29 - 10.80	1	**RSKH-210-xxxxx**	**RSKH-110-xxxxx**	RSCH-015-10026	RSTH-03x-10024	RSRY-708-00125	3
0.4051 - 0.4252	10.29 - 10.80	2	**RSKH-220-xxxxx**	**RSKH-120-xxxxx**	RSCH-015-20026	RSTH-03x-20024	RSRY-708-00125	3
0.4051 - 0.4252	10.29 - 10.80	3	**RSKH-230-xxxxx**	**RSKH-130-xxxxx**	RSCH-015-30026	RSTH-03x-30024	RSRY-708-00125	3
0.4217 - 0.4413	10.71 - 11.21	1	**RSKH-210-xxxxx**	**RSKH-110-xxxxx**	RSCH-015-10027	RSTH-03x-10025	RSRY-708-00125	3
0.4217 - 0.4413	10.71 - 11.21	2	**RSKH-220-xxxxx**	**RSKH-120-xxxxx**	RSCH-015-20027	RSTH-03x-20025	RSRY-708-00125	3
0.4217 - 0.4413	10.71 - 11.21	3	**RSKH-230-xxxxx**	**RSKH-130-xxxxx**	RSCH-015-30027	RSTH-03x-30025	RSRY-708-00125	3
0.4374 - 0.4571	11.11 - 11.61	1	**RSKH-210-xxxxx**	**RSKH-110-xxxxx**	RSCH-015-10028	RSTH-03x-10028	RSRY-708-00125	3
0.4374 - 0.4571	11.11 - 11.61	2	**RSKH-220-xxxxx**	**RSKH-120-xxxxx**	RSCH-015-20028	RSTH-03x-20028	RSRY-708-00125	3
0.4374 - 0.4571	11.11 - 11.61	3	**RSKH-230-xxxxx**	**RSKH-130-xxxxx**	RSCH-015-30028	RSTH-03x-30028	RSRY-708-00125	3
0.4512 - 0.4709	11.46 - 11.96	1	**RSKH-210-xxxxx**	**RSKH-110-xxxxx**	RSCH-015-10029	RSTH-03x-10021	RSRY-708-00156	3
0.4512 - 0.4709	11.46 - 11.96	2	**RSKH-220-xxxxx**	**RSKH-120-xxxxx**	RSCH-015-20029	RSTH-03x-20021	RSRY-708-00156	3
0.4512 - 0.4709	11.46 - 11.96	3	**RSKH-230-xxxxx**	**RSKH-130-xxxxx**	RSCH-015-30029	RSTH-03x-30021	RSRY-708-00156	3
0.4681 - 0.4878	11.89 - 12.39	1	**RSKH-210-xxxxx**	**RSKH-110-xxxxx**	RSCH-015-10030	RSTH-03x-10024	RSRY-708-00156	3
0.4681 - 0.4878	11.89 - 12.39	2	**RSKH-220-xxxxx**	**RSKH-120-xxxxx**	RSCH-015-20030	RSTH-03x-20024	RSRY-708-00156	3
0.4681 - 0.4878	11.89 - 12.39	3	**RSKH-230-xxxxx**	**RSKH-130-xxxxx**	RSCH-015-30030	RSTH-03x-30024	RSRY-708-00156	3
0.4831 - 0.5028	12.27 - 12.77	1	**RSKH-210-xxxxx**	**RSKH-110-xxxxx**	RSCH-015-10031	RSTH-03x-10025	RSRY-708-00156	3
0.4831 - 0.5028	12.27 - 12.77	2	**RSKH-220-xxxxx**	**RSKH-120-xxxxx**	RSCH-015-20031	RSTH-03x-20025	RSRY-708-00156	3
0.4831 - 0.5028	12.27 - 12.77	3	**RSKH-230-xxxxx**	**RSKH-130-xxxxx**	RSCH-015-30031	RSTH-03x-30025	RSRY-708-00156	3

*xxxxx = Indicate to 2 metric decimal places the size to be burnished (e.g. short series roller burnisher Ø 10.25 mm with MT.1 shank: RSKH-210-01025).
**x = A number that will vary from 2 to 8 depending upon the exact diameter to be burnished. See page D: 6 for the correct identification of the "x" value.
NOTE: Each roller burnishing tool comes assembled complete with cage, cone, and rolls.

D: 42 - 45 D: 40 - 41 D: 39
Key on D: 1

Roller Burnishing Tools | Through Holes

I Series | Diameter Range: 0.4976" - 0.6634" (12.64 mm - 16.85 mm)

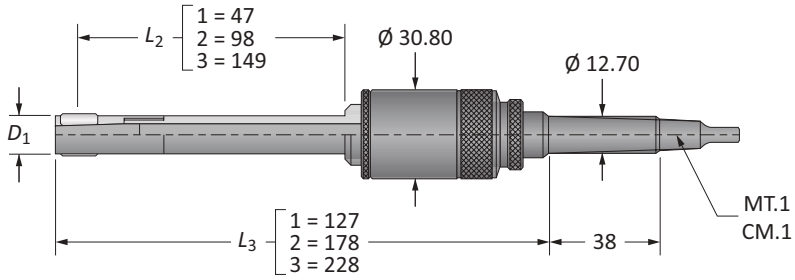

D_1			Part No.		Spare Parts			
Imperial (in)	Metric (mm)	L	Assembly with Morse Taper Shank	Assembly with Straight Shank	Cage	Cone	Rolls	Qty Rolls
0.4976 - 0.5315	12.64 - 13.50	1	**RDKI-210-01264**	**RDKI-110-01264**	RDCI-400-00500	RDTI-031-10032	RDRY-704-00156	5
0.4976 - 0.5315	12.64 - 13.50	2	**RDKI-220-01264**	**RDKI-120-01264**	RDCI-400-00500	RDTI-031-20032	RDRY-704-00156	5
0.4976 - 0.5315	12.64 - 13.50	3	**RDKI-230-01264**	**RDKI-130-01264**	RDCI-400-00500	RDTI-031-30032	RDRY-704-00156	5
0.5295 - 0.5689	13.45 - 14.45	1	**RDKI-210-01345**	**RDKI-110-01345**	RDCI-400-00531	RDTI-031-10034	RDRY-704-00156	5
0.5295 - 0.5689	13.45 - 14.45	2	**RDKI-220-01345**	**RDKI-120-01345**	RDCI-400-00531	RDTI-031-20034	RDRY-704-00156	5
0.5295 - 0.5689	13.45 - 14.45	3	**RDKI-230-01345**	**RDKI-130-01345**	RDCI-400-00531	RDTI-031-30034	RDRY-704-00156	5
0.5610 - 0.6004	14.25 - 15.25	1	**RDKI-210-01425**	**RDKI-110-01425**	RDCI-400-00562	RDTI-031-10034	RDRY-704-00172	5
0.5610 - 0.6004	14.25 - 15.25	2	**RDKI-220-01425**	**RDKI-120-01425**	RDCI-400-00562	RDTI-031-20034	RDRY-704-00172	5
0.5610 - 0.6004	14.25 - 15.25	3	**RDKI-230-01425**	**RDKI-130-01425**	RDCI-400-00562	RDTI-031-30034	RDRY-704-00172	5
0.5925 - 0.6319	15.05 - 16.05	1	**RDKI-210-01505**	**RDKI-110-01505**	RDCI-400-00593	RDTI-031-10038	RDRY-704-00172	5
0.5925 - 0.6319	15.05 - 16.05	2	**RDKI-220-01505**	**RDKI-120-01505**	RDCI-400-00593	RDTI-031-20038	RDRY-704-00172	5
0.5925 - 0.6319	15.05 - 16.05	3	**RDKI-230-01505**	**RDKI-130-01505**	RDCI-400-00593	RDTI-031-30038	RDRY-704-00172	5
0.6240 - 0.6634	15.85 - 16.85	1	**RDKI-210-01585**	**RDKI-110-01585**	RDCI-400-00625	RDTI-031-10038	RDRY-701-00187	5
0.6240 - 0.6634	15.85 - 16.85	2	**RDKI-220-01585**	**RDKI-120-01585**	RDCI-400-00625	RDTI-031-20038	RDRY-701-00187	5
0.6240 - 0.6634	15.85 - 16.85	3	**RDKI-230-01585**	**RDKI-130-01585**	RDCI-400-00625	RDTI-031-30038	RDRY-701-00187	5

NOTE: Each roller burnishing tool comes assembled complete with cage, cone, and rolls.

D: 42 - 45 D: 40 - 41 D: 38

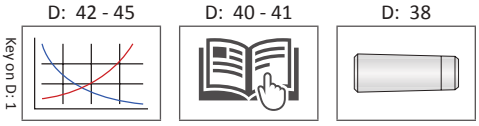

Roller Burnishing Tools | Blind Holes

I Series | Diameter Range: 0.4976" - 0.6634" (12.64 mm - 16.85 mm)

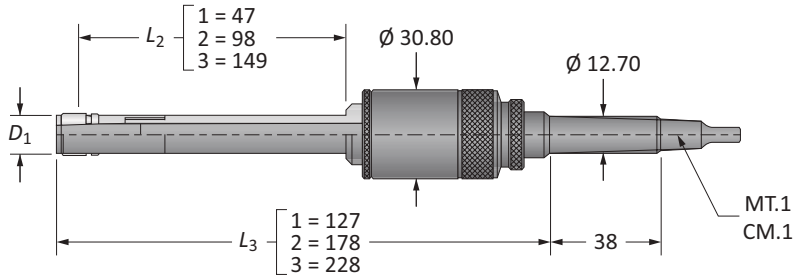

D_1			Part No.*		Spare Parts			
Imperial (in)	Metric (mm)	*L*	Assembly with Morse Taper Shank	Assembly with Straight Shank	Cage	Cone**	Rolls	Qty Rolls
0.4976 - 0.5315	12.64 - 13.50	1	**RSKI-210-xxxxx**	**RSKI-110-xxxxx**	RSCI-400-00500	RSTI-03X-10032	RSRY-708-00156	5
0.4976 - 0.5315	12.64 - 13.50	2	**RSKI-220-xxxxx**	**RSKI-120-xxxxx**	RSCI-400-00500	RSTI-03X-20032	RSRY-708-00156	5
0.4976 - 0.5315	12.64 - 13.50	3	**RSKI-230-xxxxx**	**RSKI-130-xxxxx**	RSCI-400-00500	RSTI-03X-30032	RSRY-708-00156	5
0.5295 - 0.5689	13.45 - 14.45	1	**RSKI-210-xxxxx**	**RSKI-110-xxxxx**	RSCI-400-00531	RSTI-03X-10034	RSRY-708-00156	5
0.5295 - 0.5689	13.45 - 14.45	2	**RSKI-220-xxxxx**	**RSKI-120-xxxxx**	RSCI-400-00531	RSTI-03X-20034	RSRY-708-00156	5
0.5295 - 0.5689	13.45 - 14.45	3	**RSKI-230-xxxxx**	**RSKI-130-xxxxx**	RSCI-400-00531	RSTI-03X-30034	RSRY-708-00156	5
0.5610 - 0.6004	14.25 - 15.25	1	**RSKI-210-xxxxx**	**RSKI-110-xxxxx**	RSCI-400-00562	RSTI-03X-10034	RSRY-708-00172	5
0.5610 - 0.6004	14.25 - 15.25	2	**RSKI-220-xxxxx**	**RSKI-120-xxxxx**	RSCI-400-00562	RSTI-03X-20034	RSRY-708-00172	5
0.5610 - 0.6004	14.25 - 15.25	3	**RSKI-230-xxxxx**	**RSKI-130-xxxxx**	RSCI-400-00562	RSTI-03X-30034	RSRY-708-00172	5
0.5925 - 0.6319	15.05 - 16.05	1	**RSKI-210-xxxxx**	**RSKI-110-xxxxx**	RSCI-400-00593	RSTI-03X-10038	RSRY-708-00172	5
0.5925 - 0.6319	15.05 - 16.05	2	**RSKI-220-xxxxx**	**RSKI-120-xxxxx**	RSCI-400-00593	RSTI-03X-20038	RSRY-708-00172	5
0.5925 - 0.6319	15.05 - 16.05	3	**RSKI-230-xxxxx**	**RSKI-130-xxxxx**	RSCI-400-00593	RSTI-03X-30038	RSRY-708-00172	5
0.6240 - 0.6634	15.85 - 16.85	1	**RSKI-210-xxxxx**	**RSKI-110-xxxxx**	RSCI-400-00625	RSTI-03X-10038	RSRY-708-00187	5
0.6240 - 0.6634	15.85 - 16.85	2	**RSKI-220-xxxxx**	**RSKI-120-xxxxx**	RSCI-400-00625	RSTI-03X-20038	RSRY-708-00187	5
0.6240 - 0.6634	15.85 - 16.85	3	**RSKI-230-xxxxx**	**RSKI-130-xxxxx**	RSCI-400-00625	RSTI-03X-30038	RSRY-708-00187	5

*xxxxx = Indicate to 2 metric decimal places the size to be burnished (e.g. long series roller burnisher Ø 14.00 mm with MT.1 shank: RSKI-230-01400).
**x = A number that will vary from 2 to 8 depending upon the exact diameter to be burnished. See page D: 6 for the correct identification of the "x" value.
NOTE: Each roller burnishing tool comes assembled complete with cage, cone, and rolls.

D: 42 - 45
Key on D: 1
D: 40 - 41
D: 39

A DRILLING
B BORING
C REAMING
D BURNISHING
E THREADING
X SPECIALS

Roller Burnishing Tools | Through Holes

K Series | Diameter Range: 0.6535" - 0.9740" (16.60 mm - 24.74 mm)

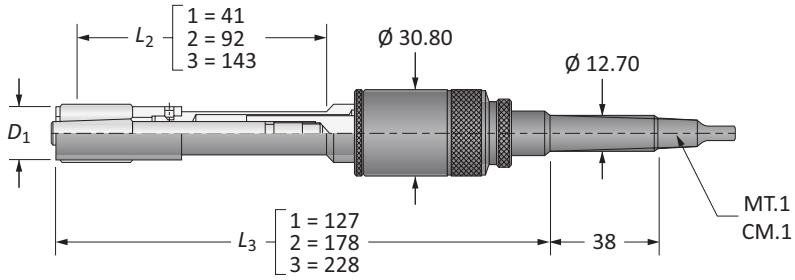

D_1			Part No.		Spare Parts			
Imperial (in)	Metric (mm)	*L*	Assembly with Morse Taper Shank	Assembly with Straight Shank	Cage	Cone	Rolls	Qty Rolls
0.6535 - 0.6933	16.60 - 17.61	1	**RDKK-210-01660**	**RDKK-110-01660**	RDCK-011-00042	RDTK-031-00042	RDRY-701-00187	5
0.6535 - 0.6933	16.60 - 17.61	2	**RDKK-220-01660**	**RDKK-120-01660**	RDCK-011-00042	RDTK-031-00042	RDRY-701-00187	5
0.6535 - 0.6933	16.60 - 17.61	3	**RDKK-230-01660**	**RDKK-130-01660**	RDCK-011-00042	RDTK-031-00042	RDRY-701-00187	5
0.6850 - 0.7240	17.40 - 18.39	1	**RDKK-210-01740**	**RDKK-110-01740**	RDCK-011-00044	RDTK-031-00044	RDRY-701-00187	5
0.6850 - 0.7240	17.40 - 18.39	2	**RDKK-220-01740**	**RDKK-120-01740**	RDCK-011-00044	RDTK-031-00044	RDRY-701-00187	5
0.6850 - 0.7240	17.40 - 18.39	3	**RDKK-230-01740**	**RDKK-130-01740**	RDCK-011-00044	RDTK-031-00044	RDRY-701-00187	5
0.7161 - 0.7551	18.19 - 19.18	1	**RDKK-210-01819**	**RDKK-110-01819**	RDCK-011-00046	RDTK-031-00042	RDRY-701-00218	5
0.7161 - 0.7551	18.19 - 19.18	2	**RDKK-220-01819**	**RDKK-120-01819**	RDCK-011-00046	RDTK-031-00042	RDRY-701-00218	5
0.7161 - 0.7551	18.19 - 19.18	3	**RDKK-230-01819**	**RDKK-130-01819**	RDCK-011-00046	RDTK-031-00042	RDRY-701-00218	5
0.7465 - 0.7870	18.96 - 19.99	1	**RDKK-210-01896**	**RDKK-110-01896**	RDCK-011-00048	RDTK-031-00044	RDRY-701-00218	5
0.7465 - 0.7870	18.96 - 19.99	2	**RDKK-220-01896**	**RDKK-120-01896**	RDCK-011-00048	RDTK-031-00044	RDRY-701-00218	5
0.7465 - 0.7870	18.96 - 19.99	3	**RDKK-230-01896**	**RDKK-130-01896**	RDCK-011-00048	RDTK-031-00044	RDRY-701-00218	5
0.7772 - 0.8177	19.74 - 20.77	1	**RDKK-210-01974**	**RDKK-110-01974**	RDCK-011-00050	RDTK-031-00050	RDRY-701-00218	5
0.7772 - 0.8177	19.74 - 20.77	2	**RDKK-220-01974**	**RDKK-120-01974**	RDCK-011-00050	RDTK-031-00050	RDRY-701-00218	5
0.7772 - 0.8177	19.74 - 20.77	3	**RDKK-230-01974**	**RDKK-130-01974**	RDCK-011-00050	RDTK-031-00050	RDRY-701-00218	5
0.8079 - 0.8492	20.52 - 21.57	1	**RDKK-210-02052**	**RDKK-110-02052**	RDCK-011-00052	RDTK-031-00052	RDRY-701-00218	5
0.8079 - 0.8492	20.52 - 21.57	2	**RDKK-220-02052**	**RDKK-120-02052**	RDCK-011-00052	RDTK-031-00052	RDRY-701-00218	5
0.8079 - 0.8492	20.52 - 21.57	3	**RDKK-230-02052**	**RDKK-130-02052**	RDCK-011-00052	RDTK-031-00052	RDRY-701-00218	5
0.8390 - 0.8799	21.31 - 22.35	1	**RDKK-210-02131**	**RDKK-110-02131**	RDCK-011-00054	RDTK-031-00054	RDRY-701-00218	5
0.8390 - 0.8799	21.31 - 22.35	2	**RDKK-220-02131**	**RDKK-120-02131**	RDCK-011-00054	RDTK-031-00054	RDRY-701-00218	5
0.8390 - 0.8799	21.31 - 22.35	3	**RDKK-230-02131**	**RDKK-130-02131**	RDCK-011-00054	RDTK-031-00054	RDRY-701-00218	5
0.8713 - 0.9118	22.13 - 23.16	1	**RDKK-210-02213**	**RDKK-110-02213**	RDCK-011-00056	RDTK-031-00050	RDRY-701-00265	5
0.8713 - 0.9118	22.13 - 23.16	2	**RDKK-220-02213**	**RDKK-120-02213**	RDCK-011-00056	RDTK-031-00050	RDRY-701-00265	5
0.8713 - 0.9118	22.13 - 23.16	3	**RDKK-230-02213**	**RDKK-130-02213**	RDCK-011-00056	RDTK-031-00050	RDRY-701-00265	5
0.9020 - 0.9433	22.91 - 23.96	1	**RDKK-210-02291**	**RDKK-110-02291**	RDCK-011-00058	RDTK-031-00052	RDRY-701-00265	5
0.9020 - 0.9433	22.91 - 23.96	2	**RDKK-220-02291**	**RDKK-120-02291**	RDCK-011-00058	RDTK-031-00052	RDRY-701-00265	5
0.9020 - 0.9433	22.91 - 23.96	3	**RDKK-230-02291**	**RDKK-130-02291**	RDCK-011-00058	RDTK-031-00052	RDRY-701-00265	5
0.9331 - 0.9740	23.70 - 24.74	1	**RDKK-210-02370**	**RDKK-110-02370**	RDCK-011-00060	RDTK-031-00054	RDRY-701-00265	5
0.9331 - 0.9740	23.70 - 24.74	2	**RDKK-220-02370**	**RDKK-120-02370**	RDCK-011-00060	RDTK-031-00054	RDRY-701-00265	5
0.9331 - 0.9740	23.70 - 24.74	3	**RDKK-230-02370**	**RDKK-130-02370**	RDCK-011-00060	RDTK-031-00054	RDRY-701-00265	5

NOTE: Each roller burnishing tool comes assembled complete with cage, cone, and rolls.

D: 42 - 45

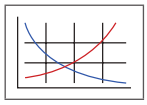

D: 40 - 41

D: 38

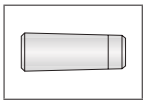

Roller Burnishing Tools | Blind Holes

K Series | Diameter Range: 0.6535" - 0.9740" (16.60 mm - 24.74 mm)

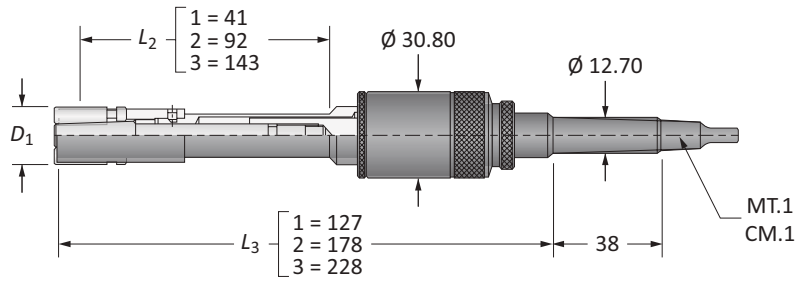

D_1			Part No.*		Spare Parts			
Imperial (in)	Metric (mm)	*L*	Assembly with Morse Taper Shank	Assembly with Straight Shank	Cage	Cone**	Rolls	Qty Rolls
0.6535 - 0.6933	16.60 - 17.61	1	**RSKK-210-xxxxx**	**RSKK-110-xxxxx**	RSCK-015-00042	RSTK-03x-00042	RSRY-708-00187	5
0.6535 - 0.6933	16.60 - 17.61	2	**RSKK-220-xxxxx**	**RSKK-120-xxxxx**	RSCK-015-00042	RSTK-03x-00042	RSRY-708-00187	5
0.6535 - 0.6933	16.60 - 17.61	3	**RSKK-230-xxxxx**	**RSKK-130-xxxxx**	RSCK-015-00042	RSTK-03x-00042	RSRY-708-00187	5
0.6850 - 0.7240	17.40 - 18.39	1	**RSKK-210-xxxxx**	**RSKK-110-xxxxx**	RSCK-015-00044	RSTK-03x-00044	RSRY-708-00187	5
0.6850 - 0.7240	17.40 - 18.39	2	**RSKK-220-xxxxx**	**RSKK-120-xxxxx**	RSCK-015-00044	RSTK-03x-00044	RSRY-708-00187	5
0.6850 - 0.7240	17.40 - 18.39	3	**RSKK-230-xxxxx**	**RSKK-130-xxxxx**	RSCK-015-00044	RSTK-03x-00044	RSRY-708-00187	5
0.7161 - 0.7551	18.19 - 19.18	1	**RSKK-210-xxxxx**	**RSKK-110-xxxxx**	RSCK-015-00046	RSTK-03x-00042	RSRY-708-00218	5
0.7161 - 0.7551	18.19 - 19.18	2	**RSKK-220-xxxxx**	**RSKK-120-xxxxx**	RSCK-015-00046	RSTK-03x-00042	RSRY-708-00218	5
0.7161 - 0.7551	18.19 - 19.18	3	**RSKK-230-xxxxx**	**RSKK-130-xxxxx**	RSCK-015-00046	RSTK-03x-00042	RSRY-708-00218	5
0.7465 - 0.7870	18.96 - 19.99	1	**RSKK-210-xxxxx**	**RSKK-110-xxxxx**	RSCK-015-00048	RSTK-03x-00044	RSRY-708-00218	5
0.7465 - 0.7870	18.96 - 19.99	2	**RSKK-220-xxxxx**	**RSKK-120-xxxxx**	RSCK-015-00048	RSTK-03x-00044	RSRY-708-00218	5
0.7465 - 0.7870	18.96 - 19.99	3	**RSKK-230-xxxxx**	**RSKK-130-xxxxx**	RSCK-015-00048	RSTK-03x-00044	RSRY-708-00218	5
0.7772 - 0.8177	19.74 - 20.77	1	**RSKK-210-xxxxx**	**RSKK-110-xxxxx**	RSCK-015-00050	RSTK-03x-00050	RSRY-708-00218	5
0.7772 - 0.8177	19.74 - 20.77	2	**RSKK-220-xxxxx**	**RSKK-120-xxxxx**	RSCK-015-00050	RSTK-03x-00050	RSRY-708-00218	5
0.7772 - 0.8177	19.74 - 20.77	3	**RSKK-230-xxxxx**	**RSKK-130-xxxxx**	RSCK-015-00050	RSTK-03x-00050	RSRY-708-00218	5
0.8079 - 0.8492	20.52 - 21.57	1	**RSKK-210-xxxxx**	**RSKK-110-xxxxx**	RSCK-015-00052	RSTK-03x-00052	RSRY-708-00218	5
0.8079 - 0.8492	20.52 - 21.57	2	**RSKK-220-xxxxx**	**RSKK-120-xxxxx**	RSCK-015-00052	RSTK-03x-00052	RSRY-708-00218	5
0.8079 - 0.8492	20.52 - 21.57	3	**RSKK-230-xxxxx**	**RSKK-130-xxxxx**	RSCK-015-00052	RSTK-03x-00052	RSRY-708-00218	5
0.8390 - 0.8799	21.31 - 22.35	1	**RSKK-210-xxxxx**	**RSKK-110-xxxxx**	RSCK-015-00054	RSTK-03x-00054	RSRY-708-00218	5
0.8390 - 0.8799	21.31 - 22.35	2	**RSKK-220-xxxxx**	**RSKK-120-xxxxx**	RSCK-015-00054	RSTK-03x-00054	RSRY-708-00218	5
0.8390 - 0.8799	21.31 - 22.35	3	**RSKK-230-xxxxx**	**RSKK-130-xxxxx**	RSCK-015-00054	RSTK-03x-00054	RSRY-708-00218	5
0.8713 - 0.9118	22.13 - 23.16	1	**RSKK-210-xxxxx**	**RSKK-110-xxxxx**	RSCK-015-00056	RSTK-03x-00050	RSRY-708-00265	5
0.8713 - 0.9118	22.13 - 23.16	2	**RSKK-220-xxxxx**	**RSKK-120-xxxxx**	RSCK-015-00056	RSTK-03x-00050	RSRY-708-00265	5
0.8713 - 0.9118	22.13 - 23.16	3	**RSKK-230-xxxxx**	**RSKK-130-xxxxx**	RSCK-015-00056	RSTK-03x-00050	RSRY-708-00265	5
0.9020 - 0.9433	22.91 - 23.96	1	**RSKK-210-xxxxx**	**RSKK-110-xxxxx**	RSCK-015-00058	RSTK-03x-00052	RSRY-708-00265	5
0.9020 - 0.9433	22.91 - 23.96	2	**RSKK-220-xxxxx**	**RSKK-120-xxxxx**	RSCK-015-00058	RSTK-03x-00052	RSRY-708-00265	5
0.9020 - 0.9433	22.91 - 23.96	3	**RSKK-230-xxxxx**	**RSKK-130-xxxxx**	RSCK-015-00058	RSTK-03x-00052	RSRY-708-00265	5
0.9331 - 0.9740	23.70 - 24.74	1	**RSKK-210-xxxxx**	**RSKK-110-xxxxx**	RSCK-015-00060	RSTK-03x-00054	RSRY-708-00265	5
0.9331 - 0.9740	23.70 - 24.74	2	**RSKK-220-xxxxx**	**RSKK-120-xxxxx**	RSCK-015-00060	RSTK-03x-00054	RSRY-708-00265	5
0.9331 - 0.9740	23.70 - 24.74	3	**RSKK-230-xxxxx**	**RSKK-130-xxxxx**	RSCK-015-00060	RSTK-03x-00054	RSRY-708-00265	5

*xxxxx = Indicate to 2 metric decimal places the size to be burnished (e.g. standard series roller burnisher Ø 20.00 mm with MT.1 shank: RSKK-120-02000).
**x = A number that will vary from 2 to 8 depending upon the exact diameter to be burnished. See page D: 6 for the correct identification of the "x" value.
NOTE: Each roller burnishing tool comes assembled complete with cage, cone, and rolls.

D: 42 - 45 | D: 40 - 41 | D: 39

Key on D: 1

Roller Burnishing Tools | Through Holes

L Series | Diameter Range: 0.9661" - 1.2268" (24.54 mm - 31.16 mm)

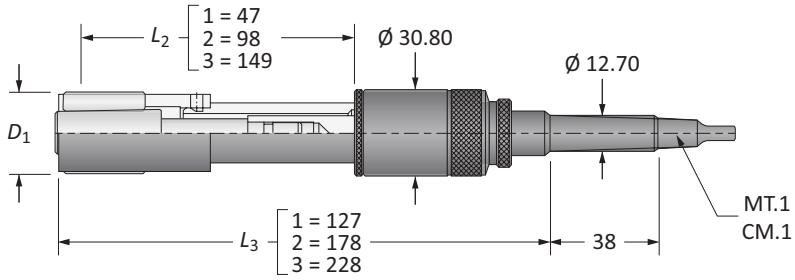

D_1			Part No.		Spare Parts			
Imperial (in)	Metric (mm)	L	Assembly with Morse Taper Shank	Assembly with Straight Shank	Cage	Cone	Rolls	Qty Rolls
0.9661 - 1.0075	24.54 - 25.59	1	**RDKL-210-02454**	**RDKL-110-02454**	RDCL-011-00062	RDTL-031-00062	RDRY-701-00265	5
0.9661 - 1.0075	24.54 - 25.59	2	**RDKL-220-02454**	**RDKL-120-02454**	RDCL-011-00062	RDTL-031-00062	RDRY-701-00265	5
0.9661 - 1.0075	24.54 - 25.59	3	**RDKL-230-02454**	**RDKL-130-02454**	RDCL-011-00062	RDTL-031-00062	RDRY-701-00265	5
0.9992 - 1.0402	25.38 - 26.42	1	**RDKL-210-02538**	**RDKL-110-02538**	RDCL-011-00064	RDTL-031-00064	RDRY-701-00265	7
0.9992 - 1.0402	25.38 - 26.42	2	**RDKL-220-02538**	**RDKL-120-02538**	RDCL-011-00064	RDTL-031-00064	RDRY-701-00265	7
0.9992 - 1.0402	25.38 - 26.42	3	**RDKL-230-02538**	**RDKL-130-02538**	RDCL-011-00064	RDTL-031-00064	RDRY-701-00265	7
1.0299 - 1.0709	26.16 - 27.20	1	**RDKL-210-02616**	**RDKL-110-02616**	RDCL-011-00066	RDTL-031-00066	RDRY-701-00265	7
1.0299 - 1.0709	26.16 - 27.20	2	**RDKL-220-02616**	**RDKL-120-02616**	RDCL-011-00066	RDTL-031-00066	RDRY-701-00265	7
1.0299 - 1.0709	26.16 - 27.20	3	**RDKL-230-02616**	**RDKL-130-02616**	RDCL-011-00066	RDTL-031-00066	RDRY-701-00265	7
1.0610 - 1.1024	26.95 - 28.00	1	**RDKL-210-02695**	**RDKL-110-02695**	RDCL-011-00068	RDTL-031-00068	RDRY-701-00265	7
1.0610 - 1.1024	26.95 - 28.00	2	**RDKL-220-02695**	**RDKL-120-02695**	RDCL-011-00068	RDTL-031-00068	RDRY-701-00265	7
1.0610 - 1.1024	26.95 - 28.00	3	**RDKL-230-02695**	**RDKL-130-02695**	RDCL-011-00068	RDTL-031-00068	RDRY-701-00265	7
1.0917 - 1.1327	27.73 - 28.77	1	**RDKL-210-02773**	**RDKL-110-02773**	RDCL-011-00070	RDTL-031-00070	RDRY-701-00265	7
1.0917 - 1.1327	27.73 - 28.77	2	**RDKL-220-02773**	**RDKL-120-02773**	RDCL-011-00070	RDTL-031-00070	RDRY-701-00265	7
1.0917 - 1.1327	27.73 - 28.77	3	**RDKL-230-02773**	**RDKL-130-02773**	RDCL-011-00070	RDTL-031-00070	RDRY-701-00265	7
1.1240 - 1.1650	28.55 - 29.59	1	**RDKL-210-02855**	**RDKL-110-02855**	RDCL-011-00072	RDTL-031-00066	RDRY-701-00312	7
1.1240 - 1.1650	28.55 - 29.59	2	**RDKL-220-02855**	**RDKL-120-02855**	RDCL-011-00072	RDTL-031-00066	RDRY-701-00312	7
1.1240 - 1.1650	28.55 - 29.59	3	**RDKL-230-02855**	**RDKL-130-02855**	RDCL-011-00072	RDTL-031-00066	RDRY-701-00312	7
1.1551 - 1.1965	29.34 - 30.39	1	**RDKL-210-02934**	**RDKL-110-02934**	RDCL-011-00074	RDTL-031-00068	RDRY-701-00312	7
1.1551 - 1.1965	29.34 - 30.39	2	**RDKL-220-02934**	**RDKL-120-02934**	RDCL-011-00074	RDTL-031-00068	RDRY-701-00312	7
1.1551 - 1.1965	29.34 - 30.39	3	**RDKL-230-02934**	**RDKL-130-02934**	RDCL-011-00074	RDTL-031-00068	RDRY-701-00312	7
1.1858 - 1.2268	30.12 - 31.16	1	**RDKL-210-03012**	**RDKL-110-03012**	RDCL-011-00076	RDTL-031-00070	RDRY-701-00312	7
1.1858 - 1.2268	30.12 - 31.16	2	**RDKL-220-03012**	**RDKL-120-03012**	RDCL-011-00076	RDTL-031-00070	RDRY-701-00312	7
1.1858 - 1.2268	30.12 - 31.16	3	**RDKL-230-03012**	**RDKL-130-03012**	RDCL-011-00076	RDTL-031-00070	RDRY-701-00312	7

NOTE: Each roller burnishing tool comes assembled complete with cage, cone, and rolls.

D: 42 - 45

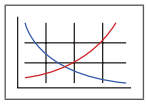

D: 40 - 41

D: 38

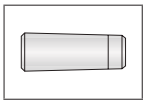

Roller Burnishing Tools | Blind Holes

L Series | Diameter Range: 0.9661" - 1.2268" (24.54 mm - 31.16 mm)

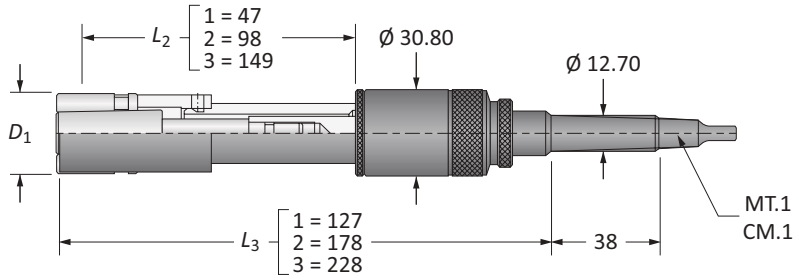

D_1			Part No.*		Spare Parts			
Imperial (in)	Metric (mm)	*L*	Assembly with Morse Taper Shank	Assembly with Straight Shank	Cage	Cone**	Rolls	Qty Rolls
0.9661 - 1.0075	24.54 - 25.59	1	**RSKL-210-xxxxx**	**RSKL-110-xxxxx**	RSCL-015-00062	RSTL-03x-00062	RSRY-708-00265	5
0.9661 - 1.0075	24.54 - 25.59	2	**RSKL-220-xxxxx**	**RSKL-120-xxxxx**	RSCL-015-00062	RSTL-03x-00062	RSRY-708-00265	5
0.9661 - 1.0075	24.54 - 25.59	3	**RSKL-230-xxxxx**	**RSKL-130-xxxxx**	RSCL-015-00062	RSTL-03x-00062	RSRY-708-00265	5
0.9992 - 1.0402	25.38 - 26.42	1	**RSKL-210-xxxxx**	**RSKL-110-xxxxx**	RSCL-015-00064	RSTL-03x-00064	RSRY-708-00265	5
0.9992 - 1.0402	25.38 - 26.42	2	**RSKL-220-xxxxx**	**RSKL-120-xxxxx**	RSCL-015-00064	RSTL-03x-00064	RSRY-708-00265	5
0.9992 - 1.0402	25.38 - 26.42	3	**RSKL-230-xxxxx**	**RSKL-130-xxxxx**	RSCL-015-00064	RSTL-03x-00064	RSRY-708-00265	5
1.0299 - 1.0709	26.16 - 27.20	1	**RSKL-210-xxxxx**	**RSKL-110-xxxxx**	RSCL-015-00066	RSTL-03x-00066	RSRY-708-00265	5
1.0299 - 1.0709	26.16 - 27.20	2	**RSKL-220-xxxxx**	**RSKL-120-xxxxx**	RSCL-015-00066	RSTL-03x-00066	RSRY-708-00265	5
1.0299 - 1.0709	26.16 - 27.20	3	**RSKL-230-xxxxx**	**RSKL-130-xxxxx**	RSCL-015-00066	RSTL-03x-00066	RSRY-708-00265	5
1.0610 - 1.1024	26.95 - 28.00	1	**RSKL-210-xxxxx**	**RSKL-110-xxxxx**	RSCL-015-00068	RSTL-03x-00068	RSRY-708-00265	5
1.0610 - 1.1024	26.95 - 28.00	2	**RSKL-220-xxxxx**	**RSKL-120-xxxxx**	RSCL-015-00068	RSTL-03x-00068	RSRY-708-00265	5
1.0610 - 1.1024	26.95 - 28.00	3	**RSKL-230-xxxxx**	**RSKL-130-xxxxx**	RSCL-015-00068	RSTL-03x-00068	RSRY-708-00265	5
1.0917 - 1.1327	27.73 - 28.77	1	**RSKL-210-xxxxx**	**RSKL-110-xxxxx**	RSCL-015-00070	RSTL-03x-00070	RSRY-708-00265	5
1.0917 - 1.1327	27.73 - 28.77	2	**RSKL-220-xxxxx**	**RSKL-120-xxxxx**	RSCL-015-00070	RSTL-03x-00070	RSRY-708-00265	5
1.0917 - 1.1327	27.73 - 28.77	3	**RSKL-230-xxxxx**	**RSKL-130-xxxxx**	RSCL-015-00070	RSTL-03x-00070	RSRY-708-00265	5
1.1240 - 1.1650	28.55 - 29.59	1	**RSKL-210-xxxxx**	**RSKL-110-xxxxx**	RSCL-015-00072	RSTL-03x-00066	RSRY-708-00312	5
1.1240 - 1.1650	28.55 - 29.59	2	**RSKL-220-xxxxx**	**RSKL-120-xxxxx**	RSCL-015-00072	RSTL-03x-00066	RSRY-708-00312	5
1.1240 - 1.1650	28.55 - 29.59	3	**RSKL-230-xxxxx**	**RSKL-130-xxxxx**	RSCL-015-00072	RSTL-03x-00066	RSRY-708-00312	5
1.1551 - 1.1965	29.34 - 30.39	1	**RSKL-210-xxxxx**	**RSKL-110-xxxxx**	RSCL-015-00074	RSTL-03x-00068	RSRY-708-00312	5
1.1551 - 1.1965	29.34 - 30.39	2	**RSKL-220-xxxxx**	**RSKL-120-xxxxx**	RSCL-015-00074	RSTL-03x-00068	RSRY-708-00312	5
1.1551 - 1.1965	29.34 - 30.39	3	**RSKL-230-xxxxx**	**RSKL-130-xxxxx**	RSCL-015-00074	RSTL-03x-00068	RSRY-708-00312	5
1.1858 - 1.2268	30.12 - 31.16	1	**RSKL-210-xxxxx**	**RSKL-110-xxxxx**	RSCL-015-00076	RSTL-03x-00070	RSRY-708-00312	5
1.1858 - 1.2268	30.12 - 31.16	2	**RSKL-220-xxxxx**	**RSKL-120-xxxxx**	RSCL-015-00076	RSTL-03x-00070	RSRY-708-00312	5
1.1858 - 1.2268	30.12 - 31.16	3	**RSKL-230-xxxxx**	**RSKL-130-xxxxx**	RSCL-015-00076	RSTL-03x-00070	RSRY-708-00312	5

*xxxxx = Indicate to 2 metric decimal places the size to be burnished (e.g. short series roller burnisher Ø 27.50 mm with MT.1 shank: RSKL-210-02750).
**x = A number that will vary from 2 to 8 depending upon the exact diameter to be burnished. See page D: 6 for the correct identification of the "x" value.
NOTE: Each roller burnishing tool comes assembled complete with cage, cone, and rolls.

D: 42 - 45
Key on D: 1
D: 40 - 41
D: 39

Roller Burnishing Tools | Through Holes

F Series | Diameter Range: 0.9661" - 1.2268" (24.54 mm - 31.16 mm)

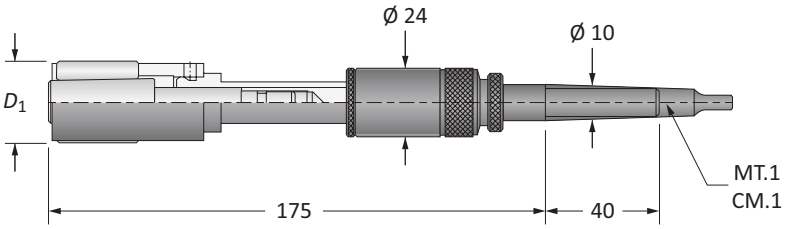

D_1		Part No.		Spare Parts			
Imperial (in)	Metric (mm)	Assembly with Morse Taper Shank	Assembly with Straight Shank	Cage	Cone	Rolls	Qty Rolls
0.9661 - 1.0075	24.54 - 25.59	**RDKF-200-02454**	**RDKF-100-02454**	RDCL-011-00062	RDTF-031-00062	RDRY-701-00265	5
0.9992 - 1.0402	25.38 - 26.42	**RDKF-200-02538**	**RDKF-100-02538**	RDCL-011-00064	RDTF-031-00064	RDRY-701-00265	7
1.0299 - 1.0709	26.16 - 27.20	**RDKF-200-02616**	**RDKF-100-02616**	RDCL-011-00066	RDTF-031-00066	RDRY-701-00265	7
1.0610 - 1.1024	26.95 - 28.00	**RDKF-200-02695**	**RDKF-100-02695**	RDCL-011-00068	RDTF-031-00068	RDRY-701-00265	7
1.0917 - 1.1327	27.73 - 28.77	**RDKF-200-02773**	**RDKF-100-02773**	RDCL-011-00070	RDTF-031-00070	RDRY-701-00265	7
1.1240 - 1.1650	28.55 - 29.59	**RDKF-200-02855**	**RDKF-100-02855**	RDCL-011-00072	RDTF-031-00066	RDRY-701-00312	7
1.1551 - 1.1965	29.34 - 30.39	**RDKF-200-02934**	**RDKF-100-02934**	RDCL-011-00074	RDTF-031-00068	RDRY-701-00312	7
1.1858 - 1.2268	30.12 - 31.16	**RDKF-200-03012**	**RDKF-100-03012**	RDCL-011-00076	RDTF-031-00070	RDRY-701-00312	7

NOTE: Each roller burnishing tool comes assembled complete with cage, cone, and rolls.

D: 42 - 45

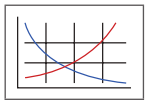

D: 40 - 41

D: 38

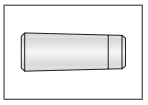

Roller Burnishing Tools | Blind Holes

F Series | Diameter Range: 0.9661" - 1.2268" (24.54 mm - 31.16 mm)

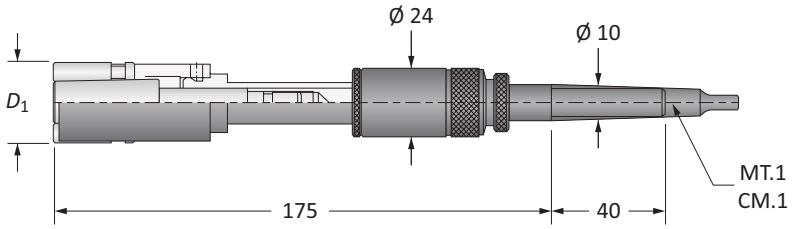

D_1		Part No.*		Spare Parts			
Imperial (in)	Metric (mm)	Assembly with Morse Taper Shank	Assembly with Straight Shank	Cage	Cone**	Rolls	Qty Rolls
0.9661 - 1.0075	24.54 - 25.59	**RSKF-200-xxxxx**	**RSKF-100-xxxxx**	RSCL-015-00062	RSTF-03x-00062	RSRY-708-00265	5
0.9992 - 1.0402	25.38 - 26.42	**RSKF-200-xxxxx**	**RSKF-100-xxxxx**	RSCL-015-00064	RSTF-03x-00064	RSRY-708-00265	5
1.0299 - 1.0709	26.16 - 27.20	**RSKF-200-xxxxx**	**RSKF-100-xxxxx**	RSCL-015-00066	RSTF-03x-00066	RSRY-708-00265	5
1.0610 - 1.1024	26.95 - 28.00	**RSKF-200-xxxxx**	**RSKF-100-xxxxx**	RSCL-015-00068	RSTF-03x-00068	RSRY-708-00265	5
1.0917 - 1.1327	27.73 - 28.77	**RSKF-200-xxxxx**	**RSKF-100-xxxxx**	RSCL-015-00070	RSTF-03x-00070	RSRY-708-00265	5
1.1240 - 1.1650	28.55 - 29.59	**RSKF-200-xxxxx**	**RSKF-100-xxxxx**	RSCL-015-00072	RSTF-03x-00066	RSRY-708-00312	5
1.1551 - 1.1965	29.34 - 30.39	**RSKF-200-xxxxx**	**RSKF-100-xxxxx**	RSCL-015-00074	RSTF-03x-00068	RSRY-708-00312	5
1.1858 - 1.2268	30.12 - 31.16	**RSKF-200-xxxxx**	**RSKF-100-xxxxx**	RSCL-015-00076	RSTF-03x-00070	RSRY-708-00312	5

*xxxxx = Indicate to 2 metric decimal places the size to be burnished (e.g. roller burnisher Ø 27.00 mm with MT.1 shank: RSKF-200-02700).
**x = A number that will vary from 2 to 8 depending upon the exact diameter to be burnished. See page D: 6 for the correct identification of the "x" value.
NOTE: Each roller burnishing tool comes assembled complete with cage, cone, and rolls.

D: 42 - 45
D: 40 - 41
D: 39
Key on D: 1

A DRILLING
B BORING
C REAMING
D BURNISHING
E THREADING
X SPECIALS

Roller Burnishing Tools | Through Holes

M Series | Diameter Range: 1.2146" - 1.4118" (30.85 mm - 35.86 mm)

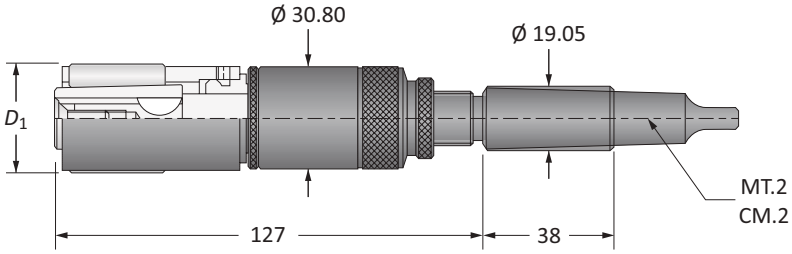

D_1		Part No.		Spare Parts			
Imperial (in)	Metric (mm)	Assembly with Morse Taper Shank	Assembly with Straight Shank	Cage	Cone	Rolls	Qty Rolls
1.2146 - 1.2559	30.85 - 31.90	**RDKM-200-03085**	**RDKM-100-03085**	RDCM-011-00078	RDTM-031-00078	RDRY-701-00265	7
1.2469 - 1.2878	31.67 - 32.71	**RDKM-200-03167**	**RDKM-100-03167**	RDCM-011-00080	RDTM-031-00080	RDRY-701-00265	7
1.2772 - 1.3177	32.44 - 33.47	**RDKM-200-03244**	**RDKM-100-03244**	RDCM-011-00082	RDTM-031-00082	RDRY-701-00265	7
1.3087 - 1.3500	33.24 - 34.29	**RDKM-200-03324**	**RDKM-100-03324**	RDCM-011-00084	RDTM-031-00078	RDRY-701-00312	7
1.3406 - 1.3815	34.05 - 35.09	**RDKM-200-03405**	**RDKM-100-03405**	RDCM-011-00086	RDTM-031-00080	RDRY-701-00312	7
1.3713 - 1.4118	34.83 - 35.86	**RDKM-200-03483**	**RDKM-100-03483**	RDCM-011-00088	RDTM-031-00082	RDRY-701-00312	7

NOTE: Each roller burnishing tool comes assembled complete with cage, cone, and rolls.

D: 42 - 45

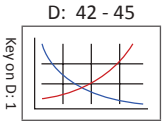

D: 40 - 41

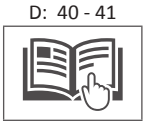

D: 38

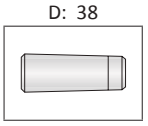

Roller Burnishing Tools | Blind Holes

M Series | Diameter Range: 1.2146" - 1.4118" (30.85 mm - 35.86 mm)

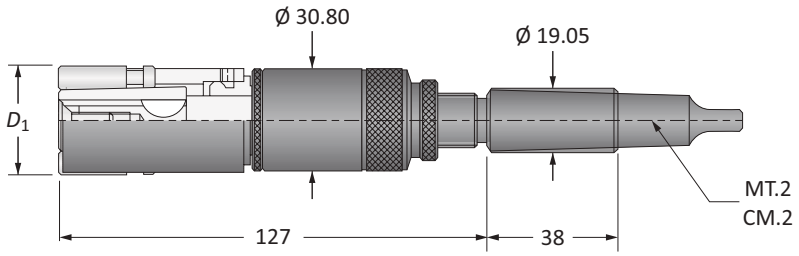

D_1		Part No.*		Spare Parts			
Imperial (in)	Metric (mm)	Assembly with Morse Taper Shank	Assembly with Straight Shank	Cage	Cone**	Rolls	Qty Rolls
1.2146 - 1.2559	30.85 - 31.90	**RSKM-200-xxxxx**	**RSKM-100-xxxxx**	RSCM-015-00078	RSTM-03x-00078	RSRY-708-00265	5
1.2469 - 1.2878	31.67 - 32.71	**RSKM-200-xxxxx**	**RSKM-100-xxxxx**	RSCM-015-00080	RSTM-03x-00080	RSRY-708-00265	5
1.2772 - 1.3177	32.44 - 33.47	**RSKM-200-xxxxx**	**RSKM-100-xxxxx**	RSCM-015-00082	RSTM-03x-00082	RSRY-708-00265	5
1.3087 - 1.3500	33.24 - 34.29	**RSKM-200-xxxxx**	**RSKM-100-xxxxx**	RSCM-015-00084	RSTM-03x-00078	RSRY-708-00312	5
1.3406 - 1.3815	34.05 - 35.09	**RSKM-200-xxxxx**	**RSKM-100-xxxxx**	RSCM-015-00086	RSTM-03x-00080	RSRY-708-00312	5
1.3713 - 1.4118	34.83 - 35.86	**RSKM-200-xxxxx**	**RSKM-100-xxxxx**	RSCM-015-00088	RSTM-03x-00082	RSRY-708-00312	5

*xxxxx = Indicate to 2 metric decimal places the size to be burnished (e.g. roller burnisher Ø 35.00 mm with MT.2 shank: RSKM-200-03500).
**x = A number that will vary from 2 to 8 depending upon the exact diameter to be burnished. See page D: 6 for the correct identification of the "x" value.
NOTE: Each roller burnishing tool comes assembled complete with cage, cone, and rolls.

D: 42 - 45
Key on D: 1
D: 40 - 41
D: 39

Roller Burnishing Tools | Through Holes

N Series | Diameter Range: 1.4020" - 1.8492" (35.61 mm - 46.97 mm)

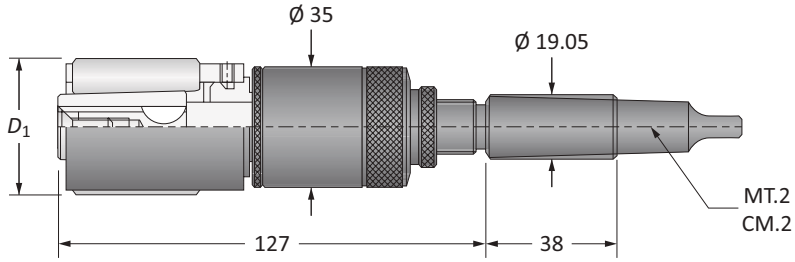

D_1		Part No.		Spare Parts			
Imperial (in)	Metric (mm)	Assembly with Morse Taper Shank	Assembly with Straight Shank	Cage	Cone	Rolls	Qty Rolls
1.4020 - 1.4433	35.61 - 36.66	**RDKN-200-03561**	**RDKN-100-03561**	RDCN-011-00090	RDTN-031-00090	RDRY-701-00312	7
1.4331 - 1.4740	36.40 - 37.44	**RDKN-200-03640**	**RDKN-100-03640**	RDCN-011-00092	RDTN-031-00092	RDRY-701-00312	7
1.4638 - 1.5051	37.18 - 38.23	**RDKN-200-03718**	**RDKN-100-03718**	RDCN-011-00094	RDTN-031-00094	RDRY-701-00312	7
1.4961 - 1.5370	38.00 - 39.04	**RDKN-200-03800**	**RDKN-100-03800**	RDCN-011-00096	RDTN-031-00096	RDRY-701-00312	7
1.5272 - 1.5677	38.79 - 39.82	**RDKN-200-03879**	**RDKN-100-03879**	RDCN-011-00098	RDTM-031-00080	RDRY-701-00406	7
1.5579 - 1.5992	39.57 - 40.62	**RDKN-200-03957**	**RDKN-100-03957**	RDCN-011-00100	RDTM-031-00082	RDRY-701-00406	7
1.5890 - 1.6299	40.36 - 41.40	**RDKN-200-04036**	**RDKN-100-04036**	RDCN-011-00102	RDTN-031-00090	RDRY-701-00406	7
1.6213 - 1.6618	41.18 - 42.21	**RDKN-200-04118**	**RDKN-100-04118**	RDCN-011-00104	RDTN-031-00092	RDRY-701-00406	7
1.6520 - 1.6933	41.96 - 43.01	**RDKN-200-04196**	**RDKN-100-04196**	RDCN-011-00106	RDTN-031-00094	RDRY-701-00406	7
1.6831 - 1.7240	42.75 - 43.79	**RDKN-200-04275**	**RDKN-100-04275**	RDCN-011-00108	RDTM-031-00082	RDRY-701-00468	7
1.7138 - 1.7551	43.53 - 44.58	**RDKN-200-04353**	**RDKN-100-04353**	RDCN-011-00110	RDTN-031-00090	RDRY-701-00468	7
1.7461 - 1.7870	44.35 - 45.39	**RDKN-200-04435**	**RDKN-100-04435**	RDCN-011-00112	RDTN-031-00092	RDRY-701-00468	7
1.7772 - 1.8177	45.14 - 46.17	**RDKN-200-04514**	**RDKN-100-04514**	RDCN-011-00114	RDTN-031-00094	RDRY-701-00468	7
1.8079 - 1.8492	45.92 - 46.97	**RDKN-200-04592**	**RDKN-100-04592**	RDCN-011-00116	RDTN-031-00096	RDRY-701-00468	7

NOTE: Each roller burnishing tool comes assembled complete with cage, cone, and rolls.

D: 42 - 45 | D: 40 - 41 | D: 38

Key on D: 1

Roller Burnishing Tools | Blind Holes

N Series | Diameter Range: 1.4020" - 1.8492" (35.61 mm - 46.97 mm)

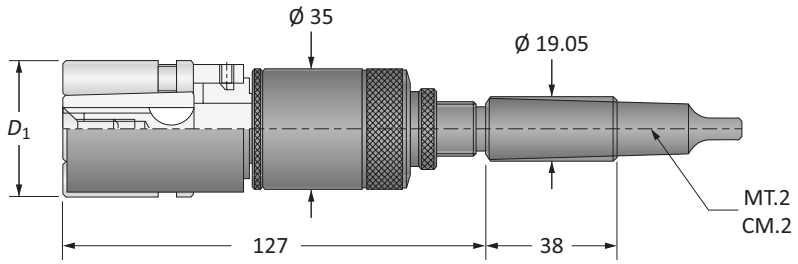

D_1		Part No.*		Spare Parts			
Imperial (in)	Metric (mm)	Assembly with Morse Taper Shank	Assembly with Straight Shank	Cage	Cone**	Rolls	Qty Rolls
1.4020 - 1.4433	35.61 - 36.66	**RSKN-200-xxxxx**	**RSKN-100-xxxxx**	RSCN-015-00090	RSTN-03x-00090	RSRY-708-00312	5
1.4331 - 1.4740	36.40 - 37.44	**RSKN-200-xxxxx**	**RSKN-100-xxxxx**	RSCN-015-00092	RSTN-03x-00092	RSRY-708-00312	5
1.4638 - 1.5051	37.18 - 38.23	**RSKN-200-xxxxx**	**RSKN-100-xxxxx**	RSCN-015-00094	RSTN-03x-00094	RSRY-708-00312	5
1.4961 - 1.5370	38.00 - 39.04	**RSKN-200-xxxxx**	**RSKN-100-xxxxx**	RSCN-015-00096	RSTN-03x-00096	RSRY-708-00312	5
1.5272 - 1.5677	38.79 - 39.82	**RSKN-200-xxxxx**	**RSKN-100-xxxxx**	RSCN-015-00098	RSTM-03x-00080	RSRY-708-00406	5
1.5579 - 1.5992	39.57 - 40.62	**RSKN-200-xxxxx**	**RSKN-100-xxxxx**	RSCN-015-00100	RSTM-03x-00082	RSRY-708-00406	5
1.5890 - 1.6299	40.36 - 41.40	**RSKN-200-xxxxx**	**RSKN-100-xxxxx**	RSCN-015-00102	RSTN-03x-00090	RSRY-708-00406	5
1.6213 - 1.6618	41.18 - 42.21	**RSKN-200-xxxxx**	**RSKN-100-xxxxx**	RSCN-015-00104	RSTN-03x-00092	RSRY-708-00406	5
1.6520 - 1.6933	41.96 - 43.01	**RSKN-200-xxxxx**	**RSKN-100-xxxxx**	RSCN-015-00106	RSTN-03x-00094	RSRY-708-00406	5
1.6831 - 1.7240	42.75 - 43.79	**RSKN-200-xxxxx**	**RSKN-100-xxxxx**	RSCN-015-00108	RSTM-03x-00082	RSRY-708-00468	5
1.7138 - 1.7551	43.53 - 44.58	**RSKN-200-xxxxx**	**RSKN-100-xxxxx**	RSCN-015-00110	RSTN-03x-00090	RSRY-708-00468	5
1.7461 - 1.7870	44.35 - 45.39	**RSKN-200-xxxxx**	**RSKN-100-xxxxx**	RSCN-015-00112	RSTN-03x-00092	RSRY-708-00468	5
1.7772 - 1.8177	45.14 - 46.17	**RSKN-200-xxxxx**	**RSKN-100-xxxxx**	RSCN-015-00114	RSTN-03x-00094	RSRY-708-00468	5
1.8079 - 1.8492	45.92 - 46.97	**RSKN-200-xxxxx**	**RSKN-100-xxxxx**	RSCN-015-00116	RSTN-03x-00096	RSRY-708-00468	5

*xxxxx = Indicate to 2 metric decimal places the size to be burnished (e.g. roller burnisher Ø 40.00 mm with straight shank: RSKN-100-04000).
**x = A number that will vary from 2 to 8 depending upon the exact diameter to be burnished. See page D: 6 for the correct identification of the "x" value.
NOTE: Each roller burnishing tool comes assembled complete with cage, cone, and rolls.

D: 42 - 45
D: 40 - 41
D: 39
Key on D: 1

Roller Burnishing Tools | Through Holes

O Series | Diameter Range: 1.8390" - 2.2240" (46.71 mm - 56.49 mm)

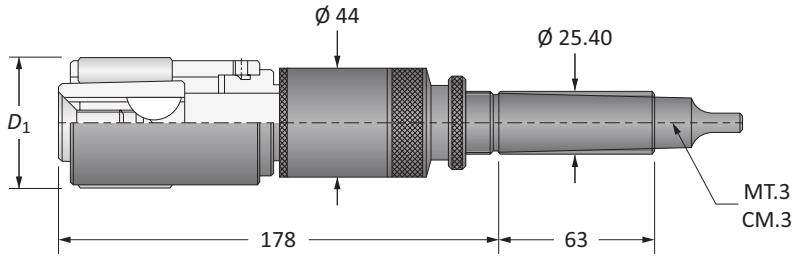

Through Holes

D_1		Part No.		Spare Parts			
Imperial (in)	Metric (mm)	Assembly with Morse Taper Shank	Assembly with Straight Shank	Cage	Cone	Rolls	Qty Rolls
1.8390 - 1.8799	46.71 - 47.75	**RDKO-200-04671**	**RDKO-100-04671**	RDCO-011-00118	RDTO-031-00118	RDRY-701-00312	9
1.8713 - 1.9118	47.53 - 48.56	**RDKO-200-04753**	**RDKO-100-04753**	RDCO-011-00120	RDTO-031-00120	RDRY-701-00312	9
1.9020 - 1.9433	48.31 - 49.36	**RDKO-200-04831**	**RDKO-100-04831**	RDCO-011-00122	RDTO-031-00122	RDRY-701-00312	9
1.9331 - 1.9740	49.10 - 50.14	**RDKO-200-04910**	**RDKO-100-04910**	RDCO-011-00124	RDTO-031-00124	RDRY-701-00312	9
1.9638 - 2.0051	49.88 - 50.93	**RDKO-200-04988**	**RDKO-100-04988**	RDCO-011-00126	RDTO-031-00126	RDRY-701-00312	9
1.9961 - 2.0370	50.70 - 51.74	**RDKO-200-05070**	**RDKO-100-05070**	RDCO-011-00128	RDTO-031-00128	RDRY-701-00312	9
2.0272 - 2.0681	51.49 - 52.53	**RDKO-200-05149**	**RDKO-100-05149**	RDCO-011-00130	RDTO-031-00118	RDRY-701-00406	9
2.0579 - 2.0992	52.27 - 53.32	**RDKO-200-05227**	**RDKO-100-05227**	RDCO-011-00132	RDTO-031-00120	RDRY-701-00406	9
2.0890 - 2.1299	53.06 - 54.10	**RDKO-200-05306**	**RDKO-100-05306**	RDCO-011-00134	RDTO-031-00122	RDRY-701-00406	9
2.1209 - 2.1618	53.87 - 54.91	**RDKO-200-05387**	**RDKO-100-05387**	RDCO-011-00136	RDTO-031-00124	RDRY-701-00406	9
2.1520 - 2.1933	54.66 - 55.71	**RDKO-200-05466**	**RDKO-100-05466**	RDCO-011-00138	RDTO-031-00126	RDRY-701-00406	9
2.1831 - 2.2240	55.45 - 56.49	**RDKO-200-05545**	**RDKO-100-05545**	RDCO-011-00140	RDTO-031-00128	RDRY-701-00406	9

NOTE: Each roller burnishing tool comes assembled complete with cage, cone, and rolls.

D: 42 - 45 D: 40 - 41 D: 38

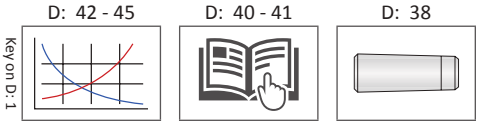

Roller Burnishing Tools | Blind Holes

O Series | Diameter Range: 1.8390" - 2.2240" (46.71 mm - 56.49 mm)

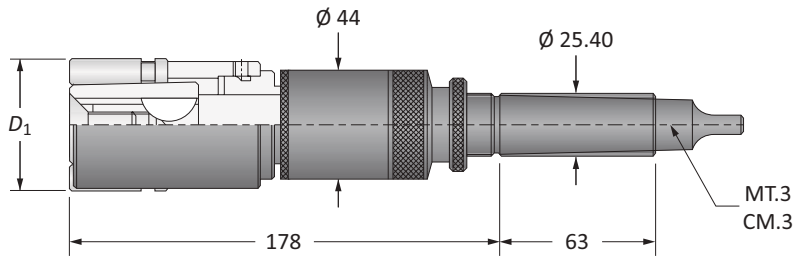

Blind Holes

D_1		Part No.*		Spare Parts			
Imperial (in)	Metric (mm)	Assembly with Morse Taper Shank	Assembly with Straight Shank	Cage	Cone**	Rolls	Qty Rolls
1.8390 - 1.8799	46.71 - 47.75	**RSKO-200-xxxxx**	**RSKO-100-xxxxx**	RSCO-015-00118	RSTO-03x-00118	RSRY-708-00312	7
1.8713 - 1.9118	47.53 - 48.56	**RSKO-200-xxxxx**	**RSKO-100-xxxxx**	RSCO-015-00120	RSTO-03x-00120	RSRY-708-00312	7
1.9020 - 1.9433	48.31 - 49.36	**RSKO-200-xxxxx**	**RSKO-100-xxxxx**	RSCO-015-00122	RSTO-03x-00122	RSRY-708-00312	7
1.9331 - 1.9740	49.10 - 50.14	**RSKO-200-xxxxx**	**RSKO-100-xxxxx**	RSCO-015-00124	RSTO-03x-00124	RSRY-708-00312	7
1.9638 - 2.0051	49.88 - 50.93	**RSKO-200-xxxxx**	**RSKO-100-xxxxx**	RSCO-015-00126	RSTO-03x-00126	RSRY-708-00312	7
1.9961 - 2.0370	50.70 - 51.74	**RSKO-200-xxxxx**	**RSKO-100-xxxxx**	RSCO-015-00128	RSTO-03x-00128	RSRY-708-00312	7
2.0272 - 2.0681	51.49 - 52.53	**RSKO-200-xxxxx**	**RSKO-100-xxxxx**	RSCO-015-00130	RSTO-03x-00118	RSRY-708-00406	7
2.0579 - 2.0992	52.27 - 53.32	**RSKO-200-xxxxx**	**RSKO-100-xxxxx**	RSCO-015-00132	RSTO-03x-00120	RSRY-708-00406	7
2.0890 - 2.1299	53.06 - 54.10	**RSKO-200-xxxxx**	**RSKO-100-xxxxx**	RSCO-015-00134	RSTO-03x-00122	RSRY-708-00406	7
2.1209 - 2.1618	53.87 - 54.91	**RSKO-200-xxxxx**	**RSKO-100-xxxxx**	RSCO-015-00136	RSTO-03x-00124	RSRY-708-00406	7
2.1520 - 2.1933	54.66 - 55.71	**RSKO-200-xxxxx**	**RSKO-100-xxxxx**	RSCO-015-00138	RSTO-03x-00126	RSRY-708-00406	7
2.1831 - 2.2240	55.45 - 56.49	**RSKO-200-xxxxx**	**RSKO-100-xxxxx**	RSCO-015-00140	RSTO-03x-00128	RSRY-708-00406	7

*xxxxx = Indicate to 2 metric decimal places the size to be burnished (e.g. roller burnisher Ø 50.25 mm with MT.3 shank: RSKO-200-05025).
**x = A number that will vary from 2 to 8 depending upon the exact diameter to be burnished. See page D: 6 for the correct identification of the "x" value.
NOTE: Each roller burnishing tool comes assembled complete with cage, cone, and rolls.

D: 42 - 45 D: 40 - 41 D: 39
Key on D: 1

Roller Burnishing Tools | Through Holes

P Series | Diameter Range: 2.2138" - 2.7240" (56.23 mm - 69.19 mm)

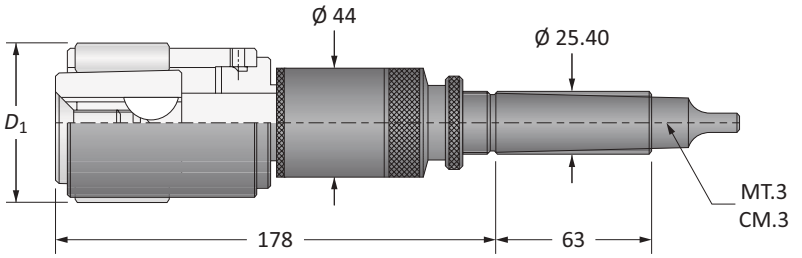

Through Holes

D_1		Part No.		Spare Parts			
Imperial (in)	Metric (mm)	Assembly with Morse Taper Shank	Assembly with Straight Shank	Cage	Cone	Rolls	Qty Rolls
2.2138 - 2.2551	56.23 - 57.28	**RDKP-200-05623**	**RDKP-100-05623**	RDCP-011-00142	RDTP-031-00142	RDRY-701-00406	9
2.2461 - 2.2870	57.05 - 58.09	**RDKP-200-05705**	**RDKP-100-05705**	RDCP-011-00144	RDTP-031-00144	RDRY-701-00406	9
2.2772 - 2.3177	57.84 - 58.87	**RDKP-200-05784**	**RDKP-100-05784**	RDCP-011-00146	RDTP-031-00146	RDRY-701-00406	9
2.3079 - 2.3492	58.62 - 59.67	**RDKP-200-05862**	**RDKP-100-05862**	RDCP-011-00148	RDTP-031-00148	RDRY-701-00406	9
2.3390 - 2.3799	59.41 - 60.45	**RDKP-200-05941**	**RDKP-100-05941**	RDCP-011-00150	RDTP-031-00142	RDRY-701-00468	9
2.3713 - 2.4118	60.23 - 61.26	**RDKP-200-06023**	**RDKP-100-06023**	RDCP-011-00152	RDTP-031-00144	RDRY-701-00468	9
2.4020 - 2.4433	61.01 - 62.06	**RDKP-200-06101**	**RDKP-100-06101**	RDCP-011-00154	RDTP-031-00146	RDRY-701-00468	9
2.4330 - 2.4740	61.80 - 62.84	**RDKP-200-06180**	**RDKP-100-06180**	RDCP-011-00156	RDTP-031-00148	RDRY-701-00468	9
2.4638 - 2.5051	62.58 - 63.63	**RDKP-200-06258**	**RDKP-100-06258**	RDCP-011-00158	RDTP-031-00158	RDRY-701-00468	9
2.4961 - 2.5370	63.40 - 64.44	**RDKP-200-06340**	**RDKP-100-06340**	RDCP-011-00160	RDTP-031-00160	RDRY-701-00468	9
2.5272 - 2.5677	64.19 - 65.22	**RDKP-200-06419**	**RDKP-100-06419**	RDCP-011-00162	RDTP-031-00162	RDRY-701-00468	9
2.5579 - 2.5992	64.97 - 66.02	**RDKP-200-06497**	**RDKP-100-06497**	RDCP-011-00164	RDTP-031-00164	RDRY-701-00468	9
2.5890 - 2.6299	65.76 - 66.80	**RDKP-200-06576**	**RDKP-100-06576**	RDCP-011-00166	RDTP-031-00158	RDRY-701-00531	9
2.6213 - 2.6618	66.58 - 67.61	**RDKP-200-06658**	**RDKP-100-06658**	RDCP-011-00168	RDTP-031-00160	RDRY-701-00531	9
2.6520 - 2.6933	67.36 - 68.41	**RDKP-200-06736**	**RDKP-100-06736**	RDCP-011-00170	RDTP-031-00162	RDRY-701-00531	9
2.6830 - 2.7240	68.15 - 69.19	**RDKP-200-06815**	**RDKP-100-06815**	RDCP-011-00172	RDTP-031-00164	RDRY-701-00531	9

NOTE: Each roller burnishing tool comes assembled complete with cage, cone, and rolls.

D: 42 - 45 | D: 40 - 41 | D: 38

Key on D: 1

Roller Burnishing Tools | Blind Holes

P Series | Diameter Range: 2.2138" - 2.7240" (56.23 mm - 69.19 mm)

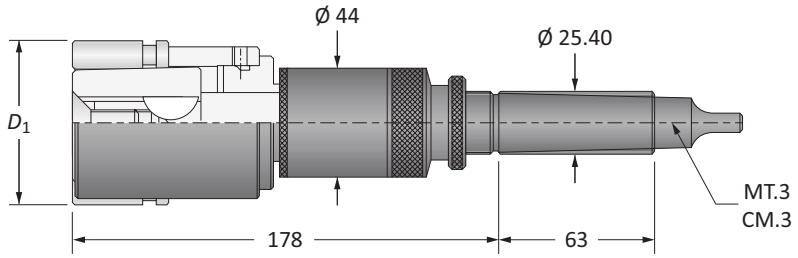

Blind Holes

D_1		Part No.*		Spare Parts			
Imperial (in)	Metric (mm)	Assembly with Morse Taper Shank	Assembly with Straight Shank	Cage	Cone**	Rolls	Qty Rolls
2.2138 - 2.2551	56.23 - 57.28	**RSKP-200-xxxxx**	**RSKP-100-xxxxx**	RSCP-015-00142	RSTP-03x-00142	RSRY-708-00406	7
2.2461 - 2.2870	57.05 - 58.09	**RSKP-200-xxxxx**	**RSKP-100-xxxxx**	RSCP-015-00144	RSTP-03x-00144	RSRY-708-00406	7
2.2772 - 2.3177	57.84 - 58.87	**RSKP-200-xxxxx**	**RSKP-100-xxxxx**	RSCP-015-00146	RSTP-03x-00146	RSRY-708-00406	7
2.3079 - 2.3492	58.62 - 59.67	**RSKP-200-xxxxx**	**RSKP-100-xxxxx**	RSCP-015-00148	RSTP-03x-00148	RSRY-708-00406	7
2.3390 - 2.3799	59.41 - 60.45	**RSKP-200-xxxxx**	**RSKP-100-xxxxx**	RSCP-015-00150	RSTP-03x-00142	RSRY-708-00468	7
2.3713 - 2.4118	60.23 - 61.26	**RSKP-200-xxxxx**	**RSKP-100-xxxxx**	RSCP-015-00152	RSTP-03x-00144	RSRY-708-00468	7
2.4020 - 2.4433	61.01 - 62.06	**RSKP-200-xxxxx**	**RSKP-100-xxxxx**	RSCP-015-00154	RSTP-03x-00146	RSRY-708-00468	7
2.4330 - 2.4740	61.80 - 62.84	**RSKP-200-xxxxx**	**RSKP-100-xxxxx**	RSCP-015-00156	RSTP-03x-00148	RSRY-708-00468	7
2.4638 - 2.5051	62.58 - 63.63	**RSKP-200-xxxxx**	**RSKP-100-xxxxx**	RSCP-015-00158	RSTP-03x-00158	RSRY-708-00468	7
2.4961 - 2.5370	63.40 - 64.44	**RSKP-200-xxxxx**	**RSKP-100-xxxxx**	RSCP-015-00160	RSTP-03x-00160	RSRY-708-00468	7
2.5272 - 2.5677	64.19 - 65.22	**RSKP-200-xxxxx**	**RSKP-100-xxxxx**	RSCP-015-00162	RSTP-03x-00162	RSRY-708-00468	7
2.5579 - 2.5992	64.97 - 66.02	**RSKP-200-xxxxx**	**RSKP-100-xxxxx**	RSCP-015-00164	RSTP-03x-00164	RSRY-708-00468	7
2.5890 - 2.6299	65.76 - 66.80	**RSKP-200-xxxxx**	**RSKP-100-xxxxx**	RSCP-015-00166	RSTP-03x-00158	RSRY-708-00531	7
2.6213 - 2.6618	66.58 - 67.61	**RSKP-200-xxxxx**	**RSKP-100-xxxxx**	RSCP-015-00168	RSTP-03x-00160	RSRY-708-00531	7
2.6520 - 2.6933	67.36 - 68.41	**RSKP-200-xxxxx**	**RSKP-100-xxxxx**	RSCP-015-00170	RSTP-03x-00162	RSRY-708-00531	7
2.6830 - 2.7240	68.15 - 69.19	**RSKP-200-xxxxx**	**RSKP-100-xxxxx**	RSCP-015-00172	RSTP-03x-00164	RSRY-708-00531	7

*xxxxx = Indicate to 2 metric decimal places the size to be burnished (e.g. roller burnisher Ø 60.05 mm with straight shank: RSKP-100-06005).
**x = A number that will vary from 2 to 8 depending upon the exact diameter to be burnished. See page D: 6 for the correct identification of the "x" value.
NOTE: Each roller burnishing tool comes assembled complete with cage, cone, and rolls.

D: 42 - 45 | D: 40 - 41 | D: 39

Key on D: 1

Roller Burnishing Tools | Through Holes

Q Series | Diameter Range: 2.7138" - 3.3492" (68.93 mm - 85.07 mm)

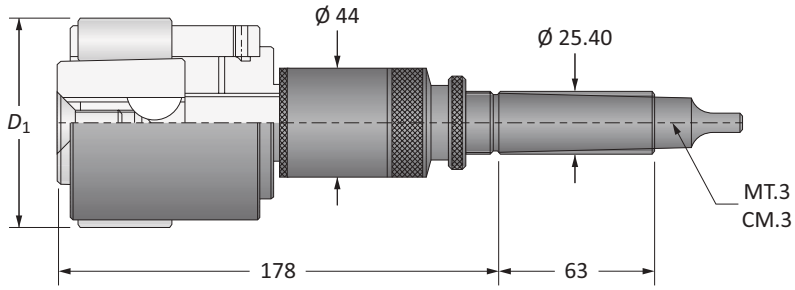

Through Holes

D_1		Part No.		Spare Parts			
Imperial (in)	Metric (mm)	Assembly with Morse Taper Shank	Assembly with Straight Shank	Cage	Cone	Rolls	Qty Rolls
2.7138 - 2.7551	68.93 - 69.98	**RDKQ-200-06893**	**RDKQ-100-06893**	RDCQ-011-00174	RDTQ-031-00174	RDRY-701-00531	9
2.7461 - 2.7870	69.75 - 70.79	**RDKQ-200-06975**	**RDKQ-100-06975**	RDCQ-011-00176	RDTQ-031-00176	RDRY-701-00531	9
2.7772 - 2.8177	70.54 - 71.57	**RDKQ-200-07054**	**RDKQ-100-07054**	RDCQ-011-00178	RDTQ-031-00178	RDRY-701-00531	9
2.8079 - 2.8504	71.32 - 72.40	**RDKQ-200-07132**	**RDKQ-100-07132**	RDCQ-011-00180	RDTQ-031-00180	RDRY-701-00531	9
2.8390 - 2.8799	72.11 - 73.15	**RDKQ-200-07211**	**RDKQ-100-07211**	RDCQ-011-00182	RDTQ-031-00182	RDRY-701-00531	9
2.8713 - 2.9118	72.93 - 73.96	**RDKQ-200-07293**	**RDKQ-100-07293**	RDCQ-011-00184	RDTQ-031-00184	RDRY-701-00531	9
2.9020 - 2.9429	73.71 - 74.75	**RDKQ-200-07371**	**RDKQ-100-07371**	RDCQ-011-00186	RDTQ-031-00174	RDRY-701-00625	9
2.9331 - 2.9740	74.50 - 75.54	**RDKQ-200-07450**	**RDKQ-100-07450**	RDCQ-011-00188	RDTQ-031-00176	RDRY-701-00625	9
2.9638 - 3.0051	75.28 - 76.33	**RDKQ-200-07528**	**RDKQ-100-07528**	RDCQ-011-00190	RDTQ-031-00178	RDRY-701-00625	9
2.9961 - 3.0370	76.10 - 77.14	**RDKQ-200-07610**	**RDKQ-100-07610**	RDCQ-011-00192	RDTQ-031-00180	RDRY-701-00625	9
3.0272 - 3.0681	76.89 - 77.93	**RDKQ-200-07689**	**RDKQ-100-07689**	RDCQ-011-00194	RDTQ-031-00182	RDRY-701-00625	9
3.0579 - 3.0992	77.67 - 78.72	**RDKQ-200-07767**	**RDKQ-100-07767**	RDCQ-011-00196	RDTQ-031-00184	RDRY-701-00625	9
3.0890 - 3.1299	78.46 - 79.50	**RDKQ-200-07846**	**RDKQ-100-07846**	RDCQ-011-00198	RDTQ-031-00198	RDRY-701-00625	9
3.1209 - 3.1618	79.27 - 80.31	**RDKQ-200-07927**	**RDKQ-100-07927**	RDCQ-011-00200	RDTQ-031-00200	RDRY-701-00625	9
3.1520 - 3.1933	80.06 - 81.11	**RDKQ-200-08006**	**RDKQ-100-08006**	RDCQ-011-00202	RDTQ-031-00202	RDRY-701-00625	9
3.1831 - 3.2240	80.85 - 81.89	**RDKQ-200-08085**	**RDKQ-100-08085**	RDCQ-011-00204	RDTQ-031-00204	RDRY-701-00625	9
3.2138 - 3.2551	81.63 - 82.68	**RDKQ-200-08163**	**RDKQ-100-08163**	RDCQ-011-00206	RDTQ-031-00198	RDRY-701-00687	9
3.2461 - 3.2870	82.45 - 83.49	**RDKQ-200-08245**	**RDKQ-100-08245**	RDCQ-011-00208	RDTQ-031-00200	RDRY-701-00687	9
3.2772 - 3.3177	83.24 - 84.27	**RDKQ-200-08324**	**RDKQ-100-08324**	RDCQ-011-00210	RDTQ-031-00202	RDRY-701-00687	9
3.3079 - 3.3492	84.02 - 85.07	**RDKQ-200-08402**	**RDKQ-100-08402**	RDCQ-011-00212	RDTQ-031-00204	RDRY-701-00687	9

NOTE: Each roller burnishing tool comes assembled complete with cage, cone, and rolls.

D: 42 - 45 | D: 40 - 41 | D: 38

Key on D: 1

Roller Burnishing Tools | Blind Holes

Q Series | Diameter Range: 2.7138" - 3.3492" (68.93 mm - 85.07 mm)

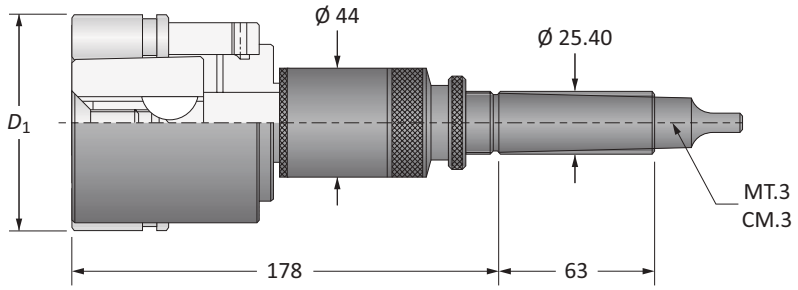

Blind Holes

D_1		Part No.*		Spare Parts			
Imperial (in)	Metric (mm)	Assembly with Morse Taper Shank	Assembly with Straight Shank	Cage	Cone**	Rolls	Qty Rolls
2.7138 - 2.7551	68.93 - 69.98	**RSKQ-200-xxxxx**	**RSKQ-100-xxxxx**	RSCQ-015-00174	RSTQ-03x-00174	RSRY-708-00531	7
2.7461 - 2.7870	69.75 - 70.79	**RSKQ-200-xxxxx**	**RSKQ-100-xxxxx**	RSCQ-015-00176	RSTQ-03x-00176	RSRY-708-00531	7
2.7772 - 2.8177	70.54 - 71.57	**RSKQ-200-xxxxx**	**RSKQ-100-xxxxx**	RSCQ-015-00178	RSTQ-03x-00178	RSRY-708-00531	7
2.8079 - 2.8504	71.32 - 72.40	**RSKQ-200-xxxxx**	**RSKQ-100-xxxxx**	RSCQ-015-00180	RSTQ-03x-00180	RSRY-708-00531	7
2.8390 - 2.8799	72.11 - 73.15	**RSKQ-200-xxxxx**	**RSKQ-100-xxxxx**	RSCQ-015-00182	RSTQ-03x-00182	RSRY-708-00531	7
2.8713 - 2.9118	72.93 - 73.96	**RSKQ-200-xxxxx**	**RSKQ-100-xxxxx**	RSCQ-015-00184	RSTQ-03x-00184	RSRY-708-00531	7
2.9020 - 2.9429	73.71 - 74.75	**RSKQ-200-xxxxx**	**RSKQ-100-xxxxx**	RSCQ-015-00186	RSTQ-03x-00174	RSRY-708-00625	7
2.9331 - 2.9740	74.50 - 75.54	**RSKQ-200-xxxxx**	**RSKQ-100-xxxxx**	RSCQ-015-00188	RSTQ-03x-00176	RSRY-708-00625	7
2.9638 - 3.0051	75.28 - 76.33	**RSKQ-200-xxxxx**	**RSKQ-100-xxxxx**	RSCQ-015-00190	RSTQ-03x-00178	RSRY-708-00625	7
2.9961 - 3.0370	76.10 - 77.14	**RSKQ-200-xxxxx**	**RSKQ-100-xxxxx**	RSCQ-015-00192	RSTQ-03x-00180	RSRY-708-00625	7
3.0272 - 3.0681	76.89 - 77.93	**RSKQ-200-xxxxx**	**RSKQ-100-xxxxx**	RSCQ-015-00194	RSTQ-03x-00182	RSRY-708-00625	7
3.0579 - 3.0992	77.67 - 78.72	**RSKQ-200-xxxxx**	**RSKQ-100-xxxxx**	RSCQ-015-00196	RSTQ-03x-00184	RSRY-708-00625	7
3.0890 - 3.1299	78.46 - 79.50	**RSKQ-200-xxxxx**	**RSKQ-100-xxxxx**	RSCQ-015-00198	RSTQ-03x-00198	RSRY-708-00625	7
3.1209 - 3.1618	79.27 - 80.31	**RSKQ-200-xxxxx**	**RSKQ-100-xxxxx**	RSCQ-015-00200	RSTQ-03x-00200	RSRY-708-00625	7
3.1520 - 3.1933	80.06 - 81.11	**RSKQ-200-xxxxx**	**RSKQ-100-xxxxx**	RSCQ-015-00202	RSTQ-03x-00202	RSRY-708-00625	7
3.1831 - 3.2240	80.85 - 81.89	**RSKQ-200-xxxxx**	**RSKQ-100-xxxxx**	RSCQ-015-00204	RSTQ-03x-00204	RSRY-708-00625	7
3.2138 - 3.2551	81.63 - 82.68	**RSKQ-200-xxxxx**	**RSKQ-100-xxxxx**	RSCQ-015-00206	RSTQ-03x-00198	RSRY-708-00687	7
3.2461 - 3.2870	82.45 - 83.49	**RSKQ-200-xxxxx**	**RSKQ-100-xxxxx**	RSCQ-015-00208	RSTQ-03x-00200	RSRY-708-00687	7
3.2772 - 3.3177	83.24 - 84.27	**RSKQ-200-xxxxx**	**RSKQ-100-xxxxx**	RSCQ-015-00210	RSTQ-03x-00202	RSRY-708-00687	7
3.3079 - 3.3492	84.02 - 85.07	**RSKQ-200-xxxxx**	**RSKQ-100-xxxxx**	RSCQ-015-00212	RSTQ-03x-00204	RSRY-708-00687	7

*xxxxx = Indicate to 2 metric decimal places the size to be burnished (e.g. roller burnisher Ø 75.00 mm with MT.3 shank: RSKQ-200-07500).
**x = A number that will vary from 2 to 8 depending upon the exact diameter to be burnished. See page D: 6 for the correct identification of the "x" value.
NOTE: Each roller burnishing tool comes assembled complete with cage, cone, and rolls.

D: 42 - 45
Key on D: 1
D: 40 - 41
D: 39

Roller Burnishing Tools | Through Holes

R Series | Diameter Range: 3.3390" - 4.0992" (84.81 mm - 104.12 mm)

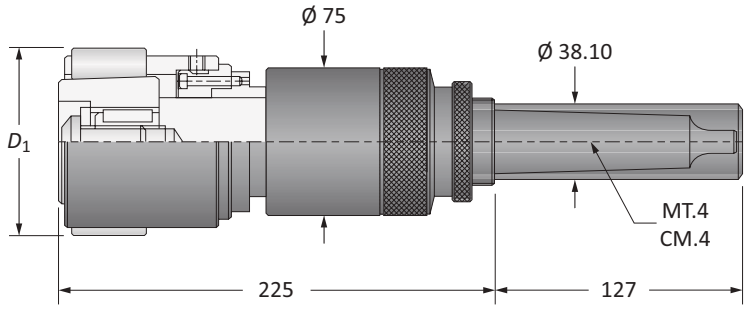

Through Holes

D_1		Part No.		Spare Parts			
Imperial (in)	Metric (mm)	Assembly with Morse Taper Shank	Assembly with Straight Shank	Cage	Cone	Rolls	Qty Rolls
3.3390 - 3.3799	84.81 - 85.85	**RDKR-200-08481**	**RDKR-100-08481**	RDCR-011-00214	RDTR-073-00001	RDRY-701-00468	9
3.3713 - 3.4118	85.63 - 86.66	**RDKR-200-08563**	**RDKR-100-08563**	RDCR-011-00216	RDTR-074-00001	RDRY-701-00468	9
3.4020 - 3.4429	86.41 - 87.45	**RDKR-200-08641**	**RDKR-100-08641**	RDCR-011-00218	RDTR-071-00001	RDRY-701-00531	9
3.4331 - 3.4740	87.20 - 88.24	**RDKR-200-08720**	**RDKR-100-08720**	RDCR-011-00220	RDTR-072-00001	RDRY-701-00531	9
3.4642 - 3.5051	87.99 - 89.03	**RDKR-200-08799**	**RDKR-100-08799**	RDCR-011-00222	RDTR-073-00001	RDRY-701-00531	9
3.4957 - 3.5370	88.79 - 89.84	**RDKR-200-08879**	**RDKR-100-08879**	RDCR-011-00224	RDTR-074-00001	RDRY-701-00531	9
3.5272 - 3.5681	89.59 - 90.63	**RDKR-200-08959**	**RDKR-100-08959**	RDCR-011-00226	RDTR-075-00001	RDRY-701-00531	9
3.5579 - 3.5992	90.37 - 91.42	**RDKR-200-09037**	**RDKR-100-09037**	RDCR-011-00228	RDTR-076-00001	RDRY-701-00531	9
3.5890 - 3.6299	91.16 - 92.20	**RDKR-200-09116**	**RDKR-100-09116**	RDCR-011-00230	RDTR-071-00001	RDRY-701-00625	9
3.6209 - 3.6622	91.97 - 93.02	**RDKR-200-09197**	**RDKR-100-09197**	RDCR-011-00232	RDTR-072-00001	RDRY-701-00625	9
3.6520 - 3.6929	92.76 - 93.80	**RDKR-200-09276**	**RDKR-100-09276**	RDCR-011-00234	RDTR-073-00001	RDRY-701-00625	9
3.6831 - 3.7240	93.55 - 94.59	**RDKR-200-09355**	**RDKR-100-09355**	RDCR-011-00236	RDTR-074-00001	RDRY-701-00625	9
3.7142 - 3.7551	94.34 - 95.38	**RDKR-200-09434**	**RDKR-100-09434**	RDCR-011-00238	RDTR-075-00001	RDRY-701-00625	9
3.7461 - 3.7870	95.15 - 96.19	**RDKR-200-09515**	**RDKR-100-09515**	RDCR-011-00240	RDTR-076-00001	RDRY-701-00625	9
3.7772 - 3.8181	95.94 - 96.98	**RDKR-200-09594**	**RDKR-100-09594**	RDCR-011-00242	RDTR-077-00001	RDRY-701-00625	9
3.8079 - 3.8492	96.72 - 97.77	**RDKR-200-09672**	**RDKR-100-09672**	RDCR-011-00244	RDTR-078-00001	RDRY-701-00625	9
3.8390 - 3.8799	97.51 - 98.55	**RDKR-200-09751**	**RDKR-100-09751**	RDCR-011-00246	RDTR-075-00001	RDRY-701-00687	9
3.8709 - 3.9122	98.32 - 99.37	**RDKR-200-09832**	**RDKR-100-09832**	RDCR-011-00248	RDTR-076-00001	RDRY-701-00687	9
3.9020 - 3.9429	99.11 - 100.15	**RDKR-200-09911**	**RDKR-100-09911**	RDCR-011-00250	RDTR-077-00001	RDRY-701-00687	9
3.9331 - 3.9740	99.90 - 100.94	**RDKR-200-09990**	**RDKR-100-09990**	RDCR-011-00252	RDTR-078-00001	RDRY-701-00687	9
3.9642 - 4.0051	100.69 - 101.73	**RDKR-200-10069**	**RDKR-100-10069**	RDCR-011-00254	RDTR-079-00001	RDRY-701-00687	9
3.9961 - 4.0370	101.50 - 102.54	**RDKR-200-10150**	**RDKR-100-10150**	RDCR-011-00256	RDTR-080-00001	RDRY-701-00687	9
4.0272 - 4.0681	102.29 - 103.33	**RDKR-200-10229**	**RDKR-100-10229**	RDCR-011-00258	RDTR-081-00001	RDRY-701-00687	9
4.0579 - 4.0992	103.07 - 104.12	**RDKR-200-10307**	**RDKR-100-10307**	RDCR-011-00260	RDTR-082-00001	RDRY-701-00687	9

NOTE: Each roller burnishing tool comes assembled complete with cage, cone, and rolls.

D: 42 - 45

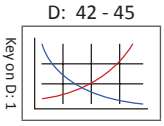

D: 40 - 41

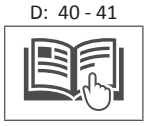

D: 38

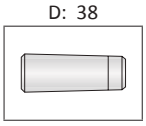

Roller Burnishing Tools | Blind Holes

R Series | Diameter Range: 3.3390" - 4.0992" (84.81 mm - 104.12 mm)

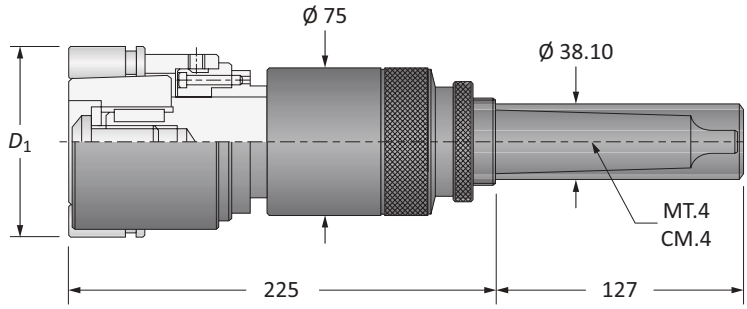

Blind Holes

D_1		Part No.*		Spare Parts			
Imperial (in)	Metric (mm)	Assembly with Morse Taper Shank	Assembly with Straight Shank	Cage	Cone**	Rolls	Qty Rolls
3.3390 - 3.3799	84.81 - 85.85	**RSKR-200-xxxxx**	**RSKR-100-xxxxx**	RSCR-015-00214	RSTR-073-0000x	RSRY-708-00468	9
3.3713 - 3.4118	85.63 - 86.66	**RSKR-200-xxxxx**	**RSKR-100-xxxxx**	RSCR-015-00216	RSTR-074-0000x	RSRY-708-00468	9
3.4020 - 3.4429	86.41 - 87.45	**RSKR-200-xxxxx**	**RSKR-100-xxxxx**	RSCR-015-00218	RSTR-071-0000x	RSRY-708-00531	9
3.4331 - 3.4740	87.20 - 88.24	**RSKR-200-xxxxx**	**RSKR-100-xxxxx**	RSCR-015-00220	RSTR-072-0000x	RSRY-708-00531	9
3.4642 - 3.5051	87.99 - 89.03	**RSKR-200-xxxxx**	**RSKR-100-xxxxx**	RSCR-015-00222	RSTR-073-0000x	RSRY-708-00531	9
3.4957 - 3.5370	88.79 - 89.84	**RSKR-200-xxxxx**	**RSKR-100-xxxxx**	RSCR-015-00224	RSTR-074-0000x	RSRY-708-00531	9
3.5272 - 3.5681	89.59 - 90.63	**RSKR-200-xxxxx**	**RSKR-100-xxxxx**	RSCR-015-00226	RSTR-075-0000x	RSRY-708-00531	9
3.5579 - 3.5992	90.37 - 91.42	**RSKR-200-xxxxx**	**RSKR-100-xxxxx**	RSCR-015-00228	RSTR-076-0000x	RSRY-708-00531	9
3.5890 - 3.6299	91.16 - 92.20	**RSKR-200-xxxxx**	**RSKR-100-xxxxx**	RSCR-015-00230	RSTR-071-0000x	RSRY-708-00625	9
3.6209 - 3.6622	91.97 - 93.02	**RSKR-200-xxxxx**	**RSKR-100-xxxxx**	RSCR-015-00232	RSTR-072-0000x	RSRY-708-00625	9
3.6520 - 3.6929	92.76 - 93.80	**RSKR-200-xxxxx**	**RSKR-100-xxxxx**	RSCR-015-00234	RSTR-073-0000x	RSRY-708-00625	9
3.6831 - 3.7240	93.55 - 94.59	**RSKR-200-xxxxx**	**RSKR-100-xxxxx**	RSCR-015-00236	RSTR-074-0000x	RSRY-708-00625	9
3.7142 - 3.7551	94.34 - 95.38	**RSKR-200-xxxxx**	**RSKR-100-xxxxx**	RSCR-015-00238	RSTR-075-0000x	RSRY-708-00625	9
3.7461 - 3.7870	95.15 - 96.19	**RSKR-200-xxxxx**	**RSKR-100-xxxxx**	RSCR-015-00240	RSTR-076-0000x	RSRY-708-00625	9
3.7772 - 3.8181	95.94 - 96.98	**RSKR-200-xxxxx**	**RSKR-100-xxxxx**	RSCR-015-00242	RSTR-077-0000x	RSRY-708-00625	9
3.8079 - 3.8492	96.72 - 97.77	**RSKR-200-xxxxx**	**RSKR-100-xxxxx**	RSCR-015-00244	RSTR-078-0000x	RSRY-708-00625	9
3.8390 - 3.8799	97.51 - 98.55	**RSKR-200-xxxxx**	**RSKR-100-xxxxx**	RSCR-015-00246	RSTR-075-0000x	RSRY-708-00687	9
3.8709 - 3.9122	98.32 - 99.37	**RSKR-200-xxxxx**	**RSKR-100-xxxxx**	RSCR-015-00248	RSTR-076-0000x	RSRY-708-00687	9
3.9020 - 3.9429	99.11 - 100.15	**RSKR-200-xxxxx**	**RSKR-100-xxxxx**	RSCR-015-00250	RSTR-077-0000x	RSRY-708-00687	9
3.9331 - 3.9740	99.90 - 100.94	**RSKR-200-xxxxx**	**RSKR-100-xxxxx**	RSCR-015-00252	RSTR-078-0000x	RSRY-708-00687	9
3.9642 - 4.0051	100.69 - 101.73	**RSKR-200-xxxxx**	**RSKR-100-xxxxx**	RSCR-015-00254	RSTR-079-0000x	RSRY-708-00687	9
3.9961 - 4.0370	101.50 - 102.54	**RSKR-200-xxxxx**	**RSKR-100-xxxxx**	RSCR-015-00256	RSTR-080-0000x	RSRY-708-00687	9
4.0272 - 4.0681	102.29 - 103.33	**RSKR-200-xxxxx**	**RSKR-100-xxxxx**	RSCR-015-00258	RSTR-081-0000x	RSRY-708-00687	9
4.0579 - 4.0992	103.07 - 104.12	**RSKR-200-xxxxx**	**RSKR-100-xxxxx**	RSCR-015-00260	RSTR-082-0000x	RSRY-708-00687	9

*xxxxx = Indicate to 2 metric decimal places the size to be burnished (e.g. roller burnisher Ø 100.00 mm with straight shank: RSKR-100-10000).
**x = A number that will vary from 2 to 8 depending upon the exact diameter to be burnished. See page D: 6 for the correct identification of the "x" value.
NOTE: Each roller burnishing tool comes assembled complete with cage, cone, and rolls.

D: 42 - 45 D: 40 - 41 D: 39
Key on D: 1

Roller Burnishing Tools | Through Holes

S Series | Diameter Range: 4.0890" - 5.0370" (103.86 mm - 127.94 mm)

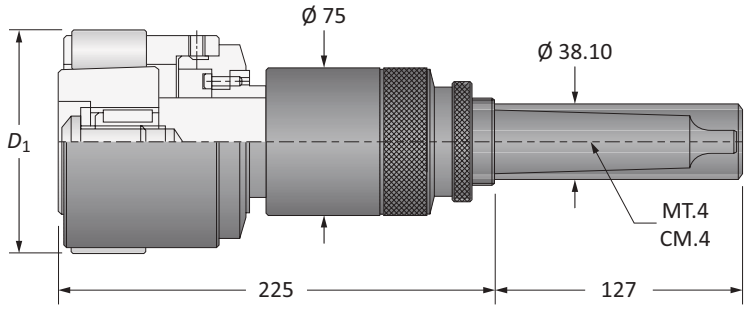

Through Holes

D_1		Part No.		Spare Parts			
Imperial (in)	Metric (mm)	Assembly with Morse Taper Shank	Assembly with Straight Shank	Cage	Cone	Rolls	Qty Rolls
4.0890 - 4.1299	103.86 - 104.90	**RDKS-200-10386**	**RDKS-100-10386**	RDCS-011-00262	RDTS-083-00001	RDRY-701-00687	9
4.1209 - 4.1634	104.67 - 105.75	**RDKS-200-10467**	**RDKS-100-10467**	RDCS-011-00264	RDTS-084-00001	RDRY-701-00687	9
4.1520 - 4.1929	105.46 - 106.50	**RDKS-200-10546**	**RDKS-100-10546**	RDCS-011-00266	RDTS-085-00001	RDRY-701-00687	9
4.1831 - 4.2240	106.25 - 107.29	**RDKS-200-10625**	**RDKS-100-10625**	RDCS-011-00268	RDTS-086-00001	RDRY-701-00687	9
4.2142 - 4.2551	107.04 - 108.08	**RDKS-200-10704**	**RDKS-100-10704**	RDCS-011-00270	RDTS-087-00001	RDRY-701-00687	9
4.2461 - 4.2870	107.85 - 108.89	**RDKS-200-10785**	**RDKS-100-10785**	RDCS-011-00272	RDTS-088-00001	RDRY-701-00687	9
4.2772 - 4.3181	108.64 - 109.68	**RDKS-200-10864**	**RDKS-100-10864**	RDCS-011-00274	RDTS-089-00001	RDRY-701-00687	9
4.3079 - 4.3492	109.42 - 110.47	**RDKS-200-10942**	**RDKS-100-10942**	RDCS-011-00276	RDTS-090-00001	RDRY-701-00687	9
4.3390 - 4.3799	110.21 - 111.25	**RDKS-200-11021**	**RDKS-100-11021**	RDCS-011-00278	RDTS-083-00001	RDRY-701-00812	9
4.3709 - 4.4122	111.02 - 112.07	**RDKS-200-11102**	**RDKS-100-11102**	RDCS-011-00280	RDTS-084-00001	RDRY-701-00812	9
4.4020 - 4.4429	111.81 - 112.85	**RDKS-200-11181**	**RDKS-100-11181**	RDCS-011-00282	RDTS-085-00001	RDRY-701-00812	9
4.4331 - 4.4740	112.60 - 113.64	**RDKS-200-11260**	**RDKS-100-11260**	RDCS-011-00284	RDTS-086-00001	RDRY-701-00812	9
4.4622 - 4.5051	113.34 - 114.43	**RDKS-200-11334**	**RDKS-100-11334**	RDCS-011-00286	RDTS-087-00001	RDRY-701-00812	9
4.4961 - 4.5370	114.20 - 115.24	**RDKS-200-11420**	**RDKS-100-11420**	RDCS-011-00288	RDTS-088-00001	RDRY-701-00812	9
4.5272 - 4.5681	114.99 - 116.03	**RDKS-200-11499**	**RDKS-100-11499**	RDCS-011-00290	RDTS-089-00001	RDRY-701-00812	9
4.5579 - 4.5992	115.77 - 116.82	**RDKS-200-11577**	**RDKS-100-11577**	RDCS-011-00292	RDTS-090-00001	RDRY-701-00812	9
4.5890 - 4.6299	116.56 - 117.60	**RDKS-200-11656**	**RDKS-100-11656**	RDCS-011-00294	RDTS-091-00001	RDRY-701-00812	9
4.6209 - 4.6622	117.37 - 118.42	**RDKS-200-11737**	**RDKS-100-11737**	RDCS-011-00296	RDTS-092-00001	RDRY-701-00812	9
4.6520 - 4.6929	118.16 - 119.20	**RDKS-200-11816**	**RDKS-100-11816**	RDCS-011-00298	RDTS-093-00001	RDRY-701-00812	9
4.6831 - 4.7240	118.95 - 119.99	**RDKS-200-11895**	**RDKS-100-11895**	RDCS-011-00300	RDTS-094-00001	RDRY-701-00812	9
4.7142 - 4.7551	119.74 - 120.78	**RDKS-200-11974**	**RDKS-100-11974**	RDCS-011-00302	RDTS-095-00001	RDRY-701-00812	9
4.7461 - 4.7870	120.55 - 121.59	**RDKS-200-12055**	**RDKS-100-12055**	RDCS-011-00304	RDTS-096-00001	RDRY-701-00812	9
4.7772 - 4.8181	121.34 - 122.38	**RDKS-200-12134**	**RDKS-100-12134**	RDCS-011-00306	RDTS-097-00001	RDRY-701-00812	9
4.8079 - 4.8492	122.12 - 123.17	**RDKS-200-12212**	**RDKS-100-12212**	RDCS-011-00308	RDTS-098-00001	RDRY-701-00812	9
4.8390 - 4.8799	122.91 - 123.95	**RDKS-200-12291**	**RDKS-100-12291**	RDCS-011-00310	RDTS-099-00001	RDRY-701-00812	9
4.8709 - 4.9122	123.72 - 124.77	**RDKS-200-12372**	**RDKS-100-12372**	RDCS-011-00312	RDTS-100-00001	RDRY-701-00812	9
4.9020 - 4.9429	124.51 - 125.55	**RDKS-200-12451**	**RDKS-100-12451**	RDCS-011-01245	RDTS-031-01245	RDRY-701-00812	9
4.9331 - 4.9740	125.30 - 126.34	**RDKS-200-12530**	**RDKS-100-12530**	RDCS-011-01255	RDTS-031-01255	RDRY-701-00812	9
4.9642 - 5.0051	126.09 - 127.13	**RDKS-200-12609**	**RDKS-100-12609**	RDCS-011-01265	RDTS-031-01265	RDRY-701-00812	9
4.9961 - 5.0370	126.90 - 127.94	**RDKS-200-12690**	**RDKS-100-12690**	RDCS-011-01275	RDTS-031-01275	RDRY-701-00812	9

NOTE: Each roller burnishing tool comes assembled complete with cage, cone, and rolls.

D: 42 - 45

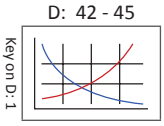

D: 40 - 41

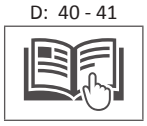

D: 38

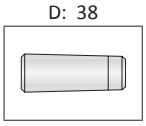

Roller Burnishing Tools | Blind Holes

S Series | Diameter Range: 4.0890" - 5.0370" (103.86 mm - 127.94 mm)

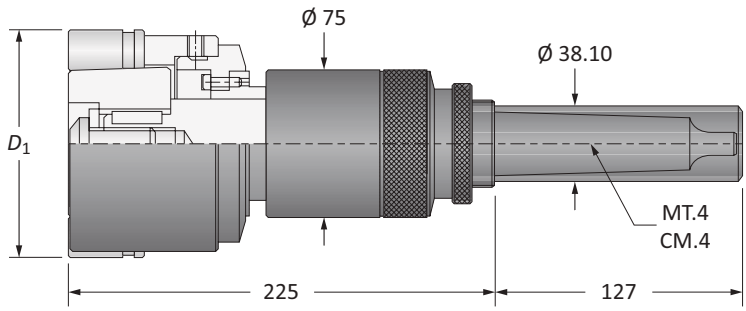

Blind Holes

D_1		Part No.*		Spare Parts			
Imperial (in)	Metric (mm)	Assembly with Morse Taper Shank	Assembly with Straight Shank	Cage	Cone**	Rolls	Qty Rolls
4.0890 - 4.1299	103.86 - 104.90	**RSKS-200-xxxxx**	**RSKS-100-xxxxx**	RSCS-015-00262	RSTS-083-0000x	RSRY-708-00687	9
4.1209 - 4.1634	104.67 - 105.75	**RSKS-200-xxxxx**	**RSKS-100-xxxxx**	RSCS-015-00264	RSTS-084-0000x	RSRY-708-00687	9
4.1520 - 4.1929	105.46 - 106.50	**RSKS-200-xxxxx**	**RSKS-100-xxxxx**	RSCS-015-00266	RSTS-085-0000x	RSRY-708-00687	9
4.1831 - 4.2240	106.25 - 107.29	**RSKS-200-xxxxx**	**RSKS-100-xxxxx**	RSCS-015-00268	RSTS-086-0000x	RSRY-708-00687	9
4.2142 - 4.2551	107.04 - 108.08	**RSKS-200-xxxxx**	**RSKS-100-xxxxx**	RSCS-015-00270	RSTS-087-0000x	RSRY-708-00687	9
4.2461 - 4.2870	107.85 - 108.89	**RSKS-200-xxxxx**	**RSKS-100-xxxxx**	RSCS-015-00272	RSTS-088-0000x	RSRY-708-00687	9
4.2772 - 4.3181	108.64 - 109.68	**RSKS-200-xxxxx**	**RSKS-100-xxxxx**	RSCS-015-00274	RSTS-089-0000x	RSRY-708-00687	9
4.3079 - 4.3492	109.42 - 110.47	**RSKS-200-xxxxx**	**RSKS-100-xxxxx**	RSCS-015-00276	RSTS-090-0000x	RSRY-708-00687	9
4.3390 - 4.3799	110.21 - 111.25	**RSKS-200-xxxxx**	**RSKS-100-xxxxx**	RSCS-015-00278	RSTS-083-0000x	RSRY-708-00812	9
4.3709 - 4.4122	111.02 - 112.07	**RSKS-200-xxxxx**	**RSKS-100-xxxxx**	RSCS-015-00280	RSTS-084-0000x	RSRY-708-00812	9
4.4020 - 4.4429	111.81 - 112.85	**RSKS-200-xxxxx**	**RSKS-100-xxxxx**	RSCS-015-00282	RSTS-085-0000x	RSRY-708-00812	9
4.4331 - 4.4740	112.60 - 113.64	**RSKS-200-xxxxx**	**RSKS-100-xxxxx**	RSCS-015-00284	RSTS-086-0000x	RSRY-708-00812	9
4.4622 - 4.5051	113.34 - 114.43	**RSKS-200-xxxxx**	**RSKS-100-xxxxx**	RSCS-015-00286	RSTS-087-0000x	RSRY-708-00812	9
4.4961 - 4.5370	114.20 - 115.24	**RSKS-200-xxxxx**	**RSKS-100-xxxxx**	RSCS-015-00288	RSTS-088-0000x	RSRY-708-00812	9
4.5272 - 4.5681	114.99 - 116.03	**RSKS-200-xxxxx**	**RSKS-100-xxxxx**	RSCS-015-00290	RSTS-089-0000x	RSRY-708-00812	9
4.5579 - 4.5992	115.77 - 116.82	**RSKS-200-xxxxx**	**RSKS-100-xxxxx**	RSCS-015-00292	RSTS-090-0000x	RSRY-708-00812	9
4.5890 - 4.6299	116.56 - 117.60	**RSKS-200-xxxxx**	**RSKS-100-xxxxx**	RSCS-015-00294	RSTS-091-0000x	RSRY-708-00812	9
4.6209 - 4.6622	117.37 - 118.42	**RSKS-200-xxxxx**	**RSKS-100-xxxxx**	RSCS-015-00296	RSTS-092-0000x	RSRY-708-00812	9
4.6520 - 4.6929	118.16 - 119.20	**RSKS-200-xxxxx**	**RSKS-100-xxxxx**	RSCS-015-00298	RSTS-093-0000x	RSRY-708-00812	9
4.6831 - 4.7240	118.95 - 119.99	**RSKS-200-xxxxx**	**RSKS-100-xxxxx**	RSCS-015-00300	RSTS-094-0000x	RSRY-708-00812	9
4.7142 - 4.7551	119.74 - 120.78	**RSKS-200-xxxxx**	**RSKS-100-xxxxx**	RSCS-015-00302	RSTS-095-0000x	RSRY-708-00812	9
4.7461 - 4.7870	120.55 - 121.59	**RSKS-200-xxxxx**	**RSKS-100-xxxxx**	RSCS-015-00304	RSTS-096-0000x	RSRY-708-00812	9
4.7772 - 4.8181	121.34 - 122.38	**RSKS-200-xxxxx**	**RSKS-100-xxxxx**	RSCS-015-00306	RSTS-097-0000x	RSRY-708-00812	9
4.8079 - 4.8492	122.12 - 123.17	**RSKS-200-xxxxx**	**RSKS-100-xxxxx**	RSCS-015-00308	RSTS-098-0000x	RSRY-708-00812	9
4.8390 - 4.8799	122.91 - 123.95	**RSKS-200-xxxxx**	**RSKS-100-xxxxx**	RSCS-015-00310	RSTS-099-0000x	RSRY-708-00812	9
4.8709 - 4.9122	123.72 - 124.77	**RSKS-200-xxxxx**	**RSKS-100-xxxxx**	RSCS-015-00312	RSTS-100-0000x	RSRY-708-00812	9
4.9020 - 4.9429	124.51 - 125.55	**RSKS-200-xxxxx**	**RSKS-100-xxxxx**	RSCS-015-01245	RSTS-03x-01245	RSRY-708-00812	9
4.9331 - 4.9740	125.30 - 126.34	**RSKS-200-xxxxx**	**RSKS-100-xxxxx**	RSCS-015-01255	RSTS-03x-01255	RSRY-708-00812	9
4.9642 - 5.0051	126.09 - 127.13	**RSKS-200-xxxxx**	**RSKS-100-xxxxx**	RSCS-015-01265	RSTS-03x-01265	RSRY-708-00812	9
4.9961 - 5.0370	126.90 - 127.94	**RSKS-200-xxxxx**	**RSKS-100-xxxxx**	RSCS-015-01275	RSTS-03x-01275	RSRY-708-00812	9

*xxxxx = Indicate to 2 metric decimal places the size to be burnished (e.g. roller burnisher Ø 120.05 mm with MT.4 shank: RSKS-200-12005).
**x = A number that will vary from 2 to 8 depending upon the exact diameter to be burnished. See page D: 6 for the correct identification of the "x" value.
NOTE: Each roller burnishing tool comes assembled complete with cage, cone, and rolls.

D: 42 - 45
Key on D: 1
D: 40 - 41
D: 39

Roller Burnishing Tools | Through Holes

T Series | Diameter Range: 5.0354" - 5.9016" (127.90 mm - 149.90 mm)

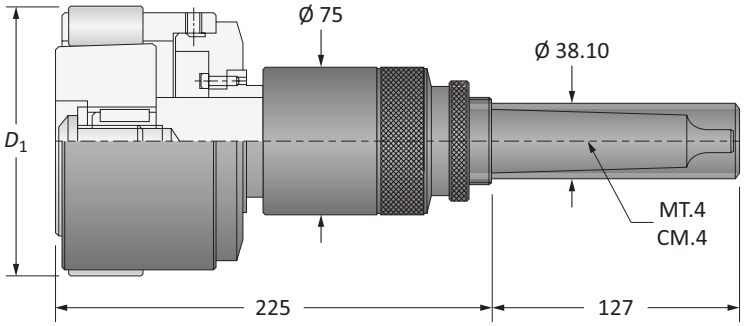

Through Holes

D_1		Part No.		Spare Parts			
Imperial (in)	Metric (mm)	Assembly with Morse Taper Shank	Assembly with Straight Shank	Cage	Cone	Rolls	Qty Rolls
5.0354 - 5.0748	127.90 - 128.90	**RDKT-200-12790**	**RDKT-100-12790**	RDCT-011-01280	RDTT-031-01280	RDRY-701-00812	11
5.0748 - 5.1142	128.90 - 129.90	**RDKT-200-12890**	**RDKT-100-12890**	RDCT-011-01290	RDTT-031-01290	RDRY-701-00812	11
5.1142 - 5.1535	129.90 - 130.90	**RDKT-200-12990**	**RDKT-100-12990**	RDCT-011-01300	RDTT-031-01300	RDRY-701-00812	11
5.1535 - 5.1929	130.90 - 131.90	**RDKT-200-13090**	**RDKT-100-13090**	RDCT-011-01310	RDTT-031-01310	RDRY-701-00812	11
5.1929 - 5.2323	131.90 - 132.90	**RDKT-200-13190**	**RDKT-100-13190**	RDCT-011-01320	RDTT-031-01320	RDRY-701-00812	11
5.2323 - 5.2717	132.90 - 133.90	**RDKT-200-13290**	**RDKT-100-13290**	RDCT-011-01330	RDTT-031-01330	RDRY-701-00812	11
5.2717 - 5.3110	133.90 - 134.90	**RDKT-200-13390**	**RDKT-100-13390**	RDCT-011-01340	RDTT-031-01340	RDRY-701-00812	11
5.3110 - 5.3504	134.90 - 135.90	**RDKT-200-13490**	**RDKT-100-13490**	RDCT-011-01350	RDTT-031-01350	RDRY-701-00812	11
5.3504 - 5.3898	135.90 - 136.90	**RDKT-200-13590**	**RDKT-100-13590**	RDCT-011-01360	RDTT-031-01360	RDRY-701-00812	11
5.3898 - 5.4291	136.90 - 137.90	**RDKT-200-13690**	**RDKT-100-13690**	RDCT-011-01370	RDTT-031-01370	RDRY-701-00812	11
5.4291 - 5.4685	137.90 - 138.90	**RDKT-200-13790**	**RDKT-100-13790**	RDCT-011-01380	RDTT-031-01380	RDRY-701-00812	11
5.4685 - 5.5079	138.90 - 139.90	**RDKT-200-13890**	**RDKT-100-13890**	RDCT-011-01390	RDTT-031-01390	RDRY-701-00812	11
5.5079 - 5.5472	139.90 - 140.90	**RDKT-200-13990**	**RDKT-100-13990**	RDCT-011-01400	RDTT-031-01400	RDRY-701-00812	11
5.5472 - 5.5866	140.90 - 141.90	**RDKT-200-14090**	**RDKT-100-14090**	RDCT-011-01410	RDTT-031-01410	RDRY-701-00812	11
5.5866 - 5.6260	141.60 - 142.90	**RDKT-200-14190**	**RDKT-100-14190**	RDCT-011-01420	RDTT-031-01420	RDRY-701-00812	11
5.6260 - 5.6654	142.90 - 143.90	**RDKT-200-14290**	**RDKT-100-14290**	RDCT-011-01430	RDTT-031-01430	RDRY-701-00812	11
5.6654 - 5.7047	143.90 - 144.90	**RDKT-200-14390**	**RDKT-100-14390**	RDCT-011-01440	RDTT-031-01440	RDRY-701-00812	11
5.7047 - 5.7441	144.90 - 145.90	**RDKT-200-14490**	**RDKT-100-14490**	RDCT-011-01450	RDTT-031-01450	RDRY-701-00812	11
5.7441 - 5.7835	145.90 - 146.90	**RDKT-200-14590**	**RDKT-100-14590**	RDCT-011-01460	RDTT-031-01460	RDRY-701-00812	11
5.7835 - 5.8228	146.90 - 147.90	**RDKT-200-14690**	**RDKT-100-14690**	RDCT-011-01470	RDTT-031-01470	RDRY-701-00812	11
5.8228 - 5.8622	147.90 - 148.90	**RDKT-200-14790**	**RDKT-100-14790**	RDCT-011-01480	RDTT-031-01480	RDRY-701-00812	11
5.8622 - 5.9016	148.90 - 149.90	**RDKT-200-14890**	**RDKT-100-14890**	RDCT-011-01490	RDTT-031-01490	RDRY-701-00812	11

NOTE: Each roller burnishing tool comes assembled complete with cage, cone, and rolls.

D: 42 - 45 | D: 40 - 41 | D: 38

Key on D: 1

Roller Burnishing Tools | Blind Holes

T Series | Diameter Range: 5.0354" - 5.9016" (127.90 mm - 149.90 mm)

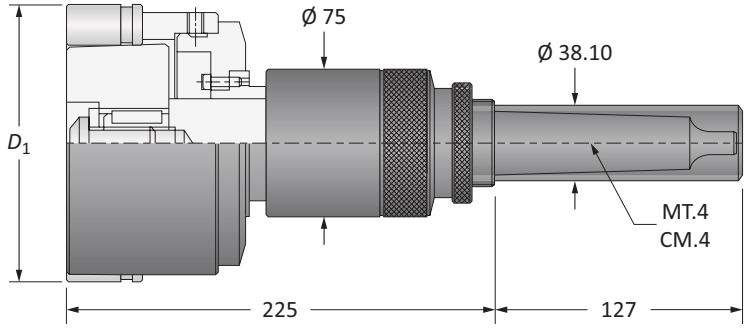

Blind Holes

D_1		Part No.*		Spare Parts			
Imperial (in)	Metric (mm)	Assembly with Morse Taper Shank	Assembly with Straight Shank	Cage	Cone**	Rolls	Qty Rolls
5.0354 - 5.0748	127.90 - 128.90	**RSKT-200-xxxxx**	**RSKT-100-xxxxx**	RSCT-015-01280	RSTT-0xx-01280	RSRY-708-00812	11
5.0748 - 5.1142	128.90 - 129.90	**RSKT-200-xxxxx**	**RSKT-100-xxxxx**	RSCT-015-01290	RSTT-0xx-01290	RSRY-708-00812	11
5.1142 - 5.1535	129.90 - 130.90	**RSKT-200-xxxxx**	**RSKT-100-xxxxx**	RSCT-015-01300	RSTT-0xx-01300	RSRY-708-00812	11
5.1535 - 5.1929	130.90 - 131.90	**RSKT-200-xxxxx**	**RSKT-100-xxxxx**	RSCT-015-01310	RSTT-0xx-01310	RSRY-708-00812	11
5.1929 - 5.2323	131.90 - 132.90	**RSKT-200-xxxxx**	**RSKT-100-xxxxx**	RSCT-015-01320	RSTT-0xx-01320	RSRY-708-00812	11
5.2323 - 5.2717	132.90 - 133.90	**RSKT-200-xxxxx**	**RSKT-100-xxxxx**	RSCT-015-01330	RSTT-0xx-01330	RSRY-708-00812	11
5.2717 - 5.3110	133.90 - 134.90	**RSKT-200-xxxxx**	**RSKT-100-xxxxx**	RSCT-015-01340	RSTT-0xx-01340	RSRY-708-00812	11
5.3110 - 5.3504	134.90 - 135.90	**RSKT-200-xxxxx**	**RSKT-100-xxxxx**	RSCT-015-01350	RSTT-0xx-01350	RSRY-708-00812	11
5.3504 - 5.3898	135.90 - 136.90	**RSKT-200-xxxxx**	**RSKT-100-xxxxx**	RSCT-015-01360	RSTT-0xx-01360	RSRY-708-00812	11
5.3898 - 5.4291	136.90 - 137.90	**RSKT-200-xxxxx**	**RSKT-100-xxxxx**	RSCT-015-01370	RSTT-0xx-01370	RSRY-708-00812	11
5.4291 - 5.4685	137.90 - 138.90	**RSKT-200-xxxxx**	**RSKT-100-xxxxx**	RSCT-015-01380	RSTT-0xx-01380	RSRY-708-00812	11
5.4685 - 5.5079	138.90 - 139.90	**RSKT-200-xxxxx**	**RSKT-100-xxxxx**	RSCT-015-01390	RSTT-0xx-01390	RSRY-708-00812	11
5.5079 - 5.5472	139.90 - 140.90	**RSKT-200-xxxxx**	**RSKT-100-xxxxx**	RSCT-015-01400	RSTT-0xx-01400	RSRY-708-00812	11
5.5472 - 5.5866	140.90 - 141.90	**RSKT-200-xxxxx**	**RSKT-100-xxxxx**	RSCT-015-01410	RSTT-0xx-01410	RSRY-708-00812	11
5.5866 - 5.6260	141.60 - 142.90	**RSKT-200-xxxxx**	**RSKT-100-xxxxx**	RSCT-015-01420	RSTT-0xx-01420	RSRY-708-00812	11
5.6260 - 5.6654	142.90 - 143.90	**RSKT-200-xxxxx**	**RSKT-100-xxxxx**	RSCT-015-01430	RSTT-0xx-01430	RSRY-708-00812	11
5.6654 - 5.7047	143.90 - 144.90	**RSKT-200-xxxxx**	**RSKT-100-xxxxx**	RSCT-015-01440	RSTT-0xx-01440	RSRY-708-00812	11
5.7047 - 5.7441	144.90 - 145.90	**RSKT-200-xxxxx**	**RSKT-100-xxxxx**	RSCT-015-01450	RSTT-0xx-01450	RSRY-708-00812	11
5.7441 - 5.7835	145.90 - 146.90	**RSKT-200-xxxxx**	**RSKT-100-xxxxx**	RSCT-015-01460	RSTT-0xx-01460	RSRY-708-00812	11
5.7835 - 5.8228	146.90 - 147.90	**RSKT-200-xxxxx**	**RSKT-100-xxxxx**	RSCT-015-01470	RSTT-0xx-01470	RSRY-708-00812	11
5.8228 - 5.8622	147.90 - 148.90	**RSKT-200-xxxxx**	**RSKT-100-xxxxx**	RSCT-015-01480	RSTT-0xx-01480	RSRY-708-00812	11
5.8622 - 5.9016	148.90 - 149.90	**RSKT-200-xxxxx**	**RSKT-100-xxxxx**	RSCT-015-01490	RSTT-0xx-01490	RSRY-708-00812	11

*xxxxx = Indicate to 2 metric decimal places the size to be burnished (e.g. roller burnisher Ø 140.00 mm with straight shank: RSKT-100-14000).
**x = A number that will vary from 2 to 8 depending upon the exact diameter to be burnished. See page D: 6 for the correct identification of the "x" value.
NOTE: Each roller burnishing tool comes assembled complete with cage, cone, and rolls.

D: 42 - 45
Key on D: 1
D: 40 - 41
D: 39

A DRILLING
B BORING
C REAMING
D BURNISHING
E THREADING
X SPECIALS

Roller Burnishing Tools | Through Holes

U Series | Diameter Range: 5.9016" - 6.5315" (149.90 mm - 165.90 mm)

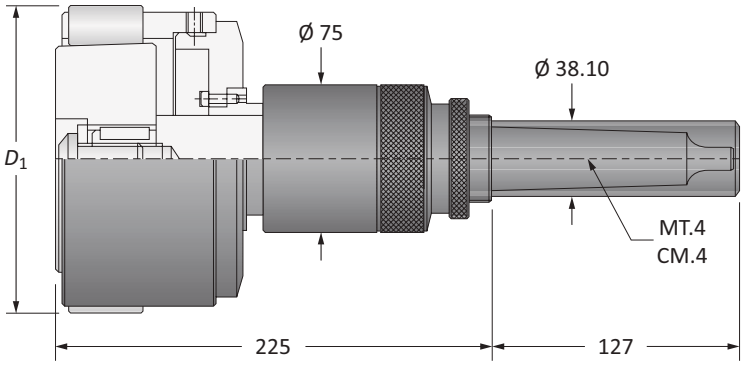

Through Holes

D_1		Part No.		Spare Parts			
Imperial (in)	Metric (mm)	Assembly with Morse Taper Shank	Assembly with Straight Shank	Cage	Cone	Rolls	Qty Rolls
5.9016 - 5.9409	149.90 - 150.90	**RDKU-200-14990**	**RDKU-100-14990**	RDCU-011-01500	RDTU-031-01500	RDRY-701-00812	13
5.9409 - 5.9803	150.90 - 151.90	**RDKU-200-15090**	**RDKU-100-15090**	RDCU-011-01510	RDTU-031-01510	RDRY-701-00812	13
5.9803 - 6.0197	151.90 - 152.90	**RDKU-200-15190**	**RDKU-100-15190**	RDCU-011-01520	RDTU-031-01520	RDRY-701-00812	13
6.0197 - 6.0591	152.90 - 153.90	**RDKU-200-15290**	**RDKU-100-15290**	RDCU-011-01530	RDTU-031-01530	RDRY-701-00812	13
6.0591 - 6.0984	153.90 - 154.90	**RDKU-200-15390**	**RDKU-100-15390**	RDCU-011-01540	RDTU-031-01540	RDRY-701-00812	13
6.0984 - 6.1378	154.90 - 155.90	**RDKU-200-15490**	**RDKU-100-15490**	RDCU-011-01550	RDTU-031-01550	RDRY-701-00812	13
6.1378 - 6.1772	155.90 - 156.90	**RDKU-200-15590**	**RDKU-100-15590**	RDCU-011-01560	RDTU-031-01560	RDRY-701-00812	13
6.1772 - 6.2165	156.90 - 157.90	**RDKU-200-15690**	**RDKU-100-15690**	RDCU-011-01570	RDTU-031-01570	RDRY-701-00812	13
6.2165 - 6.2559	157.90 - 158.90	**RDKU-200-15790**	**RDKU-100-15790**	RDCU-011-01580	RDTU-031-01580	RDRY-701-00812	13
6.2559 - 6.2953	158.90 - 159.90	**RDKU-200-15890**	**RDKU-100-15890**	RDCU-011-01590	RDTU-031-01590	RDRY-701-00812	13
6.2953 - 6.3346	159.90 - 160.90	**RDKU-200-15990**	**RDKU-100-15990**	RDCU-011-01600	RDTU-031-01600	RDRY-701-00812	13
6.3346 - 6.3740	160.90 - 161.90	**RDKU-200-16090**	**RDKU-100-16090**	RDCU-011-01610	RDTU-031-01610	RDRY-701-00812	13
6.3740 - 6.4134	161.90 - 162.90	**RDKU-200-16190**	**RDKU-100-16190**	RDCU-011-01620	RDTU-031-01620	RDRY-701-00812	13
6.4134 - 6.4528	162.90 - 163.90	**RDKU-200-16290**	**RDKU-100-16290**	RDCU-011-01630	RDTU-031-01630	RDRY-701-00812	13
6.4528 - 6.4921	163.90 - 164.90	**RDKU-200-16390**	**RDKU-100-16390**	RDCU-011-01640	RDTU-031-01640	RDRY-701-00812	13
6.4921 - 6.5315	164.90 - 165.90	**RDKU-200-16490**	**RDKU-100-16490**	RDCU-011-01650	RDTU-031-01650	RDRY-701-00812	13

NOTE: Each roller burnishing tool comes assembled complete with cage, cone, and rolls.

D: 42 - 45 D: 40 - 41 D: 38

Key on D: 1

Roller Burnishing Tools | Blind Holes

U Series | Diameter Range: 5.9016" - 6.5315" (149.90 mm - 165.90 mm)

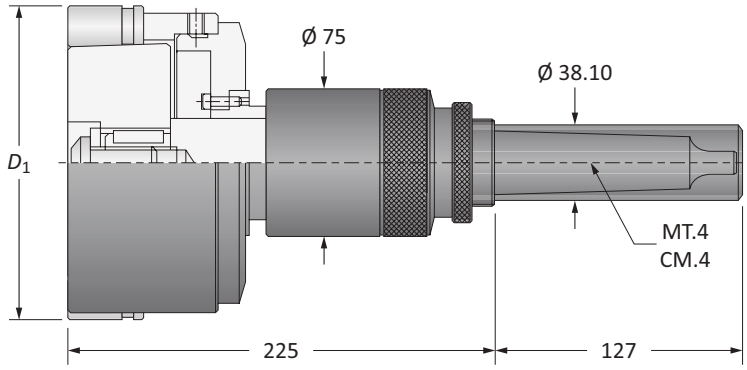

Blind Holes

D_1		Part No.*		Spare Parts			
Imperial (in)	Metric (mm)	Assembly with Morse Taper Shank	Assembly with Straight Shank	Cage	Cone**	Rolls	Qty Rolls
5.9016 - 5.9409	149.90 - 150.90	**RSKU-200-xxxxx**	**RSKU-100-xxxxx**	RSCU-015-01500	RSTU-0xx-01500	RSRY-708-00812	13
5.9409 - 5.9803	150.90 - 151.90	**RSKU-200-xxxxx**	**RSKU-100-xxxxx**	RSCU-015-01510	RSTU-0xx-01510	RSRY-708-00812	13
5.9803 - 6.0197	151.90 - 152.90	**RSKU-200-xxxxx**	**RSKU-100-xxxxx**	RSCU-015-01520	RSTU-0xx-01520	RSRY-708-00812	13
6.0197 - 6.0591	152.90 - 153.90	**RSKU-200-xxxxx**	**RSKU-100-xxxxx**	RSCU-015-01530	RSTU-0xx-01530	RSRY-708-00812	13
6.0591 - 6.0984	153.90 - 154.90	**RSKU-200-xxxxx**	**RSKU-100-xxxxx**	RSCU-015-01540	RSTU-0xx-01540	RSRY-708-00812	13
6.0984 - 6.1378	154.90 - 155.90	**RSKU-200-xxxxx**	**RSKU-100-xxxxx**	RSCU-015-01550	RSTU-0xx-01550	RSRY-708-00812	13
6.1378 - 6.1772	155.90 - 156.90	**RSKU-200-xxxxx**	**RSKU-100-xxxxx**	RSCU-015-01560	RSTU-0xx-01560	RSRY-708-00812	13
6.1772 - 6.2165	156.90 - 157.90	**RSKU-200-xxxxx**	**RSKU-100-xxxxx**	RSCU-015-01570	RSTU-0xx-01570	RSRY-708-00812	13
6.2165 - 6.2559	157.90 - 158.90	**RSKU-200-xxxxx**	**RSKU-100-xxxxx**	RSCU-015-01580	RSTU-0xx-01580	RSRY-708-00812	13
6.2559 - 6.2953	158.90 - 159.90	**RSKU-200-xxxxx**	**RSKU-100-xxxxx**	RSCU-015-01590	RSTU-0xx-01590	RSRY-708-00812	13
6.2953 - 6.3346	159.90 - 160.90	**RSKU-200-xxxxx**	**RSKU-100-xxxxx**	RSCU-015-01600	RSTU-0xx-01600	RSRY-708-00812	13
6.3346 - 6.3740	160.90 - 161.90	**RSKU-200-xxxxx**	**RSKU-100-xxxxx**	RSCU-015-01610	RSTU-0xx-01610	RSRY-708-00812	13
6.3740 - 6.4134	161.90 - 162.90	**RSKU-200-xxxxx**	**RSKU-100-xxxxx**	RSCU-015-01620	RSTU-0xx-01620	RSRY-708-00812	13
6.4134 - 6.4528	162.90 - 163.90	**RSKU-200-xxxxx**	**RSKU-100-xxxxx**	RSCU-015-01630	RSTU-0xx-01630	RSRY-708-00812	13
6.4528 - 6.4921	163.90 - 164.90	**RSKU-200-xxxxx**	**RSKU-100-xxxxx**	RSCU-015-01640	RSTU-0xx-01640	RSRY-708-00812	13
6.4921 - 6.5315	164.90 - 165.90	**RSKU-200-xxxxx**	**RSKU-100-xxxxx**	RSCU-015-01650	RSTU-0xx-01650	RSRY-708-00812	13

*xxxxx = Indicate to 2 metric decimal places the size to be burnished (e.g. roller burnisher Ø 160.00 mm with MT.4 shank: RSKU-200-16000).
**x = A number that will vary from 2 to 8 depending upon the exact diameter to be burnished. See page D: 6 for the correct identification of the "x" value.
NOTE: Each roller burnishing tool comes assembled complete with cage, cone, and rolls.

D: 42 - 45
Key on D: 1
D: 40 - 41
D: 39

Rolls

Through Holes

Rolls 704 and 707

Part No.	Imperial (in) D	Imperial (in) L	Metric (mm) D	Metric (mm) L
RDRY-704-00047	0.0465	0.2500	1.18	6.35
RDRY-704-00062	0.0618	0.2500	1.57	6.35
RDRY-704-00070	0.0697	0.3126	1.77	7.94
RDRY-704-00078	0.0776	0.3752	1.97	9.53
RDRY-704-00086	0.0854	0.3752	2.17	9.53
RDRY-704-00093	0.0929	0.3752	2.36	9.53
RDRY-704-00109	0.1083	0.5000	2.75	12.70
RDRY-704-00125	0.1244	0.5000	3.16	12.70
RDRY-704-00148	0.1472	0.5000	3.74	12.70
RDRY-704-00156	0.1555	0.5000	3.95	12.70
RDRY-704-00172	0.1709	0.6252	4.34	15.88
RDRY-704-00187	0.1858	0.8772	4.72	22.28
RDRY-707-00187	0.1870	0.5000	4.75	12.70
RDRY-704-00218	0.2173	0.5000	5.52	12.70
RDRY-707-00218	0.2173	1.0000	5.52	25.40
RDRY-704-00265	0.2638	1.1252	6.70	28.58
RDRY-704-00312	0.3110	1.5000	7.90	38.10
RDRY-707-00312	0.3118	1.1252	7.92	28.58
RDRY-704-00406	0.4047	1.5000	10.28	38.10
RDRY-704-00468	0.4669	1.5000	11.86	38.10
RDRY-704-00531	0.5299	1.5000	13.46	38.10
RDRY-704-00625	0.6240	1.5000	15.85	38.10
RDRY-704-00687	0.6858	1.5000	17.42	38.10
RDRY-704-00812	0.8110	1.5000	20.60	38.10

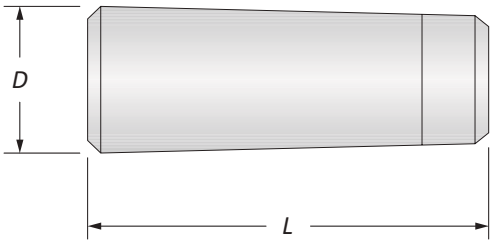

Rolls 701

Part No.	Imperial (in) D	Imperial (in) L	Metric (mm) D	Metric (mm) L
RDRY-701-00187	0.1831	0.8772	4.65	22.28
RDRY-701-00218	0.2138	1.0000	5.43	25.40
RDRY-701-00265	0.2610	1.1252	6.63	28.58
RDRY-701-00312	0.3039	1.5000	7.72	38.10
RDRY-701-00406	0.3980	1.5000	10.11	38.10
RDRY-701-00468	0.4598	1.5000	11.68	38.10
RDRY-701-00531	0.5228	1.5000	13.28	38.10
RDRY-701-00625	0.6169	1.5000	15.67	38.10
RDRY-701-00687	0.6799	1.5000	17.27	38.10
RDRY-701-00812	0.8039	1.5000	20.42	38.10

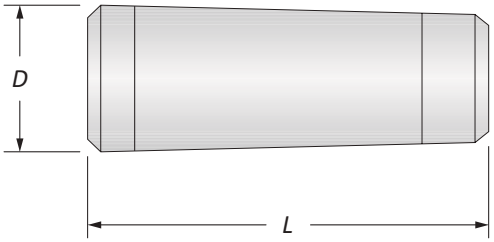

Rolls

Blind Holes

Rolls 708

Part No.	Imperial (in)		Metric (mm)	
	D	*L*	*D*	*L*
RSRY-708-00086	0.0854	0.3752	2.17	9.53
RSRY-708-00125	0.1244	0.5000	3.16	12.70
RSRY-708-00156	0.1555	0.5000	3.95	12.70
RSRY-708-00172	0.1709	0.6252	4.35	15.88
RSRY-708-00187	0.1858	0.8772	4.72	22.28
RSRY-708-00218	0.2173	0.5000	5.52	25.40
RSRY-708-00265	0.2638	1.1252	6.70	28.58
RSRY-708-00312	0.3110	1.5000	7.90	38.10
RSRY-708-00406	0.4047	1.5000	10.29	38.10
RSRY-708-00468	0.4669	1.5000	11.86	38.10
RSRY-708-00531	0.5299	1.5000	13.46	38.10
RSRY-708-00625	0.6240	1.5000	15.85	38.10
RSRY-708-00687	0.6858	1.5000	17.42	38.10
RSRY-708-00812	0.8110	1.5000	20.60	38.10

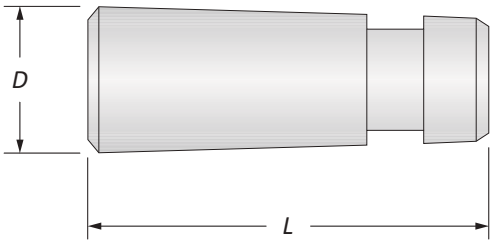

Diameter Adjustment

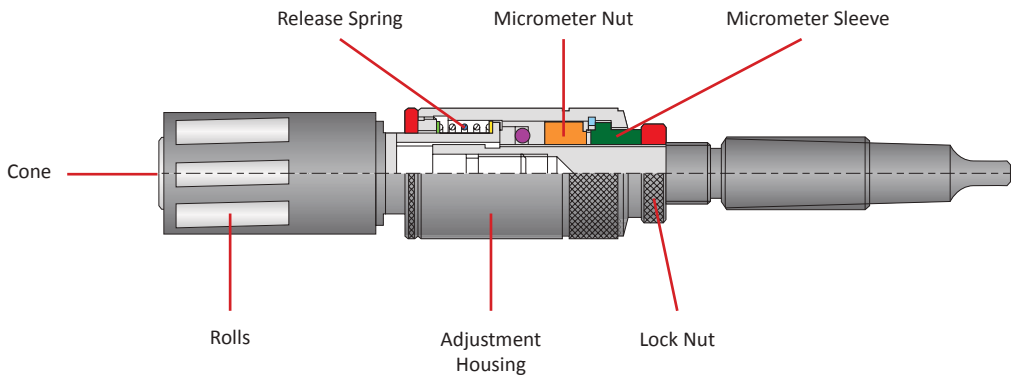

Adjustment

The roller burnishing tool incorporates a shank, a body, and a planetary system of conical rolls that are evenly spaced by a retaining cage.

1. Unscrew the lock nut.
2. Pull the housing toward the lock nut and rotate to increase or decrease the diameter.
3. Tighten the lock nut.

IMPORTANT: As you increase the diameter, the cone moves forward, pushing the rolls outward. Because of this, the cone will protrude from the end of the cage, decreasing the clearance available in blind holes (see Figures 1 and 2).

Refer to chart below for clearance values.

Figure 1

Through Hole Tool **Blind Hole Tool**

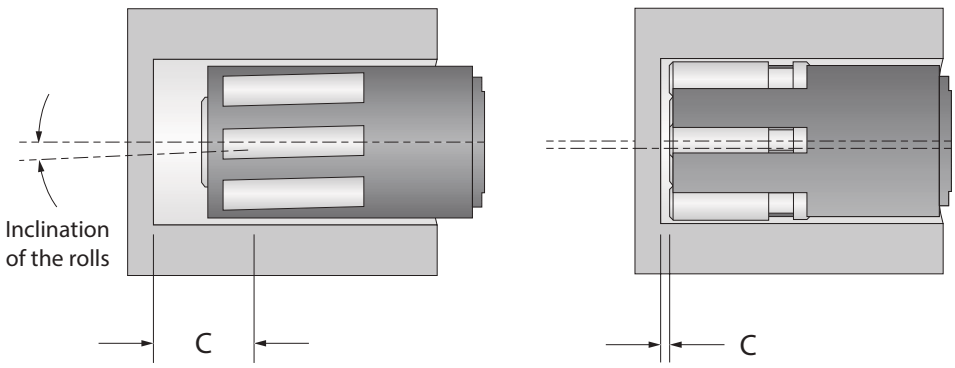

Figure 2

Larger Diameter = Extruded Cone = Decreased Clearance

Adjustment Range		Clearance (C)		
		Through Holes		Blind Holes
Imperial (inch)	Metric (mm)	Rolls 701	Rolls 704 / 707	Rolls 708
0.1850 - 0.2315	4.70 - 5.88	–	2.40	–
0.2319 - 0.3728	5.89 - 9.47	–	2.40	0.60
0.3732 - 0.6236	9.48 - 15.84	–	2.40	0.60
0.6240 - 1.1236	15.85 - 28.54	5.40	3.20	1.00
1.1240 - 1.8385	28.55 - 46.70	9.50	3.20	1.00
1.8390 - 3.3386	46.71 - 84.80	9.50	4.00	1.00
3.3390 - 6.5315	84.81 - 165.90	10.30	4.70	1.00

How it Works

Roller Burnishing Tools

The roller burnishing tool must be aligned with the workpiece (maximum error = 0.1 mm).

NOTE: If you are uncertain about the alignment error, a floating shank is recommended.

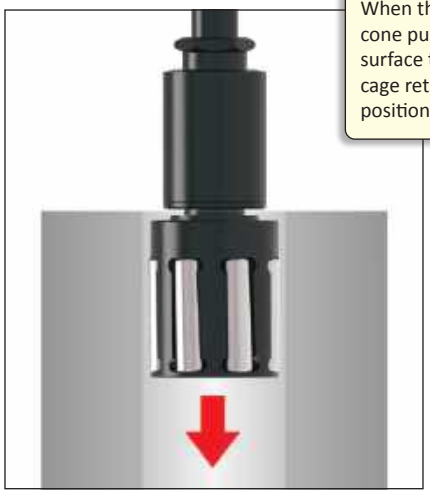

When the tool is in the hole, the cone pushes the rolls onto the surface to be burnished. The cage retains the rolls in an angled position to the axis of the tool.

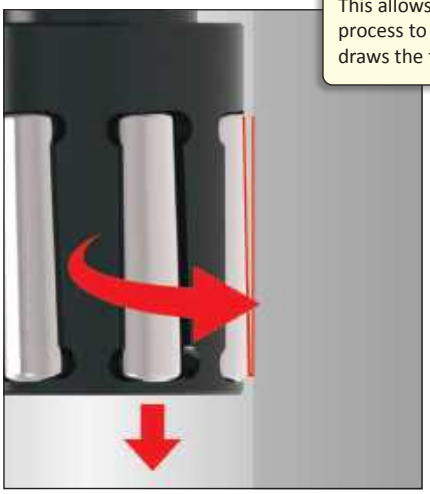

This allows the pressure of the process to generate a self-feed that draws the tool into the hole.

NOTE: When self-feed is not required (blind hole applications), you must use a cage that holds the rolls parallel with the axis of the tool.

If the machine feed is stopped or slower than the natural rate, the rolls pull the cage (held in position by the release spring) and then release from the surface of the hole.

When retracting the tool, the release spring ensures the cage is withdrawn from the cone, which removes pressure from the rolls. This allows the tool to be retracted at a high feed rate.

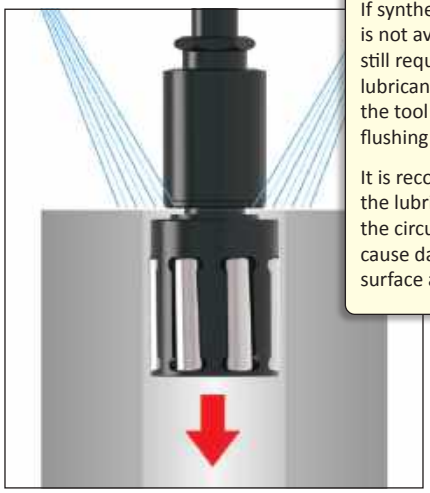

If synthetic or water soluble coolant is not available, a lubrication is still required. A plentiful supply of lubricant must be fed directly to the tool in order to provide a good flushing and cleaning action.

It is recommended to fit a filter to the lubrication system to prevent the circulation of chips, which may cause damage to the burnished surface and/or the tool.

Recommended Cutting Data | Imperial (inch)

Roller Burnishing

ISO	Material	Hardness (BHN)	Speed (SFM)	Recommended Feed (IPR) by Burnisher Diameter			
				0.1850" - 0.4724"	0.4725" - 0.9843"	0.9844" - 1.9685"	1.9686" - 6.5315"
P	**Free-Machining Steel**	100 - 180	75 - 300	0.005 - 0.020	0.014 - 0.037	0.032 - 0.086	0.070 - 0.121
	1118, 1215, 12L14, etc.	180 - 250	75 - 300	0.005 - 0.020	0.014 - 0.037	0.032 - 0.086	0.070 - 0.121
	Low-Carbon Steel	85 - 180	75 - 300	0.005 - 0.020	0.014 - 0.037	0.032 - 0.086	0.070 - 0.121
	1010, 1020, 1025, 1522, 1144, etc.	180 - 275	75 - 300	0.005 - 0.020	0.014 - 0.037	0.032 - 0.086	0.070 - 0.121
	Medium-Carbon Steel	125 - 180	75 - 300	0.005 - 0.020	0.014 - 0.037	0.032 - 0.086	0.070 - 0.121
	1030, 1040, 1050, 1527, 1140, 1151, etc.	180 - 325	75 - 300	0.005 - 0.020	0.014 - 0.037	0.032 - 0.086	0.070 - 0.121
	Alloy Steel	125 - 180	75 - 300	0.005 - 0.020	0.014 - 0.037	0.032 - 0.086	0.070 - 0.121
	4140, 5140, 8640, etc.	180 - 375	75 - 300	0.005 - 0.020	0.014 - 0.037	0.032 - 0.086	0.070 - 0.121
	High-Strength Alloy 4340, 4330V, 300M, etc.	240 - 450	75 - 300	0.005 - 0.020	0.014 - 0.037	0.032 - 0.086	0.070 - 0.121
	Structural Steel	125 - 180	75 - 300	0.005 - 0.020	0.014 - 0.037	0.032 - 0.086	0.070 - 0.121
	A36, A285, A516, etc.	180 - 350	75 - 300	0.005 - 0.020	0.014 - 0.037	0.032 - 0.086	0.070 - 0.121
	Tool Steel	150 - 200	75 - 300	0.005 - 0.020	0.014 - 0.037	0.032 - 0.086	0.070 - 0.121
	H-13, H-21, A-4, 0-2, S-3, etc.	200 - 250	75 - 300	0.005 - 0.020	0.014 - 0.037	0.032 - 0.086	0.070 - 0.121
S	**High-Temp Alloy** Hastelloy B, Inconel 600, etc.	140 - 310	50 - 150	0.005 - 0.020	0.014 - 0.037	0.032 - 0.086	0.070 - 0.121
	Titanium Alloy	140 - 310	50 - 150	0.005 - 0.020	0.014 - 0.037	0.032 - 0.086	0.070 - 0.121
M	**Stainless Steel 400 Series** 416, 420, etc.	135 - 350	75 - 200	0.005 - 0.020	0.014 - 0.037	0.032 - 0.086	0.070 - 0.121
	Stainless Steel 300 Series 304, 316, 17-4PH, etc.	135 - 275	75 - 200	0.005 - 0.020	0.014 - 0.037	0.032 - 0.086	0.070 - 0.121
K	**Grey Cast Iron, Ductile Iron,**	< 200	75 - 300	0.005 - 0.020	0.014 - 0.037	0.032 - 0.086	0.070 - 0.121
	Spheroidal Cast Iron (Pearlitic)	> 200	75 - 300	0.005 - 0.020	0.014 - 0.037	0.032 - 0.086	0.070 - 0.121
	Spheroidal Cast Iron (Ferritic)	260 - 320	75 - 300	0.005 - 0.020	0.014 - 0.037	0.032 - 0.086	0.070 - 0.121
N	**Copper and Alloys Brass**	< 500	150 - 350	0.005 - 0.020	0.014 - 0.037	0.032 - 0.086	0.070 - 0.121
	Bronze Bronze Phosphorous	< 180	150 - 350	0.005 - 0.020	0.014 - 0.037	0.032 - 0.086	0.070 - 0.121
	Aluminum and Alloys	< 150	150 - 350	0.005 - 0.020	0.014 - 0.037	0.032 - 0.086	0.070 - 0.121

Max RPM

Series	Max RPM
H	2000
I	1500
K	1200
L	1000
F	1000
M	900
N	900
O	700
P	600
Q	500
R	300
S	300
T	250
U	200

IMPORTANT: The speeds and feeds listed on these pages are a general starting point for all applications. Factory technical assistance is also available for specific applications through our Application Engineering department. *ext:* **7611** | *email:* **appeng@alliedmachine.com**

Stock Allowance | Imperial (inch)

Roller Burnishing

ISO	Material	Hardness (BHN)	Recommended Stock (inch) by Burnisher Diameter*			
			0.1850" - 0.4724"	0.4725" - 0.9843"	0.9844" - 1.9685"	1.9686" - 6.5315"
P	**Free-Machining Steel**	100 - 180	0.0004 - 0.0007	0.0007 - 0.0016	0.0010 - 0.0018	0.0012 - 0.0020
	1118, 1215, 12L14, etc.	180 - 250	0.0004 - 0.0007	0.0007 - 0.0016	0.0010 - 0.0018	0.0012 - 0.0020
	Low-Carbon Steel	85 - 180	0.0004 - 0.0007	0.0007 - 0.0016	0.0010 - 0.0018	0.0012 - 0.0020
	1010, 1020, 1025, 1522, 1144, etc.	180 - 275	0.0004 - 0.0007	0.0007 - 0.0016	0.0010 - 0.0018	0.0012 - 0.0020
	Medium-Carbon Steel	125 - 180	0.0004 - 0.0007	0.0007 - 0.0016	0.0010 - 0.0018	0.0012 - 0.0020
	1030, 1040, 1050, 1527, 1140, 1151, etc.	180 - 325	0.0004 - 0.0007	0.0005 - 0.0007	0.0005 - 0.0010	0.0008 - 0.0014
	Alloy Steel	125 - 180	0.0004 - 0.0007	0.0007 - 0.0016	0.0010 - 0.0018	0.0012 - 0.0020
	4140, 5140, 8640, etc.	180 - 375	0.0004 - 0.0007	0.0005 - 0.0007	0.0005 - 0.0010	0.0008 - 0.0014
	High-Strength Alloy 4340, 4330V, 300M, etc.	240 - 450	0.0004 - 0.0007	0.0005 - 0.0007	0.0005 - 0.0010	0.0008 - 0.0014
	Structural Steel	125 - 180	0.0004 - 0.0007	0.0007 - 0.0016	0.0010 - 0.0018	0.0012 - 0.0020
	A36, A285, A516, etc.	180 - 350	0.0004 - 0.0007	0.0005 - 0.0007	0.0005 - 0.0010	0.0008 - 0.0014
	Tool Steel	150 - 200	0.0004 - 0.0007	0.0007 - 0.0016	0.0010 - 0.0018	0.0012 - 0.0020
	H-13, H-21, A-4, 0-2, S-3, etc.	200 - 250	0.0004 - 0.0007	0.0005 - 0.0007	0.0005 - 0.0010	0.0008 - 0.0014
S	**High-Temp Alloy** Hastelloy B, Inconel 600, etc.	140 - 310	0.0004 - 0.0007	0.0005 - 0.0007	0.0005 - 0.0010	0.0008 - 0.0014
	Titanium Alloy	140 - 310	0.0004 - 0.0007	0.0005 - 0.0007	0.0005 - 0.0010	0.0008 - 0.0014
M	**Stainless Steel 400 Series** 416, 420, etc.	135 - 350	0.0004 - 0.0007	0.0007 - 0.0016	0.0010 - 0.0018	0.0012 - 0.0020
	Stainless Steel 300 Series 304, 316, 17-4PH, etc.	135 - 275	0.0004 - 0.0007	0.0007 - 0.0016	0.0010 - 0.0018	0.0012 - 0.0020
K	**Grey Cast Iron, Ductile Iron,**	< 200	0.0004 - 0.0007	0.0005 - 0.0007	0.0005 - 0.0010	0.0008 - 0.0014
	Spheroidal Cast Iron (Pearlitic)	> 200	0.0004 - 0.0007	0.0005 - 0.0007	0.0005 - 0.0010	0.0008 - 0.0014
	Spheroidal Cast Iron (Ferritic)	260 - 320	0.0004 - 0.0007	0.0005 - 0.0007	0.0005 - 0.0010	0.0008 - 0.0014
N	**Copper and Alloys** **Brass**	< 500	0.0004 - 0.0007	0.0007 - 0.0016	0.0010 - 0.0018	0.0012 - 0.0020
	Bronze **Bronze Phosphorous**	< 180	0.0004 - 0.0007	0.0007 - 0.0016	0.0010 - 0.0018	0.0012 - 0.0020
	Aluminum and Alloys	< 150	0.0004 - 0.0007	0.0007 - 0.0016	0.0010 - 0.0018	0.0012 - 0.0020

*Stock value is on diameter.

IMPORTANT: The speeds and feeds listed on these pages are a general starting point for all applications. Factory technical assistance is also available for specific applications through our Application Engineering department. *ext:* **7611** | *email:* **appeng@alliedmachine.com**

Recommended Cutting Data | Metric (mm)

Roller Burnishing

ISO	Material	Hardness (BHN)	Speed (m/min)	Recommended Feed (mm/rev) by Burnisher Diameter			
				4.70 mm - 12.00 mm	12.01 mm - 25.00 mm	25.01 mm - 50.00 mm	50.01 mm - 165.90 mm
P	**Free-Machining Steel**	100 - 180	22 - 90	0.13 - 0.51	0.36 - 0.94	0.81 - 2.18	1.78 - 3.07
	1118, 1215, 12L14, etc.	180 - 250	22 - 90	0.13 - 0.51	0.36 - 0.94	0.81 - 2.18	1.78 - 3.07
	Low-Carbon Steel	85 - 180	22 - 90	0.13 - 0.51	0.36 - 0.94	0.81 - 2.18	1.78 - 3.07
	1010, 1020, 1025, 1522, 1144, etc.	180 - 275	22 - 90	0.13 - 0.51	0.36 - 0.94	0.81 - 2.18	1.78 - 3.07
	Medium-Carbon Steel	125 - 180	22 - 90	0.13 - 0.51	0.36 - 0.94	0.81 - 2.18	1.78 - 3.07
	1030, 1040, 1050, 1527, 1140, 1151, etc.	180 - 325	22 - 90	0.13 - 0.51	0.36 - 0.94	0.81 - 2.18	1.78 - 3.07
	Alloy Steel	125 - 180	22 - 90	0.13 - 0.51	0.36 - 0.94	0.81 - 2.18	1.78 - 3.07
	4140, 5140, 8640, etc.	180 - 375	22 - 90	0.13 - 0.51	0.36 - 0.94	0.81 - 2.18	1.78 - 3.07
	High-Strength Alloy 4340, 4330V, 300M, etc.	240 - 450	22 - 90	0.13 - 0.51	0.36 - 0.94	0.81 - 2.18	1.78 - 3.07
	Structural Steel	125 - 180	22 - 90	0.13 - 0.51	0.36 - 0.94	0.81 - 2.18	1.78 - 3.07
	A36, A285, A516, etc.	180 - 350	22 - 90	0.13 - 0.51	0.36 - 0.94	0.81 - 2.18	1.78 - 3.07
	Tool Steel	150 - 200	22 - 90	0.13 - 0.51	0.36 - 0.94	0.81 - 2.18	1.78 - 3.07
	H-13, H-21, A-4, 0-2, S-3, etc.	200 - 250	22 - 90	0.13 - 0.51	0.36 - 0.94	0.81 - 2.18	1.78 - 3.07
S	**High-Temp Alloy** Hastelloy B, Inconel 600, etc.	140 - 310	15 - 45	0.13 - 0.51	0.36 - 0.94	0.81 - 2.18	1.78 - 3.07
	Titanium Alloy	140 - 310	15 - 45	0.13 - 0.51	0.36 - 0.94	0.81 - 2.18	1.78 - 3.07
M	**Stainless Steel 400 Series** 416, 420, etc.	135 - 350	22 - 60	0.13 - 0.51	0.36 - 0.94	0.81 - 2.18	1.78 - 3.07
	Stainless Steel 300 Series 304, 316, 17-4PH, etc.	135 - 275	22 - 60	0.13 - 0.51	0.36 - 0.94	0.81 - 2.18	1.78 - 3.07
K	**Grey Cast Iron, Ductile Iron,**	< 200	22 - 90	0.13 - 0.51	0.36 - 0.94	0.81 - 2.18	1.78 - 3.07
	Spheroidal Cast Iron (Pearlitic)	> 200	22 - 90	0.13 - 0.51	0.36 - 0.94	0.81 - 2.18	1.78 - 3.07
	Spheroidal Cast Iron (Ferritic)	260 - 320	22 - 90	0.13 - 0.51	0.36 - 0.94	0.81 - 2.18	1.78 - 3.07
N	**Copper and Alloys Brass**	< 500	45 - 105	0.13 - 0.51	0.36 - 0.94	0.81 - 2.18	1.78 - 3.07
	Bronze Bronze Phosphorous	< 180	45 - 105	0.13 - 0.51	0.36 - 0.94	0.81 - 2.18	1.78 - 3.07
	Aluminum and Alloys	< 150	45 - 105	0.13 - 0.51	0.36 - 0.94	0.81 - 2.18	1.78 - 3.07

Max RPM

Series	Max RPM
H	2000
I	1500
K	1200
L	1000
F	1000
M	900
N	900
O	700
P	600
Q	500
R	300
S	300
T	250
U	200

IMPORTANT: The speeds and feeds listed on these pages are a general starting point for all applications. Factory technical assistance is also available for specific applications through our Application Engineering department. *ext:* **7611** | *email:* **appeng@alliedmachine.com**

Stock Allowance | Metric (mm)

Roller Burnishing

ISO	Material	Hardness (BHN)	Recommended Stock (mm) by Burnisher Diameter* 4.70 mm - 12.0 0mm	12.01 mm - 25.00 mm	25.01 mm - 50.00 mm	50.01 mm - 165.90 mm
P	**Free-Machining Steel**	100 - 180	0.010 - 0.018	0.018 - 0.041	0.025 - 0.046	0.030 - 0.051
	1118, 1215, 12L14, etc.	180 - 250	0.010 - 0.018	0.018 - 0.041	0.025 - 0.046	0.030 - 0.051
	Low-Carbon Steel	85 - 180	0.010 - 0.018	0.018 - 0.041	0.025 - 0.046	0.030 - 0.051
	1010, 1020, 1025, 1522, 1144, etc.	180 - 275	0.010 - 0.018	0.018 - 0.041	0.025 - 0.046	0.030 - 0.051
	Medium-Carbon Steel	125 - 180	0.010 - 0.018	0.018 - 0.041	0.025 - 0.046	0.030 - 0.051
	1030, 1040, 1050, 1527, 1140, 1151, etc.	180 - 325	0.010 - 0.018	0.012 - 0.018	0.012 - 0.025	0.020 - 0.036
	Alloy Steel	125 - 180	0.010 - 0.018	0.018 - 0.041	0.025 - 0.046	0.030 - 0.051
	4140, 5140, 8640, etc.	180 - 375	0.010 - 0.018	0.012 - 0.018	0.012 - 0.025	0.020 - 0.036
	High-Strength Alloy 4340, 4330V, 300M, etc.	240 - 450	0.010 - 0.018	0.012 - 0.018	0.012 - 0.025	0.020 - 0.036
	Structural Steel	125 - 180	0.010 - 0.018	0.018 - 0.041	0.025 - 0.046	0.030 - 0.051
	A36, A285, A516, etc.	180 - 350	0.010 - 0.018	0.012 - 0.018	0.012 - 0.025	0.020 - 0.036
	Tool Steel	150 - 200	0.010 - 0.018	0.018 - 0.041	0.025 - 0.046	0.030 - 0.051
	H-13, H-21, A-4, 0-2, S-3, etc.	200 - 250	0.010 - 0.018	0.012 - 0.018	0.012 - 0.025	0.020 - 0.036
S	**High-Temp Alloy** Hastelloy B, Inconel 600, etc.	140 - 310	0.010 - 0.018	0.012 - 0.018	0.012 - 0.025	0.020 - 0.036
	Titanium Alloy	140 - 310	0.010 - 0.018	0.012 - 0.018	0.012 - 0.025	0.020 - 0.036
M	**Stainless Steel 400 Series** 416, 420, etc.	135 - 350	0.010 - 0.018	0.018 - 0.041	0.025 - 0.046	0.030 - 0.051
	Stainless Steel 300 Series 304, 316, 17-4PH, etc.	135 - 275	0.010 - 0.018	0.018 - 0.041	0.025 - 0.046	0.030 - 0.051
K	**Grey Cast Iron, Ductile Iron,**	< 200	0.010 - 0.018	0.012 - 0.018	0.012 - 0.025	0.020 - 0.036
	Spheroidal Cast Iron (Pearlitic)	> 200	0.010 - 0.018	0.012 - 0.018	0.012 - 0.025	0.020 - 0.036
	Spheroidal Cast Iron (Ferritic)	260 - 320	0.010 - 0.018	0.012 - 0.018	0.012 - 0.025	0.020 - 0.036
N	**Copper and Alloys** **Brass**	< 500	0.010 - 0.018	0.018 - 0.041	0.025 - 0.046	0.030 - 0.051
	Bronze **Bronze Phosphorous**	< 180	0.010 - 0.018	0.018 - 0.041	0.025 - 0.046	0.030 - 0.051
	Aluminum and Alloys	< 150	0.010 - 0.018	0.018 - 0.041	0.025 - 0.046	0.030 - 0.051

*Stock value is on diameter.

IMPORTANT: The speeds and feeds listed on these pages are a general starting point for all applications. Factory technical assistance is also available for specific applications through our Application Engineering department. *ext:* **7611** | *email:* **appeng@alliedmachine.com**

SECTION E

Threading

Threading Solutions

Solid Carbide and Indexable Thread Mills | AccuThread® 856 | ThreadMills USA™

Any Thread, Any Time

Allied Machine's thread milling product line has developed into a comprehensive range of high-precision tooling that offers outstanding productivity with exceptional levels of tool life and thread accuracy. The thread mill range covers both solid carbide and indexable replaceable insert tools with an extensive range of thread forms.

Our thread milling product line has been specifically designed to provide customers with a wide range of options. This is achieved by offering two thread mill ranges within our product lineup: the low cost, general production ThreadMills USA range and the high performance, high productivity AccuThread range.

Online programmer available 24/7.	Solid carbide and indexable insert styles.	Large range of thread form options.

Applicable Industries

Aerospace | Agriculture | Automotive | Firearms | General Machining | Medical

Oil & Gas | Renewable Energy | Tool, Mold & Die

Your safety and the safety of others is very important. This catalog contains important safety messages. Always read and follow all safety precautions.

This triangle is a safety hazard symbol. It alerts you to potential safety hazards that can cause tool failure and serious injury.

When you see this symbol in the catalog, look for a related safety message that may be near this triangle or referred to in the nearby text.

There are safety signal words also used in the catalog. Safety messages follow these words.

WARNING

WARNING (shown above) means that failure to follow the precautions in this message could result in tool failure and serious injury.

NOTICE means that failure to follow the precautions in this message could result in damage to the tool or machine but not result in personal injury.

NOTE and **IMPORTANT** are also used. These are important that you read and follow but are not safety-related.

Visit www.alliedmachine.com for the most up-to-date information and procedures.

Reference Icons
The following icons will appear throughout the catalog to help you navigate between products.

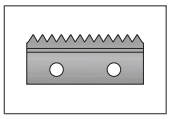

Bolt-in Style Inserts
Refers to the available bolt-in style thread mill insert options

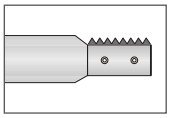

Bolt-in Style Insert Holders
Refers to the range of holder options available for bolt-in style inserts

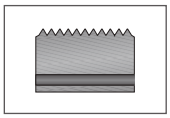

Pin Style Inserts
Refers to the available pin style thread mill insert options.

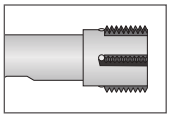

Pin Style Insert Holders
Refers to the range of holder options available for pin style inserts

Setup / Assembly Information
Detailed instructions and information regarding the corresponding part(s)

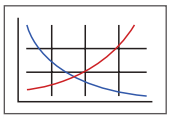

Recommended Cutting Data
Speed and feed recommendations for optimum and safe threading

Coolant-Through Option
Indicates that the product is coolant through

Threading Solutions Contents

Introduction Information

Thread Mills Overview and Online Tools . . . . . 2 - 3

Solid Carbide Thread Mills

Product Overview 4
Port and Thread Finishing Kits 5
Product Nomenclature . . . . . 6 - 7
BSW Thread Form . . . . . 8 - 9
BSPT Thread Form 10
BSPP Thread Form 11
NPT Thread Form . . . . . 12 - 13
NPTF Thread Form . . . . . 14 - 15
NPS Thread Form 16
NPSF Thread Form 17
UN Thread Form . . . . . 18 - 25
ISO Thread Form . . . . . 26 - 29
UN Thread Form (AccuThread T3®) . . . . . 30 - 32
ISO Thread Form (AccuThread T3®) . . . . . 33 - 34

Indexable Thread Mills

Product Overview 36
Product Nomenclature 37
Bolt-in Style:
NPT / NPTF Thread Forms 38
BSPT / BSPP Thread Forms 39
UN Thread Form 40
UNJ Thread Form 41
ISO Thread Form 42
Holders 43
Pin Style:
NPT / NPTF / BSPT Thread Forms 44
BSPP / API-ROUND / ACME Thread Forms 45
UN Thread Form . . . . . 46 - 47
UNJ Thread Form 48
ISO Thread Form 49
Holders . . . . . 50 - 51

Recommended Cutting Data

Pre-Drill Information, Formulas and Recommended Pass Chart . . . . . 52 - 53
Solid Carbide: AccuThread® 856 . . . . . 54 - 55
Solid Carbide: ThreadMills USA™ . . . . . 56 - 57
Solid Carbide: AccuThread® T3 . . . . . 58 - 59
Indexable: AccuThread® 856 . . . . . 60 - 63
Programming Guide . . . . . 64 - 65
AccuThread® T3 Technical Guide 66
Troubleshooting Guide . . . . . 68 - 69

High Performance Threading Solutions

THREAD MILLING DONE *RIGHT*

Solid Carbide Thread Mills		Notes
AccuThread® 856		• Allied Machine's proprietary AM210® coating yields a 25-50% increase in tool life over competitor products. • Standard cutting lengths allow for multiple applications without the need for special thread mills. • Helical flute offers increased strength and rigidity when cutting forces are applied.
ThreadMills USA™		• Helical flute offers increased strength and rigidity when cutting forces are applied. • High quality for consistent, predictable production. • Coolant-through options available. • TiAlN coating improves tool life versus uncoated tools.
AccuThread® T3		• Allied Machine's proprietary AM210® coating yields a 25-50% increase in tool life over competitor products. • Standard cutting lengths allow for multiple applications without the need for special thread mills. • Helical flute offers increased strength and rigidity when cutting forces are applied.

Indexable Insert Thread Mills		Notes
AccuThread® 856 Bolt-in Style		• Thread mill holders are manufactured from stainless steel that is engineered to dampen vibration during operation. • Extensive range of thread forms with two thread lengths. • Can produce left- or right-handed threads.
AccuThread® 856 Pin Style		• Patented pin style locking system ensures unsurpassed repeatability. • Thread mill holders are manufactured from stainless steel that is engineered to dampen vibration during operation. • Extensive range of thread forms with two thread lengths.
AccuThread® 856 Indexable Inserts	Bolt-in Style Pin Style	• Full profiles present on all inserts allow 100% thread form against 65-75% for tapping. • Allied Machine's premium carbide allows for extended tool life while providing high-quality thread forms. • Allied Machine's proprietary AM210® coating yields a 25-50% increase in tool life over competitor products.

Online Tools

Insta-Code®

Find your thread mill. Create your program.

The all new software lets you choose the best thread mill product for your application and create the program code for your machine. Insta-Code is available as a PC download app (that can be used offline) and an online web app available 24/7 at www.alliedmachine.com/InstaCode.

Eliminate the wait. Get your program now.

Insta-Code also has a **Cycle Time Calculator**

Online Version

- Generates thread mill G-code programs.
- Available online 24/7.
- No login required.
- No updates needed.
- Easily share the program code.
- Supported on all web browsers

Download Version

- Creates program code for multiple machine platforms.
- Suggests a thread mill based on application details.
- Provides estimated cycle time for improved production.
- Available for use offline.

Offline Version Updates

- Update your offline Insta-Code software.
- Download the updated .zip file, then transfer to the offline computer. Click "check for update" in your Insta-Code software and navigate to the downloaded zip file.
- This allows you to keep all your saved programs.

1. Download and open **Allied_Machine_Insta-Code.zip**
2. Click on **setup.exe** to install the program
3. **One click updates** are available for online computers

Supported on all Windows OS

www.alliedmachine.com/InstaCode

Solid Carbide Styles and Thread Forms

Straight BSW	Helical BSPP, NPS, NPSF, UN, ISO	Taper Helical BSPT, NPT, NPTF	Helical (3-Tooth Style) UN, ISO
 AccuThread® 856	 AccuThread® 856	 AccuThread® 856	 AccuThread® T3
 ThreadMills USA™ (coolant and noncoolant)	 ThreadMills USA™ (coolant and noncoolant)	 ThreadMills USA™ (coolant and noncoolant)	

AccuThread® T3

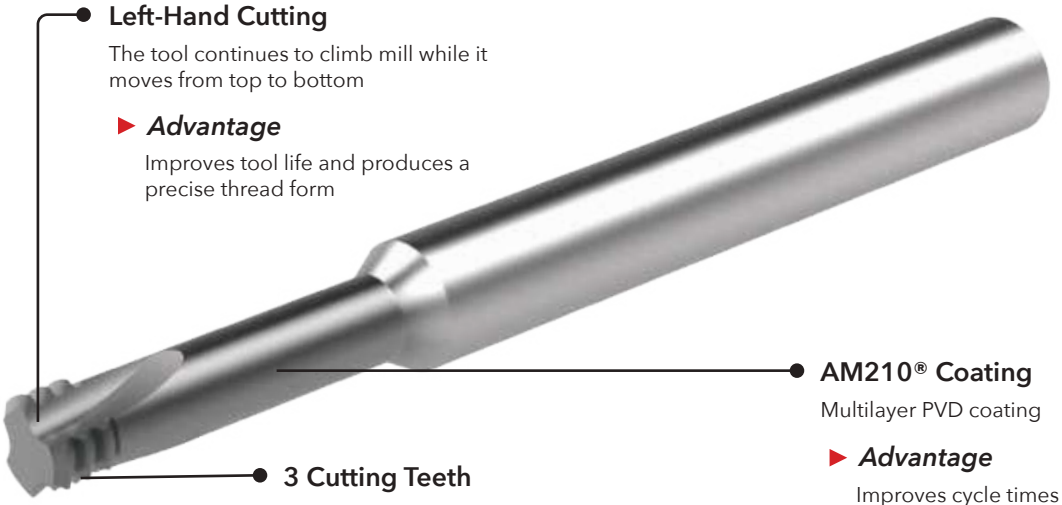

Left-Hand Cutting

The tool continues to climb mill while it moves from top to bottom

▶ ***Advantage***

Improves tool life and produces a precise thread form

AM210® Coating

Multilayer PVD coating

▶ ***Advantage***

Improves cycle times and tool life

3 Cutting Teeth

The tool cuts minimal threads at once and reduces side deflection

▶ ***Advantage***

Cuts harder materials and produces deeper threads than a standard thread mill

Additional Information

- Available in UN and ISO thread forms.
- Available in imperial and metric shanks.
- Available in 2xD and 3xD lengths.

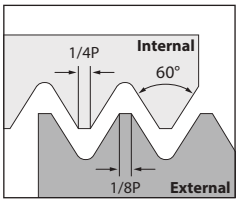

UN Thread Form

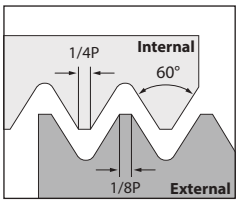

ISO Thread Form

Port and Thread Finishing Kits

WE HAVE A KIT FOR THAT

Kits aren't for everyone, but if you work on different projects from day to day, you need to ***be prepared for the work tomorrow will bring.***

The Complete Package

Producing fully finished threaded hydraulic ports has never been easier. The Port and Thread Finishing Kit includes the AccuPort 432® port contour cutter with a dedicated AccuThread® 856 solid carbide thread mill in a single kit. You also receive the T-A® inserts and port form inserts needed to complete the assembly.

Port kits incorporate the AccuThread 856 solid carbide thread mills to increase the manufacturing flexibility by allowing hydraulic ports to be produced in just two operations. In addition, where a unique port profile is required, Allied Machine provides a dedicated special tooling solution using our extensive tool design and manufacturing experience to meet precise specifications.

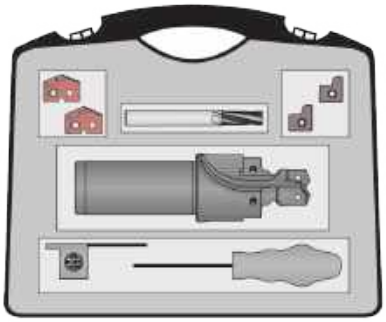

NOTE: See Section A92 of our product catalog for the complete list of Port and Thread Finishing Kits.

One Tool, FOUR Operations

4 IN 1

NOTE: See Section A92 of our product catalog for full AccuPort 432 product line information.

Product Nomenclature

AccuThread® 856 Solid Carbide Thread Mills

TM	U	K	0250	–	20	M
1	2	3	4		5	6

1. Thread Mill	2. Thread Class	3. Coating	4. Min Thread Diameter	5. Thread Pitch	6. Shank
TM = Standard **HDTM** = Heavy duty **TW** = Weldon flat	**U** = UN **N** = NPT, NPTF **B** = BSPP, BSPT, BSW **M** = ISO **A** = AccuPort® specific	**K** = AM210® **U** = Uncoated	**0250** = 1/4 (English) **0008** = #8 (Number Drill) **0450** = M4.5 (ISO)	**20** = UN 20 TPI **075** = ISO 0.75 **NPT** = All pipe threads will show thread form	**Blank** = Imperial **M** = Metric

ThreadMills USA™ Solid Carbide Thread Mills

TM	250	20	CH	M
1	2	3	4	5

1. Thread Mill	2. Min Thread Diameter	3. Thread Pitch	4. Optional	5. Shank
TM = TiAlN **TMFT** = Uncoated **HDTM** = Heavy duty **HDTMFT** = Heavy duty uncoated	**250** = 1/4 (English) **08** = #8 (Number Drill) **45** = M4.5 (ISO)	**20** = UN 20 TPI **075** = ISO 0.75 **NPT** = All pipe threads will show thread form	**CH** = Coolant hole **DE** = Double end **NPT** = All pipe threads will show thread form	**Blank** = Imperial **M** = Metric

Reference Key

Symbol	Attribute
D_1	Maximum cutter diameter
D_2	Shank diameter
L_1	Overall length
L_6	Length of cut

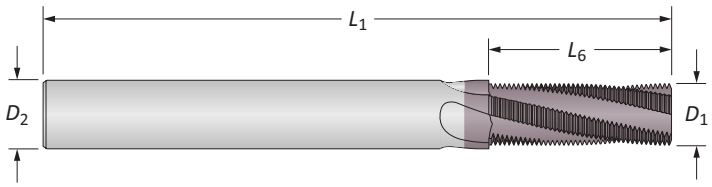

Product Nomenclature

AccuThread® T3 Solid Carbide Thread Mills

TM	073	64	M	–	3T	2X
1	2	3	4		5	6

1. Thread Mill	2. Min Thread Diameter	3. Pitch	4. Shank	5. Style	6. Depth to Diameter Ratio
TM = Standard	**250** = 1/4 (English) **45** = M4.5 (Metric)	**20** = UN 20 TPI **075** = ISO 0.75	**Blank** = Imperial **M** = Metric	**3T** = 3 tooth	**2X** = 2xD **3X** = 3xD

Reference Key

Symbol	Attribute
D_1	Maximum cutter diameter
D_2	Shank diameter
D_3	Undercut diameter
L_1	Overall length
L_6	Length of cut

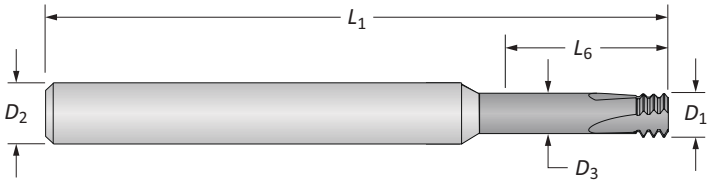

A DRILLING
B BORING
C REAMING
D BURNISHING
E THREADING
X SPECIALS

Solid Carbide Thread Mills

BSW | Noncoolant

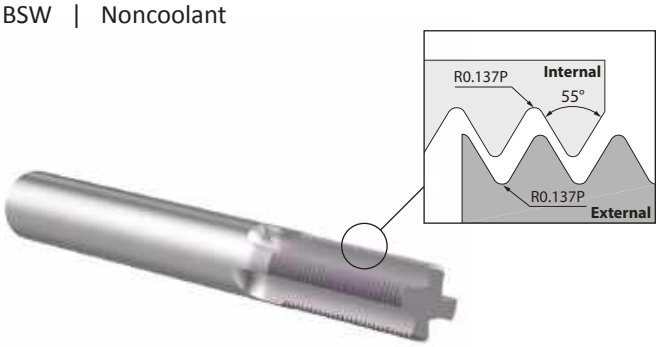

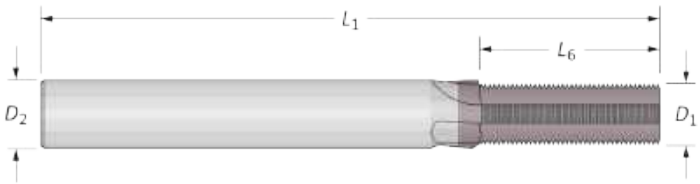

BSW | Noncoolant

	TPI (Pitch)	Min Thread Ø	Flutes	Thread Mill D_1	D_2	L_6	L_1	Part No. ThreadMills USA™	AccuThread® 856
i	20	1/4	3	0.177	0.250	0.400	2.500	**TM20BSW**	–
	18	5/16	3	0.197	0.250	0.445	2.500	**TM18BSW**	–
	16	3/8	5	0.276	0.312	0.563	3.000	**TM16BSW**	–
	14	7/16	5	0.311	0.312	0.715	3.000	**TM14BSW**	–
	12	1/2	5	0.354	0.375	0.750	3.500	**TM12BSW**	–
	11	5/8	5	0.468	0.500	0.910	3.500	**TM11BSW**	–
	10	3/4	5	0.468	0.500	1.100	3.500	**TM10BSW**	–
	9	7/8	6	0.620	0.625	1.112	4.000	**TM9BSW**	–
	8	1	6	0.620	0.625	1.375	4.000	**TM8BSW**	–
m	20	1/4	3	4.50	6.00	10.16	58.00	**TM20BSWM**	**TMBK0250-20M**
	18	5/16	3	5.00	6.00	11.29	58.00	**TM18BSWM**	**TMBK0312-18M**
	16	3/8	5	7.00	8.00	14.29	64.00	**TM16BSWM**	**TMBK0375-16M**
	14	7/16	5	7.90	8.00	18.15	64.00	**TM14BSWM**	**TMBK0437-14M**
	12	1/2	5	9.00	10.00	19.10	73.00	**TM12BSWM**	**TMBK0500-12M**
	11	5/8	5	11.90	12.00	23.10	84.00	**TM11BSWM**	**TMBK0625-11M**
	10	3/4	5	11.90	12.00	27.94	84.00	**TM10BSWM**	**TMBK0750-10M**
	9	7/8	6	15.90	16.00	28.23	93.00	**TM9BSWM**	**TMBK0875-9M**
	8	1	6	15.90	16.00	34.94	93.00	**TM8BSWM**	**TMBK1000-8M**

E: 52 - 55
Key on E: 1

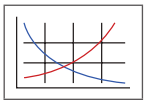

E: 4

Weldon Flat

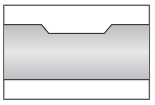

To order a thread mill with a Weldon flat, replace the leading TM designator with TW (available for inch shanks 3/8 and above or metric shanks 6 mm and above)
Example: Cylindrical shank = **TM**NK0500-NPT | Weldon shank flat = **TW**NK0500-NPT
NOTE: Weldon flats have a minimum order quantity of 2 pieces.

i = Imperial (in)
m = Metric (mm)

Solid Carbide Thread Mills

BSW | Coolant Through

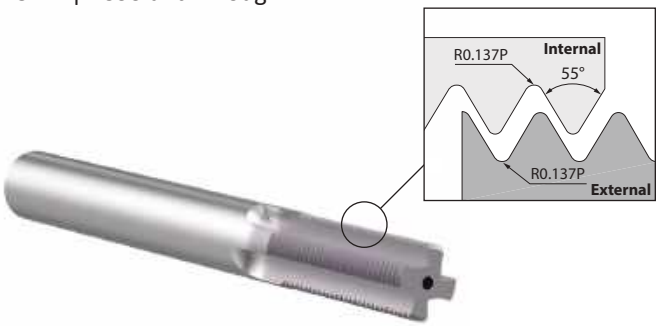

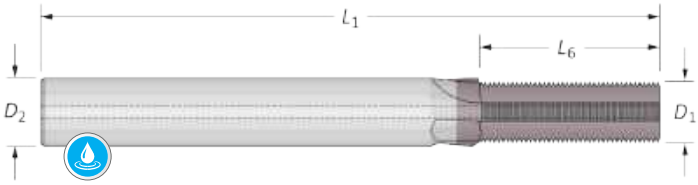

BSW | Coolant Through

	TPI (Pitch)	Min Thread Ø	Flutes	Thread Mill D_1	D_2	L_6	L_1	Part No. ThreadMills USA™
i	20	1/4	3	0.177	0.250	0.400	2.375	**TM20BSWCH**
	18	5/16	3	0.197	0.250	0.445	2.375	**TM18BSWCH**
	16	3/8	5	0.276	0.312	0.563	3.000	**TM16BSWCH**
	14	7/16	5	0.311	0.312	0.715	3.000	**TM14BSWCH**
	12	1/2	5	0.354	0.375	0.750	3.000	**TM12BSWCH**
	11	5/8	5	0.468	0.500	0.910	3.500	**TM11BSWCH**
	10	3/4	5	0.468	0.500	1.100	3.500	**TM10BSWCH**
	9	7/8	6	0.620	0.625	1.112	4.000	**TM9BSWCH**
	8	1	6	0.620	0.625	1.375	4.000	**TM8BSWCH**
m	20	1/4	3	4.50	6.00	10.16	58.00	**TM20BSWCHM**
	18	5/16	3	5.00	6.00	11.29	58.00	**TM18BSWCHM**
	16	3/8	5	7.00	8.00	14.29	64.00	**TM16BSWCHM**
	14	7/16	5	7.90	8.00	18.15	64.00	**TM14BSWCHM**
	12	1/2	5	9.00	10.00	19.10	84.00	**TM12BSWCHM**
	11	5/8	5	11.90	12.00	23.10	84.00	**TM11BSWCHM**
	10	3/4	5	11.90	12.00	27.94	84.00	**TM10BSWCHM**
	9	7/8	6	15.90	16.00	28.23	93.00	**TM9BSWCHM**
	8	1	6	15.90	16.00	34.94	93.00	**TM8BSWCHM**

E: 52 - 55
Key on E: 1

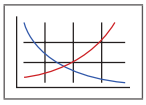

E: 4

Weldon Flat

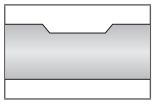

To order a thread mill with a Weldon flat, replace the leading TM designator with TW (available for inch shanks 3/8 and above or metric shanks 6 mm and above)
Example: Cylindrical shank = **TM**NK0500-NPT | Weldon shank flat = **TW**NK0500-NPT
NOTE: Weldon flats have a minimum order quantity of 2 pieces.

i = Imperial (in)
m = Metric (mm)

A DRILLING
B BORING
C REAMING
D BURNISHING
E THREADING
X SPECIALS

Solid Carbide Thread Mills

BSPT

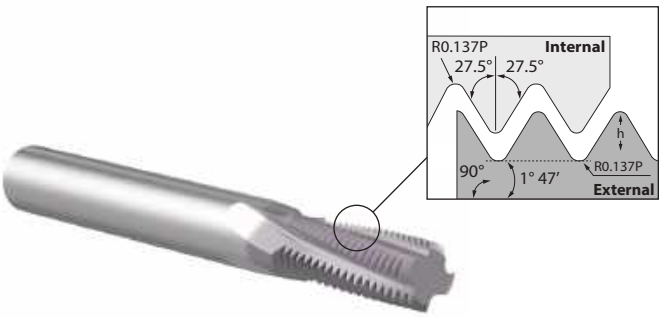

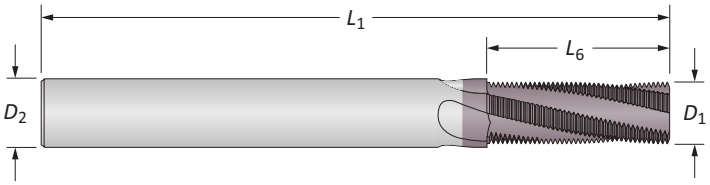

BSPT | Noncoolant

	TPI (Pitch)	Min Thread Ø	Flutes	Thread Mill D_1	D_2	L_6	L_1	Part No. ThreadMills USA™	AccuThread® 856
i	28	1/16 and 1/8	3	0.240	0.250	0.393	2.500	TM28BSPT	–
	19	1/4 and 3/8	4	0.310	0.312	0.580	3.000	TM19BSPT	–
	14	1/2 and 3/4	4	0.470	0.500	0.787	3.500	TM14BSPT	–
	11	1	4	0.620	0.625	1.546	4.000	TM11BSPT	–
m	28	1/16 and 1/8	3	5.97	6.00	9.98	58.00	TM28BSPTM	TMBK0063-BSPTM
	19	1/4 and 3/8	4	9.91	10.00	14.73	73.00	TM19BSPTM	TMBK0250-BSPTM
	14	1/2 and 3/4	4	11.94	12.00	20.00	84.00	TM14BSPTM	TMBK0500-BSPTM
	11	1	4	15.75	16.00	32.31	93.00	TM11BSPTM	TMBK1000-BSPTM

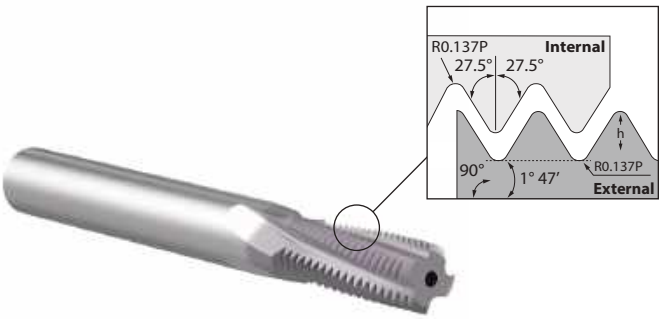

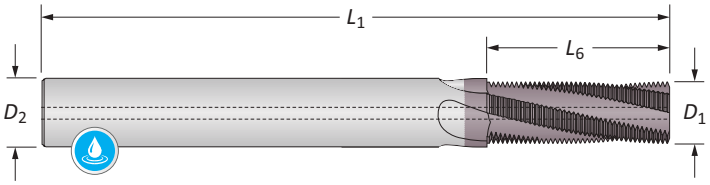

BSPT | Coolant Through

	TPI (Pitch)	Min Thread Ø	Flutes	Thread Mill D_1	D_2	L_6	L_1	Part No. ThreadMills USA™
i	28	1/16 and 1/8	3	0.240	0.250	0.393	2.375	TM28BSPTCH
	19	1/4 and 3/8	4	0.310	0.312	0.580	3.000	TM19BSPTCH
	14	1/2 and 3/4	4	0.470	0.500	0.787	3.500	TM14BSPTCH
	11	1	4	0.620	0.625	1.546	4.000	TM11BSPTCH
m	28	1/16 and 1/8	3	5.97	6.00	9.98	58.00	TM28BSPTCHM
	19	1/4 and 3/8	4	9.91	10.00	14.73	84.00	TM19BSPTCHM
	14	1/2 and 3/4	4	11.94	12.00	20.00	84.00	TM14BSPTCHM
	11	1	4	15.75	16.00	32.31	93.00	TM11BSPTCHM

E: 52 - 55
Key on E: 1

E: 4

Weldon Flat

To order a thread mill with a Weldon flat, replace the leading TM designator with TW (available for inch shanks 3/8 and above or metric shanks 6 mm and above)
Example: Cylindrical shank = TMNK0500-NPT | Weldon shank flat = TWNK0500-NPT
NOTE: Weldon flats have a minimum order quantity of 2 pieces.

i = Imperial (in)
m = Metric (mm)

Solid Carbide Thread Mills

BSPP

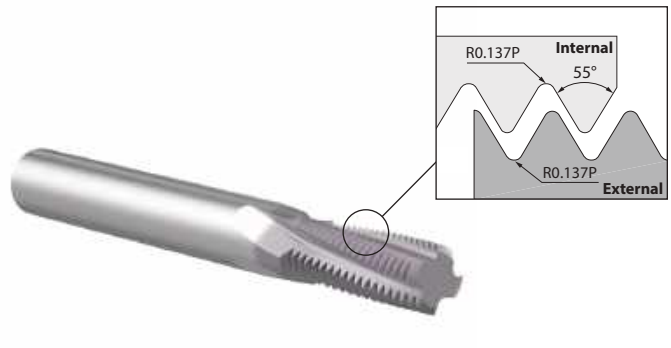

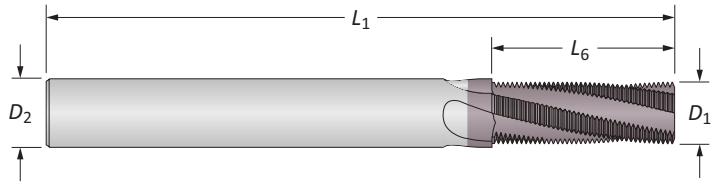

BSPP | Noncoolant

	TPI (Pitch)	Min Thread Ø	Flutes	Thread Mill D_1	D_2	L_6	L_1	Part No. ThreadMills USA™	AccuThread® 856
i	28	1/16 and 1/8	3	0.240	0.250	0.572	2.500	**TM28BSPP**	–
	19	1/4 and 3/8	4	0.310	0.312	0.737	3.000	**TM19BSPP**	–
	14	1/2 and 3/4	4	0.470	0.500	1.143	3.500	**TM14BSPP**	–
	11	1	4	0.620	0.625	1.365	4.000	**TM11BSPP**	–
m	28	1/16 and 1/8	3	5.97	6.00	14.53	58.00	**TM28BSPPM**	**TMBK0063-BSPPM**
	19	1/4 and 3/8	4	9.91	10.00	18.72	73.00	**TM19BSPPM**	**TMBK0250-BSPPM**
	19	3/8	4	11.94	12.00	28.41	84.00	**HDTM19BSPPM**	–
	14	1/2 and 3/4	4	11.94	12.00	29.03	84.00	**TM14BSPPM**	**TMBK0500-BSPPM**
	14	3/4	5	15.75	16.00	34.47	93.00	**HDTM14BSPPM**	–
	11	1	4	15.75	16.00	34.67	93.00	**TM11BSPPM**	**TMBK1000-BSPPM**

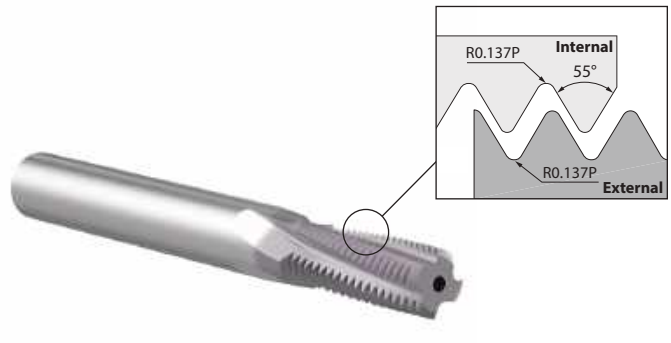

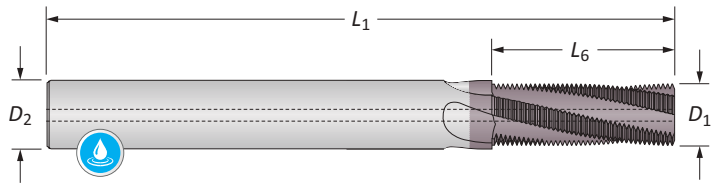

BSPP | Coolant Through

	TPI (Pitch)	Min Thread Ø	Flutes	Thread Mill D_1	D_2	L_6	L_1	Part No. ThreadMills USA™
i	28	1/16 and 1/8	3	0.240	0.250	0.572	2.375	**TM28BSPPCH**
	19	1/4 and 3/8	4	0.310	0.312	0.737	3.000	**TM19BSPPCH**
	14	1/2 and 3/4	4	0.470	0.500	1.143	3.500	**TM14BSPPCH**
	11	1	4	0.620	0.625	1.365	4.000	**TM11BSPPCH**
m	28	1/16 and 1/8	3	5.97	6.00	14.53	58.00	**TM28BSPPCHM**
	19	1/4 and 3/8	4	9.91	10.00	18.72	84.00	**TM19BSPPCHM**
	14	1/2 and 3/4	4	11.94	12.00	29.03	84.00	**TM14BSPPCHM**
	11	1	4	15.75	16.00	34.67	93.00	**TM11BSPPCHM**

E: 52 - 55
Key on E: 1

E: 4

Weldon Flat

To order a thread mill with a Weldon flat, replace the leading TM designator with TW (available for inch shanks 3/8 and above or metric shanks 6 mm and above)
Example: Cylindrical shank = TMNK0500-NPT | Weldon shank flat = TWNK0500-NPT
NOTE: Weldon flats have a minimum order quantity of 2 pieces.

i = Imperial (in)
m = Metric (mm)

Solid Carbide Thread Mills

NPT | Noncoolant

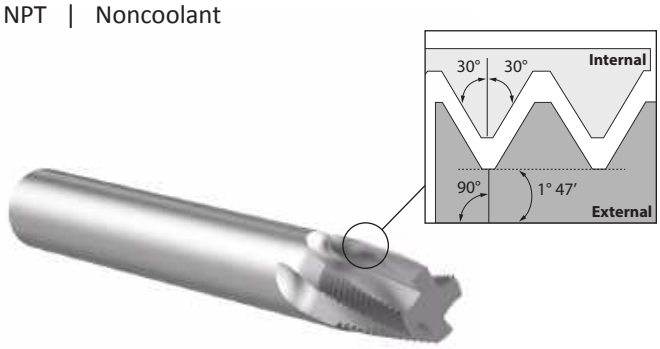

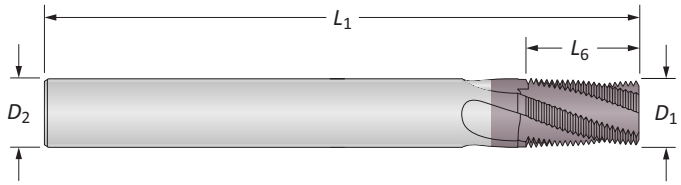

NPT | Noncoolant

	TPI (Pitch)	Min Thread Ø	Flutes	Thread Mill D_1	D_2	L_6	L_1	Part No. ThreadMills USA™	AccuThread® 856
	27	1/16 and 1/8	3	0.245	0.250	0.437	2.500	**TM27NPT**	**TMNK0063-NPT**
	27	1/8	4	0.300	0.312	0.482	3.000	**HDTM27NPT**	**HDTMNK0125-NPT**
	18	1/4 and 3/8	4	0.305	0.312	0.625	3.000	**TM18NPT**	**TMNK0250-NPT**
	18	1/4 and 3/8	4	0.363	0.375	0.680	3.500	**HDTM18NPT**	**HDTMNK0250-NPT**
i	14	1/2 and 3/4	4	0.495	0.500	0.875	3.500	**TM14NPT**	**TMNK0500-NPT**
	14	3/4	4	0.620	0.625	1.000	4.000	**HDTM14NPT**	**HDTMNK0750-NPT**
	11.5	1	4	0.620	0.625	1.125	4.000	**TM11NPT**	**TMNK1000-NPT**
	11.5	1	5	0.745	0.750	1.219	4.000	**HDTM11NPT**	**HDTMNK1000-NPT**
	8	2-1/2	4	0.745	0.750	1.500	5.000	**TM8NPT**	**TMNK2500-NPT**
	27	1/16 and 1/8	3	5.95	6.00	11.30	58.00	**TM27NPTM**	**TMNK0063-NPTM**
	27	1/8	4	7.62	8.00	12.25	64.00	**HDTM27NPTM**	**–**
	18	1/4 and 3/8	4	7.75	8.00	15.70	64.00	**TM18NPTM**	**TMNK0250-NPTM**
	18	1/4 and 3/8	4	9.22	10.00	17.25	84.00	**HDTM18NPTM**	**–**
m	14	1/2 and 3/4	4	11.95	12.00	23.70	84.00	**TM14NPTM**	**TMNK0500-NPTM**
	14	3/4	4	15.75	16.00	25.40	93.00	**HDTM14NPTM**	**–**
	11.5	1	4	15.75	16.00	28.75	93.00	**TM11NPTM**	**TMNK1000-NPTM**
	11.5	1	5	18.92	20.00	30.95	105.00	**HDTM11NPTM**	**–**
	8	2-1/2	5	19.75	20.00	38.10	115.00	**TM8NPTM**	**TMNK2500-NPTM**

E: 52 - 55
Key on E: 1

E: 4

Weldon Flat

To order a thread mill with a Weldon flat, replace the leading TM designator with TW (available for inch shanks 3/8 and above or metric shanks 6 mm and above)
Example: Cylindrical shank = **TM**NK0500-NPT | Weldon shank flat = **TW**NK0500-NPT
NOTE: Weldon flats have a minimum order quantity of 2 pieces.

i = Imperial (in)
m = Metric (mm)

Solid Carbide Thread Mills

NPT | Coolant Through

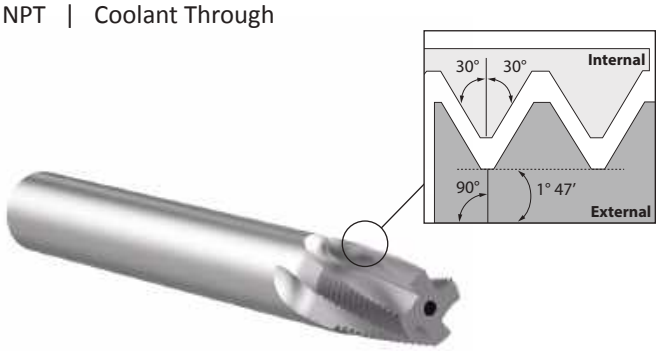

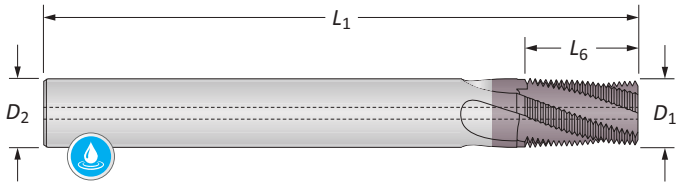

NPT | Coolant Through

	TPI (Pitch)	Min Thread Ø	Flutes	Thread Mill D_1	D_2	L_6	L_1	Part No. ThreadMills USA™
i	27	1/16 and 1/8	3	0.245	0.250	0.437	2.375	**TM27NPTCH**
	27	1/8	4	0.300	0.312	0.482	3.000	**HDTM27NPTCH**
	18	1/4 and 3/8	4	0.305	0.312	0.625	3.000	**TM18NPTCH**
	18	1/4 and 3/8	4	0.363	0.375	0.680	3.000	**HDTM18NPTCH**
	14	1/2 and 3/4	4	0.495	0.500	0.875	3.500	**TM14NPTCH**
	14	3/4	4	0.620	0.625	1.000	4.000	**HDTM14NPTCH**
	11.5	1	4	0.620	0.625	1.125	4.000	**TM11NPTCH**
	11.5	1	5	0.745	0.750	1.219	4.000	**HDTM11NPTCH**
	8	2-1/2	4	0.745	0.750	1.500	5.000	**TM8NPTCH**
m	27	1/16 and 1/8	3	5.95	6.00	11.30	58.00	**TM27NPTCHM**
	27	1/8	4	7.62	8.00	12.25	64.00	**HDTM27NPTCHM**
	18	1/4 and 3/8	4	7.75	8.00	15.70	64.00	**TM18NPTCHM**
	18	1/4 and 3/8	4	9.22	10.00	17.25	84.00	**HDTM18NPTCHM**
	14	1/2 and 3/4	4	11.95	12.00	23.70	84.00	**TM14NPTCHM**
	14	3/4	4	15.75	16.00	25.40	93.00	**HDTM14NPTCHM**
	11.5	1	4	15.75	16.00	28.75	93.00	**TM11NPTCHM**
	11.5	1	5	18.92	20.00	30.95	105.00	**HDTM11NPTCHM**
	8	2-1/2	5	19.75	20.00	38.10	115.00	**TM8NPTCHM**

E: 52 - 55
Key on E: 1

E: 4

Weldon Flat

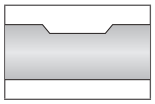

To order a thread mill with a Weldon flat, replace the leading TM designator with TW (available for inch shanks 3/8 and above or metric shanks 6 mm and above)
Example: Cylindrical shank = **TM**NK0500-NPT | Weldon shank flat = **TW**NK0500-NPT
NOTE: Weldon flats have a minimum order quantity of 2 pieces.

i = Imperial (in)
m = Metric (mm)

Solid Carbide Thread Mills

NPTF | Noncoolant

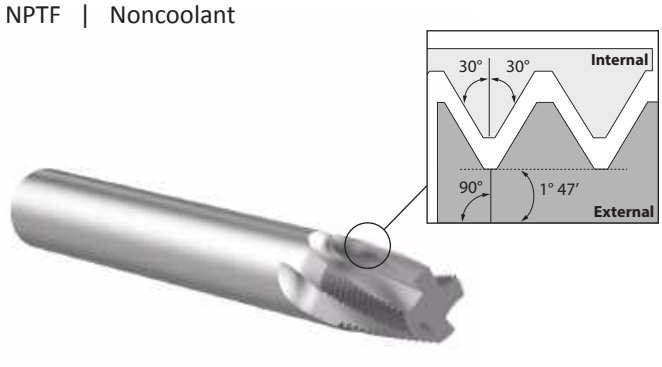

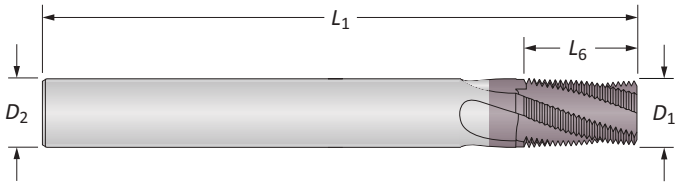

NPTF | Noncoolant

	TPI (Pitch)	Min Thread Ø	Flutes	Thread Mill D_1	D_2	L_6	L_1	Part No. ThreadMills USA™	AccuThread® 856
i	27	1/16 and 1/8	3	0.245	0.250	0.437	2.500	**TM27NPTF**	**TMNK0063-NPTF**
	18	1/4 and 3/8	4	0.305	0.312	0.625	3.000	**TM18NPTF**	**TMNK0250-NPTF**
	14	1/2 and 3/4	4	0.495	0.500	0.875	3.500	**TM14NPTF**	**TMNK0500-NPTF**
	11.5	1	4	0.620	0.625	1.125	4.000	**TM11NPTF**	**TMNK1000-NPTF**
	8	2-1/2	4	0.745	0.750	1.500	5.000	**TM8NPTF**	**TMNK2500-NPTF**
m	27	1/16 and 1/8	3	5.95	6.00	11.30	58.00	**TM27NPTFM**	**TMNK0063-NPTFM**
	18	1/4 and 3/8	4	7.75	8.00	15.70	64.00	**TM18NPTFM**	**TMNK0250-NPTFM**
	14	1/2 and 3/4	4	11.95	12.00	23.70	84.00	**TM14NPTFM**	**TMNK0500-NPTFM**
	11.5	1	4	15.75	16.00	28.75	93.00	**TM11NPTFM**	**TMNK1000-NPTFM**
	8	2-1/2	5	19.75	20.00	38.10	115.00	**TM8NPTFM**	**TMNK2500-NPTFM**

E: 52 - 55
Key on E: 1

E: 4

Weldon Flat

To order a thread mill with a Weldon flat, replace the leading TM designator with TW (available for inch shanks 3/8 and above or metric shanks 6 mm and above)
Example: Cylindrical shank = **TM**NK0500-NPT | Weldon shank flat = **TW**NK0500-NPT
NOTE: Weldon flats have a minimum order quantity of 2 pieces.

i = Imperial (in)
m = Metric (mm)

Solid Carbide Thread Mills

NPTF | Coolant Through

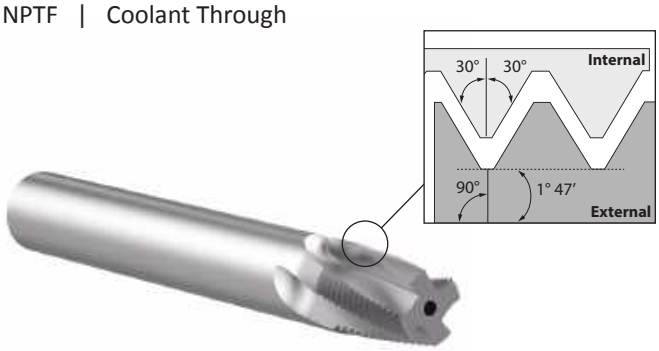

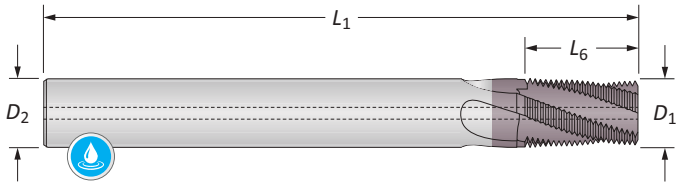

NPTF | Coolant Through

	TPI (Pitch)	Min Thread Ø	Flutes	Thread Mill D_1	D_2	L_6	L_1	Part No. ThreadMills USA™
i	27	1/16 and 1/8	3	0.245	0.250	0.437	2.375	**TM27NPTFCH**
	18	1/4 and 3/8	4	0.305	0.312	0.625	3.000	**TM18NPTFCH**
	14	1/2 and 3/4	4	0.495	0.500	0.875	3.500	**TM14NPTFCH**
	11.5	1	4	0.620	0.625	1.125	4.000	**TM11NPTFCH**
	8	2-1/2	4	0.745	0.750	1.500	5.000	**TM8NPTFCH**
m	27	1/16 and 1/8	3	5.95	6.00	11.30	58.00	**TM27NPTFCHM**
	18	1/4 and 3/8	4	7.75	8.00	15.70	64.00	**TM18NPTFCHM**
	14	1/2 and 3/4	4	11.95	12.00	23.70	84.00	**TM14NPTFCHM**
	11.5	1	4	15.75	16.00	28.75	93.00	**TM11NPTFCHM**
	8	2-1/2	5	19.75	20.00	38.10	115.00	**TM8NPTFCHM**

E: 52 - 55
Key on E: 1

E: 4

Weldon Flat

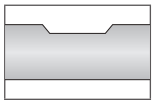

To order a thread mill with a Weldon flat, replace the leading TM designator with TW (available for inch shanks 3/8 and above or metric shanks 6 mm and above)
Example: Cylindrical shank = **TM**NK0500-NPT | Weldon shank flat = **TW**NK0500-NPT
NOTE: Weldon flats have a minimum order quantity of 2 pieces.

i = Imperial (in)
m = Metric (mm)

A DRILLING
B BORING
C REAMING
D BURNISHING
E THREADING
X SPECIALS

Solid Carbide Thread Mills

NPS

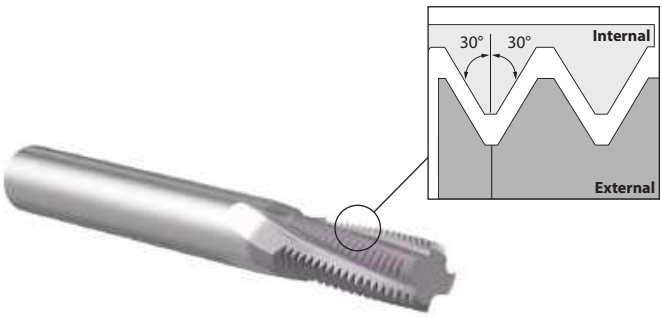

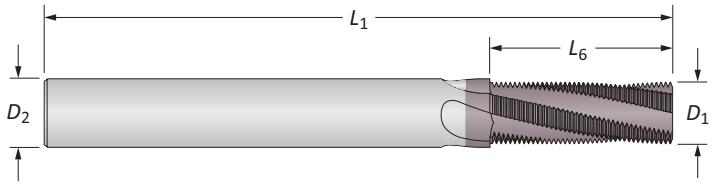

NPS | Noncoolant

	TPI (Pitch)	Min Thread Ø	Flutes	Thread Mill D_1	D_2	L_6	L_1	Part No. ThreadMills USA™
i	27	1/8	3	0.245	0.250	0.630	2.500	**TM27NPS**
	18	1/4 and 3/8	4	0.370	0.375	0.889	3.500	**TM18NPS**
	14	1/2 and 3/4	4	0.490	0.500	1.288	3.500	**TM14NPS**
	11.5	1	4	0.620	0.625	1.392	4.000	**TM11NPS**
m	27	1/8	3	5.95	6.00	16.00	58.00	**TM27NPSM**
	18	1/4 and 3/8	4	9.40	10.00	22.60	84.00	**TM18NPSM**
	14	1/2 and 3/4	4	11.94	12.00	32.70	84.00	**TM14NPSM**
	11.5	1	4	15.75	16.00	35.35	93.00	**TM11NPSM**

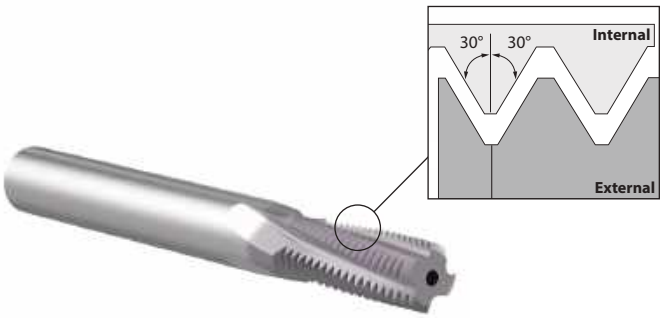

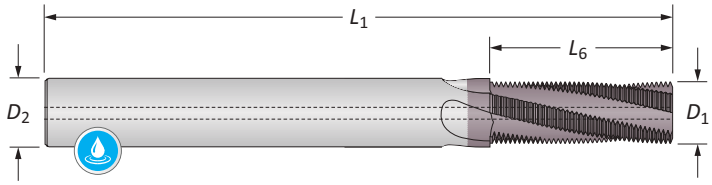

NPS | Coolant Through

	TPI (Pitch)	Min Thread Ø	Flutes	Thread Mill D_1	D_2	L_6	L_1	Part No. ThreadMills USA™
i	27	1/8	3	0.245	0.250	0.630	2.375	**TM27NPSCH**
	18	1/4 and 3/8	4	0.370	0.375	0.889	3.000	**TM18NPSCH**
	14	1/2 and 3/4	4	0.490	0.500	1.288	3.500	**TM14NPSCH**
	11.5	1	4	0.620	0.625	1.392	4.000	**TM11NPSCH**
m	27	1/8	3	5.95	6.00	16.00	58.00	**TM27NPSCHM**
	18	1/4 and 3/8	4	9.40	10.00	22.60	84.00	**TM18NPSCHM**
	14	1/2 and 3/4	4	11.94	12.00	32.70	84.00	**TM14NPSCHM**
	11.5	1	4	15.75	16.00	35.35	93.00	**TM11NPSCHM**

E: 52 - 55
Key on E: 1

E: 4

Weldon Flat

To order a thread mill with a Weldon flat, replace the leading TM designator with TW (available for inch shanks 3/8 and above or metric shanks 6 mm and above)
Example: Cylindrical shank = **TM**NK0500-NPT | Weldon shank flat = **TW**NK0500-NPT
NOTE: Weldon flats have a minimum order quantity of 2 pieces.

i = Imperial (in)
m = Metric (mm)

Solid Carbide Thread Mills

NPSF

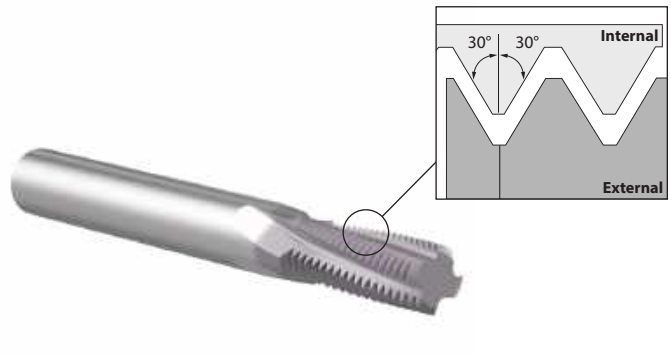

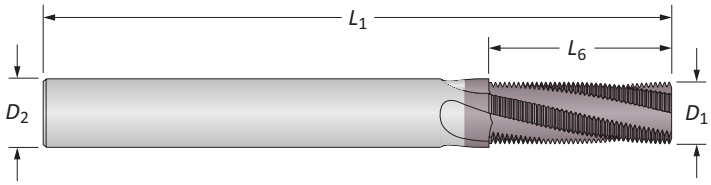

NPSF | Noncoolant

	TPI (Pitch)	Min Thread Ø	Flutes	Thread Mill D_1	D_2	L_6	L_1	Part No. ThreadMills USA™
i	27	1/8	3	0.245	0.250	0.630	2.500	**TM27NPSF**
	18	1/4 and 3/8	4	0.370	0.375	0.889	3.500	**TM18NPSF**
	14	1/2 and 3/4	4	0.490	0.500	1.288	3.500	**TM14NPSF**
	11.5	1	4	0.620	0.625	1.392	4.000	**TM11NPSF**
m	27	1/8	3	5.95	6.00	16.00	58.00	**TM27NPSFM**
	18	1/4 and 3/8	4	9.40	10.00	22.60	84.00	**TM18NPSFM**
	14	1/2 and 3/4	4	11.94	12.00	32.70	84.00	**TM14NPSFM**
	11.5	1	4	15.75	16.00	35.35	93.00	**TM11NPSFM**

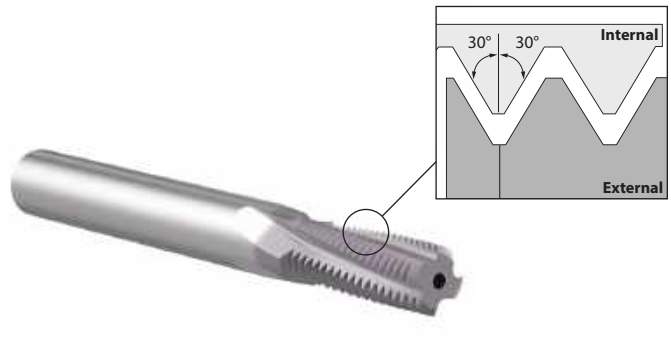

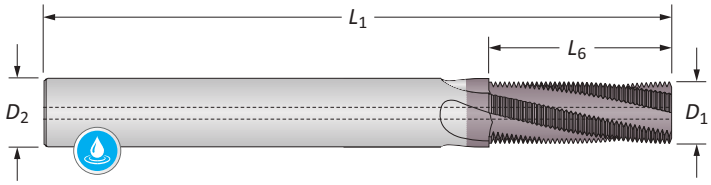

NPSF | Coolant Through

	TPI (Pitch)	Min Thread Ø	Flutes	Thread Mill D_1	D_2	L_6	L_1	Part No. ThreadMills USA™
i	27	1/8	3	0.245	0.250	0.630	2.375	**TM27NPSFCH**
	18	1/4 and 3/8	4	0.370	0.375	0.889	3.000	**TM18NPSFCH**
	14	1/2 and 3/4	4	0.490	0.500	1.288	3.500	**TM14NPSFCH**
	11.5	1	4	0.620	0.625	1.392	4.000	**TM11NPSFCH**
m	27	1/8	3	5.95	6.00	16.00	58.00	**TM27NPSFCHM**
	18	1/4 and 3/8	4	9.40	10.00	22.60	84.00	**TM18NPSFCHM**
	14	1/2 and 3/4	4	11.94	12.00	32.70	84.00	**TM14NPSFCHM**
	11.5	1	4	15.75	16.00	35.35	93.00	**TM11NPSFCHM**

E: 52 - 55
Key on E: 1

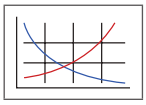

E: 4

Weldon Flat

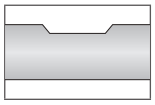

To order a thread mill with a Weldon flat, replace the leading TM designator with TW (available for inch shanks 3/8 and above or metric shanks 6 mm and above)
Example: Cylindrical shank = **TM**NK0500-NPT | Weldon shank flat = **TW**NK0500-NPT
NOTE: Weldon flats have a minimum order quantity of 2 pieces.

i = Imperial (in)
m = Metric (mm)

A DRILLING
B BORING
C REAMING
D BURNISHING
E THREADING
X SPECIALS

Solid Carbide Thread Mills

UN | Noncoolant

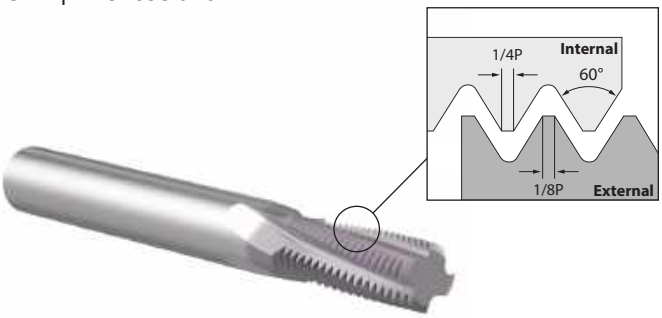

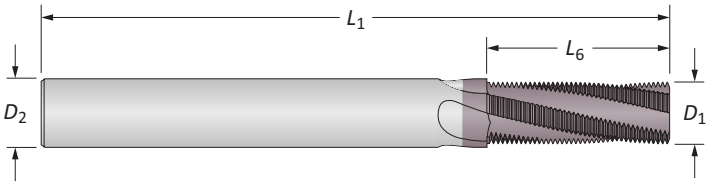

UN | Noncoolant

TPI (Pitch)	Min Thread Ø	Flutes	Thread Mill D_1	D_2	L_6	L_1	Part No. ThreadMills USA™	AccuThread® 856
64	#2	3*	0.065	0.125	0.125	2.000	**TM08664**	–
56	#2	3*	0.065	0.125	0.125	2.000	**TM08656**	**TMUK0002-56**
48	#3	3*	0.075	0.125	0.167	2.000	**TM09948**	–
44	#5	3	0.095	0.125	0.228	2.000	**TM12544**	–
40	#4	3*	0.085	0.125	0.175	2.000	**TM12540**	**TMUK0004-40**
36	#8	3	0.115	0.125	0.250	2.000	**TM16436**	–
32	#6	3	0.100	0.125	0.218	2.000	**TM13832**	**TMUK0006-32**
32	#8	3	0.115	0.125	0.250	2.000	**TM16432**	**TMUK0008-32**
32	#10	3	0.120	0.125	0.312	2.000	**TM19032**	**TMUK0010-32**
32	#10	3	0.150	0.187	0.312	2.500	**HDTM19032**	–
32	1/2	6	0.370	0.375	1.000	3.500	**TM50032**	–
28	#10	3	0.120	0.125	0.312	2.000	**TM19028**	**TMUK0010-28**
28	1/4	3	0.180	0.187	0.500	2.500	**TM25028**	**TMUK0250-28**
28	1/2	6	0.370	0.375	1.000	3.500	**TM50028**	–
24	#10	3	0.120	0.125	0.312	2.000	**TM19024**	**TMUK0010-24**
24	#10	3	0.145	0.187	0.312	2.500	**HDTM19024**	–
24	5/16	3	0.235	0.250	0.625	2.500	**TM31224**	**TMUK0313-24**
24	3/8	4	0.285	0.312	0.750	3.000	**TM37524**	**TMUK0375-24**
24	1/2	6	0.370	0.375	1.000	3.500	**TM50024**	–
20	1/4	3	0.180	0.187	0.500	2.500	**TM25020**	**TMUK0250-20**
20	1/4	3	0.195	0.250	0.500	2.500	**HDTM25020**	–
20	7/16	4	0.335	0.375	0.875	3.500	**TM43720**	**TMUK0438-20**
20	1/2	6	0.370	0.375	1.000	3.500	**TM50020**	–

*Straight fluted.

E: 52 - 55
Key on E: 1

E: 4

Weldon Flat

To order a thread mill with a Weldon flat, replace the leading TM designator with TW (available for inch shanks 3/8 and above or metric shanks 6 mm and above)
Example: Cylindrical shank = **TM**NK0500-NPT | Weldon shank flat = **TW**NK0500-NPT
NOTE: Weldon flats have a minimum order quantity of 2 pieces.

i = Imperial (in)
m = Metric (mm)

Solid Carbide Thread Mills

UN | Noncoolant (continued)

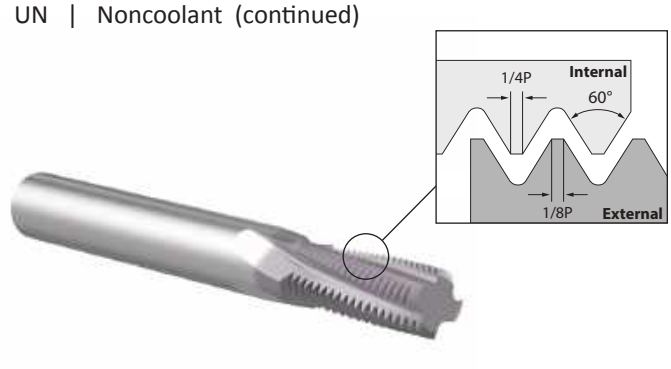

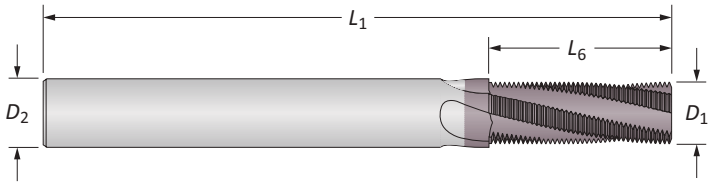

UN | Noncoolant

	TPI (Pitch)	Min Thread Ø	Flutes	Thread Mill D_1	D_2	L_6	L_1	Part No. ThreadMills USA™	AccuThread® 856
	18	5/16	3	0.235	0.250	0.625	2.500	**TM31218**	**TMUK0313-18**
	18	5/16	3	0.245	0.312	0.625	3.000	**HDTM31218**	**–**
	18	9/16	4	0.370	0.375	0.875	3.500	**TM56218**	**TMUK0563-18**
	16	3/8	4	0.285	0.312	0.750	3.000	**TM37516**	**TMUK0375-16**
	16	3/8	4	0.300	0.375	0.750	3.500	**HDTM37516**	**–**
	16	3/4	4	0.490	0.500	1.250	3.500	**TM75016**	**TMUK0750-16**
	14	7/16	4	0.305	0.312	0.750	3.000	**TM43714**	**TMUK0438-14**
	14	7/8	4	0.490	0.500	1.250	3.500	**TM87514**	**TMUK0875-14**
	13	1/2	4	0.350	0.375	0.875	3.500	**TM50013**	**TMUK0500-13**
	13	1/2	4	0.400	0.500	0.875	3.500	**HDTM50013**	**–**
	12	9/16	4	0.370	0.375	0.875	3.500	**TM56212**	**TMUK0563-12**
i	12	3/4	4	0.495	0.500	1.250	3.500	**TM75012**	**TMUK0750-12**
	12	1	6	0.745	0.750	1.500	4.000	**TM10012**	**–**
	11	5/8	4	0.470	0.500	1.250	3.500	**TM62511**	**TMUK0625-11**
	11	5/8	4	0.470	0.500	1.455	3.500	**TM62511-XL**	**TMUK0625-11XL**
	10	3/4	4	0.495	0.500	1.250	3.500	**TM75010**	**TMUK0750-10**
	10	3/4	4	0.495	0.500	1.600	4.000	**TM75010-XL**	**TMUK0750-10XL**
	9	7/8	4	0.620	0.625	1.375	4.000	**TM87509**	**TMUK0875-9**
	9	7/8	4	0.620	0.625	1.778	4.000	**TM87509-XL**	**TMUK0875-9XL**
	8	1	4	0.620	0.625	1.375	4.000	**TM10008**	**TMUK1000-8**
	8	1	6	0.745	0.750	2.000	4.500	**TM10008-XL**	**TMUK1000-8XL**
	7	1-1/8	5	0.745	0.750	1.572	4.500	**TM12507**	**–**
	6	1-3/8	5	0.745	0.750	1.500	4.500	**TM13706**	**–**

E: 52 - 55
Key on E: 1

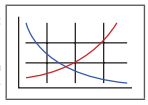

E: 4

Weldon Flat

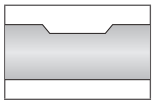

To order a thread mill with a Weldon flat, replace the leading TM designator with TW (available for inch shanks 3/8 and above or metric shanks 6 mm and above)
Example: Cylindrical shank = **TM**NK0500-NPT | Weldon shank flat = **TW**NK0500-NPT
NOTE: Weldon flats have a minimum order quantity of 2 pieces.

i = Imperial (in)
m = Metric (mm)

A DRILLING
B BORING
C REAMING
D BURNISHING
E THREADING
X SPECIALS

Solid Carbide Thread Mills

UN | Noncoolant

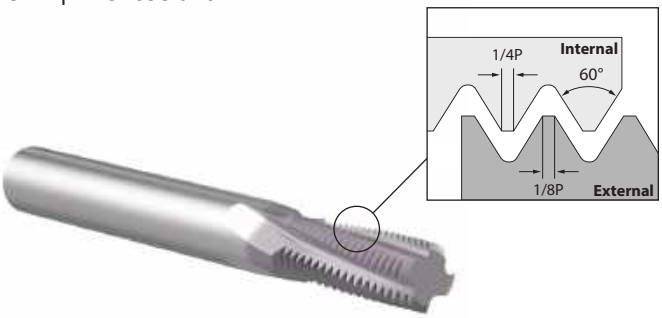

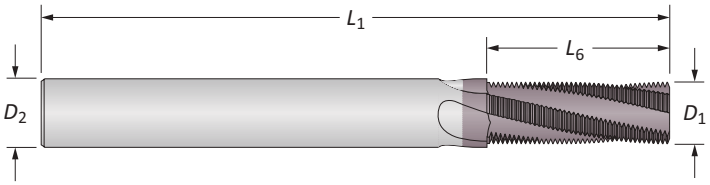

UN | Noncoolant

	TPI (Pitch)	Min Thread Ø	Flutes	Thread Mill D_1	D_2	L_6	L_1	Part No. ThreadMills USA™	AccuThread® 856
	64	#2	3*	1.65	3.00	3.20	39.00	TM08664M	TMUK0002-64M
	56	#2	3*	1.65	3.00	3.20	39.00	TM08656M	TMUK0002-56M
	48	#3	3*	1.80	3.00	3.75	39.00	TM09948M	TMUK0003-48M
	44	#5	3	2.40	3.00	4.65	39.00	TM12544M	TMUK0005-44M
	40	#4	3*	2.20	3.00	4.45	39.00	TM12540M	TMUK0004-40M
	36	#8	3	3.00	4.00	6.35	51.00	TM16436M	TMUK0008-36M
	32	#6	3	2.50	3.00	5.55	39.00	TM13832M	TMUK0006-32M
	32	#8	3	3.20	4.00	6.35	51.00	TM16432M	TMUK0008-32M
	32	#10	3	3.80	4.00	7.95	51.00	TM19032M	TMUK0010-32M
	32	#10	3	3.80	4.00	7.95	51.00	HDTM19032M	–
	32	1/2	6	9.40	10.00	25.40	84.00	TM50032M	–
m	28	#10	3	3.80	4.00	8.20	51.00	TM19028M	TMUK0010-28M
	28	1/4	3	4.75	6.00	12.70	58.00	TM25028M	TMUK0250-28M
	28	7/16	4	7.90	8.00	19.95	64.00	–	TMUK0438-28M
	28	1/2	6	9.40	10.00	25.40	84.00	TM50028M	–
	24	#10	3	3.70	4.00	8.50	51.00	TM19024M	TMUK0010-24M
	24	#10	3	3.70	4.00	8.50	51.00	HDTM19024M	–
	24	5/16	3	5.95	6.00	16.00	58.00	TM31224M	TMUK0313-24M
	24	3/8	4	7.25	8.00	19.00	64.00	TM37524M	TMUK0375-24M
	24	1/2	6	9.40	10.00	25.40	84.00	TM50024M	–
	20	1/4	3	4.75	6.00	12.70	58.00	TM25020M	TMUK0250-20M
	20	1/4	3	4.95	6.00	12.70	58.00	HDTM25020M	–
	20	7/16	4	8.75	10.00	22.85	73.00	TM43720M	TMUK0438-20M
	20	1/2	6	9.40	10.00	25.40	84.00	TM50020M	–

*Straight fluted.

E: 52 - 55
Key on E: 1

E: 4

Weldon Flat

To order a thread mill with a Weldon flat, replace the leading TM designator with TW (available for inch shanks 3/8 and above or metric shanks 6 mm and above)
Example: Cylindrical shank = **TM**NK0500-NPT | Weldon shank flat = **TW**NK0500-NPT
NOTE: Weldon flats have a minimum order quantity of 2 pieces.

i = Imperial (in)
m = Metric (mm)

Solid Carbide Thread Mills

UN | Noncoolant (continued)

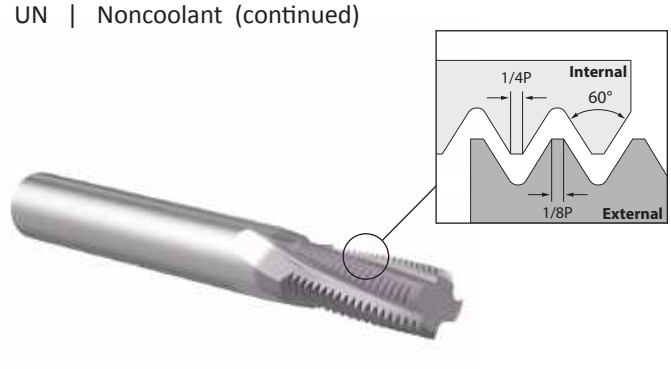

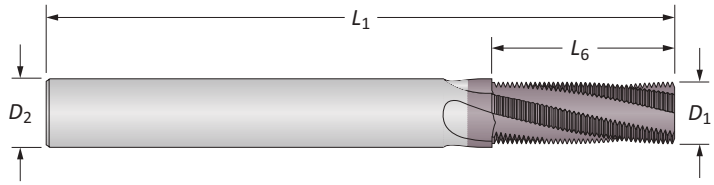

UN | Noncoolant

	TPI (Pitch)	Min Thread Ø	Flutes	Thread Mill D_1	D_2	L_6	L_1	Part No. ThreadMills USA™	AccuThread® 856
	18	5/16	3	5.95	6.00	17.00	58.00	**TM31218M**	**TMUK0313-18M**
	18	5/16	3	6.22	8.00	15.87	64.00	**HDTM31218M**	–
	18	9/16	4	9.90	10.00	22.65	73.00	**TM56218M**	**TMUK0563-18M**
	16	3/8	4	7.25	8.00	19.05	64.00	**TM37516M**	**TMUK0375-16M**
	16	3/8	4	7.62	10.00	19.05	84.00	**HDTM37516M**	–
	16	3/4	4	11.95	12.00	31.75	84.00	**TM75016M**	**TMUK0750-16M**
	14	7/16	4	7.75	8.00	20.00	64.00	**TM43714M**	**TMUK0438-14M**
	14	7/8	4	11.95	12.00	32.70	84.00	**TM87514M**	**TMUK0875-14M**
	13	1/2	4	9.40	10.00	23.50	73.00	**TM50013M**	**TMUK0500-13M**
	13	1/2	4	10.16	12.00	23.50	84.00	**HDTM50013M**	–
	12	9/16	4	9.90	10.00	23.35	73.00	**TM56212M**	**TMUK0563-12M**
ⓜ	12	3/4	4	11.95	12.00	31.75	84.00	**TM75012M**	**TMUK0750-12M**
	12	1	6	18.92	20.00	38.10	105.00	**TM10012M**	–
	11	5/8	4	11.95	12.00	32.40	84.00	**TM62511M**	**TMUK0625-11M**
	11	5/8	4	11.95	12.00	37.00	100.00	**TM62511M-XL**	**TMUK0625-11XLM**
	10	3/4	4	11.95	12.00	33.00	84.00	**TM75010M**	**TMUK0750-10M**
	10	3/4	4	11.95	12.00	40.70	100.00	**TM75010M-XL**	**TMUK0750-10XLM**
	9	7/8	4	15.75	16.00	36.75	93.00	**TM87509M**	**TMUK0875-9M**
	9	7/8	4	15.75	16.00	45.20	100.00	**TM87509M-XL**	**TMUK0875-9XLM**
	8	1	4	15.75	16.00	35.00	93.00	**TM10008M**	**TMUK1000-8M**
	8	1	6	19.90	20.00	50.80	115.00	**TM10008M-XL**	**TMUK1000-8XLM**
	7	1-1/8	5	19.90	20.00	36.30	105.00	**TM12507M**	**TMUK1125-7M**
	6	1-3/8	5	19.90	20.00	38.10	105.00	**TM13706M**	**TMUK1375-6M**

E: 52 - 55
Key on E: 1

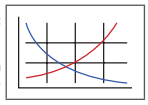

E: 4

Weldon Flat

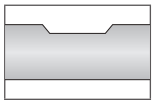

To order a thread mill with a Weldon flat, replace the leading TM designator with TW (available for inch shanks 3/8 and above or metric shanks 6 mm and above)
Example: Cylindrical shank = **TM**NK0500-NPT | Weldon shank flat = **TW**NK0500-NPT
NOTE: Weldon flats have a minimum order quantity of 2 pieces.

ⓘ = Imperial (in)
ⓜ = Metric (mm)

A DRILLING
B BORING
C REAMING
D BURNISHING
E THREADING
X SPECIALS

Solid Carbide Thread Mills

UN | Coolant Through

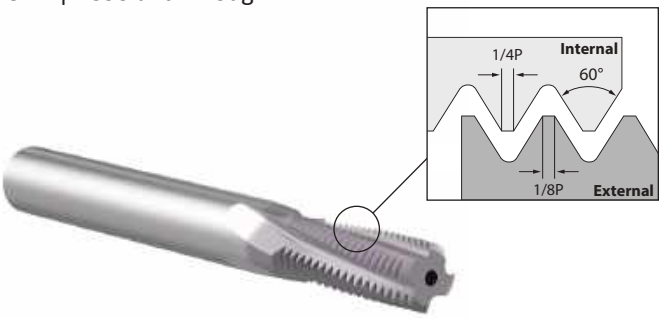

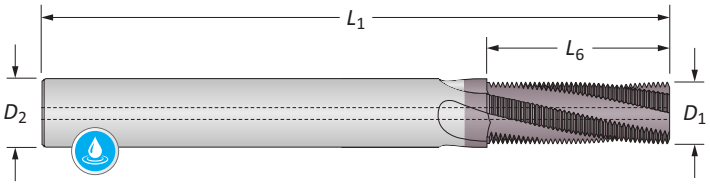

UN | Coolant Through

TPI (Pitch)	Min Thread Ø	Flutes	Thread Mill D_1	D_2	L_6	L_1	Part No. ThreadMills USA™
64	#2	3*	0.065	0.125	0.125	1.500	**TM08664CH**
56	#2	3*	0.065	0.125	0.125	1.500	**TM08656CH**
48	#3	3*	0.075	0.125	0.167	1.500	**TM09948CH**
44	#5	3	0.095	0.125	0.228	1.500	**TM12544CH**
40	#4	3*	0.085	0.125	0.175	1.500	**TM12540CH**
36	#8	3	0.115	0.125	0.250	1.500	**TM16436CH**
32	#6	3	0.100	0.125	0.218	1.500	**TM13832CH**
32	#8	3	0.115	0.125	0.250	1.500	**TM16432CH**
32	#10	3	0.150	0.187	0.312	2.375	**TM19032CH**
32	#10	3	0.150	0.187	0.312	2.375	**HDTM19032CH**
32	1/2	6	0.370	0.375	1.000	3.500	**TM50032CH**
28	#10	3	0.120	0.125	0.312	1.500	**TM19028CH**
28	1/4	3	0.180	0.187	0.500	2.375	**TM25028CH**
28	1/2	6	0.370	0.375	1.000	3.500	**TM50028CH**
24	#10	3	0.145	0.187	0.312	2.375	**TM19024CH**
24	#10	3	0.145	0.187	0.312	2.375	**HDTM19024CH**
24	5/16	3	0.235	0.250	0.625	2.375	**TM31224CH**
24	3/8	4	0.285	0.312	0.750	3.000	**TM37524CH**
24	1/2	6	0.370	0.375	1.000	3.500	**TM50024CH**
20	1/4	3	0.180	0.187	0.500	2.375	**TM25020CH**
20	1/4	3	0.195	0.250	0.500	2.375	**HDTM25020CH**
20	7/16	4	0.335	0.375	0.875	3.000	**TM43720CH**
20	1/2	6	0.370	0.375	1.000	3.500	**TM50020CH**

*Straight fluted.

E: 52 - 55 | E: 4 | **Weldon Flat**

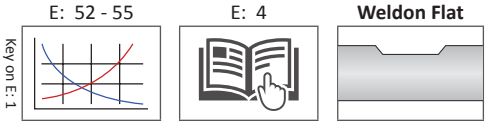

To order a thread mill with a Weldon flat, replace the leading TM designator with TW (available for inch shanks 3/8 and above or metric shanks 6 mm and above)
Example: Cylindrical shank = **TM**NK0500-NPT | Weldon shank flat = **TW**NK0500-NPT
NOTE: Weldon flats have a minimum order quantity of 2 pieces.

ⓘ = Imperial (in)
ⓜ = Metric (mm)

Solid Carbide Thread Mills

UN | Coolant Through (continued)

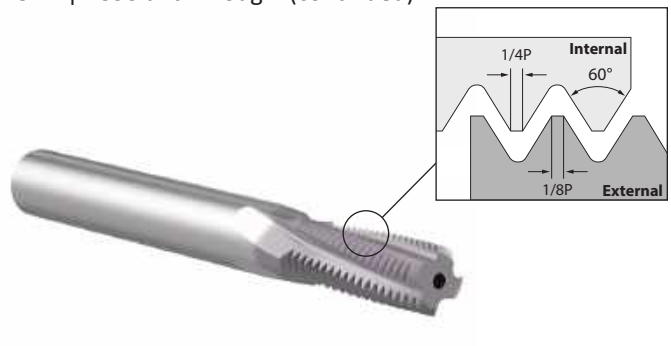

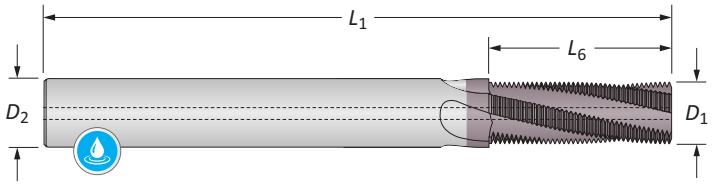

UN | Coolant Through

	TPI (Pitch)	Min Thread Ø	Flutes	Thread Mill D_1	D_2	L_6	L_1	Part No. ThreadMills USA™
	18	5/16	3	0.235	0.250	0.625	2.375	**TM31218CH**
	18	5/16	3	0.245	0.312	0.625	3.000	**HDTM31218CH**
	18	9/16	4	0.370	0.375	0.875	3.000	**TM56218CH**
	16	3/8	4	0.285	0.312	0.750	3.000	**TM37516CH**
	16	3/8	4	0.300	0.375	0.750	3.000	**HDTM37516CH**
	16	3/4	4	0.490	0.500	1.250	3.500	**TM75016CH**
	14	7/16	4	0.305	0.312	0.750	3.000	**TM43714CH**
	14	7/8	4	0.490	0.500	1.250	3.500	**TM87514CH**
	13	1/2	4	0.350	0.375	0.875	3.000	**TM50013CH**
	13	1/2	4	0.400	0.500	0.875	3.500	**HDTM50013CH**
	12	9/16	4	0.370	0.375	0.875	3.500	**TM56212CH**
i	12	3/4	4	0.495	0.500	1.250	3.500	**TM75012CH**
	12	1	6	0.745	0.750	1.500	4.000	**TM10012CH**
	11	5/8	4	0.470	0.500	1.250	3.500	**TM62511CH**
	11	5/8	4	0.470	0.500	1.455	3.500	**TM62511CH-XL**
	10	3/4	4	0.495	0.500	1.250	3.500	**TM75010CH**
	10	3/4	4	0.495	0.500	1.600	4.000	**TM75010CH-XL**
	9	7/8	4	0.620	0.625	1.375	4.000	**TM87509CH**
	9	7/8	4	0.620	0.625	1.778	4.000	**TM87509CH-XL**
	8	1	4	0.620	0.625	1.375	4.000	**TM10008CH**
	8	1	6	0.745	0.750	2.000	4.500	**TM10008CH-XL**
	7	1-1/8	5	0.745	0.750	1.572	4.500	**TM12507CH**
	6	1-3/8	5	0.745	0.750	1.500	4.500	**TM13706CH**

E: 52 - 55
Key on E: 1

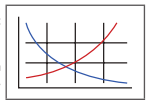

E: 4

Weldon Flat

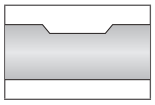

To order a thread mill with a Weldon flat, replace the leading TM designator with TW (available for inch shanks 3/8 and above or metric shanks 6 mm and above)
Example: Cylindrical shank = TMNK0500-NPT | Weldon shank flat = TWNK0500-NPT
NOTE: Weldon flats have a minimum order quantity of 2 pieces.

i = Imperial (in)
m = Metric (mm)

Solid Carbide Thread Mills

UN | Coolant Through

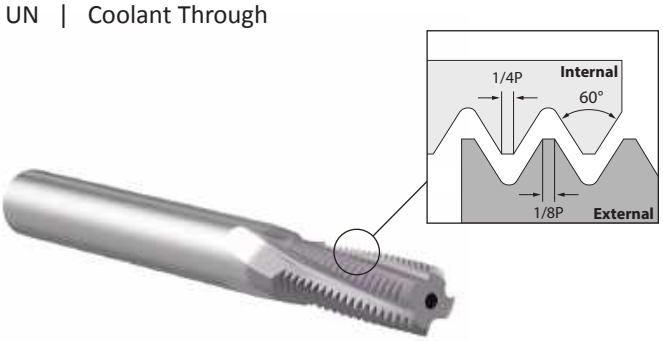

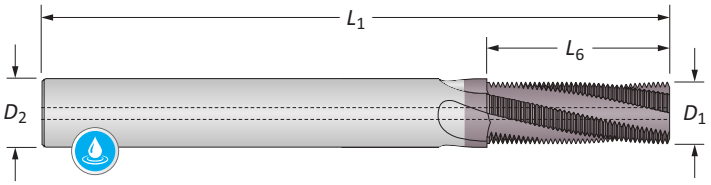

UN | Coolant Through

	TPI (Pitch)	Min Thread Ø	Flutes	Thread Mill D_1	D_2	L_6	L_1	Part No. ThreadMills USA™
	64	#2	3*	1.65	3.00	3.20	39.00	**TM08664CHM**
	56	#2	3*	1.65	3.00	3.20	39.00	**TM08656CHM**
	48	#3	3*	1.80	3.00	3.75	39.00	**TM09948CHM**
	44	#5	3	2.40	3.00	4.65	39.00	**TM12544CHM**
	40	#4	3*	2.20	3.00	4.45	39.00	**TM12540CHM**
	36	#8	3	3.00	4.00	6.35	51.00	**TM16436CHM**
	32	#6	3	2.50	3.00	5.55	39.00	**TM13832CHM**
	32	#8	3	3.20	4.00	6.35	51.00	**TM16432CHM**
	32	#10	3	3.80	4.00	7.95	51.00	**TM19032CHM**
	32	#10	3	3.80	4.00	7.95	51.00	**HDTM19032CHM**
	32	1/2	6	9.40	10.00	25.40	84.00	**TM50032CHM**
m	28	#10	3	3.80	4.00	8.20	51.00	**TM19028CHM**
	28	1/4	3	4.75	6.00	12.70	58.00	**TM25028CHM**
	28	1/2	6	9.40	10.00	25.40	84.00	**TM50028CHM**
	24	#10	3	3.68	4.00	8.50	51.00	**TM19024CHM**
	24	#10	3	3.70	4.00	8.50	51.00	**HDTM19024CHM**
	24	5/16	3	5.95	6.00	16.00	58.00	**TM31224CHM**
	24	3/8	4	7.25	8.00	19.00	64.00	**TM37524CHM**
	24	1/2	6	9.40	10.00	25.40	84.00	**TM50024CHM**
	20	1/4	3	4.75	6.00	12.70	58.00	**TM25020CHM**
	20	1/4	3	4.95	6.00	12.70	58.00	**HDTM25020CHM**
	20	7/16	4	8.75	10.00	22.85	84.00	**TM43720CHM**
	20	1/2	6	9.40	10.00	25.40	84.00	**TM50020CHM**

*Straight fluted.

E: 52 - 55
Key on E: 1

E: 4

Weldon Flat

To order a thread mill with a Weldon flat, replace the leading TM designator with TW (available for inch shanks 3/8 and above or metric shanks 6 mm and above)
Example: Cylindrical shank = **TM**NK0500-NPT | Weldon shank flat = **TW**NK0500-NPT
NOTE: Weldon flats have a minimum order quantity of 2 pieces.

i = Imperial (in)
m = Metric (mm)

Solid Carbide Thread Mills

UN | Coolant Through (continued)

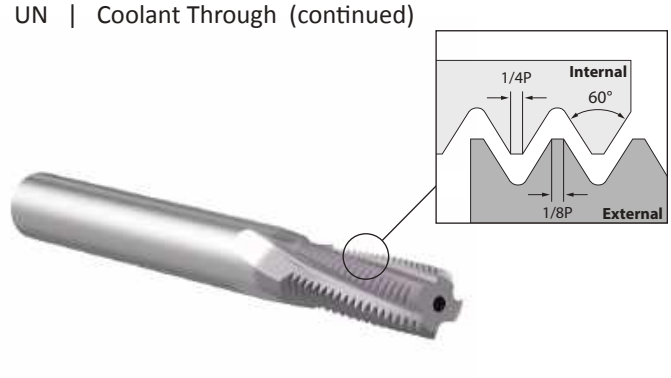

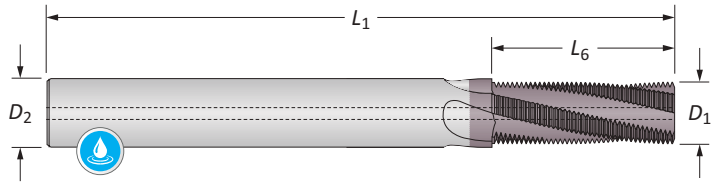

UN | Coolant Through

	TPI (Pitch)	Min Thread Ø	Flutes	Thread Mill D_1	D_2	L_6	L_1	Part No. ThreadMills USA™
	18	5/16	3	5.95	6.00	17.00	58.00	**TM31218CHM**
	18	5/16	3	6.22	8.00	15.87	64.00	**HDTM31218CHM**
	18	9/16	4	9.90	10.00	22.65	84.00	**TM56218CHM**
	16	3/8	4	7.25	8.00	19.05	64.00	**TM37516CHM**
	16	3/8	4	7.62	10.00	19.05	84.00	**HDTM37516CHM**
	16	3/4	4	11.95	12.00	31.75	84.00	**TM75016CHM**
	14	7/16	4	7.75	8.00	20.00	64.00	**TM43714CHM**
	14	7/8	4	11.95	12.00	32.70	84.00	**TM87514CHM**
	13	1/2	4	9.40	10.00	23.50	84.00	**TM50013CHM**
	13	1/2	4	10.16	12.00	23.50	84.00	**HDTM50013CHM**
	12	9/16	4	9.90	10.00	23.35	84.00	**TM56212CHM**
m	12	3/4	4	11.95	12.00	31.75	84.00	**TM75012CHM**
	12	1	6	18.92	20.00	38.10	105.00	**TM10012CHM**
	11	5/8	4	11.95	12.00	32.40	84.00	**TM62511CHM**
	11	5/8	4	11.95	12.00	37.00	100.00	**TM62511CHM-XL**
	10	3/4	4	11.95	12.00	33.00	84.00	**TM75010CHM**
	10	3/4	4	11.95	12.00	40.70	100.00	**TM75010CHM-XL**
	9	7/8	4	15.75	16.00	36.75	93.00	**TM87509CHM**
	9	7/8	4	15.75	16.00	45.20	100.00	**TM87509CHM-XL**
	8	1	4	15.75	16.00	35.00	93.00	**TM10008CHM**
	8	1	6	19.90	20.00	50.80	115.00	**TM10008CHM-XL**
	7	1-1/8	5	19.90	20.00	36.10	105.00	**TM12507CHM**
	6	1-3/8	5	19.90	20.00	38.10	105.00	**TM13706CHM**

E: 52 - 55
Key on E: 1

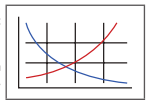

E: 4

Weldon Flat

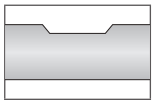

To order a thread mill with a Weldon flat, replace the leading TM designator with TW (available for inch shanks 3/8 and above or metric shanks 6 mm and above)
Example: Cylindrical shank = TMNK0500-NPT | Weldon shank flat = TWNK0500-NPT
NOTE: Weldon flats have a minimum order quantity of 2 pieces.

i = Imperial (in)
m = Metric (mm)

A DRILLING
B BORING
C REAMING
D BURNISHING
E THREADING
X SPECIALS

Solid Carbide Thread Mills

ISO | Noncoolant

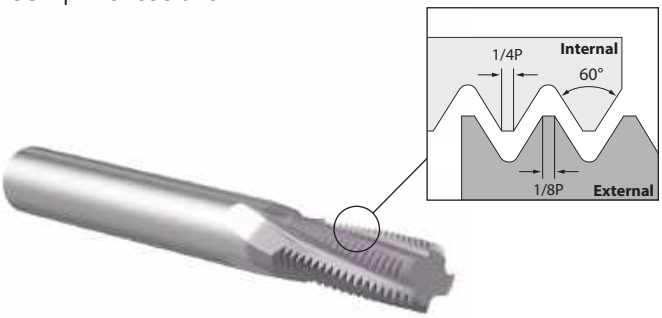

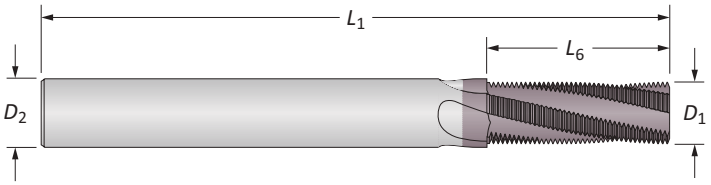

ISO | Noncoolant

Pitch	Min Thread Ø	Flutes	Thread Mill D_1	D_2	L_6	L_1	Part No. ThreadMills USA™	AccuThread® 856
0.40	M2	3*	0.059	0.125	0.126	2.000	**TM20040**	–
0.45	M2.5	3*	0.059	0.125	0.142	2.000	**TM25045**	–
0.50	M3	3*	0.085	0.125	0.178	2.000	**TM30050**	–
0.50	M6	3	0.181	0.187	0.473	2.500	**TM60050**	–
0.50	M10	4	0.310	0.312	0.591	3.000	**TM10050**	–
0.70	M4	3	0.115	0.125	0.276	2.000	**TM40070**	–
0.75	M4.5	3	0.120	0.125	0.266	2.000	**TM45075**	**TMMK0450-075**
0.75	M8	3	0.235	0.250	0.625	2.500	**TM80075**	**TMMK0800-075**
0.75	M10	4	0.310	0.312	0.591	3.000	**TM10075**	–
0.80	M5	3	0.120	0.125	0.312	2.000	**TM50080**	**TMMK0500-080**
1.00	M6	3	0.170	0.187	0.500	2.500	**TM60100**	**TMMK0600-100**
1.00	M12	4	0.360	0.375	0.875	3.500	**TM12100**	**TMMK1200-100**
1.25	M8	3	0.235	0.250	0.625	2.500	**TM80125**	**TMMK0800-125**
1.50	M10	4	0.300	0.312	0.750	3.000	**TM10150**	**TMMK1000-150**
1.50	M14	4	0.370	0.375	0.875	3.500	**TM14150**	**TMMK1400-150**
1.50	M18	4	0.490	0.500	1.250	3.500	**TM18150**	**TMMK1800-150**
1.50	M20	5	0.620	0.625	1.418	4.000	**TM20150**	–
1.75	M12	4	0.360	0.375	0.875	3.500	**TM12175**	**TMMK1200-175**
2.00	M14	4	0.429	0.500	1.103	3.500	**TM14200**	–
2.00	M16	4	0.470	0.500	1.250	3.500	**TM16200**	**TMMK1600-200**
2.50	M20	4	0.495	0.500	1.250	3.500	**TM20250**	**TMMK2000-250**
3.00	M24	4	0.620	0.625	1.375	4.000	**TM24300**	**TMMK2400-300**
3.50	M30	4	0.620	0.625	1.516	4.000	**TM30350**	–
4.00	M36	5	0.745	0.750	1.575	4.500	**TM36400**	–

*Straight fluted.

E: 52 - 55
Key on E: 1

E: 4

Weldon Flat

To order a thread mill with a Weldon flat, replace the leading TM designator with TW (available for inch shanks 3/8 and above or metric shanks 6 mm and above)
Example: Cylindrical shank = **TM**NK0500-NPT | Weldon shank flat = **TW**NK0500-NPT
NOTE: Weldon flats have a minimum order quantity of 2 pieces.

i = Imperial (in)
m = Metric (mm)

Solid Carbide Thread Mills

ISO | Coolant Through

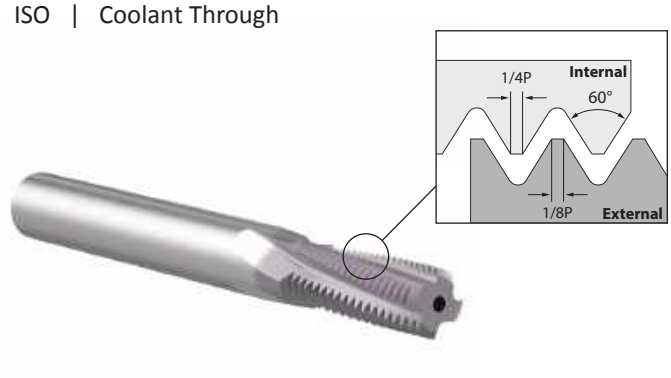

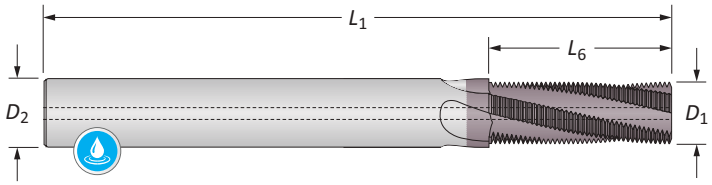

ISO | Coolant Through

	Pitch	Min Thread Ø	Flutes	Thread Mill D_1	D_2	L_6	L_1	Part No. ThreadMills USA™
	0.40	M2	3*	0.059	0.125	0.126	1.500	**TM20040CH**
	0.45	M2.5	3*	0.059	0.125	0.142	1.500	**TM25045CH**
	0.50	M3	3*	0.085	0.125	0.178	1.500	**TM30050CH**
	0.50	M6	3	0.181	0.187	0.473	2.375	**TM60050CH**
	0.50	M10	4	0.310	0.312	0.591	3.000	**TM10050CH**
	0.70	M4	3	0.115	0.125	0.276	1.500	**TM40070CH**
	0.75	M4.5	3	0.120	0.125	0.266	1.500	**TM45075CH**
	0.75	M8	3	0.235	0.250	0.625	2.375	**TM80075CH**
	0.75	M10	4	0.310	0.312	0.591	3.000	**TM10075CH**
	0.80	M5	3	0.120	0.125	0.312	1.500	**TM50080CH**
	1.00	M6	3	0.170	0.187	0.500	2.375	**TM60100CH**
	1.00	M12	4	0.360	0.375	0.875	3.000	**TM12100CH**
	1.25	M8	3	0.235	0.250	0.625	2.375	**TM80125CH**
	1.50	M10	4	0.300	0.312	0.750	3.000	**TM10150CH**
	1.50	M14	4	0.370	0.375	0.875	3.000	**TM14150CH**
	1.50	M18	4	0.490	0.500	1.250	3.500	**TM18150CH**
	1.50	M20	5	0.620	0.625	1.418	4.000	**TM20150CH**
	1.75	M12	4	0.360	0.375	0.875	3.000	**TM12175CH**
	2.00	M14	4	0.429	0.500	1.103	3.500	**TM14200CH**
	2.00	M16	4	0.470	0.500	1.250	3.500	**TM16200CH**
	2.50	M20	4	0.495	0.500	1.250	3.500	**TM20250CH**
	3.00	M24	4	0.620	0.625	1.375	4.000	**TM24300CH**
	3.50	M30	4	0.620	0.625	1.516	4.000	**TM30350CH**
	4.00	M36	5	0.745	0.750	1.575	4.500	**TM36400CH**

*Straight fluted.

E: 52 - 55
Key on E: 1

E: 4

Weldon Flat

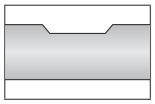

To order a thread mill with a Weldon flat, replace the leading TM designator with TW (available for inch shanks 3/8 and above or metric shanks 6 mm and above)
Example: Cylindrical shank = **TM**NK0500-NPT | Weldon shank flat = **TW**NK0500-NPT
NOTE: Weldon flats have a minimum order quantity of 2 pieces.

i = Imperial (in)
m = Metric (mm)

Solid Carbide Thread Mills

ISO | Noncoolant

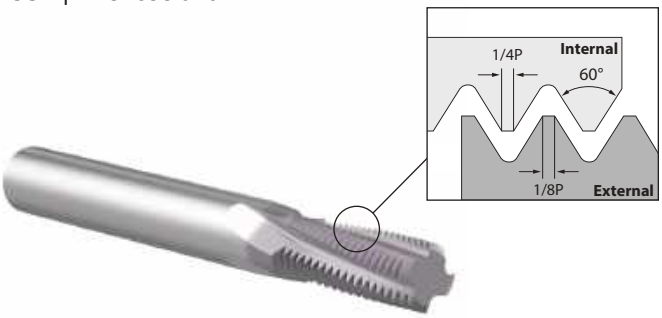

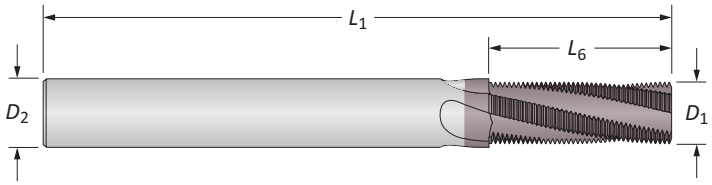

ISO | Noncoolant

	Pitch	Min Thread Ø	Flutes	Thread Mill D_1	D_2	L_6	L_1	Part No. ThreadMills USA™	AccuThread® 856
	0.40	M2	3*	1.50	3.00	3.20	39.00	**TM20040M**	**TMMK0200-040M**
	0.45	M2.5	3*	1.50	3.00	3.60	39.00	**TM25045M**	**TMMK0250-045M**
	0.50	M3	3*	2.15	3.00	4.50	39.00	**TM30050M**	**TMMK0300-050M**
	0.50	M6	3	4.60	6.00	12.00	58.00	**TM60050M**	**TMMK0600-050M**
	0.50	M10	4	7.95	8.00	15.00	64.00	**TM10050M**	**TMMK1000-050M**
	0.70	M4	3	2.90	3.00	8.00	39.00	**TM40070M**	**TMMK0400-070M**
	0.75	M4.5	3	3.00	4.00	6.75	51.00	**TM45075M**	**TMMK0450-075M**
	0.75	M6	3	4.60	6.00	12.00	58.00	**TM60075M**	**TMMK0600-075M**
	0.75	M10	4	7.95	8.00	15.00	64.00	**TM10075M**	**TMMK1000-075M**
	0.80	M5	3	3.60	4.00	8.00	51.00	**TM50080M**	**TMMK0500-080M**
	1.00	M6	3	4.60	6.00	12.00	58.00	**TM60100M**	**TMMK0600-100M**
	1.00	M12	4	9.40	10.00	20.00	73.00	**TM12100M**	**TMMK1200-100M**
m	1.25	M8	3	5.90	6.00	16.25	58.00	**TM80125M**	**TMMK0800-125M**
	1.50	M10	4	7.40	8.00	19.50	64.00	**TM10150M**	**TMMK1000-150M**
	1.50	M14	4	10.90	12.00	27.00	84.00	**TM14150M**	**TMMK1400-150M**
	1.50	M18	4	11.90	12.00	31.50	84.00	**TM18150M**	**TMMK1800-150M**
	1.50	M20	5	15.75	16.00	36.00	93.00	**TM20150M**	–
	1.75	M12	4	9.40	10.00	22.71	73.00	**TM12175M**	**TMMK1200-175M**
	2.00	M14	4	10.90	12.00	28.00	84.00	**TM14200M**	**TMMK1400-200M**
	2.00	M16	4	11.95	12.00	30.00	84.00	**TM16200M**	–
	2.50	M20	4	11.90	12.00	30.00	84.00	**TM20250M**	**TMMK2000-250M**
	3.00	M24	4	15.90	16.00	36.00	93.00	**TM24300M**	**TMMK2400-300M**
	3.50	M30	4	15.75	16.00	38.50	100.00	**TM30350M**	**TMMK3000-350M**
	4.00	M36	5	19.90	20.00	40.00	105.00	**TM36400M**	**TMMK3600-400M**

*Straight fluted.

E: 52 - 55
Key on E: 1

E: 4

Weldon Flat

To order a thread mill with a Weldon flat, replace the leading TM designator with TW (available for inch shanks 3/8 and above or metric shanks 6 mm and above)
Example: Cylindrical shank = **TM**NK0500-NPT | Weldon shank flat = **TW**NK0500-NPT
NOTE: Weldon flats have a minimum order quantity of 2 pieces.

i = Imperial (in)
m = Metric (mm)

Solid Carbide Thread Mills

ISO | Coolant Through

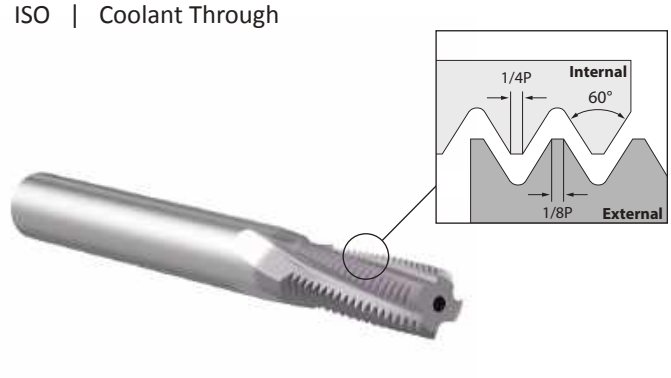

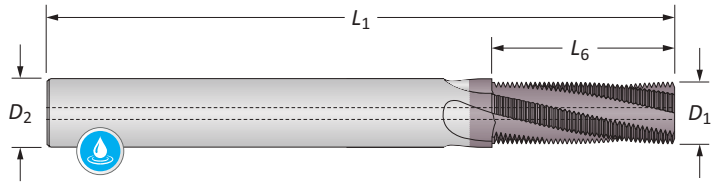

ISO | Coolant Through

	Pitch	Min Thread Ø	Flutes	Thread Mill D_1	D_2	L_6	L_1	Part No. ThreadMills USA™
	0.40	M2	3*	1.50	3.00	3.20	39.00	**TM20040CHM**
	0.45	M2.5	3*	1.50	3.00	3.60	39.00	**TM25045CHM**
	0.50	M3	3*	2.15	3.00	4.50	39.00	**TM30050CHM**
	0.50	M6	3	4.60	6.00	12.00	58.00	**TM60050CHM**
	0.50	M10	4	7.95	8.00	15.00	64.00	**TM10050CHM**
	0.70	M4	3	2.90	3.00	8.00	39.00	**TM40070CHM**
	0.75	M4.5	3	3.00	4.00	6.75	51.00	**TM45075CHM**
	0.75	M6	3	4.60	6.00	12.00	58.00	**TM60075CHM**
	0.75	M10	4	7.95	8.00	15.00	64.00	**TM10075CHM**
	0.80	M5	3	3.60	4.00	8.00	51.00	**TM50080CHM**
	1.00	M6	3	4.60	6.00	12.00	58.00	**TM60100CHM**
	1.00	M12	4	9.40	10.00	20.00	84.00	**TM12100CHM**
m	1.25	M8	3	5.90	6.00	16.25	58.00	**TM80125CHM**
	1.50	M10	4	7.40	8.00	19.50	64.00	**TM10150CHM**
	1.50	M14	4	10.90	12.00	27.00	84.00	**TM14150CHM**
	1.50	M18	4	11.90	12.00	31.50	84.00	**TM18150CHM**
	1.50	M20	5	15.75	16.00	36.00	93.00	**TM20150CHM**
	1.75	M12	4	9.40	10.00	22.71	84.00	**TM12175CHM**
	2.00	M14	4	10.90	12.00	28.00	84.00	**TM14200CHM**
	2.00	M16	4	11.95	12.00	30.00	84.00	**TM16200CHM**
	2.50	M20	4	11.90	12.00	30.00	84.00	**TM20250CHM**
	3.00	M24	4	15.90	16.00	36.00	93.00	**TM24300CHM**
	3.50	M30	4	15.75	16.00	38.50	100.00	**TM30350CHM**
	4.00	M36	5	19.90	20.00	40.00	105.00	**TM36400CHM**

*Straight fluted.

E: 52 - 55
Key on E: 1

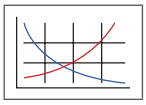

E: 4

Weldon Flat

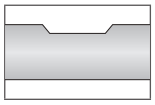

To order a thread mill with a Weldon flat, replace the leading TM designator with TW (available for inch shanks 3/8 and above or metric shanks 6 mm and above)
Example: Cylindrical shank = TMNK0500-NPT | Weldon shank flat = TWNK0500-NPT
NOTE: Weldon flats have a minimum order quantity of 2 pieces.

i = Imperial (in)
m = Metric (mm)

Solid Carbide Thread Mills

Imperial | UN | 2xD

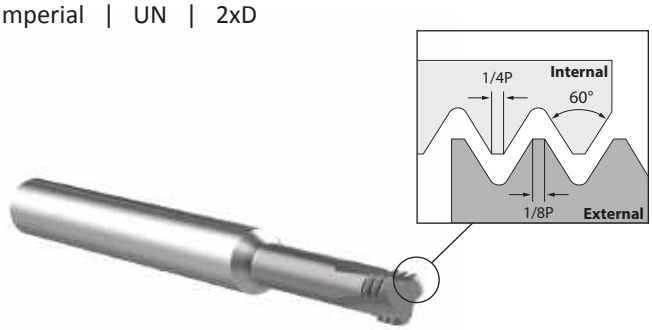

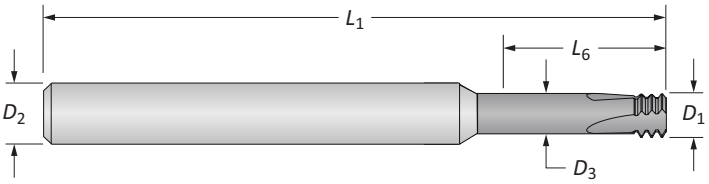

UN | Noncoolant

	TPI (Pitch)	Min Thread Ø	Flutes	Thread Mill D_1	D_3	D_2	L_6	L_1	Part No. AccuThread® T3
	64	#1	3	0.055	0.035	0.250	0.150	2.500	**TM07364-3T2X**
	56	#2	3	0.065	0.042	0.250	0.170	2.500	**TM08656-3T2X**
	48	#3	3	0.075	0.049	0.250	0.200	2.500	**TM09948-3T2X**
	40	#4	3	0.085	0.054	0.250	0.250	2.500	**TM11240-3T2X**
	36	#8	3	0.130	0.095	0.250	0.350	2.500	**TM16436-3T2X**
	32	#6	3	0.100	0.061	0.250	0.280	2.500	**TM13832-3T2X**
	32	#8	3	0.126	0.087	0.250	0.370	2.500	**TM16432-3T2X**
	32	#10	3	0.145	0.106	0.250	0.410	2.500	**TM19032-3T2X**
	28	1/4	3	0.197	0.153	0.250	0.570	2.500	**TM25028-3T2X**
	24	#10	3	0.138	0.086	0.250	0.420	2.500	**TM19024-3T2X**
	24	5/16	3	0.260	0.208	0.312	0.670	2.500	**TM31224-3T2X**
	20	1/4	3	0.187	0.125	0.250	0.550	2.500	**TM25020-3T2X**
i	20	7/16	4	0.312	0.250	0.312	0.980	2.500	**TM43720-3T2X**
	18	5/16	3	0.236	0.168	0.250	0.670	2.500	**TM31218-3T2X**
	16	3/8	3	0.264	0.187	0.312	0.870	2.500	**TM37516-3T2X**
	16	3/4	4	0.495	0.414	0.500	1.500	3.500	**TM75016-3T2X**
	14	7/16	4	0.300	0.212	0.312	0.980	2.500	**TM43714-3T2X**
	14	7/8	4	0.620	0.528	0.625	1.750	4.000	**TM87514-3T2X**
	13	1/2	4	0.360	0.266	0.375	1.080	3.000	**TM50013-3T2X**
	12	9/16	4	0.410	0.308	0.500	1.240	3.500	**TM56212-3T2X**
	12	3/4	4	0.495	0.389	0.500	1.500	3.500	**TM75012-3T2X**
	11	5/8	4	0.470	0.355	0.500	1.250	3.500	**TM62511-3T2X**
	10	3/4	4	0.495	0.369	0.500	1.500	3.500	**TM75010-3T2X**
	9	7/8	4	0.620	0.480	0.625	1.750	4.000	**TM87509-3T2X**
	8	1	4	0.620	0.463	0.625	2.000	4.000	**TM10008-3T2X**

E: 58 - 59
Key on E: 1
E: 7

i = Imperial (in)
m = Metric (mm)

Solid Carbide Thread Mills

Metric | UN | 2xD

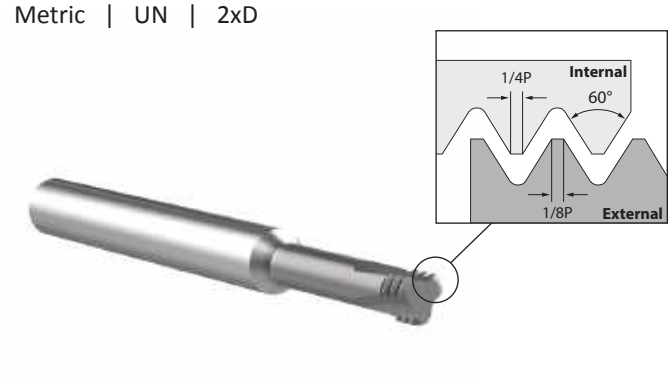

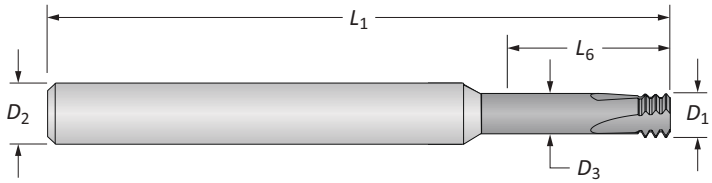

UN | Noncoolant

	TPI (Pitch)	Min Thread Ø	Flutes	Thread Mill D_1	D_3	D_2	L_6	L_1	Part No. AccuThread® T3
	64	#1	3	1.40	0.89	6.00	3.81	63.00	**TM07364M-3T2X**
	56	#2	3	1.65	1.08	6.00	4.32	63.00	**TM08656M-3T2X**
	48	#3	3	1.91	1.24	6.00	5.08	63.00	**TM09948M-3T2X**
	40	#4	3	2.16	1.36	6.00	6.35	63.00	**TM11240M-3T2X**
	36	#8	3	3.30	2.42	6.00	8.89	63.00	**TM16436M-3T2X**
	32	#6	3	2.54	1.55	6.00	7.11	63.00	**TM13832M-3T2X**
	32	#8	3	3.20	2.21	6.00	9.40	63.00	**TM16432M-3T2X**
	32	#10	3	3.68	2.70	6.00	10.41	63.00	**TM19032M-3T2X**
	28	1/4	3	5.00	3.88	6.00	14.48	63.00	**TM25028M-3T2X**
	24	#10	3	3.51	2.20	6.00	10.67	63.00	**TM19024M-3T2X**
	24	5/16	3	6.60	5.30	8.00	17.02	64.00	**TM31224M-3T2X**
ⓜ	20	1/4	3	4.75	3.18	6.00	13.97	63.00	**TM25020M-3T2X**
	20	7/16	4	7.92	6.36	8.00	24.89	64.00	**TM43720M-3T2X**
	18	5/16	3	5.94	4.26	6.00	17.02	63.00	**TM31218M-3T2X**
	16	3/8	3	6.71	4.76	8.00	22.10	64.00	**TM37516M-3T2X**
	16	3/4	4	11.94	9.88	12.00	38.10	88.90	**TM75016M-3T2X**
	14	7/16	4	7.62	5.39	8.00	24.89	64.00	**TM43714M-3T2X**
	14	7/8	4	15.75	13.42	16.00	44.45	100.00	**TM87514M-3T2X**
	12	3/4	4	11.94	9.24	12.00	38.10	88.90	**TM75012M-3T2X**
	11	5/8	4	11.94	9.01	12.00	31.75	88.90	**TM62511M-3T2X**
	10	3/4	4	11.94	8.73	12.00	38.10	88.90	**TM75010M-3T2X**
	9	7/8	4	15.75	12.20	16.00	44.45	100.00	**TM87509M-3T2X**
	8	1	4	15.75	11.77	16.00	50.80	100.00	**TM10008M-3T2X**

E: 58 - 59
Key on E: 1
E: 7

ⓘ = Imperial (in)
ⓜ = Metric (mm)

A DRILLING
B BORING
C REAMING
D BURNISHING
E THREADING
X SPECIALS

Solid Carbide Thread Mills

UN | 3xD

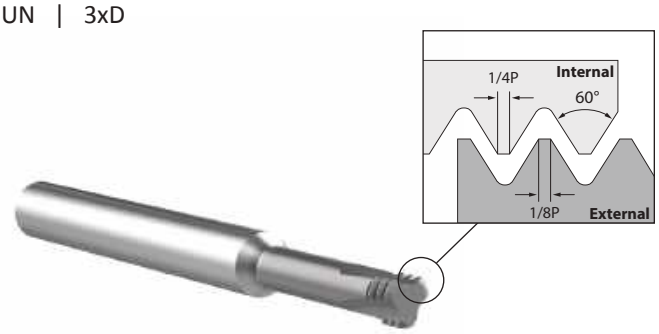

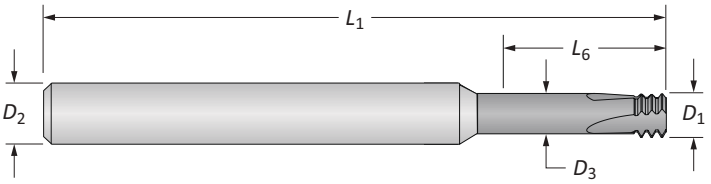

UN | Noncoolant

	TPI (Pitch)	Min Thread Ø	Flutes	Thread Mill D_1	D_3	D_2	L_6	L_1	Part No. AccuThread® T3
i	40	#4	3	0.085	0.054	0.250	0.310	2.500	**TM11240-3T3X**
	32	#6	3	0.100	0.061	0.250	0.410	2.500	**TM13832-3T3X**
	32	#8	3	0.126	0.087	0.250	0.490	2.500	**TM16432-3T3X**
	32	#10	3	0.145	0.106	0.250	0.590	2.500	**TM19032-3T3X**
	28	1/4	3	0.197	0.153	0.250	0.750	2.500	**TM25028-3T3X**
	24	#10	3	0.138	0.086	0.250	0.590	2.500	**TM19024-3T3X**
	24	5/16	3	0.260	0.208	0.312	0.940	2.500	**TM31224-3T3X**
	20	1/4	3	0.187	0.125	0.250	0.750	2.500	**TM25020-3T3X**
	18	5/16	3	0.236	0.168	0.250	0.910	2.500	**TM31218-3T3X**
	16	3/4	4	0.495	0.414	0.500	2.250	4.000	**TM75016-3T3X**
	14	7/8	4	0.620	0.528	0.625	2.625	4.000	**TM87514-3T3X**
	12	3/4	4	0.495	0.389	0.500	2.250	4.000	**TM75012-3T3X**
	11	5/8	4	0.470	0.355	0.500	1.875	4.000	**TM62511-3T3X**
	10	3/4	4	0.495	0.369	0.500	2.250	4.000	**TM75010-3T3X**
	9	7/8	4	0.620	0.480	0.625	2.625	4.000	**TM87509-3T3X**
	8	1	4	0.620	0.463	0.625	3.000	4.500	**TM10008-3T3X**
m	40	#4	3	2.16	1.36	6.00	7.87	63.00	**TM11240M-3T3X**
	32	#6	3	2.54	1.55	6.00	10.41	63.00	**TM13832M-3T3X**
	32	#8	3	3.20	2.21	6.00	12.45	63.00	**TM16432M-3T3X**
	32	#10	3	3.68	2.70	6.00	14.99	63.00	**TM19032M-3T3X**
	28	1/4	3	5.00	3.88	6.00	19.05	63.00	**TM25028M-3T3X**
	24	#10	3	3.51	2.20	6.00	14.99	63.00	**TM19024M-3T3X**
	24	5/16	3	6.60	5.30	8.00	23.88	64.00	**TM31224M-3T3X**
	20	1/4	3	4.75	3.18	6.00	19.05	63.00	**TM25020M-3T3X**
	18	5/16	3	5.94	4.21	6.00	23.11	63.00	**TM31218M-3T3X**
	16	3/4	4	11.94	9.88	12.00	57.15	88.90	**TM75016M-3T3X**
	14	7/8	4	15.75	13.42	16.00	66.68	100.00	**TM87514M-3T3X**
	12	3/4	4	11.94	9.24	12.00	57.15	88.90	**TM75012M-3T3X**
	11	5/8	4	11.94	9.01	12.00	47.63	88.90	**TM62511M-3T3X**
	10	3/4	4	11.94	8.73	12.00	57.15	88.90	**TM75010M-3T3X**
	9	7/8	4	15.75	12.20	16.00	66.68	100.00	**TM87509M-3T3X**
	8	1	4	15.75	11.77	16.00	76.20	114.30	**TM10008M-3T3X**

E: 58 - 59
Key on E: 1
E: 7

i = Imperial (in)
m = Metric (mm)

Solid Carbide Thread Mills

ISO | 2xD

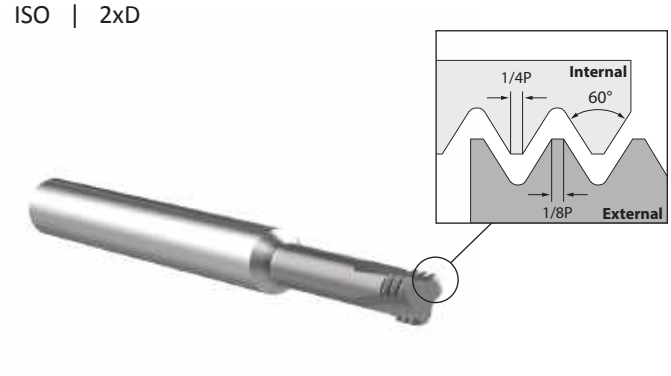

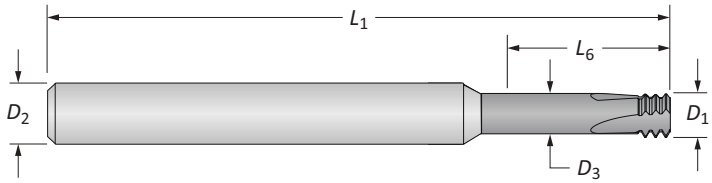

ISO | Noncoolant

	Pitch	Min Thread Ø	Flutes	Thread Mill D_1	D_3	D_2	L_6	L_1	Part No. AccuThread® T3
	0.35	M1.8	3	0.053	0.033	0.250	0.170	2.500	**TM18035-3T2X**
	0.40	M2	3	0.061	0.041	0.250	0.180	2.500	**TM20040-3T2X**
	0.45	M2.5	3	0.077	0.055	0.250	0.220	2.500	**TM25045-3T2X**
	0.50	M3	3	0.093	0.068	0.250	0.260	2.500	**TM30050-3T2X**
	0.60	M3.5	3	0.108	0.078	0.250	0.300	2.500	**TM35060-3T2X**
	0.70	M4	3	0.122	0.088	0.250	0.350	2.500	**TM40070-3T2X**
	0.75	M4.5	3	0.133	0.095	0.250	0.430	2.500	**TM45075-3T2X**
	0.80	M5	3	0.150	0.111	0.250	0.490	2.500	**TM50080-3T2X**
i	1.00	M6	3	0.183	0.134	0.250	0.550	2.500	**TM60100-3T2X**
	1.25	M8	3	0.234	0.173	0.250	0.710	2.500	**TM80125-3T2X**
	1.50	M10	4	0.307	0.234	0.312	0.910	2.500	**TM10150-3T2X**
	1.50	M14	4	0.370	0.293	0.375	1.100	3.500	**TM14150-3T2X**
	1.50	M18	4	0.495	0.418	0.500	1.420	3.500	**TM18150-3T2X**
	1.75	M12	4	0.310	0.225	0.312	0.945	2.500	**TM12175-3T2X**
	2.00	M16	4	0.470	0.370	0.500	1.260	3.500	**TM16200-3T2X**
	2.50	M20	4	0.590	0.466	0.625	1.570	4.000	**TM20250-3T2X**
	3.00	M24	4	0.620	0.472	0.625	1.890	4.000	**TM24300-3T2X**
	0.35	M1.8	3	1.35	0.84	6.00	4.32	63.00	**TM18035M-3T2X**
	0.40	M2	3	1.55	1.04	6.00	4.60	63.00	**TM20040M-3T2X**
	0.45	M2.5	3	1.96	1.38	6.00	5.60	63.00	**TM25045M-3T2X**
	0.50	M3	3	2.36	1.73	6.00	6.60	63.00	**TM30050M-3T2X**
	0.60	M3.5	3	2.74	1.99	6.00	7.60	63.00	**TM35060M-3T2X**
	0.70	M4	3	3.10	2.22	6.00	8.90	63.00	**TM40070M-3T2X**
	0.75	M4.5	3	3.38	2.41	6.00	10.92	63.00	**TM45075M-3T2X**
	0.80	M5	3	3.81	2.81	6.00	12.40	63.00	**TM50080M-3T2X**
m	1.00	M6	3	4.65	3.41	6.00	14.00	63.00	**TM60100M-3T2X**
	1.25	M8	3	5.94	4.40	6.00	18.00	63.00	**TM80125M-3T2X**
	1.50	M10	4	7.80	5.95	8.00	23.10	64.00	**TM10150M-3T2X**
	1.50	M14	4	9.40	7.45	10.00	27.94	88.90	**TM14150M-3T2X**
	1.50	M18	4	11.94	9.98	12.00	36.07	88.90	**TM18150M-3T2X**
	1.75	M12	4	7.92	5.78	8.00	24.00	64.00	**TM12175M-3T2X**
	2.00	M16	4	11.94	9.40	12.00	32.00	88.90	**TM16200M-3T2X**
	2.50	M20	4	14.99	11.83	16.00	39.88	100.00	**TM20250M-3T2X**
	3.00	M24	4	15.75	11.98	16.00	48.01	100.00	**TM24300M-3T2X**

E: 58 - 59
Key on E: 1
E: 7

i = Imperial (in)
m = Metric (mm)

Solid Carbide Thread Mills

ISO | 3xD

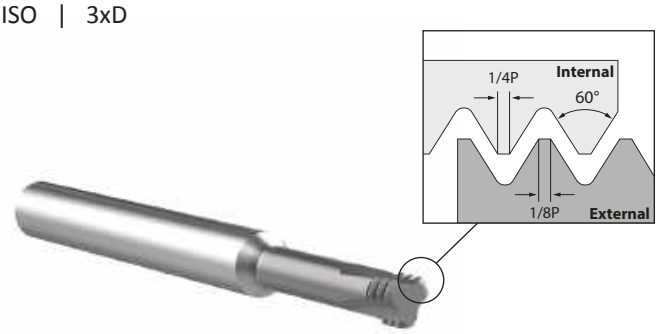

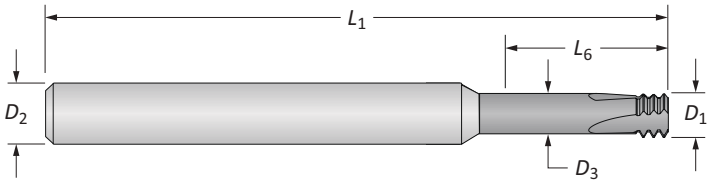

ISO | Noncoolant

	Pitch	Min Thread Ø	Flutes	Thread Mill D_1	D_3	D_2	L_6	L_1	Part No. AccuThread® T3
i	0.45	M2.5	3	0.077	0.055	0.250	0.300	2.500	**TM25045-3T3X**
	0.50	M3	3	0.093	0.068	0.250	0.370	2.500	**TM30050-3T3X**
	0.60	M3.5	3	0.108	0.078	0.250	0.450	2.500	**TM35060-3T3X**
	0.70	M4	3	0.122	0.088	0.250	0.490	2.500	**TM40070-3T3X**
	0.80	M5	3	0.150	0.111	0.250	0.630	2.500	**TM50080-3T3X**
	1.00	M6	3	0.183	0.134	0.250	0.790	2.500	**TM60100-3T3X**
	1.25	M8	3	0.234	0.173	0.250	0.940	2.500	**TM80125-3T3X**
	1.50	M10	4	0.307	0.234	0.312	1.120	2.500	**TM10150-3T3X**
	1.50	M14	4	0.370	0.293	0.375	1.650	3.500	**TM14150-3T3X**
	1.50	M18	4	0.495	0.418	0.500	2.120	4.000	**TM18150-3T3X**
	1.75	M12	4	0.310	0.225	0.312	1.418	2.500	**TM12175-3T3X**
	2.00	M16	4	0.470	0.370	0.500	1.950	4.000	**TM16200-3T3X**
	2.50	M20	4	0.590	0.466	0.625	2.360	4.000	**TM20250-3T3X**
	3.00	M24	4	0.620	0.472	0.625	2.830	4.000	**TM24300-3T3X**
m	0.45	M2.5	3	1.96	1.38	6.00	7.60	63.00	**TM25045M-3T3X**
	0.50	M3	3	2.36	1.73	6.00	9.40	63.00	**TM30050M-3T3X**
	0.60	M3.5	3	2.74	1.99	6.00	11.40	63.00	**TM35060M-3T3X**
	0.70	M4	3	3.10	2.22	6.00	12.40	63.00	**TM40070M-3T3X**
	0.80	M5	3	3.81	2.81	6.00	16.00	63.00	**TM50080M-3T3X**
	1.00	M6	3	4.65	3.41	6.00	20.10	63.00	**TM60100M-3T3X**
	1.25	M8	3	5.94	4.40	6.00	23.90	63.00	**TM80125M-3T3X**
	1.50	M10	4	7.80	5.95	8.00	28.40	64.00	**TM10150M-3T3X**
	1.50	M14	4	9.40	7.45	10.00	41.91	88.90	**TM14150M-3T3X**
	1.50	M18	4	11.94	9.98	12.00	53.85	88.90	**TM18150M-3T3X**
	1.75	M12	4	7.92	5.78	8.00	36.00	64.00	**TM12175M-3T3X**
	2.00	M16	4	11.94	9.40	12.00	49.53	88.90	**TM16200M-3T3X**
	2.50	M20	4	14.99	11.83	16.00	59.94	100.00	**TM20250M-3T3X**
	3.00	M24	4	15.75	11.98	16.00	71.88	100.00	**TM24300M-3T3X**

E: 58 - 59
Key on E: 1
E: 7

i = Imperial (in)
m = Metric (mm)

Notes

Indexable Insert Thread Mills Overview

Bolt-in Style

- Replaceable inserts allow for quick setups and tool changes to keep the production process moving smoothly.
- Inserts are available with AM210® coating, which increases tool life.
- Available with 1 flute only.
- Multiple thread form styles are available.
- Tapered thread forms: NPT, NPTF, BSPT.
- Straight thread forms: BSPP, UN, UNJ, ISO.

Bolt-in Style Indexable Thread Mill Assembly

Step 1:
Slide the thread mill insert into the insert holder slot.

Step 2:
Hand tighten insert screws to hold insert in place.

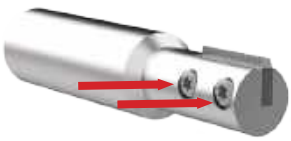

Step 3:
Tighten each screw to 1.5 Nm (1.1 ft-lbs).

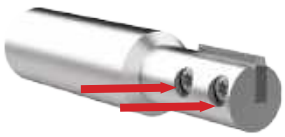

Step 4:
Tighten each screw to 3.5 Nm (2.6 ft-lbs).

Pin Style

- Replaceable inserts allow for quick setups and tool changes to keep the production process moving smoothly.
- Inserts are available with AM210® coating, which increases tool life.
- Holders available in 2 styles: Weldon Shank and Shell Mill.
- Weldon Shank holders available with 1, 2, 3, and 5 flutes.
- Shell Mill holders available with 6, 7, and 8 flutes .
- Thread forms available: NPT, NPTF, BSPT, BSPP, API-ROUND, ACME, UN, UNJ, ISO.

Pin Style Indexable Thread Mill Assembly

Step 1:
Slide the thread mill insert into the insert holder slot.

Step 2:
Slide the pin into the pin holder slot to hold the insert in place.

Step 3:
Hand tighten insert screws to hold insert in place. If there are three insert screws, start tightening the middle screw, then the two outer screws. Repeat for each insert.

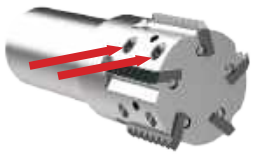

Step 4:
Following the order from step three, tighten each screw to 1.5 Nm (1.1 ft-lbs).

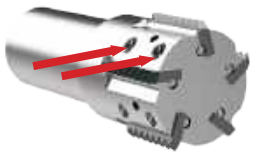

Step 5:
Following the order from step three, tighten each screw to 3.5 Nm (2.6 ft-lbs).

Product Nomenclature

AccuThread® 856 Indexable Inserts

TP	075	K	–	UN	32	I
1	2	3		4	5	6

Bolt-in Style

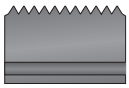
Pin Style

1. Insert Style
- **TP** = Bolt-in
- **TN** = Pin style

2. Insert Length
- **075** = 3/4
- **100** = 1.00
- **150** = 1.50

3. Coating
- **K** = AM210®
- **A** = TiAlN
- **U** = Uncoated

4. Thread Class
- **UN** = UN
- **UNJ** = UNJ
- **NPT** = NPT
- **NPTF** = NPTF
- **BSPP** = BSPP
- **BSPT** = BSPT
- **M** = ISO
- **FA** = Full ACME
- **AP** = API Round

5. Thread Pitch
- **20** = UN
- **1.0** = ISO

6. Thread Style
- **I** = Internal
- **E** = External

Indexable Inserts

Symbol	Attribute
L_6	Length of insert
T_1	Insert thickness

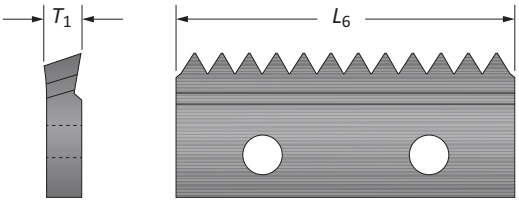

AccuThread® 856 Indexable Insert Holders

THT	–	0400	–	1F	075	M
1		2		3	4	5

1. Holder Style

Bolt-in Style	Pin Style
THT = Tapered Head	**THP** = Weldon Positive Rake
THN = Straight Head	**TNR** = Weldon Neutral Rake
	TSN = Shell Mill Positive Rake
	TSR = Shell Mill Neutral Rake

2. Cutter Diameter
- **0400** = 0.400

3. Shank Designation
- **1F** = 1 flute
- **2F** = 2 flutes
- **3F** = 3 flutes
- **5F** = 5 flutes
- **6F** = 6 flutes
- **7F** = 7 flutes
- **8F** = 8 flutes

4. Length of Insert
- **075** = 3/4
- **100** = 1.00
- **150** = 1.50

5. Shank Designation
- **Blank** = Inch
- **M** = Metric

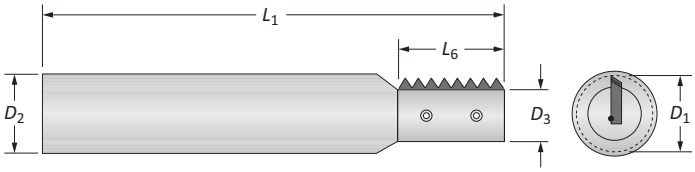

Bolt-in Style Holders

Symbol	Attribute	Symbol	Attribute
D_1	Maximum cutter diameter	L_1	Overall length
D_2	Shank diameter	L_6	Length of insert
D_3	Pilot diameter		

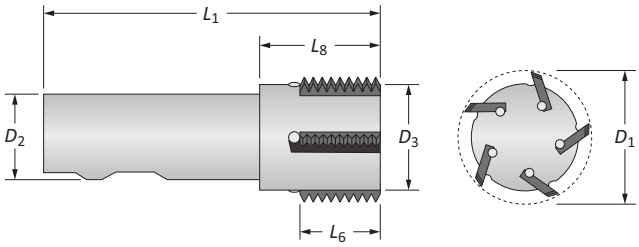

Pin Style Holders

Symbol	Attribute	Symbol	Attribute
D_1	Cutter diameter	D_5	Bore diameter (Shell Mill)
D_1*	Oversized cutter diameter	L_1	Overall length
D_2	Shank diameter	L_6	Length of insert
D_3	Pilot diameter	L_8	Flute length
D_4	Body diameter (Shell Mill)	T_2	Slot width (Shell Mill)

A DRILLING
B BORING
C REAMING
D BURNISHING
E THREADING
X SPECIALS

AccuThread® 856 Thread Mill Inserts

Bolt-in Style | NPT / NPTF

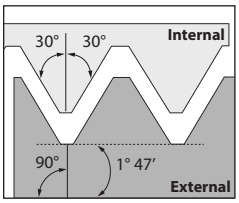

NPT
Internal / External

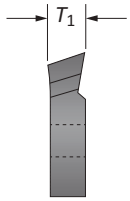

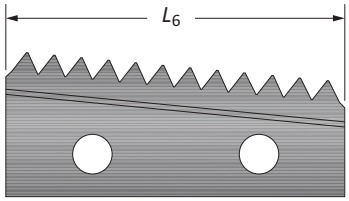

TPI (Pitch)	Insert L_6 inch	Insert L_6 mm	Insert T_1 inch	Insert T_1 mm	Part No. NPT Internal/External
18	0.750	19.05	0.080	2.03	**TP075K-NPT18**
14	1.000	25.40	0.140	3.56	**TP100K-NPT14**

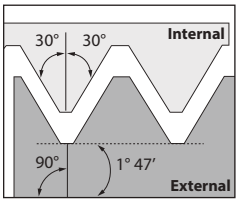

NPTF
Internal / External

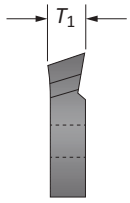

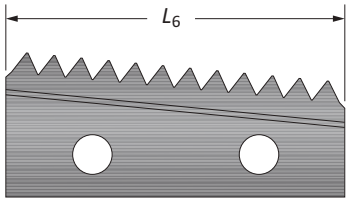

TPI (Pitch)	Insert L_6 inch	Insert L_6 mm	Insert T_1 inch	Insert T_1 mm	Part No. NPTF Internal/External
18	0.750	19.05	0.080	2.03	**TP075K-NPTF18**
14	1.000	25.40	0.140	3.56	**TP100K-NPTF14**

E: 60 - 63
Key on E: 1
E: 37
E: 43

Inserts sold in quantities of 2

AccuThread® 856 Thread Mill Inserts

Bolt-in Style | BSPT / BSPP

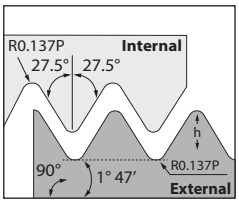

BSPT
Internal / External

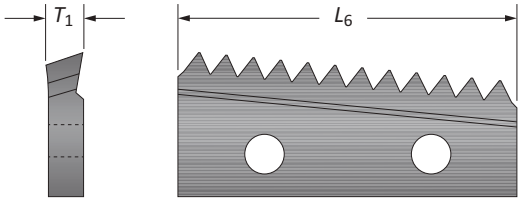

TPI (Pitch)	Insert L_6 inch	Insert L_6 mm	Insert T_1 inch	Insert T_1 mm	Part No. BSPT Internal/External
19	0.750	19.05	0.080	2.03	**TP075K-BSPT19**
19	1.000	25.40	0.140	3.56	**TP100K-BSPT19**
14	1.000	25.40	0.140	3.56	**TP100K-BSPT14**

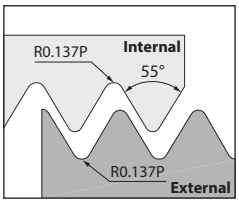

BSPP
Internal / External

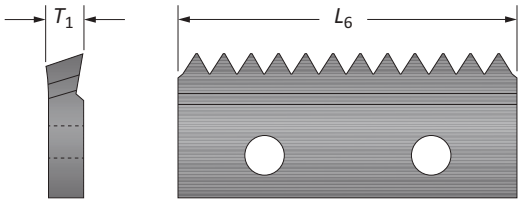

TPI (Pitch)	Insert L_6 inch	Insert L_6 mm	Insert T_1 inch	Insert T_1 mm	Part No. BSPP Internal/External
19	0.750	19.05	0.080	2.03	**TP075K-BSPP19**
19	1.000	25.40	0.140	3.56	**TP100K-BSPP19**
14	1.000	25.40	0.140	3.56	**TP100K-BSPP14**

E: 60 - 63
Key on E: 1
E: 37
E: 43

Inserts sold in quantities of 2

A DRILLING
B BORING
C REAMING
D BURNISHING
E THREADING
X SPECIALS

AccuThread® 856 Thread Mill Inserts

Bolt-in Style | UN

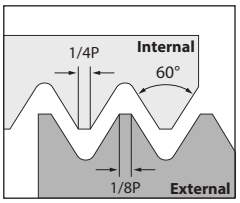

UN
Internal

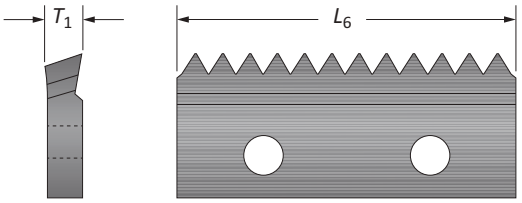

TPI (Pitch)	Insert L_6 inch	Insert L_6 mm	Insert T_1 inch	Insert T_1 mm	Part No. UN Internal
32	0.750	19.05	0.080	2.03	**TP075K-UN32I**
32	1.000	25.40	0.140	3.56	**TP100K-UN32I**
24	0.750	19.05	0.080	2.03	**TP075K-UN24I**
24	1.000	25.40	0.140	3.56	**TP100K-UN24I**
20	0.750	19.05	0.080	2.03	**TP075K-UN20I**
20	1.000	25.40	0.140	3.56	**TP100K-UN20I**
18	0.750	19.05	0.080	2.03	**TP075K-UN18I**
18	1.000	25.40	0.140	3.56	**TP100K-UN18I**
16	0.750	19.05	0.080	2.03	**TP075K-UN16I**
16	1.000	25.40	0.140	3.56	**TP100K-UN16I**
14	1.000	25.40	0.140	3.56	**TP100K-UN14I**
13	1.000	25.40	0.140	3.56	**TP100K-UN13I**
12	1.000	25.40	0.140	3.56	**TP100K-UN12I**
10*	1.000	25.40	0.140	3.56	**TP100K-UN10I***

*This item is only used with THN-0611-1F100. The reduced body allows a 3/4"-10 UN/UNJ to be produced.

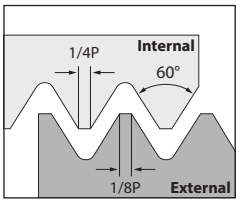

UN
External

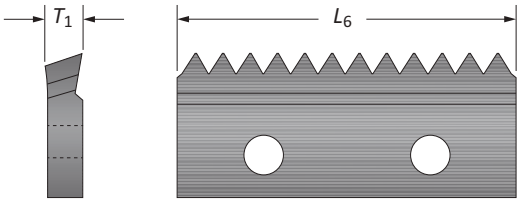

TPI (Pitch)	Insert L_6 inch	Insert L_6 mm	Insert T_1 inch	Insert T_1 mm	Part No. UN External
32	0.750	19.05	0.080	2.03	**TP075K-UN32E**
32	1.000	25.40	0.140	3.56	**TP100K-UN32E**
24	0.750	19.05	0.080	2.03	**TP075K-UN24E**
24	1.000	25.40	0.140	3.56	**TP100K-UN24E**
20	0.750	19.05	0.080	2.03	**TP075K-UN20E**
20	1.000	25.40	0.140	3.56	**TP100K-UN20E**
18	0.750	19.05	0.080	2.03	**TP075K-UN18E**
18	1.000	25.40	0.140	3.56	**TP100K-UN18E**
16	0.750	19.05	0.080	2.03	**TP075K-UN16E**
16	1.000	25.40	0.140	3.56	**TP100K-UN16E**
14	1.000	25.40	0.140	3.56	**TP100K-UN14E**
13	1.000	25.40	0.140	3.56	**TP100K-UN13E**
12	1.000	25.40	0.140	3.56	**TP100K-UN12E**
10*	1.000	25.40	0.140	3.56	**TP100K-UN10E***

*This item is only used with THN-0611-1F100. The reduced body allows a 3/4"-10 UN/UNJ to be produced.

E: 60 - 63
Key on E: 1
E: 37
E: 43

Inserts sold in quantities of 2

AccuThread® 856 Thread Mill Inserts

Bolt-in Style | UNJ

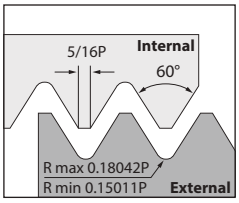

UNJ
Internal

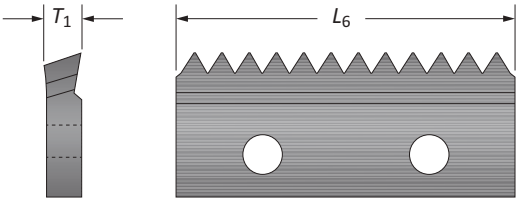

TPI (Pitch)	Insert L_6 inch	Insert L_6 mm	Insert T_1 inch	Insert T_1 mm	Part No. UNJ Internal
32	0.750	19.05	0.080	2.03	**TP075K-UNJ32I**
32	1.000	25.40	0.140	3.56	**TP100K-UNJ32I**
24	0.750	19.05	0.080	2.03	**TP075K-UNJ24I**
24	1.000	25.40	0.140	3.56	**TP100K-UNJ24I**
20	0.750	19.05	0.080	2.03	**TP075K-UNJ20I**
20	1.000	25.40	0.140	3.56	**TP100K-UNJ20I**
18	0.750	19.05	0.080	2.03	**TP075K-UNJ18I**
18	1.000	25.40	0.140	3.56	**TP100K-UNJ18I**
16	0.750	19.05	0.080	2.03	**TP075K-UNJ16I**
16	1.000	25.40	0.140	3.56	**TP100K-UNJ16I**
14	1.000	25.40	0.140	3.56	**TP100K-UNJ14I**
12	1.000	25.40	0.140	3.56	**TP100K-UNJ12I**

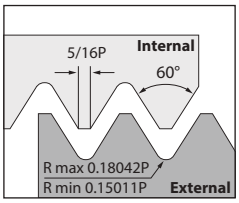

UNJ
External

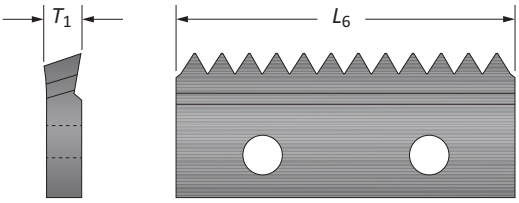

TPI (Pitch)	Insert L_6 inch	Insert L_6 mm	Insert T_1 inch	Insert T_1 mm	Part No. UNJ External
32	0.750	19.05	0.080	2.03	**TP075K-UNJ32E**
32	1.000	25.40	0.140	3.56	**TP100K-UNJ32E**
24	0.750	19.05	0.080	2.03	**TP075K-UNJ24E**
24	1.000	25.40	0.140	3.56	**TP100K-UNJ24E**
20	0.750	19.05	0.080	2.03	**TP075K-UNJ20E**
20	1.000	25.40	0.140	3.56	**TP100K-UNJ20E**
18	0.750	19.05	0.080	2.03	**TP075K-UNJ18E**
18	1.000	25.40	0.140	3.56	**TP100K-UNJ18E**
16	0.750	19.05	0.080	2.03	**TP075K-UNJ16E**
16	1.000	25.40	0.140	3.56	**TP100K-UNJ16E**
12	1.000	25.40	0.140	3.56	**TP100K-UNJ12E**

E: 60 - 63
E: 37
E: 43
Key on E: 1

Inserts sold in quantities of 2

A DRILLING
B BORING
C REAMING
D BURNISHING
E THREADING
X SPECIALS

AccuThread® 856 Thread Mill Inserts

Bolt-in Style | ISO

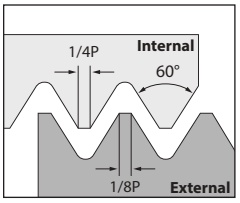

ISO
Internal

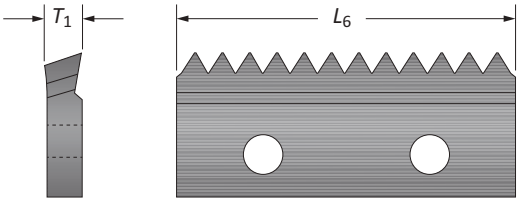

Pitch	Insert L_6 inch	Insert L_6 mm	Insert T_1 inch	Insert T_1 mm	Part No. ISO Internal
0.5	0.750	19.05	0.080	2.03	**TP075K-M0.5I**
1.0	0.750	19.05	0.080	2.03	**TP075K-M1.0I**
1.0	1.000	24.40	0.140	3.56	**TP100K-M1.0I**
1.25	0.750	19.05	0.080	2.03	**TP075K-M1.25I**
1.5	0.750	19.05	0.080	2.03	**TP075K-M1.5I**
1.5	1.000	25.40	0.140	3.56	**TP100K-M1.5I**
2.0	1.000	25.40	0.140	3.56	**TP100K-M2.0I**

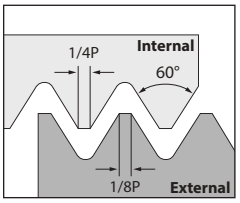

ISO
External

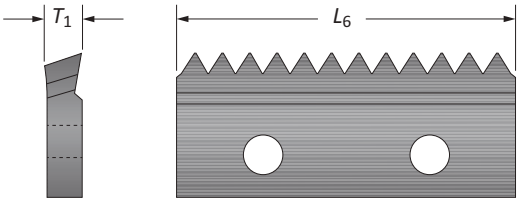

Pitch	Insert L_6 inch	Insert L_6 mm	Insert T_1 inch	Insert T_1 mm	Part No. ISO External
1.0	1.000	24.40	0.140	3.56	**TP100K-M1.0E**
1.5	1.000	25.40	0.140	3.56	**TP100K-M1.5E**
2.0	1.000	25.40	0.140	3.56	**TP100K-M2.0E**

E: 60 - 63
Key on E: 1
E: 37
E: 43

Inserts sold in quantities of 2

AccuThread® 856 Thread Mill Insert Holders

Bolt-in Style

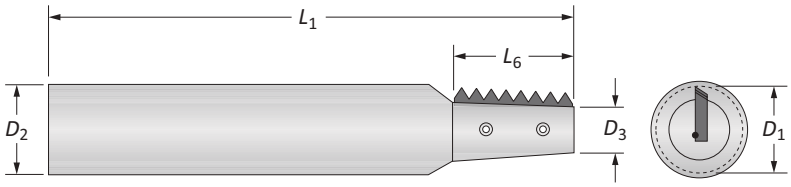

Tapered Insert Holders | NPT / NPTF / BSPT

	Holder									
	D_1	D_3	D_2	L_6	L_1	Flutes	Part No.	Inserts	Screw	Wrench
i	0.400	0.229	0.500	0.750	3.000	1	**THT-0400-1F075**	TP075K...	TMS-250	8T-8
	0.659	0.379	0.500	1.000	3.000	1	**THT-0659-1F100**	TP100K...	TMS-45	8T-9
m	10.16	5.82	13.00	19.05	76.20	1	**THT-0400-1F075M**	TP075K...	TMS-250	8T-8
	16.74	9.65	13.00	25.40	76.20	1	**THT-0659-1F100M**	TP100K...	TMS-45	8T-9

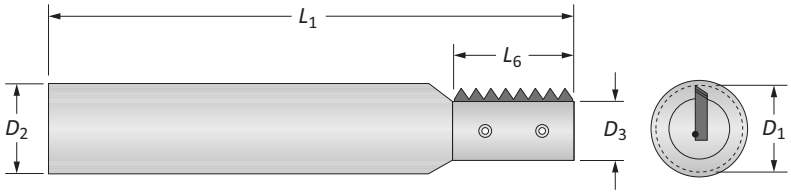

Straight Insert Holders | BSPP / UN / UNJ / ISO

	Holder									
	D_1	D_3	D_2	L_6	L_1	Flutes	Part No.	Inserts	Screw	Wrench
i	0.394	0.250	0.500	0.750	3.000	1	**THN-0394-1F075**	TP075K...	TMS-250	8T-8
	0.611	0.383	0.750	1.000	3.500	1	**THN-0611-1F100**	*SEE NOTE	TMS-40	8T-9
	0.625	0.454	0.750	1.000	3.500	1	**THN-0625-1F100**	TP100K...	TMS-40	8T-9
m	10.01	6.35	13.00	19.05	76.20	1	**THN-0394-1F075M**	TP075K...	TMS-250	8T-8
	15.88	11.58	25.00	25.40	88.90	1	**THN-0625-1F100M**	TP100K...	TMS-40	8T-9

*NOTE: Only UN/UNJ 10 TPI inserts can be used in this holder. Please refer to inserts on pages E: 38-39.

E: 37 E: 38 - 42

Key on E: 1

i = Imperial (in)
m = Metric (mm)

A DRILLING
B BORING
C REAMING
D BURNISHING
E THREADING
X SPECIALS

AccuThread® 856 Thread Mill Inserts

Pin Style | NPT / NPTF / BSPT

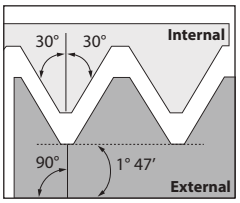

NPT
Internal / External

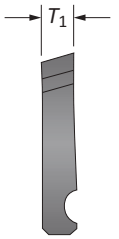

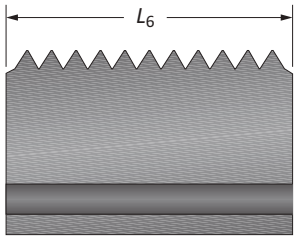

TPI (Pitch)	Insert L_6 inch	Insert L_6 mm	Insert T_1 inch	Insert T_1 mm	Part No. NPT Internal/External
11.5	1.500	38.10	0.140	3.56	**TN150K-NPT11.5**
8	1.500	38.10	0.140	3.56	**TN150K-NPT8**

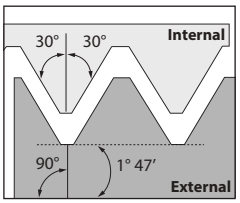

NPTF
Internal / External

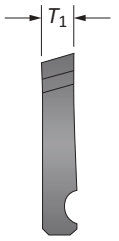

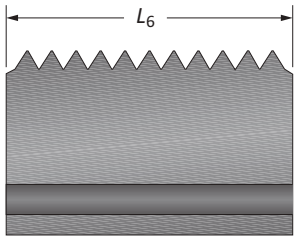

TPI (Pitch)	Insert L_6 inch	Insert L_6 mm	Insert T_1 inch	Insert T_1 mm	Part No. NPTF Internal/External
11.5	1.500	38.10	0.140	3.56	**TN150K-NPTF11.5**
8	1.500	38.10	0.140	3.56	**TN150K-NPTF8**

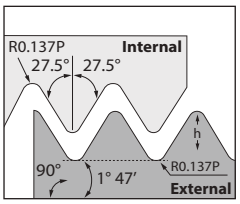

BSPT
Internal / External

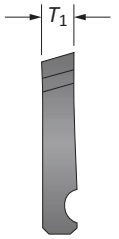

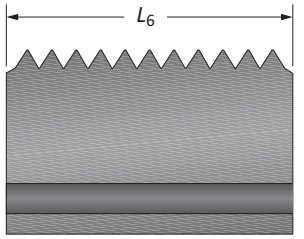

TPI (Pitch)	Insert L_6 inch	Insert L_6 mm	Insert T_1 inch	Insert T_1 mm	Part No. BSPT Internal/External
11	1.500	38.10	0.140	3.56	**TN150K-BSPT11**

E: 60 - 63
Key on E: 1

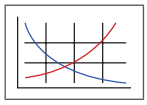

E: 37

E: 50 - 51

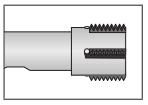

Inserts sold in quantities of 2

AccuThread® 856 Thread Mill Inserts

Pin Style | BSPP / API-ROUND / ACME

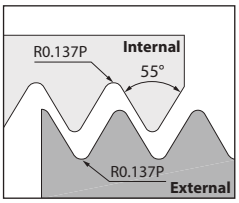

BSPP
Internal / External

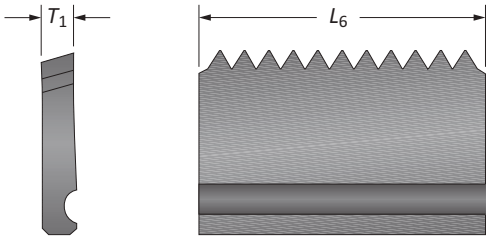

TPI (Pitch)	Insert L_6 inch	Insert L_6 mm	Insert T_1 inch	Insert T_1 mm	Part No. BSPP Internal/External
11	1.500	38.10	0.140	3.56	**TN150K-BSPP11**

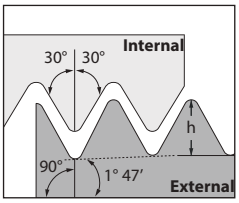

API-ROUND
Internal / External

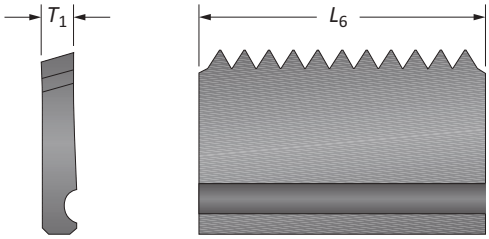

TPI (Pitch)	Insert L_6 inch	Insert L_6 mm	Insert T_1 inch	Insert T_1 mm	Part No. API-ROUND Internal/External
10	1.500	38.10	0.140	3.56	**TN150K-AP10**
8	1.500	38.10	0.140	3.56	**TN150K-AP8**

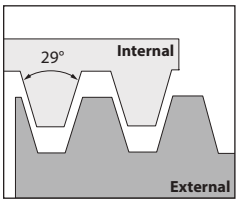

ACME
Full Profile

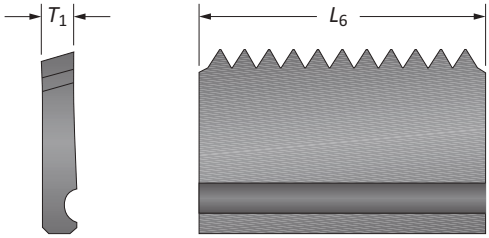

TPI (Pitch)	Insert L_6 inch	Insert L_6 mm	Insert T_1 inch	Insert T_1 mm	Part No. ACME Full Profile
12	1.000	25.40	0.140	3.56	**TN100K-FA12**
12	1.500	38.10	0.140	3.56	**TN150K-FA12**
10	1.000	25.40	0.140	3.56	**TN100K-FA10**
10	1.500	38.10	0.140	3.56	**TN150K-FA10**
8	1.000	25.40	0.140	3.56	**TN100K-FA8**
8	1.500	38.10	0.140	3.56	**TN150K-FA8**
6	1.500	38.10	0.140	3.56	**TN150K-FA6**
5	1.500	38.10	0.140	3.56	**TN150K-FA5**

E: 60 - 63
Key on E: 1
E: 37
E: 50 - 51

Inserts sold in quantities of 2

AccuThread® 856 Thread Mill Inserts

Pin Style | UN

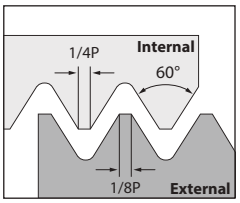

UN
Internal

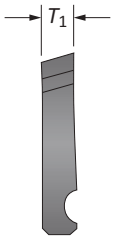

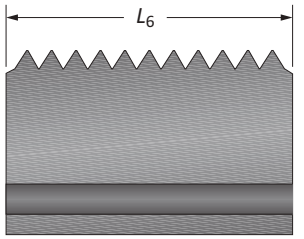

TPI (Pitch)	Insert L_6 inch	Insert L_6 mm	Insert T_1 inch	Insert T_1 mm	Part No. UN Internal
32	1.000	25.40	0.140	3.56	**TN100K-UN32I**
24	1.000	25.40	0.140	3.56	**TN100K-UN24I**
24	1.500	38.10	0.140	3.56	**TN150K-UN24I**
20	1.000	25.40	0.140	3.56	**TN100K-UN20I**
20	1.500	38.10	0.140	3.56	**TN150K-UN20I**
18	1.000	25.40	0.140	3.56	**TN100K-UN18I**
18	1.500	38.10	0.140	3.56	**TN150K-UN18I**
16	1.000	25.40	0.140	3.56	**TN100K-UN16I**
16	1.500	38.10	0.140	3.56	**TN150K-UN16I**
14	1.500	38.10	0.140	3.56	**TN150K-UN14I**
12	1.000	25.40	0.140	3.56	**TN100K-UN12I**
12	1.500	38.10	0.140	3.56	**TN150K-UN12I**
10	1.000	25.40	0.140	3.56	**TN100K-UN10I**
10	1.500	38.10	0.140	3.56	**TN150K-UN10I**
8	1.000	25.40	0.140	3.56	**TN100K-UN8I**
8	1.500	38.10	0.140	3.56	**TN150K-UN8I**
7	1.000	25.40	0.140	3.56	**TN100K-UN7I**
7	1.500	38.10	0.140	3.56	**TN150K-UN7I**
6	1.500	38.10	0.140	3.56	**TN150K-UN6I**

E: 60 - 63
Key on E: 1
E: 37
E: 50 - 51

Inserts sold in quantities of 2

AccuThread® 856 Thread Mill Inserts

Pin Style | UN

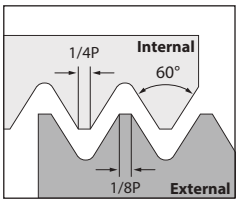

UN
External

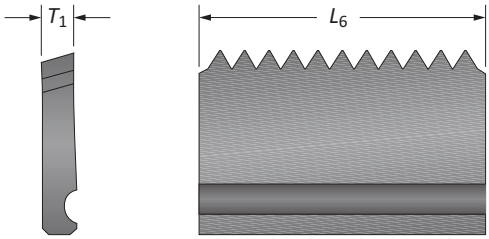

TPI (Pitch)	Insert L_6 inch	Insert L_6 mm	Insert T_1 inch	Insert T_1 mm	Part No. UN External
32	1.000	25.40	0.140	3.56	**TN100K-UN32E**
24	1.000	25.40	0.140	3.56	**TN100K-UN24E**
20	1.000	25.40	0.140	3.56	**TN100K-UN20E**
20	1.500	38.10	0.140	3.56	**TN150K-UN20E**
18	1.000	25.40	0.140	3.56	**TN100K-UN18E**
18	1.500	38.10	0.140	3.56	**TN150K-UN18E**
16	1.000	25.40	0.140	3.56	**TN100K-UN16E**
16	1.500	38.10	0.140	3.56	**TN150K-UN16E**
12	1.000	25.40	0.140	3.56	**TN100K-UN12E**
12	1.500	38.10	0.140	3.56	**TN150K-UN12E**
10	1.000	25.40	0.140	3.56	**TN100K-UN10E**
10	1.500	38.10	0.140	3.56	**TN150K-UN10E**
8	1.000	25.40	0.140	3.56	**TN100K-UN8E**
8	1.500	38.10	0.140	3.56	**TN150K-UN8E**
6	1.500	38.10	0.140	3.56	**TN150K-UN6E**

E: 60 - 63
Key on E: 1
E: 37
E: 50 - 51

Inserts sold in quantities of 2

A DRILLING
B BORING
C REAMING
D BURNISHING
E THREADING
X SPECIALS

AccuThread® 856 Thread Mill Inserts

Pin Style | UNJ

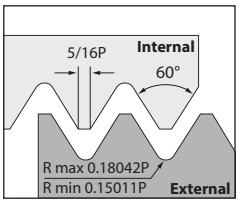

UNJ
Internal

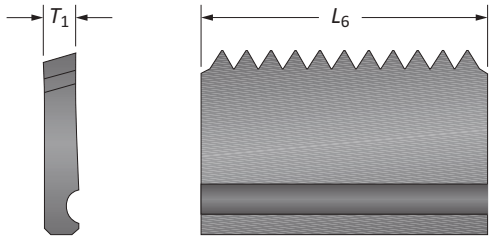

TPI (Pitch)	Insert L_6 inch	Insert L_6 mm	Insert T_1 inch	Insert T_1 mm	Part No. UNJ Internal
32	1.000	25.40	0.140	3.56	**TN100K-UNJ32I**
24	1.000	25.40	0.140	3.56	**TN100K-UNJ24I**
24	1.500	38.10	0.140	3.56	**TN150K-UNJ24I**
20	1.000	25.40	0.140	3.56	**TN100K-UNJ20I**
20	1.500	38.10	0.140	3.56	**TN150K-UNJ20I**
18	1.000	25.40	0.140	3.56	**TN100K-UNJ18I**
18	1.500	38.10	0.140	3.56	**TN150K-UNJ18I**
16	1.000	25.40	0.140	3.56	**TN100K-UNJ16I**
16	1.500	38.10	0.140	3.56	**TN150K-UNJ16I**
12	1.000	25.40	0.140	3.56	**TN100K-UNJ12I**
12	1.500	38.10	0.140	3.56	**TN150K-UNJ12I**
8	1.500	38.10	0.140	3.56	**TN150K-UNJ8I**

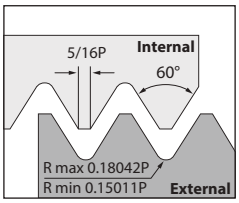

UNJ
External

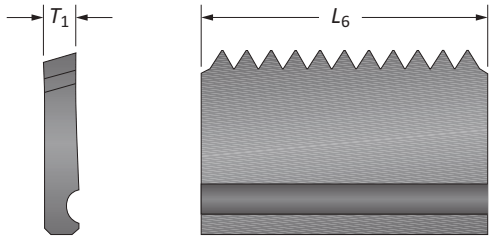

TPI (Pitch)	Insert L_6 inch	Insert L_6 mm	Insert T_1 inch	Insert T_1 mm	Part No. UNJ External
32	1.000	25.40	0.140	3.56	**TN100K-UNJ32E**
24	1.000	25.40	0.140	3.56	**TN100K-UNJ24E**
24	1.500	38.10	0.140	3.56	**TN150K-UNJ24E**
20	1.000	25.40	0.140	3.56	**TN100K-UNJ20E**
20	1.500	38.10	0.140	3.56	**TN150K-UNJ20E**
18	1.000	25.40	0.140	3.56	**TN100K-UNJ18E**
18	1.500	38.10	0.140	3.56	**TN150K-UNJ18E**
16	1.000	25.40	0.140	3.56	**TN100K-UNJ16E**
16	1.500	38.10	0.140	3.56	**TN150K-UNJ16E**
12	1.000	25.40	0.140	3.56	**TN100K-UNJ12E**
12	1.500	38.10	0.140	3.56	**TN150K-UNJ12E**
8	1.500	38.10	0.140	3.56	**TN150K-UNJ8E**

E: 60 - 63
Key on E: 1
E: 37
E: 50 - 51

Inserts sold in quantities of 2

AccuThread® 856 Thread Mill Inserts

Pin Style | ISO

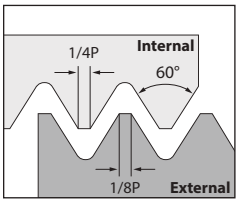

ISO
Internal

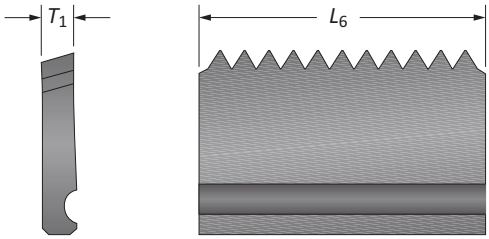

Pitch	Insert L_6 inch	Insert L_6 mm	Insert T_1 inch	Insert T_1 mm	Part No. ISO Internal
1.5	1.500	38.10	0.140	3.56	**TN150K-M1.5I**
2.0	1.500	38.10	0.140	3.56	**TN150K-M2.0I**
2.5	1.500	38.10	0.140	3.56	**TN150K-M2.5I**
3.0	1.500	38.10	0.140	3.56	**TN150K-M3.0I**
3.5	1.500	38.10	0.140	3.56	**TN150K-M3.5I**
4.0	1.500	38.10	0.140	3.56	**TN150K-M4.0I**
4.5	1.500	38.10	0.140	3.56	**TN150K-M4.5I**
5.0	1.500	38.10	0.140	3.56	**TN150K-M5.0I**
6.0	1.500	38.10	0.140	3.56	**TN150K-M6.0I**

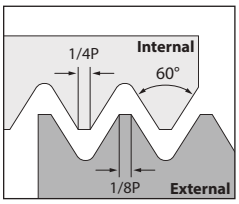

ISO
External

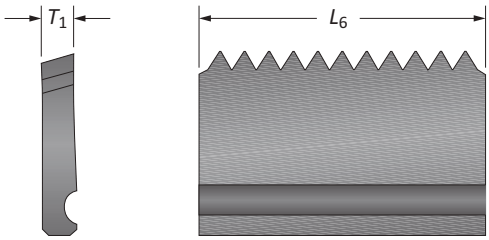

Pitch	Insert L_6 inch	Insert L_6 mm	Insert T_1 inch	Insert T_1 mm	Part No. ISO External
2.0	1.500	38.10	0.140	3.56	**TN150K-M2.0E**
4.0	1.500	38.10	0.140	3.56	**TN150K-M4.0E**
4.5	1.500	38.10	0.140	3.56	**TN150K-M4.5E**
5.0	1.500	38.10	0.140	3.56	**TN150K-M5.0E**
6.0	1.500	38.10	0.140	3.56	**TN150K-M6.0E**

E: 60 - 63
Key on E: 1
E: 37
E: 50 - 51

Inserts sold in quantities of 2

A DRILLING
B BORING
C REAMING
D BURNISHING
E THREADING
X SPECIALS

AccuThread® Pin Style Holders

Weldon Shank

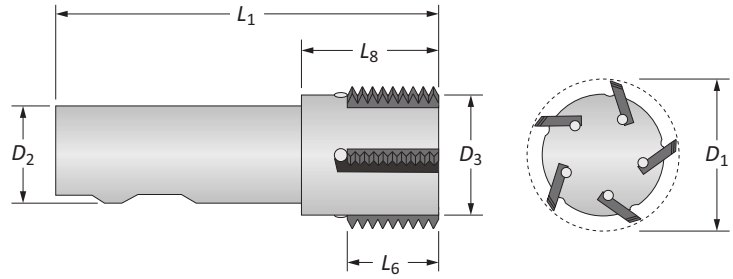

Positive Rake

	D_1		Holder											
	Standard	Oversize*	D_3	L_8	L_6	L_1	D_2	Coolant	Flutes	Part No.	Inserts	Screw	Key Size	Pin
i	0.969	–	0.750	1.38	1.000	4.500	1.000	N	2	**THP-0969-2F100**	TN100K...	TMSS-3	3/32	TMP-1
	1.755	–	1.500	2.25	1.000	4.000	1.250	Y	5	**THP-1755-5F100**	TN100K...	TMSS-2	3/32	TMP-1
	0.932	1.063	0.722	1.90	1.500	4.500	1.000	N	1	**THP-0932-1F150**	TN150K...	TMSS-2	3/32	TMP-2
	0.969	1.100	0.750	2.00	1.500	4.500	1.000	N	2	**THP-0969-2F150**	TN150K...	TMSS-3	3/32	TMP-2
	1.116	1.247	0.812	2.00	1.500	4.500	1.000	Y	3	**THP-1116-3F150**	TN150K...	TMSS-3	3/32	TMP-2
	1.755	1.887	1.500	2.25	1.500	4.500	1.250	Y	5	**THP-1755-5F150**	TN150K...	TMSS-2	3/32	TMP-2
m	24.61	–	19.05	35.05	25.40	114.30	25.00	N	2	**THP-0969-2F100M**	TN100K...	TMSS-3	3/32	TMP-1
	44.58	–	38.10	57.15	25.40	101.60	32.00	Y	5	**THP-1755-5F100M**	TN100K...	TMSS-2	3/32	TMP-1
	23.67	27.00	18.34	48.44	38.10	114.30	25.00	N	1	**THP-0932-1F150M**	TN150K...	TMSS-2	3/32	TMP-2
	24.61	27.94	19.05	50.80	38.10	114.30	25.00	N	2	**THP-0969-2F150M**	TN150K...	TMSS-3	3/32	TMP-2
	28.35	31.67	20.63	50.80	38.10	114.30	25.00	Y	3	**THP-1116-3F150M**	TN150K...	TMSS-3	3/32	TMP-2
	44.58	47.93	38.10	57.15	38.10	114.30	32.00	Y	5	**THP-1755-5F150M**	TN150K...	TMSS-2	3/32	TMP-2

*See note at bottom of page.

Neutral Rake

	D_1		Holder											
	Standard	Oversize*	D_3	L_8	L_6	L_1	D_2	Coolant	Flutes	Part No.	Inserts	Screw	Key Size	Pin
i	1.116	1.247	0.812	2.00	1.500	4.500	1.000	Y	3	**TNR-1116-3F150**	TN150K...	TMSS-3	3/32	TMP-2
	1.755	1.887	1.500	2.25	1.500	4.531	1.250	Y	5	**TNR-1755-5F150**	TN150K...	TMSS-2	3/32	TMP-2
m	28.35	31.67	20.63	50.80	38.10	114.30	25.00	Y	3	**TNR-1116-3F150M**	TN150K...	TMSS-3	3/32	TMP-2
	44.58	47.93	38.10	57.15	38.10	114.30	32.00	Y	5	**TNR-1755-5F150M**	TN150K...	TMSS-2	3/32	TMP-2

*See note at bottom of page.

E: 37
Key on E: 1

E: 44 - 49

*Oversized cutter diameter occurs when assembled with the following pin style inserts:

NPT 8 NPTF 11.5 NPTF 8	API 8	Metric 6.0 Metric 5.0 Metric 4.5	ACME 5 ACME 6

i = Imperial (in)
m = Metric (mm)

AccuThread® Pin Style Holders

Shell Mill

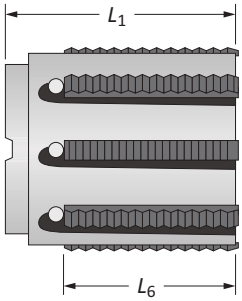

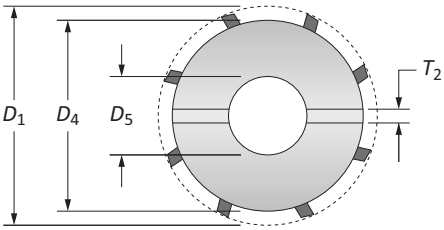

Positive Rake

	D_1		Holder										
	Standard	Oversize*	D_4	D_5	L_6	L_1	T_2	Flutes	Part No.	Inserts	Screw	Key Size	Pin
i	2.714	2.845	2.500	1.000	1.500	2.250	0.375	7	**TSN-2846-7F150**	TN150K...	TMSS-2	3/32	TMP-2
	3.208	3.340	3.000	1.250	1.500	2.250	0.500	8	**TSN-3341-8F150**	TN150K...	TMSS-2	3/32	TMP-2
m	68.94	72.26	63.50	27.00	38.10	57.15	12	7	**TSN-2846-7F150M**	TN150K...	TMSS-2	3/32	TMP-2
	81.48	84.84	76.20	32.00	38.10	57.15	14	8	**TSN-3341-8F150M**	TN150K...	TMSS-2	3/32	TMP-2

*See note at bottom of page.

Neutral Rake

	D_1		Holder										
	Standard	Oversize*	D_4	D_5	L_6	L_1	T_2	Flutes	Part No.	Inserts	Screw	Key Size	Pin
i	2.217	2.349	2.000	0.750	1.500	2.250	0.312	6	**TSR-2217-6F150**	TN150K...	TMSS-2	3/32	TMP-2
m	56.31	59.66	50.80	22.00	38.10	57.15	10.00	6	**TSR-2217-6F150M**	TN150K...	TMSS-2	3/32	TMP-2

*See note at bottom of page.

*Oversized cutter diameter occurs when assembled with the following pin style inserts:

NPT 8 NPTF 11.5 NPTF 8	API 8	Metric 6.0 Metric 5.0 Metric 4.5	ACME 5 ACME 6

E: 37
Key on E: 1
E: 44 - 49

i = Imperial (in)
m = Metric (mm)

Thread Mill Pre-Drill Information

Formula	Metric	Imperial
Velocity	m/min = RPM • 0.003 • Cutter Diameter	SFM = RPM • 0.262 • Cutter Diameter
Speed	$RPM = \frac{(m/min \bullet 318.47)}{\text{Cutter Diameter}}$	$RPM = \frac{(SFM \bullet 3.82)}{\text{Cutter Diameter}}$
Linear Feed Rate (LFR)	mm/min = RPM • (mm/tooth • Number of Flutes)	IPM = RPM • (IPT • Number of Flutes)
Adjusted Feed Rate (AFR) ***See Note Below***	$AFR = \left(\frac{(\text{Major Diameter - Cutter Diameter})}{\text{Major Diameter}}\right) \bullet LFR$	

NOTE: The above formula on an internal thread program adjusts the linear feed rate to be applied to the outer diameter instead of the center of the cutting tool. If the feed rate is not adjusted, the excessive feed rate will cause the thread mill cutting edges to fail.

Example of an Internal Adjusted Feed Rate Calculation:

Free machining steel at 125 BHN with a M16x2 2B thread using ThreadMills USA™ solid carbide thread mill (TM16200) running at 221 m/min and 0.038 mm/tooth

STEP 1:	$RPM = \frac{(m/min \bullet 318.47)}{\text{Cutter Diameter}}$	$RPM = \frac{(221 \bullet 318.47)}{11.94}$	RPM = 5895
STEP 2:	LFR = RPM • (mm/tooth • Number of flutes)	LFR = 5895 • (0.038 • 4)	LFR = 896.04 mm/min
STEP 3:	$AFR = \left(\frac{(\text{Major Diameter - Cutter Diameter})}{\text{Major Diameter}}\right) \bullet LFR$	$AFR = \left(\frac{(16.00 - 11.94)}{16.00}\right) \bullet 896.04$	AFR = 227.37 mm/min

Unit Definitions

Velocity	**m/min** = meters per minute **SFM** = surface feet per minute
Speed	**RPM** = revolutions per minute
Feed	**mm/rev** = millimeters per revolution **mm/tooth** = millimeters per tooth *also known as* millimeters per flute **IPR** = inch per revolution **IPT** = inch per tooth *also known as* inch per flute **mm/min** = millimeters per minute **IPM** = inches per minute

Thread Mill Calculations and Recommended Passes

Thread Mill Drill Calculation

Based on nominal tap drill diameter. Based on 0.003" or 0.075 mm probable mean oversize.

To calculate the percent of full thread for a given hole diameter:

IMPERIAL:

$$\text{\% of thread} = \text{\# of threads per inch} \bullet \frac{\text{Basic major diameter of thread - Drill hole size}}{0.0130}$$

METRIC:

$$\text{\% of thread} = \frac{76.96}{\text{Pitch (mm)}} \bullet [\text{ Basic major diameter of thread - Drill hole size }]$$

Major Thread Diameter for # Drills

Drill #	Thread Diameter
# 2	0.086
# 3	0.099
# 4	0.112
# 5	0.125
# 6	0.132
# 8	0.164
# 10	0.190
# 12	0.216

Recommended Passes

NPT / NPTF / BSPT / API			
	Machinability		
Pitch Size	Easy	Average	Difficult
28	1	1	2
27	1	1	2
19	1	1	2
18	1	1	2
14	1	2	3
11.5	1	2	3
11	1	2	3
10	1	2	3
8	2	3	4

ISO			
	Machinability		
Pitch Size	Easy	Average	Difficult
0.40	1	1	2
0.45	1	1	2
0.50	1	1	2
0.70	1	1	2
0.75	1	1	2
0.80	1	1	2
1.00	1	1	2
1.25	1	2	3
1.50	1	2	3
1.75	1	2	3
2.00	1	2	3
2.50	2	3	4
3.00	2	3	4
3.50	2	3	4
4.00	2	3	4
4.50	2	3	4
5.00	2	3	4
6.00	2	3	4

UN / UNJ / BSPP / BSW / NPS / NPSF			
	Machinability		
Pitch Size	Easy	Average	Difficult
64	1	1	2
56	1	1	2
48	1	1	2
44	1	1	2
40	1	1	2
36	1	1	2
32	1	1	2
28	1	1	2
24	1	1	2
20	1	2	3
19	1	2	3
18	1	2	3
16	1	2	3
14	1	2	3
13	1	2	3
12	1	2	3
11	2	2	4
10	2	3	4
9	2	3	4
8	2	3	4
7	2	3	4
6	2	3	4

- 1 Pass
- 2 Passes
- 3 Passes
- 4 Passes

Recommended Cutting Data | Imperial (inch)

Solid Carbide | AccuThread® 856

ISO	Material	Hardness (BHN)	Machinability*	Speed (SFM)	Recommended Feed (inch/tooth) by Cutter Diameter							
					0.060" to 0.125"	0.126" to 0.188"	0.189" to 0.250"	0.251" to 0.312"	0.313" to 0.375"	0.376" to 0.500"	0.501" to 0.625"	0.626" to 0.750"
P	**Free-Machining Steel** 1118, 1215, 12L14, etc.	100 - 150	Easy	900	0.0004	0.0005	0.0007	0.0009	0.0010	0.0015	0.0020	0.0025
		150 - 200	Easy	700	0.0004	0.0005	0.0007	0.0009	0.0010	0.0015	0.0020	0.0025
		200 - 250	Easy	500	0.0004	0.0005	0.0007	0.0009	0.0010	0.0015	0.0020	0.0025
	Low-Carbon Steel 1010, 1020, 1025, 1522, 1144	85 - 125	Average	900	0.0004	0.0005	0.0007	0.0009	0.0010	0.0015	0.0020	0.0025
		125 - 175	Average	700	0.0004	0.0005	0.0007	0.0009	0.0010	0.0015	0.0020	0.0025
		175 - 225	Average	600	0.0004	0.0005	0.0007	0.0009	0.0010	0.0015	0.0020	0.0025
		225 - 275	Average	500	0.0004	0.0005	0.0007	0.0009	0.0010	0.0015	0.0020	0.0025
	Medium-Carbon Steel 1010, 1040, 1050, 1527, 1140	125 - 175	Average	575	0.0004	0.0005	0.0006	0.0008	0.0010	0.0013	0.0018	0.0020
		175 - 225	Average	500	0.0004	0.0005	0.0006	0.0008	0.0010	0.0013	0.0018	0.0020
		225 - 275	Average	450	0.0004	0.0005	0.0006	0.0008	0.0010	0.0013	0.0018	0.0020
		275 - 325	Average	400	0.0004	0.0005	0.0006	0.0008	0.0010	0.0013	0.0018	0.0020
	Alloy Steel 4140, 5140, 8640	125 - 175	Average	575	0.0004	0.0005	0.0006	0.0008	0.0010	0.0013	0.0018	0.0020
		175 - 225	Average	500	0.0004	0.0005	0.0006	0.0008	0.0010	0.0013	0.0018	0.0020
		225 - 275	Average	450	0.0004	0.0005	0.0006	0.0008	0.0010	0.0013	0.0018	0.0020
		275 - 325	Difficult	400	0.0004	0.0005	0.0006	0.0008	0.0010	0.0013	0.0018	0.0020
		325 - 375	Difficult	375	0.0004	0.0005	0.0006	0.0008	0.0010	0.0013	0.0018	0.0020
	High-Strength Alloy 4340, 4330V, 300M	225 - 300	Average	450	0.0004	0.0005	0.0006	0.0008	0.0010	0.0013	0.0018	0.0020
		300 - 350	Difficult	400	0.0004	0.0005	0.0006	0.0008	0.0010	0.0013	0.0018	0.0020
		350 - 400	Difficult	350	0.0004	0.0005	0.0006	0.0008	0.0010	0.0013	0.0018	0.0020
	Structural Steel A36, A285, A516	100 - 150	Average	600	0.0004	0.0005	0.0007	0.0009	0.0010	0.0015	0.0020	0.0025
		150 - 250	Average	500	0.0004	0.0005	0.0007	0.0009	0.0010	0.0015	0.0020	0.0025
		250 - 350	Difficult	450	0.0004	0.0005	0.0007	0.0009	0.0010	0.0015	0.0020	0.0025
S	**High-Temp Alloy** Hastelloy B, Inconel 600	140 - 220	Difficult	120	0.0003	0.0004	0.0006	0.0008	0.0009	0.0010	0.0012	0.0015
		220 - 310	Difficult	90	0.0003	0.0004	0.0006	0.0008	0.0009	0.0010	0.0012	0.0015
M	**Stainless Steel** 303, 416, 420	135 - 185	Difficult	525	0.0004	0.0005	0.0006	0.0008	0.0009	0.0010	0.0015	0.0020
		185 - 275	Difficult	500	0.0004	0.0005	0.0006	0.0008	0.0009	0.0010	0.0015	0.0020
	Stainless Steel PH 17-4	185 - 275	Difficult	300	0.0004	0.0005	0.0006	0.0008	0.0009	0.0010	0.0015	0.0020
		275 - 325	Difficult	150	0.0004	0.0005	0.0006	0.0008	0.0009	0.0010	0.0015	0.0020
	Tool Steel H-13, H21, A-4	150 - 200	Difficult	575	0.0004	0.0005	0.0007	0.0009	0.0010	0.0015	0.0020	0.0025
		200 - 250	Difficult	500	0.0004	0.0005	0.0007	0.0009	0.0010	0.0015	0.0020	0.0025
K	**Cast Iron** Grey, Ductile, Nodular	120 - 150	Easy	675	0.0004	0.0005	0.0007	0.0009	0.0010	0.0015	0.0020	0.0025
		150 - 200	Easy	625	0.0004	0.0005	0.0007	0.0009	0.0010	0.0015	0.0020	0.0025
		200 - 220	Easy	575	0.0004	0.0005	0.0007	0.0009	0.0010	0.0015	0.0020	0.0025
		220 - 260	Average	500	0.0004	0.0005	0.0007	0.0009	0.0010	0.0015	0.0020	0.0025
		260 - 320	Average	475	0.0004	0.0005	0.0007	0.0009	0.0010	0.0015	0.0020	0.0025
N	**Wrought Aluminum** 6061 T6	30	Easy	1100	0.0005	0.0006	0.0009	0.0010	0.0015	0.0020	0.0025	0.0030
		180	Easy	1000	0.0005	0.0006	0.0009	0.0010	0.0015	0.0020	0.0025	0.0030
	Cast Aluminum** up to 10% silicon	120	Easy	625	0.0005	0.0006	0.0009	0.0010	0.0015	0.0020	0.0025	0.0030
	Brass	30 - 125	Easy	1100	0.0005	0.0006	0.0009	0.0010	0.0015	0.0020	0.0025	0.0030

NOTICE: Reduce feed and speed by 30% for tapered thread forms due to additional material removal.
*Refer to recommended pass chart on page E: 53 when referencing material machinability.
**Uncoated thread mills are recommended for cast aluminum applications

Recommended Cutting Data | Metric (mm)

Solid Carbide | AccuThread® 856

ISO	Material	Hardness (BHN)	Machinability*	Speed (m/min)	Recommended Feed (mm/tooth) by Cutter Diameter							
					1.50 mm - 3.18 mm	3.19 mm - 4.76 mm	4.77 mm - 6.35 mm	6.36 mm - 7.94 mm	7.95 mm - 9.53 mm	9.54 mm - 12.70 mm	12.71 mm - 15.88 mm	15.89 mm - 19.05 mm
P	**Free-Machining Steel**	100 - 150	Easy	274	0.010	0.013	0.018	0.023	0.025	0.038	0.051	0.064
	1118, 1215, 12L14, etc.	150 - 200	Easy	213	0.010	0.013	0.018	0.023	0.025	0.038	0.051	0.064
		200 - 250	Easy	152	0.010	0.013	0.018	0.023	0.025	0.038	0.051	0.064
	Low-Carbon Steel	85 - 125	Average	274	0.010	0.013	0.018	0.023	0.025	0.038	0.051	0.064
	1010, 1020, 1025, 1522, 1144	125 - 175	Average	213	0.010	0.013	0.018	0.023	0.025	0.038	0.051	0.064
		175 - 225	Average	183	0.010	0.013	0.018	0.023	0.025	0.038	0.051	0.064
		225 - 275	Average	152	0.010	0.013	0.018	0.023	0.025	0.038	0.051	0.064
	Medium-Carbon Steel	125 - 175	Average	175	0.010	0.013	0.015	0.020	0.025	0.033	0.046	0.051
	1010, 1040, 1050, 1527, 1140	175 - 225	Average	152	0.010	0.013	0.015	0.020	0.025	0.033	0.046	0.051
		225 - 275	Average	137	0.010	0.013	0.015	0.020	0.025	0.033	0.046	0.051
		275 - 325	Average	122	0.010	0.013	0.015	0.020	0.025	0.033	0.046	0.051
	Alloy Steel	125 - 175	Average	175	0.010	0.013	0.015	0.020	0.025	0.033	0.046	0.051
	4140, 5140, 8640	175 - 225	Average	152	0.010	0.013	0.015	0.020	0.025	0.033	0.046	0.051
		225 - 275	Average	137	0.010	0.013	0.015	0.020	0.025	0.033	0.046	0.051
		275 - 325	Difficult	122	0.010	0.013	0.015	0.020	0.025	0.033	0.046	0.051
		325 - 375	Difficult	114	0.010	0.013	0.015	0.020	0.025	0.033	0.046	0.051
	High-Strength Alloy	225 - 300	Average	137	0.010	0.013	0.015	0.020	0.025	0.033	0.046	0.051
	4340, 4330V, 300M	300 - 350	Difficult	122	0.010	0.013	0.015	0.020	0.025	0.033	0.046	0.051
		350 - 400	Difficult	107	0.010	0.013	0.015	0.020	0.025	0.033	0.046	0.051
	Structural Steel	100 - 150	Average	183	0.010	0.013	0.018	0.023	0.025	0.038	0.051	0.064
	A36, A285, A516	150 - 250	Average	152	0.010	0.013	0.018	0.023	0.025	0.038	0.051	0.064
		250 - 350	Difficult	137	0.010	0.013	0.018	0.023	0.025	0.038	0.051	0.064
S	**High-Temp Alloy**	140 - 220	Difficult	37	0.008	0.010	0.015	0.020	0.023	0.025	0.030	0.038
	Hastelloy B, Inconel 600	220 - 310	Difficult	27	0.008	0.010	0.015	0.020	0.023	0.025	0.030	0.038
M	**Stainless Steel**	135 - 185	Difficult	160	0.010	0.013	0.015	0.020	0.023	0.025	0.038	0.051
	303, 416, 420	185 - 275	Difficult	152	0.010	0.013	0.015	0.020	0.023	0.025	0.038	0.051
	Stainless Steel PH	185 - 275	Difficult	91	0.010	0.013	0.015	0.020	0.023	0.025	0.038	0.051
	17-4	275 - 325	Difficult	46	0.010	0.013	0.015	0.020	0.023	0.025	0.038	0.051
	Tool Steel	150 - 200	Difficult	175	0.010	0.013	0.018	0.023	0.025	0.038	0.051	0.064
	H-13, H21, A-4	200 - 250	Difficult	152	0.010	0.013	0.018	0.023	0.025	0.038	0.051	0.064
K	**Cast Iron**	120 - 150	Easy	206	0.010	0.013	0.018	0.023	0.025	0.038	0.051	0.064
	Grey, Ductile, Nodular	150 - 200	Easy	191	0.010	0.013	0.018	0.023	0.025	0.038	0.051	0.064
		200 - 220	Easy	175	0.010	0.013	0.018	0.023	0.025	0.038	0.051	0.064
		220 - 260	Average	152	0.010	0.013	0.018	0.023	0.025	0.038	0.051	0.064
		260 - 320	Average	145	0.010	0.013	0.018	0.023	0.025	0.038	0.051	0.064
N	**Wrought Aluminum**	30	Easy	335	0.013	0.015	0.023	0.025	0.038	0.051	0.064	0.076
	6061 T6	180	Easy	305	0.013	0.015	0.023	0.025	0.038	0.051	0.064	0.076
	Cast Aluminum** up to 10% silicon	120	Easy	191	0.013	0.015	0.023	0.025	0.038	0.051	0.064	0.076
	Brass	30 - 125	Easy	335	0.013	0.015	0.023	0.025	0.038	0.051	0.064	0.076

NOTICE: Reduce feed and speed by 30% for tapered thread forms due to additional material removal.
*Refer to recommended pass chart on page E: 53 when referencing material machinability.
**Uncoated thread mills are recommended for cast aluminum applications

Recommended Cutting Data | Imperial (inch)

Solid Carbide | ThreadMills USA™

ISO	Material	Hardness (BHN)	Machinability*	Speed (SFM)	Recommended Feed (inch/tooth) by Cutter Diameter							
					0.060" - 0.125"	0.126" - 0.188"	0.189" - 0.250"	0.251" - 0.312"	0.313" - 0.375"	0.376" - 0.500"	0.501" - 0.625"	0.626" - 0.750"
P	**Free-Machining Steel**	100 - 150	Easy	725	0.0004	0.0005	0.0007	0.0009	0.0010	0.0015	0.0020	0.0025
	1118, 1215, 12L14, etc.	150 - 200	Easy	550	0.0004	0.0005	0.0007	0.0009	0.0010	0.0015	0.0020	0.0025
		200 - 250	Easy	450	0.0004	0.0005	0.0007	0.0009	0.0010	0.0015	0.0020	0.0025
	Low-Carbon Steel	85 - 125	Average	725	0.0004	0.0005	0.0007	0.0009	0.0010	0.0015	0.0020	0.0025
	1010, 1020, 1025, 1522, 1144	125 - 175	Average	550	0.0004	0.0005	0.0007	0.0009	0.0010	0.0015	0.0020	0.0025
		175 - 225	Average	450	0.0004	0.0005	0.0007	0.0009	0.0010	0.0015	0.0020	0.0025
		225 - 275	Average	400	0.0004	0.0005	0.0007	0.0009	0.0010	0.0015	0.0020	0.0025
	Medium-Carbon Steel	125 - 175	Average	450	0.0004	0.0005	0.0006	0.0008	0.0010	0.0013	0.0018	0.0020
	1010, 1040, 1050, 1527, 1140	175 - 225	Average	400	0.0004	0.0005	0.0006	0.0008	0.0010	0.0013	0.0018	0.0020
		225 - 275	Average	350	0.0004	0.0005	0.0006	0.0008	0.0010	0.0013	0.0018	0.0020
		275 - 325	Average	300	0.0004	0.0005	0.0006	0.0008	0.0010	0.0013	0.0018	0.0020
	Alloy Steel	125 - 175	Average	450	0.0004	0.0005	0.0006	0.0008	0.0010	0.0013	0.0018	0.0020
	4140, 5140, 8640	175 - 225	Average	400	0.0004	0.0005	0.0006	0.0008	0.0010	0.0013	0.0018	0.0020
		225 - 275	Average	350	0.0004	0.0005	0.0006	0.0008	0.0010	0.0013	0.0018	0.0020
		275 - 325	Difficult	300	0.0004	0.0005	0.0006	0.0008	0.0010	0.0013	0.0018	0.0020
		325 - 375	Difficult	250	0.0004	0.0005	0.0006	0.0008	0.0010	0.0013	0.0018	0.0020
	High-Strength Alloy	225 - 300	Average	350	0.0004	0.0005	0.0006	0.0008	0.0010	0.0013	0.0018	0.0020
	4340, 4330V, 300M	300 - 350	Difficult	300	0.0004	0.0005	0.0006	0.0008	0.0010	0.0013	0.0018	0.0020
		350 - 400	Difficult	250	0.0004	0.0005	0.0006	0.0008	0.0010	0.0013	0.0018	0.0020
	Structural Steel	100 - 150	Average	450	0.0004	0.0005	0.0007	0.0009	0.0010	0.0015	0.0020	0.0025
	A36, A285, A516	150 - 250	Average	400	0.0004	0.0005	0.0007	0.0009	0.0010	0.0015	0.0020	0.0025
		250 - 350	Difficult	300	0.0004	0.0005	0.0007	0.0009	0.0010	0.0015	0.0020	0.0025
S	**High-Temp Alloy**	140 - 220	Difficult	100	0.0003	0.0004	0.0006	0.0008	0.0009	0.0010	0.0012	0.0015
	Hastelloy B, Inconel 600	220 - 310	Difficult	75	0.0003	0.0004	0.0006	0.0008	0.0009	0.0010	0.0012	0.0015
M	**Stainless Steel**	135 - 185	Difficult	425	0.0004	0.0005	0.0006	0.0008	0.0009	0.0010	0.0015	0.0020
	303, 416, 420	185 - 275	Difficult	400	0.0004	0.0005	0.0006	0.0008	0.0009	0.0010	0.0015	0.0020
	Stainless Steel PH	185 - 275	Difficult	250	0.0004	0.0005	0.0006	0.0008	0.0009	0.0010	0.0015	0.0020
	17-4	275 - 325	Difficult	125	0.0004	0.0005	0.0006	0.0008	0.0009	0.0010	0.0015	0.0020
	Tool Steel	150 - 200	Difficult	325	0.0004	0.0005	0.0007	0.0008	0.0010	0.0015	0.0020	0.0025
	H-13, H21, A-4	200 - 250	Difficult	225	0.0004	0.0005	0.0007	0.0008	0.0010	0.0015	0.0020	0.0025
K	**Cast Iron**	120 - 150	Easy	550	0.0004	0.0005	0.0007	0.0009	0.0010	0.0015	0.0020	0.0025
	Grey, Ductile, Nodular	150 - 200	Easy	500	0.0004	0.0005	0.0007	0.0009	0.0010	0.0015	0.0020	0.0025
		200 - 220	Easy	450	0.0004	0.0005	0.0007	0.0009	0.0010	0.0015	0.0020	0.0025
		220 - 260	Average	400	0.0004	0.0005	0.0007	0.0009	0.0010	0.0015	0.0020	0.0025
		260 - 320	Average	375	0.0004	0.0005	0.0007	0.0009	0.0010	0.0015	0.0020	0.0025
N	**Wrought Aluminum**	30	Easy	1000	0.0005	0.0006	0.0009	0.0010	0.0015	0.0020	0.0025	0.0030
	6061 T6	180	Easy	900	0.0005	0.0006	0.0009	0.0010	0.0015	0.0020	0.0025	0.0030
	Cast Aluminum** up to 10% silicon	120	Easy	500	0.0005	0.0006	0.0009	0.0010	0.0015	0.0020	0.0025	0.0030
	Brass	30 - 125	Easy	1000	0.0005	0.0006	0.0009	0.0010	0.0015	0.0020	0.0025	0.0030

NOTICE: Reduce feed and speed by 30% for tapered thread forms due to additional material removal.
*Refer to recommended pass chart on page E: 53 when referencing material machinability.
**Uncoated thread mills are recommended for cast aluminum applications

Recommended Cutting Data | Metric (mm)

Solid Carbide | ThreadMills USA™

ISO	Material	Hardness (BHN)	Machinability*	Speed (m/min)	Recommended Feed (mm/tooth) by Cutter Diameter							
					1.50 mm - 3.18 mm	3.19 mm - 4.76 mm	4.77 mm - 6.35 mm	6.36 mm - 7.94 mm	7.95 mm - 9.53 mm	9.54 mm - 12.70 mm	12.71 mm - 15.88 mm	15.89 mm - 19.05 mm
P	**Free-Machining Steel**	100 - 150	Easy	221	0.010	0.013	0.018	0.023	0.025	0.038	0.051	0.064
	1118, 1215, 12L14, etc.	150 - 200	Easy	168	0.010	0.013	0.018	0.023	0.025	0.038	0.051	0.064
		200 - 250	Easy	137	0.010	0.013	0.018	0.023	0.025	0.038	0.051	0.064
	Low-Carbon Steel	85 - 125	Average	221	0.010	0.013	0.018	0.023	0.025	0.038	0.051	0.064
	1010, 1020, 1025, 1522, 1144	125 - 175	Average	168	0.010	0.013	0.018	0.023	0.025	0.038	0.051	0.064
		175 - 225	Average	137	0.010	0.013	0.018	0.023	0.025	0.038	0.051	0.064
		225 - 275	Average	122	0.010	0.013	0.018	0.023	0.025	0.038	0.051	0.064
	Medium-Carbon Steel	125 - 175	Average	137	0.010	0.013	0.015	0.020	0.025	0.038	0.046	0.051
	1010, 1040, 1050, 1527, 1140	175 - 225	Average	122	0.010	0.013	0.015	0.020	0.025	0.038	0.046	0.051
		225 - 275	Average	107	0.010	0.013	0.015	0.020	0.025	0.038	0.046	0.051
		275 - 325	Average	91	0.010	0.013	0.015	0.020	0.025	0.038	0.046	0.051
	Alloy Steel	125 - 175	Average	137	0.010	0.013	0.015	0.020	0.025	0.038	0.046	0.051
	4140, 5140, 8640	175 - 225	Average	122	0.010	0.013	0.015	0.020	0.025	0.038	0.046	0.051
		225 - 275	Average	107	0.010	0.013	0.015	0.020	0.025	0.038	0.046	0.051
		275 - 325	Difficult	91	0.010	0.013	0.015	0.020	0.025	0.038	0.046	0.051
		325 - 375	Difficult	76	0.010	0.013	0.015	0.020	0.025	0.038	0.046	0.051
	High-Strength Alloy	225 - 300	Average	107	0.010	0.013	0.015	0.020	0.025	0.038	0.046	0.051
	4340, 4330V, 300M	300 - 350	Difficult	91	0.010	0.013	0.015	0.020	0.025	0.038	0.046	0.051
		350 - 400	Difficult	76	0.010	0.013	0.015	0.020	0.025	0.038	0.046	0.051
	Structural Steel	100 - 150	Average	137	0.010	0.013	0.018	0.023	0.025	0.038	0.051	0.064
	A36, A285, A516	150 - 250	Average	122	0.010	0.013	0.018	0.023	0.025	0.038	0.051	0.064
		250 - 350	Difficult	91	0.010	0.013	0.018	0.023	0.025	0.038	0.051	0.064
S	**High-Temp Alloy**	140 - 220	Difficult	30	0.008	0.010	0.015	0.020	0.023	0.025	0.030	0.038
	Hastelloy B, Inconel 600	220 - 310	Difficult	23	0.008	0.010	0.015	0.020	0.023	0.025	0.030	0.038
M	**Stainless Steel**	135 - 185	Difficult	130	0.010	0.013	0.015	0.020	0.023	0.025	0.038	0.051
	303, 416, 420	185 - 275	Difficult	122	0.010	0.013	0.015	0.020	0.023	0.025	0.038	0.051
	Stainless Steel PH	185 - 275	Difficult	76	0.010	0.013	0.015	0.020	0.023	0.025	0.038	0.051
	17-4	275 - 325	Difficult	38	0.010	0.013	0.015	0.020	0.023	0.025	0.038	0.051
	Tool Steel	150 - 200	Difficult	99	0.010	0.013	0.018	0.023	0.025	0.038	0.051	0.064
	H-13, H21, A-4	200 - 250	Difficult	69	0.010	0.013	0.018	0.023	0.025	0.038	0.051	0.064
R	**Cast Iron**	120 - 150	Easy	168	0.010	0.013	0.018	0.023	0.025	0.038	0.051	0.064
	Grey, Ductile, Nodular	150 - 200	Easy	152	0.010	0.013	0.018	0.023	0.025	0.038	0.051	0.064
		200 - 220	Easy	137	0.010	0.013	0.018	0.023	0.025	0.038	0.051	0.064
		220 - 260	Average	122	0.010	0.013	0.018	0.023	0.025	0.038	0.051	0.064
		260 - 320	Average	114	0.010	0.013	0.018	0.023	0.025	0.038	0.051	0.064
S	**Wrought Aluminum**	30	Easy	305	0.013	0.015	0.023	0.025	0.038	0.051	0.064	0.076
	6061 T6	180	Easy	274	0.013	0.015	0.023	0.025	0.038	0.051	0.064	0.076
	Cast Aluminum** up to 10% silicon	120	Easy	152	0.013	0.015	0.023	0.025	0.038	0.051	0.064	0.076
	Brass	30 - 125	Easy	305	0.013	0.015	0.023	0.025	0.038	0.051	0.064	0.076

NOTICE: Reduce feed and speed by 30% for tapered thread forms due to additional material removal.
*Refer to recommended pass chart on page E: 53 when referencing material machinability.
**Uncoated thread mills are recommended for cast aluminum applications

Recommended Cutting Data | Imperial (inch)

Solid Carbide | AccuThread® T3

ISO	Material	Hardness (BHN)	Speed (SFM)	Chipload per Tooth (IPT) by Cutter Diameter						
				0.055" - 0.125"	0.126" - 0.188"	0.189" - 0.250"	0.251" - 0.312"	0.313" - 0.375"	0.376" - 0.500"	0.501" - 0.750"
P	**Free-Machining Steel** 1118, 1215, 12L14, etc.	100 - 150	375	0.0008	0.0010	0.0014	0.0018	0.0020	0.0030	0.0035
		150 - 200	275	0.0008	0.0010	0.0014	0.0018	0.0020	0.0030	0.0035
		200 - 250	225	0.0008	0.0010	0.0014	0.0018	0.0020	0.0030	0.0035
	Low-Carbon Steel 1010, 1020, 1025, 1522, 1144, etc.	85 - 125	375	0.0008	0.0010	0.0014	0.0018	0.0020	0.0030	0.0035
		125 - 175	275	0.0008	0.0010	0.0014	0.0018	0.0020	0.0030	0.0035
		175 - 225	225	0.0008	0.0010	0.0014	0.0018	0.0020	0.0030	0.0035
		225 - 275	200	0.0008	0.0010	0.0014	0.0018	0.0020	0.0030	0.0035
	Medium-Carbon Steel 1030, 1040, 1050, 1527, 1140, 1151, etc.	125 - 175	225	0.0008	0.0010	0.0012	0.0016	0.0020	0.0026	0.0031
		175 - 225	200	0.0008	0.0010	0.0012	0.0016	0.0020	0.0026	0.0031
		225 - 275	175	0.0008	0.0010	0.0012	0.0016	0.0020	0.0026	0.0031
		275 - 325	150	0.0008	0.0010	0.0012	0.0016	0.0020	0.0026	0.0031
	Alloy Steel 4140, 5140, 8640, etc.	125 - 175	225	0.0008	0.0010	0.0012	0.0016	0.0020	0.0026	0.0031
		175 - 225	200	0.0008	0.0010	0.0012	0.0016	0.0020	0.0026	0.0031
		225 - 275	175	0.0008	0.0010	0.0012	0.0016	0.0020	0.0026	0.0031
		275 - 325	150	0.0008	0.0010	0.0012	0.0016	0.0020	0.0026	0.0031
		325 - 375	125	0.0008	0.0010	0.0012	0.0016	0.0020	0.0026	0.0031
	High-Strength Alloy 4340, 4330V, 300M, etc.	225 - 300	175	0.0008	0.0010	0.0012	0.0016	0.0020	0.0026	0.0031
		300 - 350	150	0.0008	0.0010	0.0012	0.0016	0.0020	0.0026	0.0031
		350 - 400	125	0.0008	0.0010	0.0012	0.0016	0.0020	0.0026	0.0031
	Structural Steel A36, A285, A516, etc.	100 - 150	225	0.0008	0.0010	0.0014	0.0018	0.0020	0.0030	0.0035
		150 - 250	200	0.0008	0.0010	0.0014	0.0018	0.0020	0.0030	0.0035
		250 - 350	150	0.0008	0.0010	0.0014	0.0018	0.0020	0.0030	0.0035
	Tool Steel H-13, H-21, A-4, 0-2, S-3, etc.	150 - 200	175	0.0008	0.0010	0.0012	0.0016	0.0020	0.0026	0.0031
		200 - 250	125	0.0008	0.0010	0.0012	0.0016	0.0020	0.0026	0.0031
S	**High-Temp Alloy** Hastelloy B, Inconel 600, etc.	140 - 220	100	0.0006	0.0008	0.0012	0.0016	0.0018	0.0020	0.0025
		220 - 310	75	0.0006	0.0008	0.0012	0.0016	0.0018	0.0020	0.0025
	Titanium Alloy	140 - 220	100	0.0006	0.0008	0.0012	0.0016	0.0018	0.0020	0.0025
		220 - 310	75	0.0006	0.0008	0.0012	0.0016	0.0018	0.0020	0.0025
	Aerospace Alloy S82	185 - 275	100	0.0006	0.0008	0.0012	0.0016	0.0018	0.0020	0.0025
		275 - 350	75	0.0006	0.0008	0.0012	0.0016	0.0018	0.0020	0.0025
M	**Stainless Steel** 416, 420, etc.	185 - 275	225	0.0008	0.0010	0.0012	0.0016	0.0018	0.0020	0.0025
		275 - 350	200	0.0008	0.0010	0.0012	0.0016	0.0018	0.0020	0.0025
	Stainless Steel 300 Series 304, 316, 17-4PH, etc.	135 - 185	125	0.0008	0.0010	0.0012	0.0016	0.0018	0.0020	0.0025
		185 - 275	75	0.0008	0.0010	0.0012	0.0016	0.0018	0.0020	0.0025
	Super Duplex Stainless Steel	135 - 185	125	0.0006	0.0008	0.0012	0.0016	0.0018	0.0020	0.0025
		185 - 275	75	0.0006	0.0008	0.0012	0.0016	0.0018	0.0020	0.0025
H	**Hardened Steels**	450 - 500	175	0.0006	0.0008	0.0012	0.0016	0.0018	0.0020	0.0025
		500 - 550	125	0.0006	0.0008	0.0012	0.0016	0.0018	0.0020	0.0025
K	**Cast Iron** Grey, Ductile, Nodular	120 - 150	275	0.0008	0.0010	0.0014	0.0018	0.0020	0.0030	0.0035
		150 - 200	250	0.0008	0.0010	0.0014	0.0018	0.0020	0.0030	0.0035
		200 - 220	225	0.0008	0.0010	0.0014	0.0018	0.0020	0.0030	0.0035
		220 - 260	200	0.0008	0.0010	0.0014	0.0018	0.0020	0.0030	0.0035
		260 - 320	200	0.0008	0.0010	0.0014	0.0018	0.0020	0.0030	0.0035
N	**Wrought Aluminum**	30	500	0.0010	0.0012	0.0018	0.0020	0.0030	0.0040	0.0048
		180	450	0.0010	0.0012	0.0018	0.0020	0.0030	0.0040	0.0048
	Cast Aluminum	30 - 180	250	0.0010	0.0012	0.0018	0.0020	0.0030	0.0040	0.0048
	Brass	30 - 100	500	0.0010	0.0012	0.0018	0.0020	0.0030	0.0040	0.0048

NOTICE: Reduce feed and speed by 30% for tapered thread forms due to additional material removal.
*Refer to recommended pass chart on page E: 53 when referencing material machinability.
**Uncoated thread mills are recommended for cast aluminum applications

Recommended Cutting Data | Metric (mm)

Solid Carbide | AccuThread® T3

ISO	Material	Hardness (BHN)	Speed (m/min)	Chipload per Tooth (mm/tooth) by Cutter Diameter						
				1.40 mm - 3.17 mm	3.18 mm - 4.77 mm	4.78 mm - 6.35 mm	6.36 mm - 7.92 mm	7.93 mm - 9.52 mm	9.53 mm - 12.70 mm	12.71 mm - 19.05 mm
P	**Free-Machining Steel**	100 - 150	115	0.020	0.025	0.035	0.045	0.050	0.075	0.090
	1118, 1215, 12L14, etc.	150 - 200	85	0.020	0.025	0.035	0.045	0.050	0.075	0.090
		200 - 250	70	0.020	0.025	0.035	0.045	0.050	0.075	0.090
	Low-Carbon Steel	85 - 125	115	0.020	0.025	0.035	0.045	0.050	0.075	0.090
	1010, 1020, 1025, 1522, 1144, etc.	125 - 175	85	0.020	0.025	0.035	0.045	0.050	0.075	0.090
		175 - 225	70	0.020	0.025	0.035	0.045	0.050	0.075	0.090
		225 - 275	60	0.020	0.025	0.035	0.045	0.050	0.075	0.090
	Medium-Carbon Steel	125 - 175	70	0.020	0.025	0.030	0.040	0.050	0.065	0.080
	1030, 1040, 1050, 1527, 1140,	175 - 225	60	0.020	0.025	0.030	0.040	0.050	0.065	0.080
	1151, etc.	225 - 275	50	0.020	0.025	0.030	0.040	0.050	0.065	0.080
		275 - 325	45	0.020	0.025	0.030	0.040	0.050	0.065	0.080
	Alloy Steel	125 - 175	70	0.020	0.025	0.030	0.040	0.050	0.065	0.080
	4140, 5140, 8640, etc.	175 - 225	60	0.020	0.025	0.030	0.040	0.050	0.065	0.080
		225 - 275	50	0.020	0.025	0.030	0.040	0.050	0.065	0.080
		275 - 325	45	0.020	0.025	0.030	0.040	0.050	0.065	0.080
		325 - 375	38	0.020	0.025	0.030	0.040	0.050	0.065	0.080
	High-Strength Alloy	225 - 300	50	0.020	0.025	0.030	0.040	0.050	0.065	0.080
	4340, 4330V, 300M, etc.	300 - 350	45	0.020	0.025	0.030	0.040	0.050	0.065	0.080
		350 - 400	38	0.020	0.025	0.030	0.040	0.050	0.065	0.080
	Structural Steel	100 - 150	70	0.020	0.025	0.035	0.045	0.050	0.075	0.090
	A36, A285, A516, etc.	150 - 250	60	0.020	0.025	0.035	0.045	0.050	0.075	0.090
		250 - 350	45	0.020	0.025	0.035	0.045	0.050	0.075	0.090
	Tool Steel	150 - 200	50	0.020	0.025	0.030	0.040	0.050	0.065	0.080
	H-13, H-21, A-4, 0-2, S-3, etc.	200 - 250	38	0.020	0.025	0.030	0.040	0.050	0.065	0.080
S	**High-Temp Alloy**	140 - 220	30	0.015	0.020	0.030	0.040	0.045	0.050	0.065
	Hastelloy B, Inconel 600, etc.	220 - 310	23	0.015	0.020	0.030	0.040	0.045	0.050	0.065
	Titanium Alloy	140 - 220	30	0.015	0.020	0.030	0.040	0.045	0.050	0.065
		220 - 310	23	0.015	0.020	0.030	0.040	0.045	0.050	0.065
	Aerospace Alloy	185 - 275	30	0.015	0.020	0.030	0.040	0.045	0.050	0.065
	S82	275 - 350	23	0.015	0.020	0.030	0.040	0.045	0.050	0.065
M	**Stainless Steel**	185 - 275	70	0.020	0.025	0.030	0.040	0.045	0.050	0.065
	416, 420, etc.	275 - 350	60	0.020	0.025	0.030	0.040	0.045	0.050	0.065
	Stainless Steel 300 Series	135 - 185	38	0.020	0.025	0.030	0.040	0.045	0.050	0.065
	304, 316, 17-4PH, etc.	185 - 275	23	0.020	0.025	0.030	0.040	0.045	0.050	0.065
	Super Duplex Stainless Steel	135 - 185	38	0.015	0.020	0.030	0.040	0.045	0.050	0.065
		185 - 275	23	0.015	0.020	0.030	0.040	0.045	0.050	0.065
H	**Hardened Steels**	450 - 500	50	0.015	0.020	0.030	0.040	0.045	0.050	0.065
		500 - 550	38	0.015	0.020	0.030	0.040	0.045	0.050	0.065
K	**Cast Iron**	120 - 150	85	0.020	0.025	0.035	0.045	0.050	0.075	0.090
	Grey, Ductile, Nodular	150 - 200	75	0.020	0.025	0.035	0.045	0.050	0.075	0.090
		200 - 220	70	0.020	0.025	0.035	0.045	0.050	0.075	0.090
		220 - 260	60	0.020	0.025	0.035	0.045	0.050	0.075	0.090
		260 - 320	60	0.020	0.025	0.035	0.045	0.050	0.075	0.090
N	**Wrought Aluminum**	30	150	0.025	0.030	0.045	0.050	0.075	0.100	0.120
		180	135	0.025	0.030	0.045	0.050	0.075	0.100	0.120
	Cast Aluminum	30 - 180	75	0.025	0.030	0.045	0.050	0.075	0.100	0.120
	Brass	30 - 100	150	0.025	0.030	0.045	0.050	0.075	0.100	0.120

NOTICE: Reduce feed and speed by 30% for tapered thread forms due to additional material removal.
*Refer to recommended pass chart on page E: 53 when referencing material machinability.
**Uncoated thread mills are recommended for cast aluminum applications

Recommended Cutting Data | Imperial (inch)

Indexable | AccuThread® 856 | Positive Rake

ISO	Material	Hardness (BHN)	Machinability**	Speed (SFM)	Recommended Feed (inch/tooth) by Cutter Diameter: 1 flute 0.375" - 0.500"	1 flute 0.501" - 0.750"	1 and 2 flutes 0.751" - 1.000"	3 flutes 1.001" - 1.500"	5 flutes 1.501" - 2.000"	7 flutes 2.001" - 2.750"	8 flutes 2.751" - 3.500"
P	**Free-Machining Steel** 1118, 1215, 12L14, etc.	100 - 150	Easy	900	0.0008	0.0010	0.0012	0.0015	0.0020	0.0025	0.0030
		150 - 200	Easy	700	0.0008	0.0010	0.0012	0.0015	0.0020	0.0025	0.0030
		200 - 250	Easy	500	0.0008	0.0010	0.0012	0.0015	0.0020	0.0025	0.0030
	Low-Carbon Steel 1010, 1020, 1025, 1522, 1144	85 - 125	Average	900	0.0008	0.0010	0.0012	0.0015	0.0020	0.0025	0.0030
		125 - 175	Average	700	0.0008	0.0010	0.0012	0.0015	0.0020	0.0025	0.0030
		175 - 225	Average	600	0.0008	0.0010	0.0012	0.0015	0.0020	0.0025	0.0030
		225 - 275	Average	500	0.0008	0.0010	0.0012	0.0015	0.0020	0.0025	0.0030
	Medium-Carbon Steel 1010, 1040, 1050, 1527, 1140	125 - 175	Average	575	0.0008	0.0009	0.0010	0.0012	0.0015	0.0020	0.0025
		175 - 225	Average	500	0.0008	0.0009	0.0010	0.0012	0.0015	0.0020	0.0025
		225 - 275	Average	450	0.0008	0.0009	0.0010	0.0012	0.0015	0.0020	0.0025
		275 - 325	Average	400	0.0008	0.0009	0.0010	0.0012	0.0015	0.0020	0.0025
	Alloy Steel 4140, 5140, 8640	125 - 175	Average	575	0.0008	0.0009	0.0010	0.0012	0.0015	0.0020	0.0025
		175 - 225	Average	500	0.0008	0.0009	0.0010	0.0012	0.0015	0.0020	0.0025
		225 - 275	Average	450	0.0008	0.0009	0.0010	0.0012	0.0015	0.0020	0.0025
		275 - 325	Difficult	400	0.0008	0.0009	0.0010	0.0012	0.0015	0.0020	0.0025
		325 - 375	Difficult	375	0.0008	0.0009	0.0010	0.0012	0.0015	0.0020	0.0025
	High-Strength Alloy 4340, 4330V, 300M	225 - 300	Average	450	0.0008	0.0009	0.0010	0.0012	0.0015	0.0020	0.0025
		300 - 350	Difficult	400	0.0008	0.0009	0.0010	0.0012	0.0015	0.0020	0.0025
		350 - 400	Difficult	350	0.0008	0.0009	0.0010	0.0012	0.0015	0.0020	0.0025
	Structural Steel A36, A285, A516	100 - 150	Average	600	0.0008	0.0010	0.0012	0.0015	0.0020	0.0025	0.0030
		150 - 250	Average	500	0.0008	0.0010	0.0012	0.0015	0.0020	0.0025	0.0030
		250 - 350	Difficult	450	0.0008	0.0010	0.0012	0.0015	0.0020	0.0025	0.0030
S	**High-Temp Alloy** Hastelloy B, Inconel 600	140 - 220	Difficult	120	0.0005	0.0006	0.0008	0.0010	0.0015	0.0020	0.0025
		220 - 310	Difficult	90	0.0005	0.0006	0.0008	0.0010	0.0015	0.0020	0.0025
M	**Stainless Steel** 303, 416, 420	135 - 185	Difficult	525	0.0005	0.0007	0.0009	0.0015	0.0020	0.0025	0.0030
		185 - 275	Difficult	500	0.0005	0.0007	0.0009	0.0015	0.0020	0.0025	0.0030
	Stainless Steel PH 17-4	185 - 275	Difficult	300	0.0005	0.0007	0.0009	0.0015	0.0020	0.0025	0.0030
		275 - 325	Difficult	150	0.0005	0.0007	0.0009	0.0015	0.0020	0.0025	0.0030
	Tool Steel H-13, H21, A-4	150 - 200	Difficult	575	0.0008	0.0010	0.0012	0.0015	0.0020	0.0025	0.0030
		200 - 250	Difficult	500	0.0008	0.0010	0.0012	0.0015	0.0020	0.0025	0.0030
K	**Cast Iron** Grey, Ductile, Nodular	120 - 150	Easy	675	0.0008	0.0012	0.0015	0.0020	0.0030	0.0040	0.0050
		150 - 200	Easy	625	0.0008	0.0012	0.0015	0.0020	0.0030	0.0040	0.0050
		200 - 220	Easy	575	0.0008	0.0012	0.0015	0.0020	0.0030	0.0040	0.0050
		220 - 260	Average	500	0.0008	0.0012	0.0015	0.0020	0.0030	0.0040	0.0050
		260 - 320	Average	475	0.0008	0.0012	0.0015	0.0020	0.0030	0.0040	0.0050
N	**Wrought Aluminum** 6061 T6	30	Easy	1100	0.0015	0.0020	0.0025	0.0030	0.0040	0.0050	0.0060
		180	Easy	1000	0.0015	0.0020	0.0025	0.0030	0.0040	0.0050	0.0060
	Cast Aluminum** up to 10% silicon	120	Easy	625	0.0015	0.0020	0.0025	0.0030	0.0040	0.0050	0.0060
	Brass	30 - 125	Easy	1100	0.0020	0.0025	0.0030	0.0040	0.0045	0.0055	0.0065

NOTICE: Reduce feed and speed by 30% for tapered thread forms due to additional material removal.
*Refer to recommended pass chart on page E: 53 when referencing material machinability.
**Uncoated thread mills are recommended for cast aluminum applications

Recommended Cutting Data | Metric (mm)

Indexable | AccuThread® 856 | Positive Rake

ISO	Material	Hardness (BHN)	Machinability**	Speed (m/min)	Recommended Feed (mm/tooth) by Cutter Diameter: 1 flute 9.53 mm - 12.70 mm	1 flute 12.71 mm - 19.05 mm	1 and 2 flutes 19.06 mm - 25.40 mm	3 flutes 25.41 mm - 38.10 mm	5 flutes 38.11 mm - 50.80 mm	7 flutes 50.81 mm - 69.85 mm	8 flutes 69.86 mm - 88.90 mm
P	**Free-Machining Steel** 1118, 1215, 12L14, etc.	100 - 150	Easy	274	0.020	0.025	0.030	0.038	0.051	0.064	0.076
		150 - 200	Easy	213	0.020	0.025	0.030	0.038	0.051	0.064	0.076
		200 - 250	Easy	152	0.020	0.025	0.030	0.038	0.051	0.064	0.076
	Low-Carbon Steel 1010, 1020, 1025, 1522, 1144	85 - 125	Average	274	0.020	0.025	0.030	0.038	0.051	0.064	0.076
		125 - 175	Average	213	0.020	0.025	0.030	0.038	0.051	0.064	0.076
		175 - 225	Average	183	0.020	0.025	0.030	0.038	0.051	0.064	0.076
		225 - 275	Average	152	0.020	0.025	0.030	0.038	0.051	0.064	0.076
	Medium-Carbon Steel 1010, 1040, 1050, 1527, 1140	125 - 175	Average	175	0.020	0.023	0.025	0.030	0.038	0.051	0.064
		175 - 225	Average	152	0.020	0.023	0.025	0.030	0.038	0.051	0.064
		225 - 275	Average	137	0.020	0.023	0.025	0.030	0.038	0.051	0.064
		275 - 325	Average	122	0.020	0.023	0.025	0.030	0.038	0.051	0.064
	Alloy Steel 4140, 5140, 8640	125 - 175	Average	175	0.020	0.023	0.025	0.030	0.038	0.051	0.064
		175 - 225	Average	152	0.020	0.023	0.025	0.030	0.038	0.051	0.064
		225 - 275	Average	137	0.020	0.023	0.025	0.030	0.038	0.051	0.064
		275 - 325	Difficult	122	0.020	0.023	0.025	0.030	0.038	0.051	0.064
		325 - 375	Difficult	114	0.020	0.023	0.025	0.030	0.038	0.051	0.064
	High-Strength Alloy 4340, 4330V, 300M	225 - 300	Average	137	0.020	0.023	0.025	0.030	0.038	0.051	0.064
		300 - 350	Difficult	122	0.020	0.023	0.025	0.030	0.038	0.051	0.064
		350 - 400	Difficult	107	0.020	0.023	0.025	0.030	0.038	0.051	0.064
	Structural Steel A36, A285, A516	100 - 150	Average	183	0.020	0.025	0.030	0.038	0.051	0.064	0.076
		150 - 250	Average	152	0.020	0.025	0.030	0.038	0.051	0.064	0.076
		250 - 350	Difficult	137	0.020	0.025	0.030	0.038	0.051	0.064	0.076
S	**High-Temp Alloy** Hastelloy B, Inconel 600	140 - 220	Difficult	37	0.013	0.015	0.020	0.025	0.038	0.051	0.064
		220 - 310	Difficult	27	0.013	0.015	0.020	0.025	0.038	0.051	0.064
M	**Stainless Steel** 303, 416, 420	135 - 185	Difficult	160	0.013	0.018	0.023	0.038	0.051	0.064	0.076
		185 - 275	Difficult	152	0.013	0.018	0.023	0.038	0.051	0.064	0.076
	Stainless Steel PH 17-4	185 - 275	Difficult	91	0.013	0.018	0.023	0.038	0.051	0.064	0.076
		275 - 325	Difficult	46	0.013	0.018	0.023	0.038	0.051	0.064	0.076
	Tool Steel H-13, H21, A-4	150 - 200	Difficult	175	0.020	0.025	0.030	0.038	0.051	0.064	0.076
		200 - 250	Difficult	152	0.020	0.025	0.030	0.038	0.051	0.064	0.076
K	**Cast Iron** Grey, Ductile, Nodular	120 - 150	Easy	206	0.020	0.030	0.038	0.051	0.076	0.102	0.127
		150 - 200	Easy	191	0.020	0.030	0.038	0.051	0.076	0.102	0.127
		200 - 220	Easy	175	0.020	0.030	0.038	0.051	0.076	0.102	0.127
		220 - 260	Average	152	0.020	0.030	0.038	0.051	0.076	0.102	0.127
		260 - 320	Average	145	0.020	0.030	0.038	0.051	0.076	0.102	0.127
N	**Wrought Aluminum** 6061 T6	30	Easy	335	0.038	0.051	0.064	0.076	0.102	0.127	0.152
		180	Easy	305	0.038	0.051	0.064	0.076	0.102	0.127	0.152
	Cast Aluminum** up to 10% silicon	120	Easy	191	0.038	0.051	0.064	0.076	0.102	0.127	0.152
	Brass	30 - 125	Easy	335	0.051	0.064	0.076	0.102	0.114	0.140	0.165

NOTICE: Reduce feed and speed by 30% for tapered thread forms due to additional material removal.
*Refer to recommended pass chart on page E: 53 when referencing material machinability.
**Uncoated thread mills are recommended for cast aluminum applications

Recommended Cutting Data | Imperial (inch)

Indexable | AccuThread® 856 | Neutral Rake

ISO	Material	Hardness (BHN)	Machinability**	Speed (SFM)	Recommended Feed (inch/tooth) by Cutter Diameter		
					3 flutes	5 flutes	6 flutes
					1.000" - 1.499"	1.500" - 1.999"	2.000" - 2.750"
P	**Free-Machining Steel**	100 - 150	Easy	765	0.0013	0.0017	0.0021
	1118, 1215, 12L14, etc.	150 - 200	Easy	595	0.0013	0.0017	0.0021
		200 - 250	Easy	425	0.0013	0.0017	0.0021
	Low-Carbon Steel	85 - 125	Average	765	0.0013	0.0017	0.0021
	1010, 1020, 1025, 1522, 1144	125 - 175	Average	595	0.0013	0.0017	0.0021
		175 - 225	Average	510	0.0013	0.0017	0.0021
		225 - 275	Average	425	0.0013	0.0017	0.0021
	Medium-Carbon Steel	125 - 175	Average	490	0.0010	0.0013	0.0017
	1010, 1040, 1050, 1527, 1140	175 - 225	Average	425	0.0010	0.0013	0.0017
		225 - 275	Average	380	0.0010	0.0013	0.0017
		275 - 325	Average	340	0.0010	0.0013	0.0017
	Alloy Steel	125 - 175	Average	490	0.0010	0.0013	0.0017
	4140, 5140, 8640	175 - 225	Average	425	0.0010	0.0013	0.0017
		225 - 275	Average	380	0.0010	0.0013	0.0017
		275 - 325	Difficult	340	0.0010	0.0013	0.0017
		325 - 375	Difficult	320	0.0010	0.0013	0.0017
	High-Strength Alloy	225 - 300	Average	390	0.0010	0.0013	0.0017
	4340, 4330V, 300M	300 - 350	Difficult	340	0.0010	0.0013	0.0017
		350 - 400	Difficult	300	0.0010	0.0013	0.0017
	Structural Steel	100 - 150	Average	510	0.0013	0.0017	0.0021
	A36, A285, A516	150 - 250	Average	425	0.0013	0.0017	0.0021
		250 - 350	Difficult	390	0.0013	0.0017	0.0021
S	**High-Temp Alloy**	140 - 220	Difficult	–	–	–	–
	Hastelloy B, Inconel 600	220 - 310	Difficult	–	–	–	–
M	**Stainless Steel**	135 - 185	Difficult	–	–	–	–
	303, 416, 420	185 - 275	Difficult	–	–	–	–
	Stainless Steel PH	185 - 275	Difficult	–	–	–	–
	17-4	275 - 325	Difficult	–	–	–	–
	Tool Steel	150 - 200	Difficult	–	–	–	–
	H-13, H21, A-4	200 - 250	Difficult	–	–	–	–
K	**Cast Iron**	120 - 150	Easy	575	0.0017	0.0026	0.0034
	Grey, Ductile, Nodular	150 - 200	Easy	525	0.0017	0.0026	0.0034
		200 - 220	Easy	490	0.0017	0.0026	0.0034
		220 - 260	Average	425	0.0017	0.0026	0.0034
		260 - 320	Average	400	0.0017	0.0026	0.0034
N	**Wrought Aluminum**	30	Easy	–	–	–	–
	6061 T6	180	Easy	–	–	–	–
	Cast Aluminum** up to 10% silicon	120	Easy	–	–	–	–
	Brass	30 - 125	Easy	–	–	–	–

NOTICE: Reduce feed and speed by 30% for tapered thread forms due to additional material removal.
*Refer to recommended pass chart on page E: 53 when referencing material machinability.
**Uncoated thread mills are recommended for cast aluminum applications

Recommended Cutting Data | Metric (mm)

Indexable | AccuThread® 856 | Neutral Rake

ISO	Material	Hardness (BHN)	Machinability**	Speed (m/min)	Recommended Feed (mm/tooth) by Cutter Diameter		
					3 flutes 25.41 mm - 38.09 mm	5 flutes 38.10 mm - 50.77 mm	6 flutes 50.78 mm - 69.85 mm
P	**Free-Machining Steel** 1118, 1215, 12L14, etc.	100 - 150	Easy	233	0.032	0.043	0.054
		150 - 200	Easy	181	0.032	0.043	0.054
		200 - 250	Easy	129	0.032	0.043	0.054
	Low-Carbon Steel 1010, 1020, 1025, 1522, 1144	85 - 125	Average	233	0.032	0.043	0.054
		125 - 175	Average	181	0.032	0.043	0.054
		175 - 225	Average	156	0.032	0.043	0.054
		225 - 275	Average	129	0.032	0.043	0.054
	Medium-Carbon Steel 1010, 1040, 1050, 1527, 1140	125 - 175	Average	149	0.026	0.032	0.043
		175 - 225	Average	129	0.026	0.032	0.043
		225 - 275	Average	116	0.026	0.032	0.043
		275 - 325	Average	104	0.026	0.032	0.043
	Alloy Steel 4140, 5140, 8640	125 - 175	Average	149	0.026	0.032	0.043
		175 - 225	Average	129	0.026	0.032	0.043
		225 - 275	Average	116	0.026	0.032	0.043
		275 - 325	Difficult	104	0.026	0.032	0.043
		325 - 375	Difficult	97	0.026	0.032	0.043
	High-Strength Alloy 4340, 4330V, 300M	225 - 300	Average	116	0.026	0.032	0.043
		300 - 350	Difficult	104	0.026	0.032	0.043
		350 - 400	Difficult	91	0.026	0.032	0.043
	Structural Steel A36, A285, A516	100 - 150	Average	156	0.032	0.043	0.054
		150 - 250	Average	129	0.032	0.043	0.054
		250 - 350	Difficult	116	0.032	0.043	0.054
S	**High-Temp Alloy** Hastelloy B, Inconel 600	140 - 220	Difficult	–	–	–	–
		220 - 310	Difficult	–	–	–	–
M	**Stainless Steel** 303, 416, 420	135 - 185	Difficult	–	–	–	–
		185 - 275	Difficult	–	–	–	–
	Stainless Steel PH 17-4	185 - 275	Difficult	–	–	–	–
		275 - 325	Difficult	–	–	–	–
	Tool Steel H-13, H21, A-4	150 - 200	Difficult	–	–	–	–
		200 - 250	Difficult	–	–	–	–
K	**Cast Iron** Grey, Ductile, Nodular	120 - 150	Easy	175	0.043	0.065	0.087
		150 - 200	Easy	162	0.043	0.065	0.087
		200 - 220	Easy	149	0.043	0.065	0.087
		220 - 260	Average	129	0.043	0.065	0.087
		260 - 320	Average	123	0.043	0.065	0.087
N	**Wrought Aluminum** 6061 T6	30	Easy	–	–	–	–
		180	Easy	–	–	–	–
	Cast Aluminum** up to 10% silicon	120	Easy	–	–	–	–
	Brass	30 - 125	Easy	–	–	–	–

NOTICE: Reduce feed and speed by 30% for tapered thread forms due to additional material removal.
*Refer to recommended pass chart on page E: 53 when referencing material machinability.
**Uncoated thread mills are recommended for cast aluminum applications

Thread Mill Programming Guide

What you need to know
- Thread milling can be easily accomplished with simple G code programming.
- If your machine is capable of 3 axis (helical) interpolation, you can and **should** be thread milling.
- Basic programming of a one pass thread mill can be achieved in six basic steps.

AVAILABLE ONLINE 24/7
or download *INSTA-CODE*®
visit www.alliedmachine.com

The following are examples of how to calculate and program a M16x2 right-hand thread that will be 10 mm deep produced in one pass.

Major thread diameter	**16 mm**	Major diameter of thread
Threads per inch		(only applies to imperial threads)
Length of thread	**10 mm**	Desired length of cut
Velocity	**221 m/min**	Recommended velocity for material to be cut
Feed per flute	**0.038 mm/tooth**	Recommended feed rate per cutting edge
Number of flutes	**4**	Number of flutes on tool to be used
Cutter diameter	**11.94 mm**	Diameter of cutting tool
Using the information above, the values can be calculated:		
Pitch	**2.0 mm**	Use 1/ threads per inch for imperial
Speed	**5895 RPM**	(318.47 • m/min) / cutter diameter or (SFM • 3.82) / cutter diameter
Linear feed	**896.04 mm/min**	RPM • (Feed per flute • Number of flutes)
Feed rate for thread milling	**227.37 mm/min**	((Major thread diameter - cutter diameter) / Major thread diameter) • Linear feed
Z-axis travel on arc on	**0.25 mm**	(Pitch / 8)
Z-axis travel for full thread	**10.25 mm**	(Pitch / 8) + Length of cut
Arc on/off	**1.015 mm**	(Major thread diameter - cutter diameter) / 4
Full rotation value	**2.030 mm**	(Major thread diameter - cutter diameter) / 2

Major thread diameter	16 mm	**Feed rate for thread milling**	227.37 mm/min	**Arc on/off value**	1.015 mm
Cutter diameter	11.94 mm	**Z-axis depth for full thread**	10.25 mm	**Full rotation value**	2.030 mm
Length of thread	10.00 mm	**Z-axis for arc on/off**	0.25 mm	**Pitch value**	2.00 mm

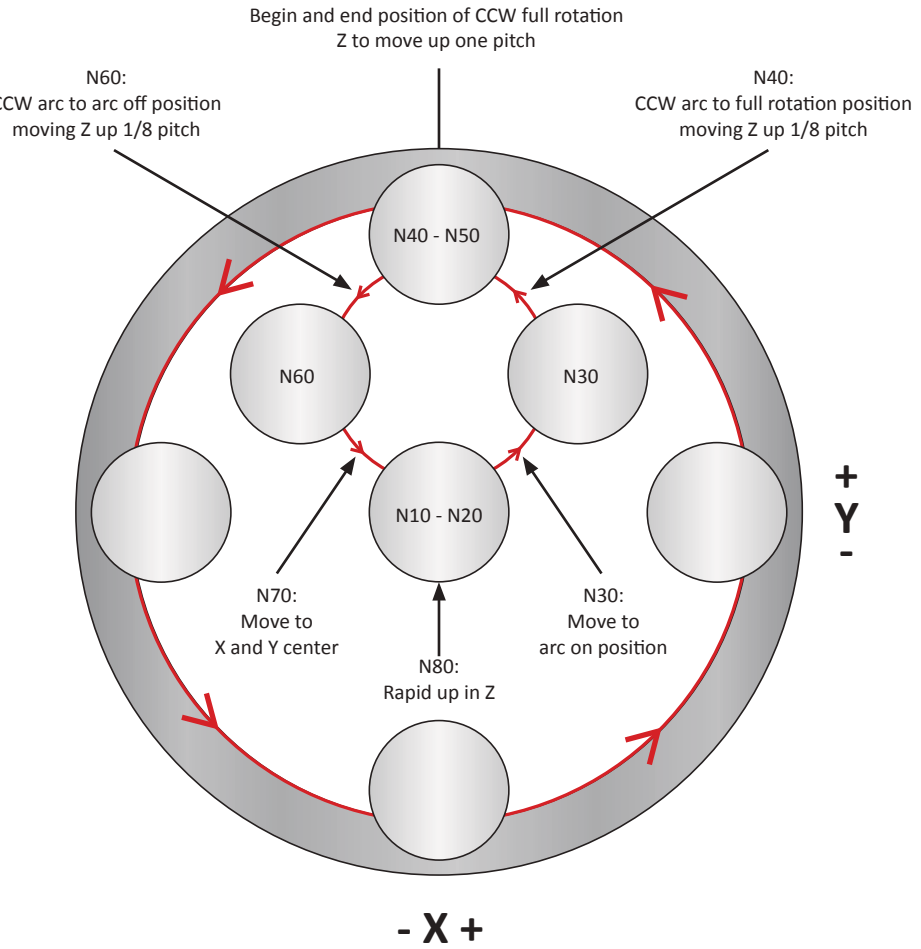

			5895	M03				
		S	Turn on spindle in the clockwise direction.					
1	N10							
			Lower tool the depth required plus an additional 1/8 pitch for the arc on. Tool remains in the center of the hole.					
2	N20	G91	G01		Z -10.250			F 1136.25
			Position the tool for the arc on motion and turn on the cutter compensation.					
	N30	G41		X 1.015	Y 1.015		D1	F 681.75
3			Arc on to engage the tool to the major thread diameter while moving the tool up in the Z-axis 1/8 pitch. **NOTE**: X and Y is the end point. I and J is the center point of the arc.					
	N40		G03	X -1.015	Y 1.015	Z 0.250	I -1.015	J0.000 F 227.37
			Full pass. Interpolate the thread mill inside the major thread diameter while moving the tool up 1 pitch in the Z-axis.					
4	N50		G03	X 0.000	Y 0.000	Z 2.000	I 0.000	J -2.030
			Arc off to disengage the tool from the major thread diameter while moving the tool up in the Z-axis 1/8 pitch.					
	N60		G03	X -1.015	Y -1.015	Z 0.250	I 0.000	J -1.015 F 909.00
5			Return to center. Turn off cutter compensation and move the tool back to center.					
	N70	G40	G01	X 1.015	Y -1.015			F 1136.25
			Return to top. Rapid the tool back to the top of the threaded hole.					
	N80		G00			Z 7.750		
6			Switch back to absolute positioning and rapid to a safe point in Z above part level (assumed to be 1 pitch above part level for demonstration purposes below).					
	N90	G90						

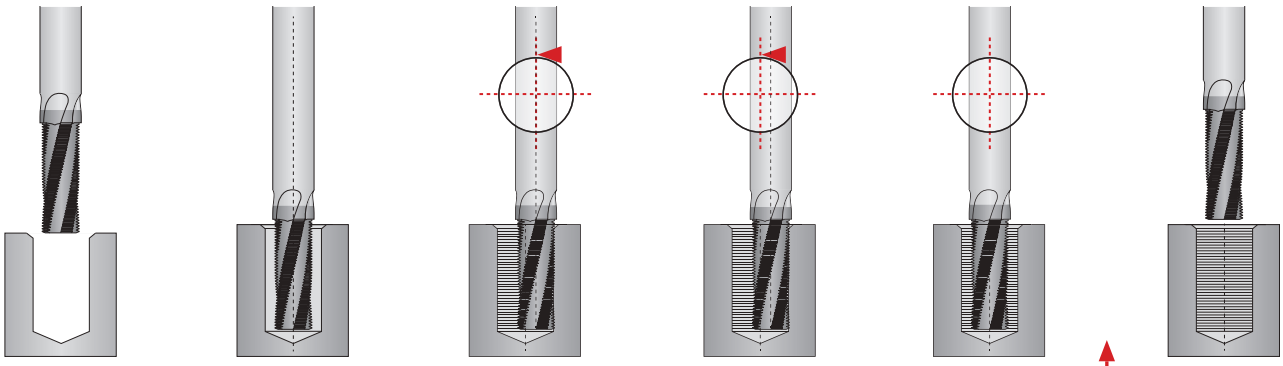

Step 1 N10	Step 2 N20	Step 3 N30 - N40	Step 4 N50	Step 5 N60 - N70	Step 6 N80 - N90
• Preparatory commands. • Positioning above hole center and at hole level in Z. • In absolute position mode.	• Change to incremental. • Feed to bottom of hole. • Z-axis depth for full thread.	• Activate left cutter comp. • Feed to arc on position. • Arc to full rotation value while moving Z up 1/8 pitch. • Z-axis move for arc on.	• One complete CCW rotation at full arc rotation value while moving Z up 1 pitch value.	• CCW arc from full rotation value to the arc on/off value while moving Z up 1/8 pitch (Z-axis move for arc off).	• Rapid up in Z.

Technical Information

AccuThread® T3

Spindle Rotation

Tools are left-hand cutting. The left-hand cut allows the tool to climb mill when creating a right-hand thread with an AccuThread T3. Climb milling reduces deflection and heat generated during the cut.

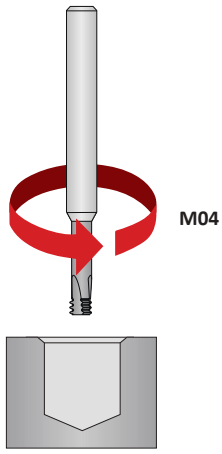

Direction of Helical Interpolation

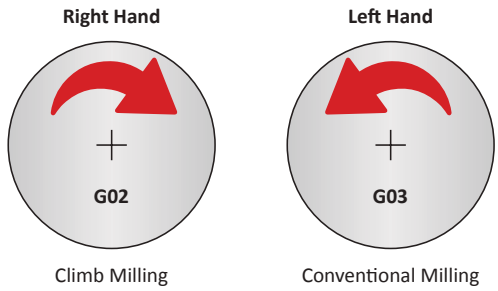

Programming Z-Axis Cutting Path

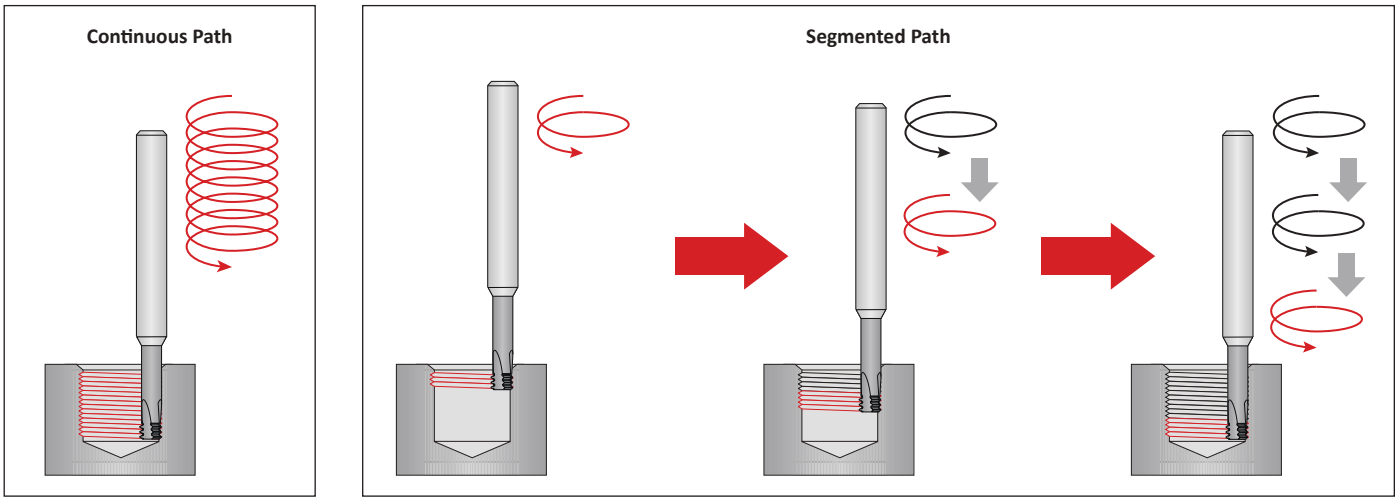

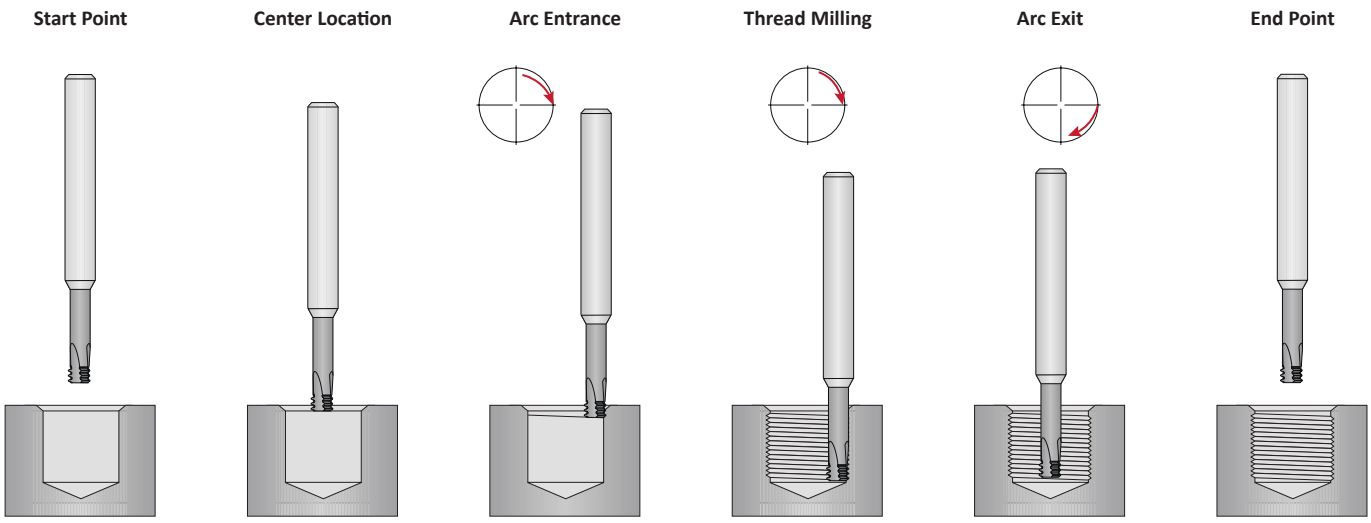

Notes

Thread Mill Troubleshooting Guide

Causes		Problem: Thread mill is showing accelerated or excessive wear	Cutting edges are chipping	Thread mill is breaking in the first hole of part	Thread mill is creating excessive chatter	Out of round thread is produced	Bell-mouthed thread form (small at bottom, big at top)	Part rejection because of rough flank finish	Steps in thread profile	Gauge difference from part to part	Machine not making correct paths to create thread profile	Control not accepting the program
Catalog	Incorrect tool selection			1	1							
	Incorrect speed and feed selection	2, 3	2, 3		2, 3			2, 3				
Speed and Feed	RPM too high	5										
	RPM too low				4		4	4				
	Machine tool specifications restrict RPMs			5, 19								
	Feed rate too high		7	7			7	7	7			
	Feed rate too low	6										
	Incorrect adjusted feed rate adjustment ratio			12								
	Machine tool specification restricts feed rate					7, 19						
	Ramp-in is programmed as an axial move			20					20			
Tool	Thread mill moved or slipped in its holding device	13	13	13	13			13	13			
	Tool is sticking out of the holder too far	15	15	15	15			15	15	15		
	Runout between thread mill and holder				10			10				
	Incorrect coating creating built up edge	8, 17								8, 17		
	Helix angle too low				9			9				
	Excessive thread mill wear								11	11		
	Excessive tool pressure	7, 11, 14					7, 11, 14					
Machine	Workpiece moving in its fixturing	16	16	16	16			16		16		
	Insufficient coolant pressure or flow	17	17									
	Lack of machine rigidity	16	16		16		16	16				
Programming	Incorrect number of passes			22			22					
	Incorrect program variables			18, 26							18, 26	
	Did not account for X/Y radial moves for tapered threads										24, 26	
	Incorrect cutter compensation variables			23, 26								23, 26
	Helical interpolation option not on machine or turned off										21, 26	21, 26
	Machine tool control is not formatted to standard EIA/ASCII/ISO Code											25, 26

Troubleshooting Solutions

1. Refer to catalog to ensure proper tool selection.
2. Verify the correct speed was selected from the catalog speed and feed chart.
3. Verify the correct feed rate was selected from the catalog speed and feed chart.
4. Increase the spindle speed (RPM).
5. Decrease the spindle speed (RPM).
6. Increase feed per tooth.
7. Decrease feed per tooth.
8. Investigate other coatings.
9. Increase the tool helix.
10. Gauge runout between thread mill and tool holder.
11. Perform tool change at quicker intervals.
12. Adjust the feed rate ratio properly to the correct actual penetration rate for internal threads. Refer to speed and feed pages for formula.
13. Use hydraulic clamping chuck.
14. Check the tool for excessive wear. Beginning threads will wear the fastest.
15. Make the amount of overhang in the holding device as short as possible.
16. Verify the workpiece is properly clamped. Retighten or increase stability if necessary.
17. Increase the coolant flow and volume.
18. Check the milling program variables, especially the positive or negative value associated with I and J values.
19. Make sure the machine has the appropriate axis and path speed capabilities.
20. Make sure the thread mill is arcing in the major diameter instead of making a radial move.
21. Make sure the machine tool has a helical interpolation option that is on.
22. Increase the number of thread mill passes.
23. Make sure the cutter compensation variables are input into the G41 program line.
24. Adjust the program for pipe tap threads to taper out on diameter in X/Y directions to create proper form.
25. Request information from the machine tool builder regarding its programming formats.
26. Scan and email a copy of your program to the Application Engineering department at **appeng@alliedmachine.com**.

SECTION

X

Special Tooling Solutions

Special Tooling Solutions

Superion® | Insta-Quote® | Engineered Specials

Specialty is Our Specialty

When it comes to designing and developing special solutions for customers, Allied Machine is the top choice. Our engineers see applications in ways many others don't, and that ability allows us to win situations that haven't been won before.

If you have a particularly unique or difficult application, give us a call. Most of our tooling can be tweaked as specials, and we can create entirely new concepts if alterations to standard product won't do the trick.

After all, everyone deserves some special attention.

Your safety and the safety of others is very important. This catalog contains important safety messages. Always read and follow all safety precautions.

This triangle is a safety hazard symbol. It alerts you to potential safety hazards that can cause tool failure and serious injury.

When you see this symbol in the catalog, look for a related safety message that may be near this triangle or referred to in the nearby text.

There are safety signal words also used in the catalog. Safety messages follow these words.

WARNING

WARNING (shown above) means that failure to follow the precautions in this message could result in tool failure and serious injury.

NOTICE means that failure to follow the precautions in this message could result in damage to the tool or machine but not result in personal injury.

NOTE and **IMPORTANT** are also used. These are important that you read and follow but are not safety-related.

Visit www.alliedmachine.com for the most up-to-date information and procedures.

Special Tooling Solutions Contents

Introduction Information

Overview of Specials Capabilities . . . . . 2 - 3

Superion® Solid Carbide and PCD Tooling . . . . . 4 - 5

Insta-Quote®

Program Overview 6

User Guide . . . . . 7 -9

T-A® Inserts 10

T-A® Holders 11

GEN3SYS® XT Holders 12

ALVAN® Reamers 13

Engineered Specials

Insert Designs 14

Vaccum Drill 15

Guided T-A® 16

Success Stories 17

i-Form . . . . . 18 - 19

Special Design Examples . . . . . 20 - 21

QDSI™ Inserts . . . . . 22 - 23

Send in Your Own Design . . . . . 24 - 25

Deep Hole Drilling Guidelines 26

Special Tooling Options

Special Tooling is Our Specialty

Allied Machine offers three methods for obtaining special tooling to solve any application problem you encounter: Superion®, Insta-Quote®, and Engineered Specials. We know standard tooling can't be the answer for everyone, and that's why we specialize in developing unique tooling to fit your needs.

Many of our products can be altered as specials. In fact, many of our standard items are results of frequently requested special features. Many times, one special design can end up solving problems for multiple customers across a variety of industries. Our specials capabilities truly set us apart from our competition.

Our Application Engineering team and Field Sales Engineers are trained and highly skilled to develop unique solutions that you won't find anywhere else. If you need special tooling, give us a call. Let us be the ones to tell you it can't be done. But don't expect us to.

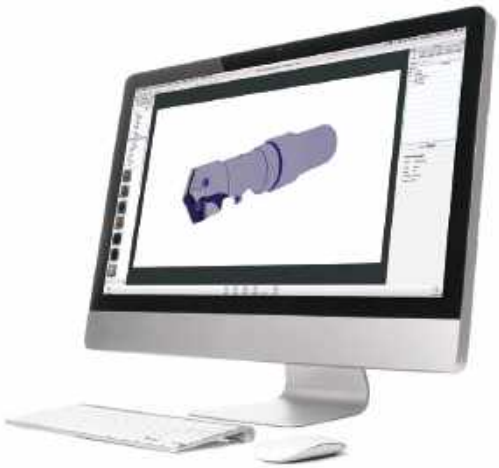

SUPERION®

Solid Carbide Specials

Advanced Capabilities

With the addition of the Superion solid carbide products, Allied Machine can now provide made-to-order special tooling to better help customers achieve optimal performance and productivity in their holemaking applications. Give us a call today and see the new solutions we can provide.

Made-to-Order Solid Carbide Specials

- PCD Tooling.
- Burnishing Drills.
- Solid Carbide Drills.
- Step Drills / PCD Step Reamers.

Insta-Quote®

Insta-Quote is an online custom tool designer. The program is available 24/7 and guides you through the steps as you create a special tool designed to meet the requirements of your application.

Products Available:

- T-A® Inserts.
- T-A® Holders.
- GEN3SYS® XT Holders.
- ALVAN® Reamers.

See pages X: 6 - 13

Engineered Specials

When the requirements of your application fall outside the limitations of Insta-Quote, your special tooling becomes an Engineered Special. These are tool designs that our engineers get to create and develop specifically for you.

Reasons to Call:

- Many standard products can be specially engineered.
- Allied Machine specials can save you time and increase tool life.
- Our engineers have the skills and knowledge to create designs that meet the challenge.

See pages X: 14 - 21

Industry Solutions

Every Industry Needs Some Special Attention

Many specific industry applications can be tricky, and processes can change drastically from one sector to the next. Allied's Field Sales Engineers and Application Engineers work together to develop breakthrough solutions that help customers master processes that before seemed impossible to improve.

You know your parts. You know your materials. You know what works and what doesn't. All you need to do is let us know what you're dealing with, and we'll take it from there. Whether you're machining the wings of an airplane or the engine block in a new car, we'll develop the right design to solve the problem you're facing.

For more industry examples, see Allied Machine's case studies at **www.alliedmachine.com/RealLifeResults**.

Automotive
Engine Block

Aerospace
Central Fuselage Wing Box

Heavy Machinery
Track Links

Oil and Gas
Heat Exchanger

COMPLEX SOLUTIONS

INNOVATIVE SOLUTIONS

LONG SOLUTIONS

EVERY PROBLEM
HAS A
SOLUTION

SUPERION

Solid Carbide and PCD Tooling Solutions

WHAT IS SUPERION?

Superion capabilities provide cutting-edge solutions in both solid carbide and PCD tooling.

WHY SHOULD YOU USE SUPERION?

- State-of-the-art manufacturing automation allows for high repeatability and consistency, regardless of the quantity you need.
- Superion provides application-specific solutions tailored to meet your toughest demands.
- Superion tooling excels in difficult and unique material applications.
- Our goal is to provide you a quality solution to exceed your need on a schedule that satisfies.

WHEN SHOULD YOU USE SUPERION?

- When finish is critical and dimensions are tight, Superion will deliver a tool to maintain your tolerances.
- When your tooling budget requires regrinds and the ability to remanufacture, Superion tackles your needs.
- If you're dealing with CFRP or other unique materials, Superion tooling is the right solution.

AEROSPACE / Landing Gear Components

DRILL BURNISH TOOLS

Reduce cycle time, increase throughput, and increase profitability by combining roughing and finishing operations using our burnishing geometry for applications in which surface finish and hole tolerance are critical.

AUTOMOTIVE / Crankshafts

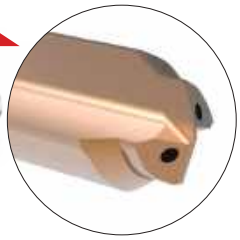

COMBINATION TOOLS

Combine multiple steps and various profile features to improve throughput. Combination tools reduce cost per hole and increase profit potential.

HEAVY EQUIPMENT / Manifolds

SOLID CARBIDE TOOLS WITH COOLANT

Solid carbide solutions optimize the manufacturing of manifolds. Most port specs call for at least three steps, and combining these features can reduce costs and increase throughput.

AUTOMOTIVE / Transmission Components

SOLID CARBIDE STEP TOOLS

You can rely on Superion's state-of-the-art manufacturing facility, built specifically to satisfy the customer's needs. Whether it's 10 drills or 1,000 drills, Superion will provide consistent and effective solutions to your production needs.

Superion®

Solid Carbide and PCD Tooling Solutions

From Concept to Reality

Allied's team of engineers is ready to assist you with your application. We'll gather all the information we need about your application and turn your concept into reality. Give us a call today, and we will collaborate with you and listen to your needs, formulate a concept, develop the model, and build the solution.

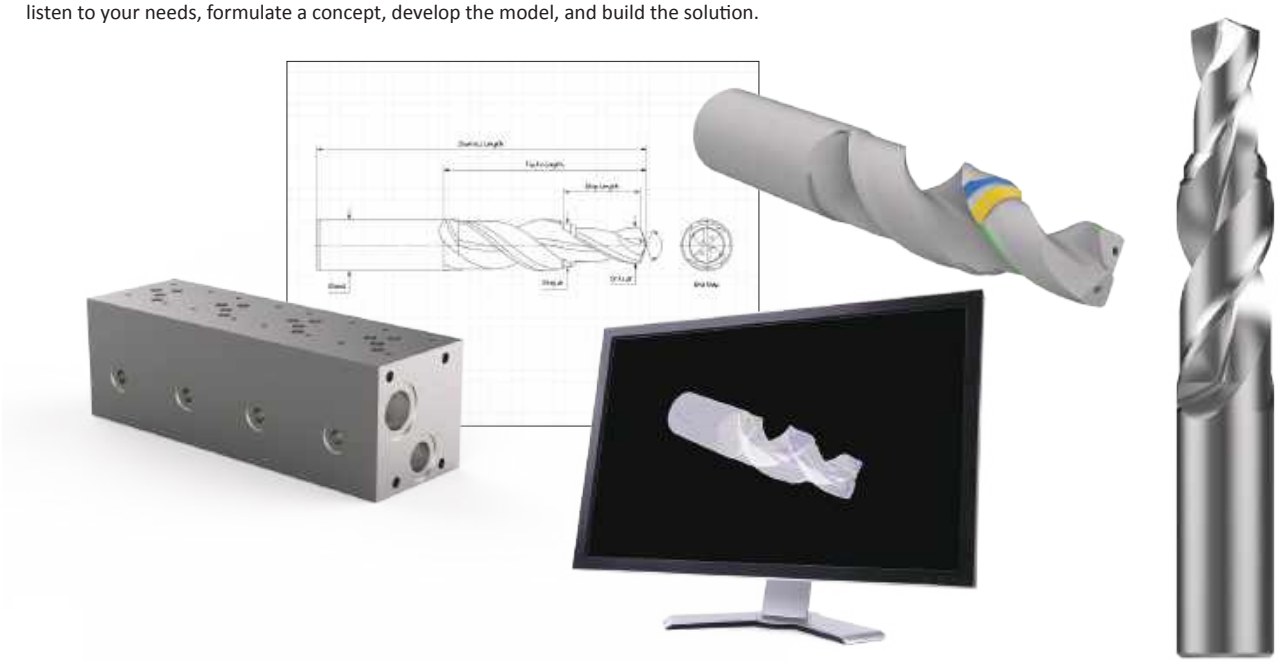

The Challenge of CFRP Materials

Carbon fiber material is ideal for industries that require components with high strength and rigidity without increasing weight. In other words, these products need to be really strong and sturdy but also really light. For example, the aerospace industry revolves around aerodynamics, which is why carbon fiber is utilized to increase the quality of aerospace components without increasing the weight.

Many other metals are composed of uniform properties that are the same in every direction. Carbon fiber, on the other hand, is made of fabrics that are specifically positioned in different directions. This configuration increases the strength and rigidity of the material, but it also makes carbon fiber much more difficult to drill.

Results When Drilling Aerospace-Grade Carbon Fiber

Holes drilled with CVD drill insert

Holes drilled with PCD tooling

Just Look at That!

These images tell the whole story. Check out the holes drilled by the PCD tooling versus the CVD insert. Notice the excessive delamination on the first group of holes. The PCD tooling avoids most delamination, resulting in an excellent hole in the difficult-to-drill carbon fiber material.

Carbon fiber has high strength that causes:

- Wear on the cutting tool.
- Splintering/fraying of the hole.

As you can see, the first test experienced these problems. The PCD tooling, however, successfully drilled clean holes.

Insta-Quote®

Design Your Custom Tooling

Insta-Quote®

Design your custom tooling and receive a drawing and quote...all within *minutes*.

iq.alliedmachine.com

Design Your Own Solutions

Insta-Quote is an online program that allows you to design and quote your own tooling in a matter of minutes. After you log in, Insta-Quote will guide you through the steps to gather all the necessary information and generate the solution you need. Within the system, you can choose from the following tools to design:

- T-A® Inserts.
- T-A® Holders.
- GEN3SYS® XT Holders.

Along with designing these products as specials, Insta-Quote can also help you create your item number for ALVAN® Reamers. Because reamer item numbers do not follow the same method as Allied Machine's standard products, you must build your reamer item numbers. Insta-Quote can do that for you.

- Replaceable Head Style.
- Monobloc Style.
- Cutting Ring Style.

Design anytime from anywhere.
Available online 24/7.

Insta-Quote®

User Guide

Where Do I Find Insta-Quote?

There are two ways to get to the Insta-Quote program. You can visit the Allied Machine homepage (www.alliedmachine.com) and find it under the Online Tools section of the upper navigation.

Or you can simply go to iq.alliedmachine.com to access Insta-Quote directly.

OR **iq.alliedmachine.com**

1 **Log In**

Fill in "User Name" and "Password" and click the login button. If you do not have a login, just click the "Registration Form" option beneath the login button and submit your registration.

2 **Select Activity**

On this screen, you can choose to create a new tool, edit a previous tool, update your quote, or copy a previous item.

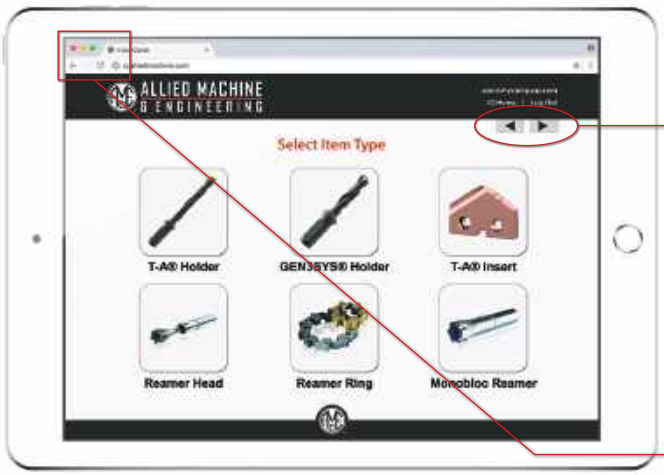

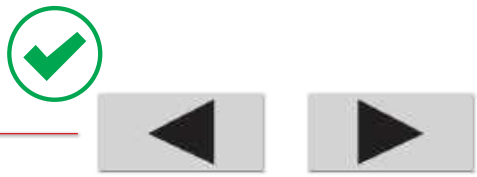

IMPORTANT:
The right and left arrows will navigate you through each step. **DO NOT** use the web browser's back and forward buttons; doing so may result in loss of progress.

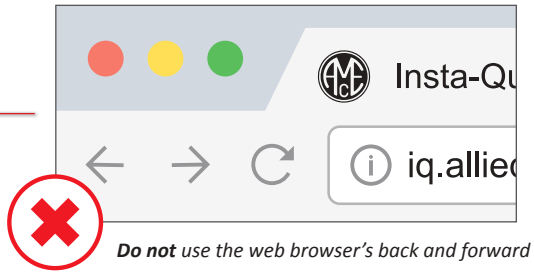

***Do not** use the web browser's back and forward arrows*

3 **Select Tool Type**

Choose the type of special tool you would like to create. The options include T-A® inserts, T-A® holders, GEN3SYS® holders, replaceable head reamers, monobloc reamers, and cutting ring reamers.

What Is My Item Number?

As soon as you select the type of product you want to design, Insta-Quote automatically generates the item number for your tool. The item number will appear at the top left-hand side of your screen.

170209–547

Year | Month | Day | Reference No.

First Part of the Item Number:
This represents the date you began designing your tool (ex. 170209 = February 9, 2017).

Second Part of the Item Number:
This is the reference number for that specific item. If you begin designing another tool on the same day, the first part of the new item number would be the same, but the reference number would be unique to that new item.

4 **Shank Selection**

Select the shank type you require and then click the right arrow button ▶ to proceed.

5 **Shank Options**

After choosing the shank type, you will be provided with additional shank options (if applicable). Once your selections are made, click the right arrow button ▶ to proceed.

6 **Select Body Style**

Choose the holder style you need, and then click the right arrow button ▶ to proceed.

7 **Body Options**

After choosing the holder style, you will be provided with additional holder options (if applicable). Once your selections are made, click the right arrow button ▶ to proceed.

8 **Coolant Options**

On this screen you will select your coolant options. When finished, click the right arrow button ▶ to proceed.

9

Contact Information

Complete the contact details and select a language for the drawing. Click the "Quote Item" button to proceed.

10

Quote Your Item

Once you have selected "Quote Item," a box will appear to let you know the estimated time remaining before your quote and drawing are created (typical wait time is less than 1 minute).

NOTE: Your pop-up blocker must be disabled in order to view the downloaded files.

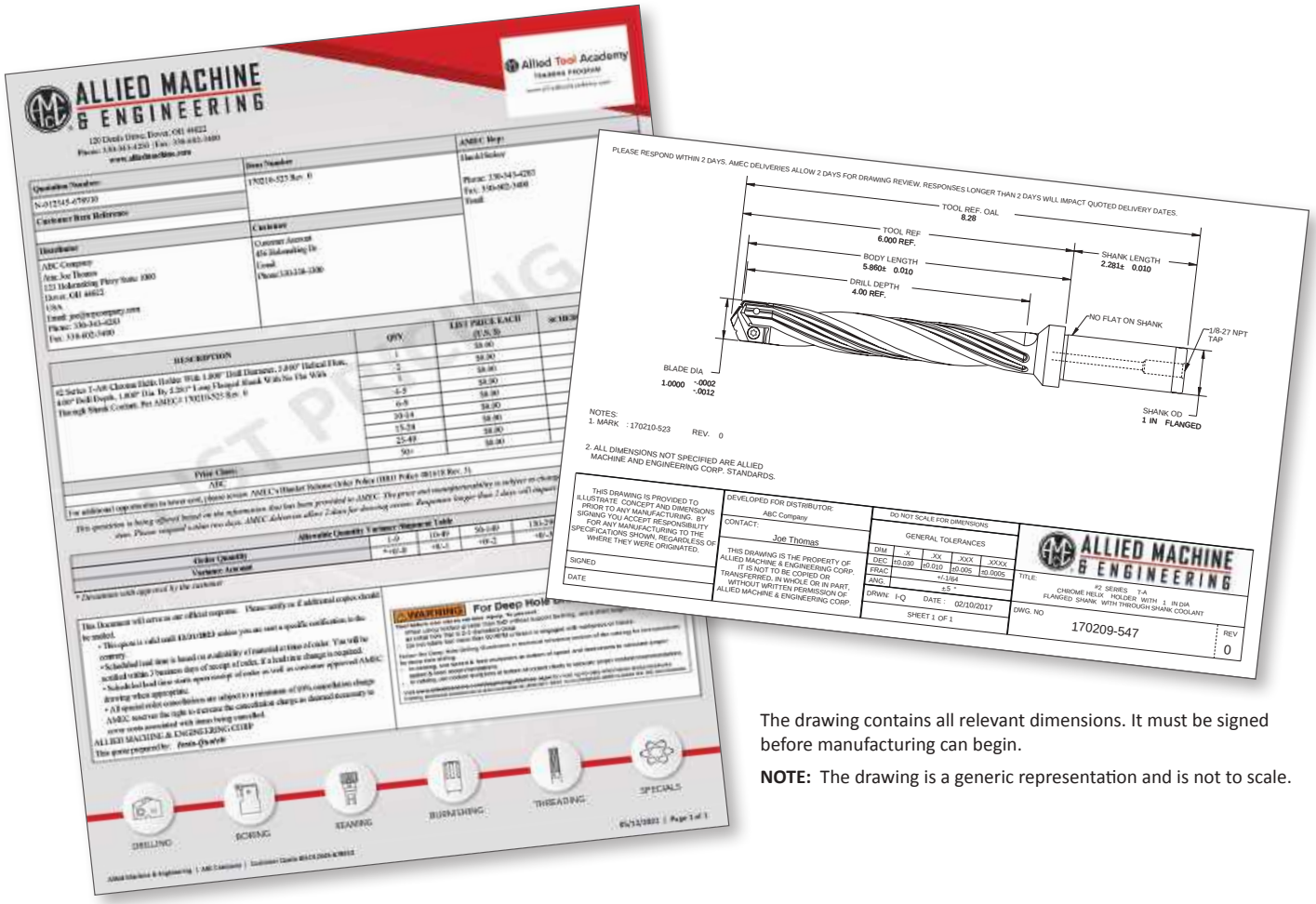

The drawing contains all relevant dimensions. It must be signed before manufacturing can begin.

NOTE: The drawing is a generic representation and is not to scale.

Insta-Quote® | Design Your Custom Tooling

Insta-Quote® Custom Tooling

T-A® Inserts

Special Angle

Double Angle

Spur Point

Spot and Chamfer

Step Insert

Flat Bottom

Ball Nose

Insta-Quote®

Additional Features

Insta-Quote provides multiple options to enhance different areas of the insert. If you have questions about which options would most benefit your application, just give us a call. We'll be happy to provide in-depth explanations about how certain options can optimize your results.

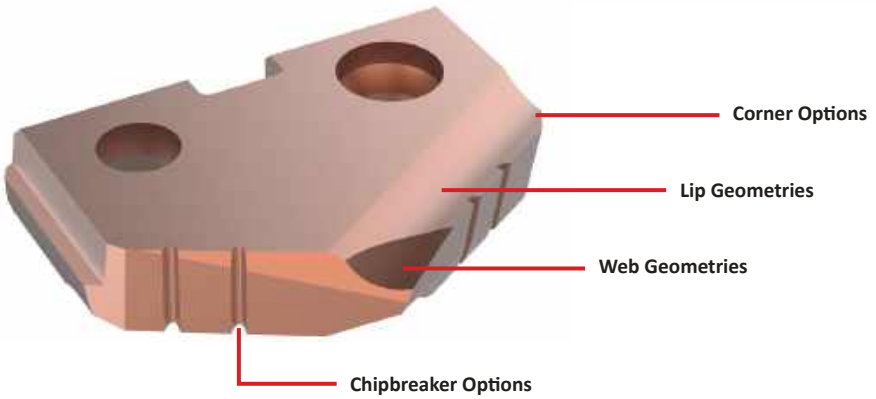

Substrate Options
HSS: HSS, Super Cobalt, Premium Cobalt **Carbide:** C1, C2, C3, C5

Coating Options			
AM200®	**TiN**	**TiAlN**	**TiCN**

Insta-Quote® Custom Tooling

T-A® Holders

Chrome Helix

Chrome Bushing

⚠ Guided Holder

One Step ICS

Two Step ICS

Three Step ICS

⚠ Special Length

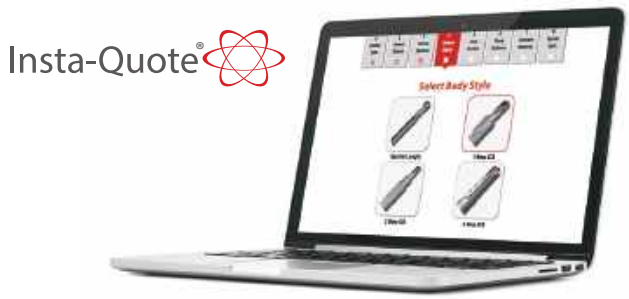

Additional Features

Insta-Quote provides multiple options to enhance different parts of the holder. If you have questions about which options would most benefit your application, just give us a call. We'll be happy to provide in-depth explanations about how certain options can optimize your results.

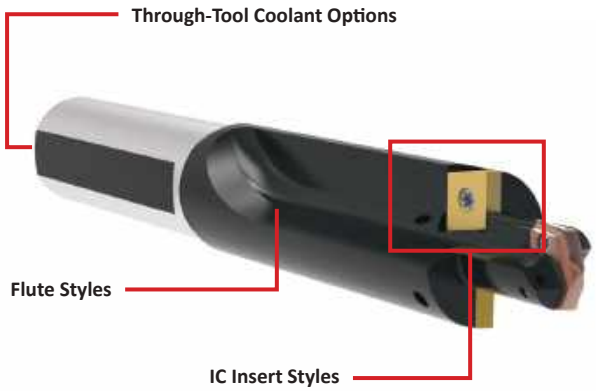

⚠ **WARNING** Refer to Speed and Feed charts for recommended adjustments to speeds and feeds. Refer to page X: 26 for deep hole drilling guidelines in this section of the catalog. Visit **www.alliedmachine.com/DeepHoleGuidelines** for the most up-to-date information and procedures. Factory technical assistance is available for your specific applications through our Application Engineering Team.

Insta-Quote® Custom Tooling

GEN3SYS® XT Holders

Chrome Helix

Chrome Bushing

⚠ Special Length

One Step ICS

Two Step ICS

Three Step ICS

Insta-Quote®

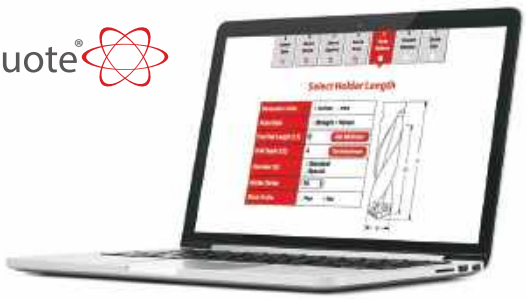

Additional Features

Insta-Quote provides multiple options to enhance different parts of the holder. If you have questions about which options would most benefit your application, just give us a call. We'll be happy to provide in-depth explanations about how certain options can optimize your results.

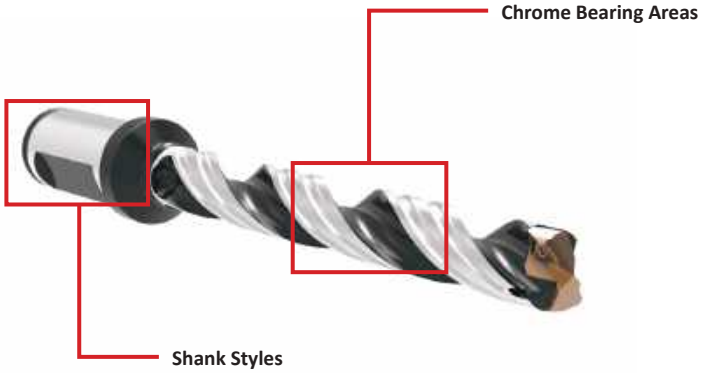

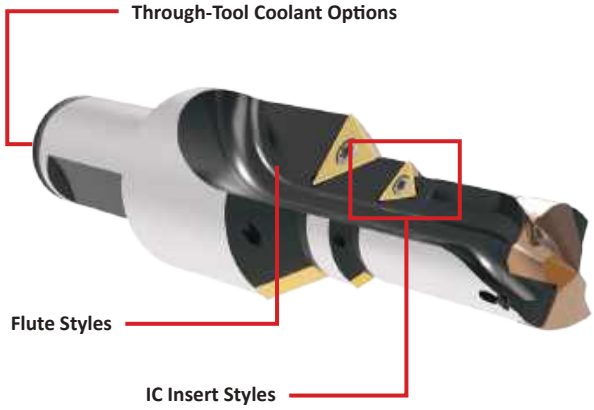

Where are the Inserts?

Though Insta-Quote incorporates special designs for GEN3SYS XT holders, it does not include options for designing special GEN3SYS XT inserts. GEN3SYS XT holders utilize standard GEN3SYS XT inserts, which can be found in Section A20 of the product catalog.

If you need a special insert or would simply like to discuss options for designing one to fit your application, please contact us, and we can create a special design as an engineered special.

Engineered Special
GEN3SYS XT insert designed for specific aerospace application

⚠ **WARNING** Refer to Speed and Feed charts for recommended adjustments to speeds and feeds. Refer to page X: 26 for deep hole drilling guidelines in this section of the catalog. Visit **www.alliedmachine.com/DeepHoleGuidelines** for the most up-to-date information and procedures. Factory technical assistance is available for your specific applications through our Application Engineering Team.

Insta-Quote® Custom Tooling

ALVAN® Reamers

Use Insta-Quote to Build Your Part Numbers

Insta-Quote can help you find or build the ALVAN® Reamer item numbers you need along with the price and delivery of the items. It can also give you the recondition item and delivery. Just follow the steps, and Insta-Quote will guide you through the process.

Insta-Quote®

Replaceable Head Style

Diameter/Series Options

Expandable Diameter

5000 Series

7000 Series

Fixed Diameter

7000 Series

9000 Series

Flute Options

Straight

Right-Hand Helical

Left-Hand Helical

Coating Options

Uncoated

TiN

TiCN

TiAlN

Alcrona

Hardcut

R coating

T coating

Monobloc Style

Flute Options

Straight

Left-Hand Helical

Coating Options

Uncoated

TiN

TiCN

TiAlN

Alcrona

Hardcut

R coating

T coating

Cutting Ring Style

Flute Options

Straight

Left-Hand Helical

Coating Options

Uncoated

TiN

TiCN

TiAlN

Alcrona

Harcut

R coating

T coating

Engineered Specials

Insert Designs

OUR *SOLUTION*

T-A® PCD Drill Insert

- C3 carbide substrate increases tool life.
- PCD tip is specifically designed for carbon reinforced polymer (CFRP) material.
- Notch Point® geometry, special corner clip, and drill point angle help minimize delamination upon exiting the hole.

YOUR *ADVANTAGE*

Take control of carbon fiber reinforced polymer applications. The T-A PCD drill insert can provide the hole quality you need to produce successful quality parts and reduce scrap.

Polycrystalline Diamond Insert

What allows the polycrystalline diamond (PCD) insert to generate such high success in aerospace carbon fiber is the sharp cutting edge that provides clearance cutting and reduces delamination. The PCD wafers improve the wear resistance.

While other tools encounter massive tearing when exiting the hole in carbon fiber, the PCD insert geometry, along with precise OD corner prep and Notch Point® technology, encounters minimal delamination. This produces a near-perfect, tight tolerance and smooth hole.

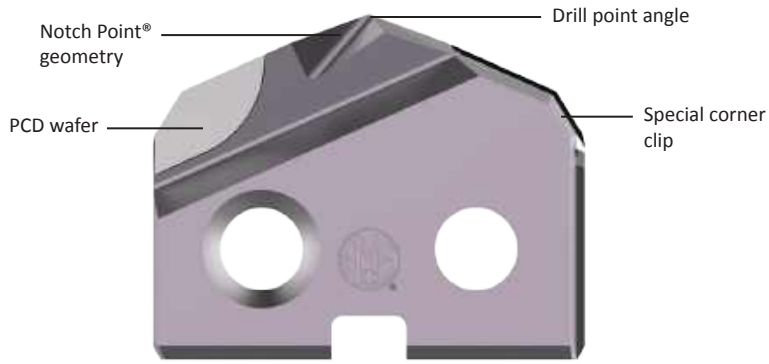

The Proof is in the Numbers

See the following results from a customer who was experiencing difficulty when drilling CFRP material:

INCREASED tool life by **700%**

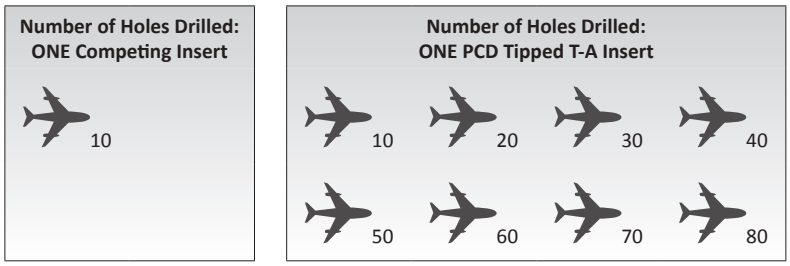

Infinite Solutions

Though Insta-Quote® and i-Form are incredible special tooling systems, some applications require a deeper level of engineering to accomplish the optimal results. No matter what the application may be, Allied Machine engineers have the knowledge, experience, and expertise to design and develop a special product to exceed your expectations.

Engineered Specials are not limited to T-A® or GEN3SYS® XT products. In fact, Engineered Specials can be created for most products offered by Allied Machine, including APX™ Drill, Opening Drill®, AccuThread® 856, Wohlhaupter® boring products, and many other product families.

Back Chamfer without Chip Breakers

Back Chamfer with Chip Breakers

Noncenter Cutting and Chamfer

Special Inverted Coring Geometry

Flat Bottom with Pilot, Corner Radius, and Chamfer

Multiple Step

Special Step

Special Point

Special Counterbore Step

Special Corner Radius

Engineered Specials

Featured Design | GEN3SYS® XT Vacuum Drill

The GEN3SYS XT® Vacuum Drill allows you to reap the productivity benefits of the GEN3SYS® XT outside of a fixed-position machine tool. The Vacuum Drill technology attaches to a hose to remove material that flows up through the internal flute of the drill. This versatile ability allows the drilling process to move from location to location, performing operations on large components.

The design of the GEN3SYS® XT insert increases penetration rates, which can lower your production time and decrease operation costs. Available in multiple material-specific geometries, the GEN3SYS® XT has a solution for most applications.

OUR *SOLUTION*

GEN3SYS® XT Vacuum Drill

- Spent coolant and chips are evacuated through an internal flute.
- Guided body diameter to run through a drill bushing.
- Replaceable tip for quick and easy insert change.

YOUR *ADVANTAGE*

The sealed vacuum system lets you move your drilling operations outside the confines of a machine, allowing you to increase productivity on massive components.

MATERIAL **TIPS**

Drilling in CFRP (Carbon Fiber Reinforced Polymer)

- These applications are run with the vacuum only (no coolant).
- Can be run with or without a micro peck cycle.

Drilling in Metal

- These applications are run with the vacuum and coolant or mist.
- Recommended to be run with a micro peck cycle.

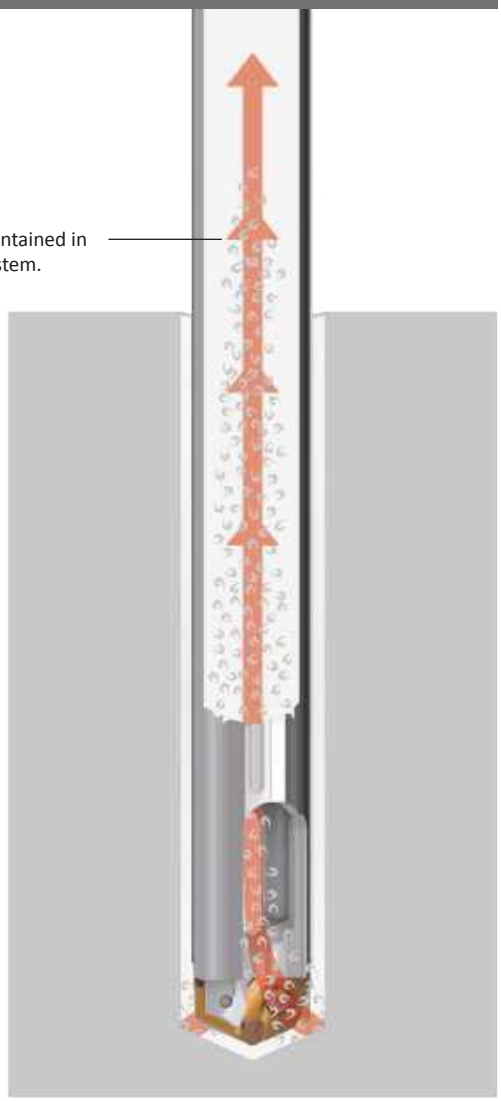

Materials remain contained in a sealed vacuum system.

The same holder can be used for a range of diameters.

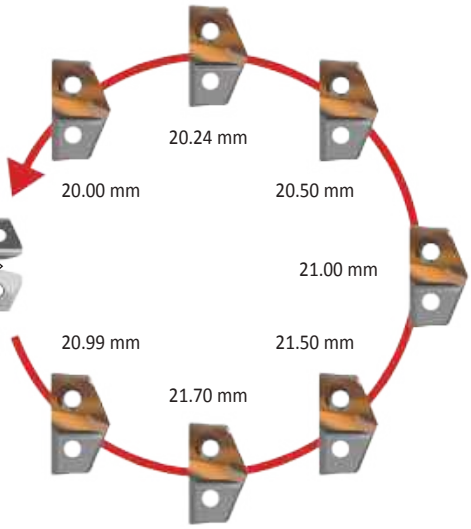

The same holder can be used for different material-specific inserts.

Engineered Specials

Featured Design | Guided T-A®

Guided T-A Highlights

- Two adjustable Torx® PLUS screw pins allow for diameter adjustment to reduce TIR.
- Provides improved tool life and hole finish.
- Guided wear pads improve hole straightness.
- Coolant-through design with multiple coolant outlets along the drill holder provides stability in deep hole drilling applications and also improves chip evacuation.

Industry Application
Automotive

Industry Application
Aerospace

Triple Coolant Outlets

- Additional coolant outlets help keep the holder straight and precise.
- Longer holders experience and maintain increased stability in deeper holes.

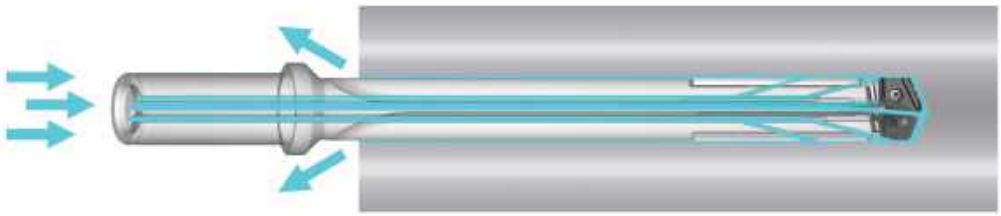

Locate the two adjustable Torx® PLUS screws (one on each side).

Loosen each screw.

Adjust insert position.

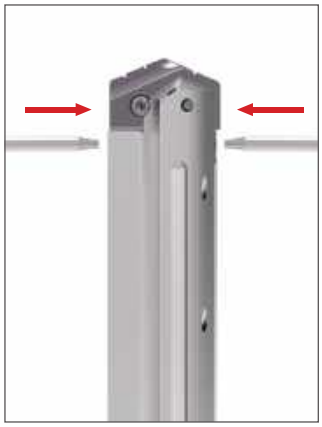

Tighten each screw.

The Proof is in the Numbers

The following results came from a real-life application that utilized the Guided T-A. The customer was experiencing a high scrap rate and needed to find a solution to eliminate the problem.

Number of Holes Drilled:
ONE Competing Insert & Holder

80 | 160 | 240 | 320

Number of Holes Drilled:
ONE Allied Machine Special Insert & Holder

80 | 160 | 240 | 320 | 400 | 480 | 560 | 640 | 720 | 800 | 880 | 960 | 1040 | 1120 | 1220

In this application, Allied Machine:

- Eliminated **$240,000** in scrap per year.
- Optimized the chip formation.
- Enhanced the chip evacuation.
- Provided excellent surface finish.

INCREASED tool life by **280%**

Engineered Specials

Success Stories

Real-Life Results

Below are five brief success stories. Each one provides an overview of specific situations when our special tooling achieved top-quality performance for our customers. For more in-depth case studies, go to **www.alliedmachine.com/RealLifeResults.**

Industry Application
Oil & Gas

Special AccuPort 432® Port Contour Cutter

Hydraulic Manifolds

- Eliminated multiple tools in the process.
- Eliminated regrinds.
- Improved performance in cross hole applications.

Industry Application
Heavy Equipment

Special T-A® Holder & Insert

Axle Shafts

- 100% increase in tool life.
- $7,500 reduction in setup costs.
- Eliminated scrap that was caused by setup issues.

Industry Application
Firearms

i-Form Drill

Barrel Nut

- Eliminated three tools in the process.
- Reduced cycle time by 25%.
- Improved chip formation.

Industry Application
Automotive

T-A® Rim Drill

Aluminum Wheels

- 50% increase in penetration rates.
- 50% increase in tool life.
- Eliminated regrinds.

Industry Application
Aerospace

Special Carbide Clad T-A® Holder with Diamond Coated Insert

Carbon Fiber Landing Arm

- Eliminated delamination of carbon fiber.
- 7x more tool life.
- Special shank threads directly into drill unit for easy tool change.

Engineered Specials

i-Form Custom Indexable Drill / Form Tool System

Any Way You Want It

What if you could utilize complex forms that only seem to be available as brazed or solid carbide tools? Allied Machine's i-Form custom indexable drill/form tool system allows for complex designs with a replaceable cutting edge. This will reduce setup times and eliminate regrinds, allowing you to increase your productivity and reduce costs. Don't settle for being good when the possibility of being great is right in front of you.

This is just a small sample of what you can do.

i-Form Holder with i-Form Inserts

Lug Hole T-A® Drill with i-Form Inserts

i-Form Drill for Facing Operations with ID-OD Chamfer

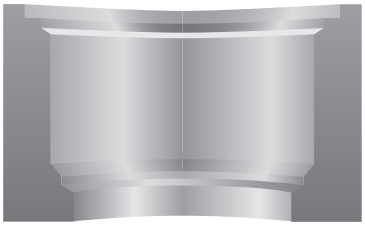

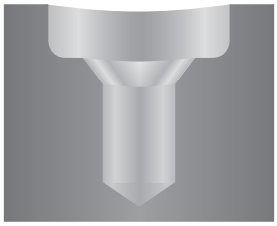

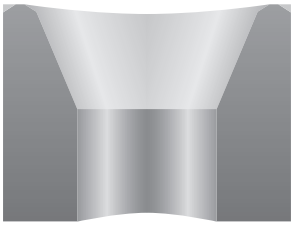

Design Complex Forms for ANY Hole Style

i-Form allows you to design complex forms for any style hole with increased productivity. The i-Form product line - both pilot inserts and form inserts - creates custom engineered forms that provide complex designs with replaceable cutting edges and improved consistency, all while outperforming brazed and solid carbide tooling. i-Form tools will increase your productivity, minimize setup times, and eliminate regrind tool float and inconsistency.

- Holders have coolant-through capabilities.
- Holders can utilize standard inserts, Insta-Quote® inserts, and/or special insert designs.

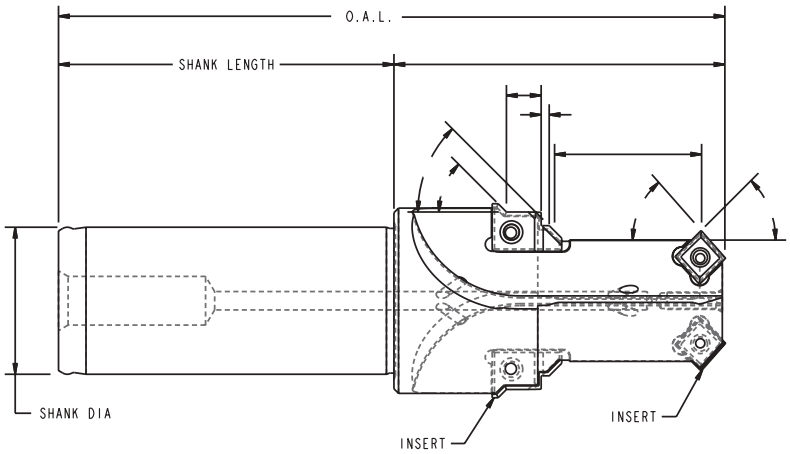

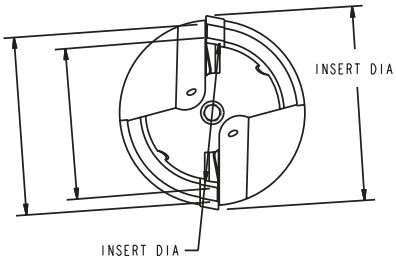

Engineered Specials

i-Form Custom Indexable Drill / Form Tool System

GEN3SYS® XT Pilot Insert with i-Form Inserts

GEN3SYS® XT Pilot Insert with i-Form Inserts

GEN3SYS® XT Back Chamfer Insert with ISO Inserts

T-A® Flat Bottom Form Drill with i-Form Inserts

T-A® ICS Drill with i-Form Inserts

T-A® Pilot Insert with i-Form Inserts

Square QDSI 34™ Inserts with i-Form Inserts

3 Flute IC Drill with i-Form Inserts

i-Form Holder with i-Form Inserts

AccuPort 432® Drill with Special T-A® Form Insert

T-A® 2 Step IC Drill with i-Form Inserts

Special Core Drill with i-Form Inserts

Engineered Specials

Special Designs | T-A® Products

T-A IC Drill
with Back Chamfer Insert

T-A 1 Step Stub Length

T-A IC Drill

T-A 2 Step IC Drill

T-A Counter Bore Tool
with Micro Adjustable Cartridge

T-A Form Drill
with Adjustable Cartridge

T-A Multiple Step Drill
with Adjustable Cartridge

T-A Large Diameter
Multiple Step IC Drill

T-A Deburr Drill

T-A IC Drill
with Customer Defined Shank

T-A Deep Hole Drill
with Customer Defined Design

T-A Chrome Bearing Drill
with Customer Defined Shank

T-A 1 Step IC Drill
with Flat Bottom Insert

T-A Form Drill

T-A Drill
with Special Holder and Insert Design

Engineered Specials

Special Designs | Other Products

Special BT-A Drill with Internal Thread

Special BT-A Drill

Special BT-A Drill

APX™ Drill with Carbide Clad Guides

APX™ Drill with 1 Step Design

APX™ Drill with HSK Shank

Opening Drill® with Special Diameter

Special Core Drill with 2 Step Design

ICS Drill with Adjustable Cartridge

Superion® Solid Carbide with AM200® Coating

AccuThread® 856 with Through Coolant

AccuPort 432® Special Length

ALVAN® Ring Style Reamer with Special Length

GEN3SYS® XT with Morse Taper Shank

GEN3SYS® XT with IC Inserts and Special Body

QDSI 34™ Inserts

80° Diamond | 55° Diamond

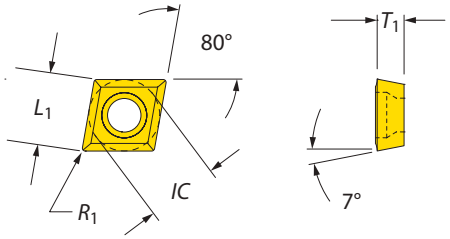

80° Diamond Inserts

Imperial (inch)				Metric (mm)							
IC	L_1	T_1	R_1	*IC*	L_1	T_1	R_1	Part No.	ANSI Designation	Torx Screw	Torx® Driver
0.250	0.249	0.094	0.008	6.35	6.32	2.39	0.20	**CCGT-060202**	CCGT 2(1.5)0.5	7256-IP8-1	8IP-8
0.250	0.247	0.094	0.016	6.35	6.28	2.39	0.40	**CCMT-060204**	CCMT 2(1.5)1	7256-IP8-1	8IP-8
0.250	0.244	0.094	0.031	6.35	6.21	2.39	0.79	**CCMT-060208**	CCMT 2(1.5)2	7256-IP8-1	8IP-8
0.250	0.244	0.156	0.031	6.35	6.21	3.96	0.79	**CCGT-06T308**	CCGT 2(2.5)2	7256-IP8-1	8IP-8
0.375	0.374	0.156	0.008	9.53	9.49	3.96	0.20	**CCGT-09T302**	CCGT 3(2.5)0.5	7359-IP15-1	8IP-15
0.375	0.372	0.156	0.016	9.53	9.46	3.96	0.40	**CCMT-09T304**	CCMT 3(2.5)1	7359-IP15-1	8IP-15
0.375	0.369	0.156	0.031	9.53	9.39	3.96	0.79	**CCMT-09T308**	CCMT 3(2.5)2	7359-IP15-1	8IP-15
0.500	0.497	0.188	0.016	12.70	12.63	4.76	0.40	**CCMT-120404**	CCMT 431	745105-IP20-1	8IP-20
0.500	0.494	0.188	0.031	12.70	12.56	4.76	0.79	**CCMT-120408**	CCMT 432	745105-IP20-1	8IP-20

NOTE: QDSI 34 inserts are utilized only in special ICS holders. Speeds and feeds for QDSI 34 inserts are determined by drill insert.

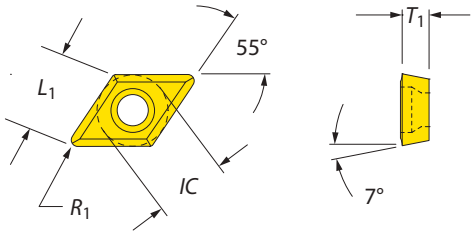

55° Diamond Inserts

Imperial (inch)				Metric (mm)							
IC	L_1	T_1	R_1	*IC*	L_1	T_1	R_1	Part No.	ANSI Designation	Torx Screw	Torx® Driver
0.250	0.243	0.094	0.008	6.35	6.18	2.39	0.008	**DCGT-070202**	DCGT 2(1.5)0.5	7256-IP8-1	8IP-8
0.250	0.237	0.094	0.016	6.35	6.01	2.39	0.016	**DCMT-070204**	DCMT 2(1.5)1	7256-IP8-1	8IP-8
0.250	0.223	0.094	0.031	6.35	5.67	2.39	0.031	**DCMT-070208**	DCMT 2(1.5)2	7256-IP8-1	8IP-8
0.375	0.362	0.156	0.016	9.53	9.19	3.96	0.016	**DCMT-11T304**	DCMT 3(2.5)1	7359-IP15-1	8IP-15
0.375	0.348	0.156	0.031	9.53	8.85	3.96	0.031	**DCMT-11T308**	DCMT 3(2.5)2	7359-IP15-1	8IP-15

NOTE: QDSI 34 inserts are utilized only in special ICS holders. Speeds and feeds for QDSI 34 inserts are determined by drill insert.

QDSI 34™ Inserts

Square | 60° Triangle

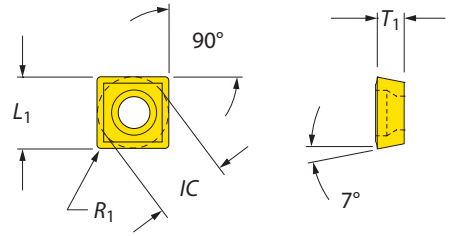

Square Inserts

Imperial (inch)				Metric (mm)				Part No.	ANSI Designation	Torx Screw	Torx® Driver
IC	L_1	T_1	R_1	*IC*	L_1	T_1	R_1				
0.375	0.375	0.156	0.016	9.53	9.53	3.96	0.40	**SCMT-09T304**	SCMT 3(2.5)1	7359-IP15-1	8IP-15

NOTE: QDSI 34 inserts are utilized only in special ICS holders. Speeds and feeds for QDSI 34 inserts are determined by drill insert.

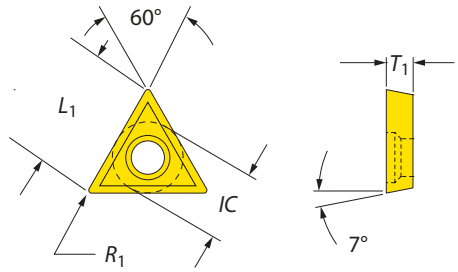

60° Triangle Inserts

Imperial (inch)				Metric (mm)				Part No.	ANSI Designation	Torx Screw	Torx® Driver
IC	L_1	T_1	R_1	*IC*	L_1	T_1	R_1				
0.156	0.259	0.078	0.008	3.97	6.58	1.98	0.20	**TCGT-06T102**	TCGT 1.2(1.2)0.5	724-IP6-1	8IP-6
0.156	0.248	0.078	0.016	3.97	6.29	1.98	0.40	**TCGT-06T104**	TCGT 1.2(1.2)1	724-IP6-1	8IP-6
0.156	0.225	0.078	0.031	3.97	5.71	1.98	0.79	**TCGT-06T108**	TCGT 1.2(1.2)2	724-IP6-1	8IP-6
0.219	0.367	0.094	0.008	5.65	9.33	2.39	0.20	**TCGT-090202**	TCGT 1.8(1.5)0.5	7225-IP7-1	8IP-7
0.219	0.356	0.094	0.016	5.65	9.04	2.39	0.40	**TCGT-090204**	TCGT 1.8(1.5)1	7225-IP7-1	8IP-7
0.219	0.333	0.094	0.031	5.65	8.46	2.39	0.79	**TCGT-090208**	TCGT 1.8(1.5)2	7225-IP7-1	8IP-7
0.250	0.422	0.094	0.008	6.35	10.71	2.39	0.20	**TCGT-110202**	TCGT 2(1.5)0.5	7256-IP8-1	8IP-8
0.250	0.410	0.094	0.016	6.35	10.42	2.39	0.40	**TCMT-110204**	TCMT 2(1.5)1	7256-IP8-1	8IP-8
0.250	0.387	0.094	0.031	6.35	9.84	2.39	0.79	**TCMT-110208**	TCMT 2(1.5)2	7256-IP8-1	8IP-8
0.375	0.627	0.156	0.016	9.53	15.92	3.96	0.40	**TCMT-16T304**	TCMT 3(2.5)1	7359-IP15-1	8IP-15
0.375	0.604	0.156	0.031	9.53	15.34	3.96	0.79	**TCMT-16T308**	TCMT 3(2.5)2	7359-IP15-1	8IP-15
0.500	0.820	0.188	0.031	12.70	20.83	4.76	0.79	**TCGT-220408**	TCGT 432	745105-IP20-1	8IP-20

NOTE: QDSI 34 inserts are utilized only in special ICS holders. Speeds and feeds for QDSI 34 inserts are determined by drill insert.

Special Tooling

Complete Your Design

Show Us What You Need

These pages have been included so you can assist us with defining your special tooling requirements.

- Select a Shank (1 - 6), or define Shank 7.
- Indicate if the shank will be used with or without a Rotary Coolant Adapter (RCA).

We ask that you define your hole profile and offer an example of a tool form to help us with the design process. Tools 1 - 5 cover only a small portion of our capabilities, so feel free to use your imagination. Please scan these pages, record your information in the boxes on the next page, and email the information for our quickest response.

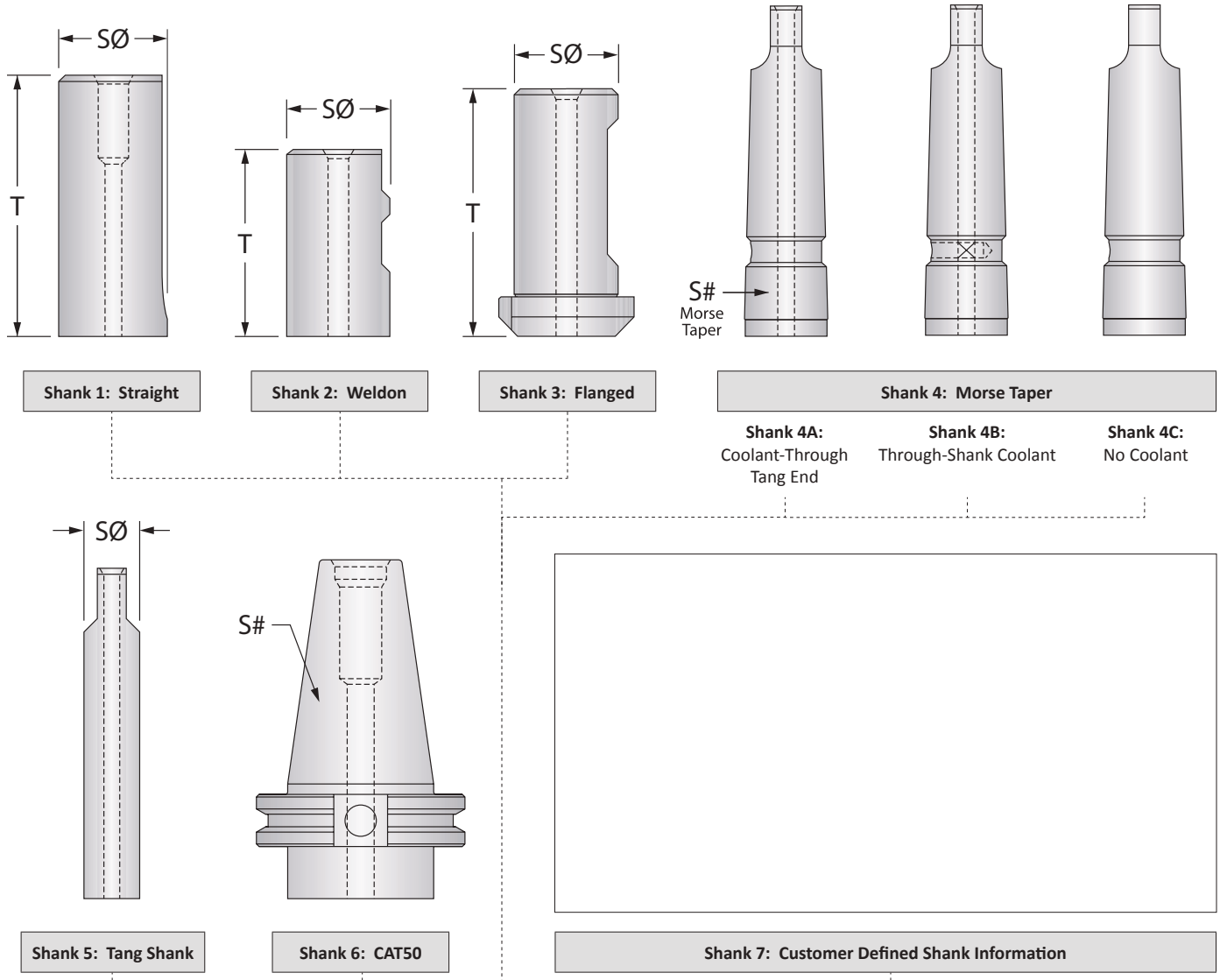

Shank	SØ	S#	T	RCA
4A (EXAMPLE)	–	4MT	–	YES / NO
				YES / NO
				YES / NO
				YES / NO

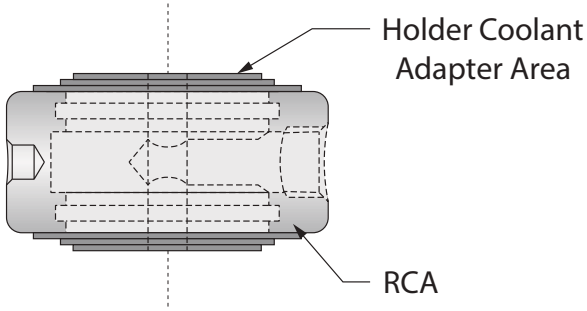

Tool 1

- ☐ Carbide Clad
- ☐ Chrome Plate
- ☐ Helical Flute
- ☐ Straight Flute

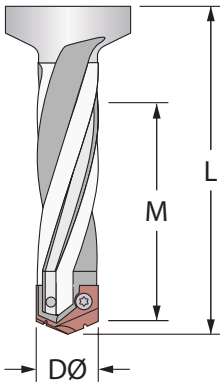

Tool 2

- ☐ Helical Pilot
- ☐ Chrome Pilot

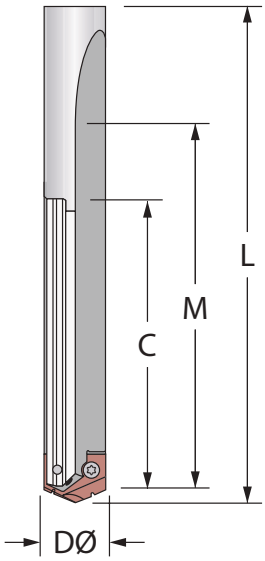

Tool 3

- ☐ Helical Flute
- ☐ Straight Flute

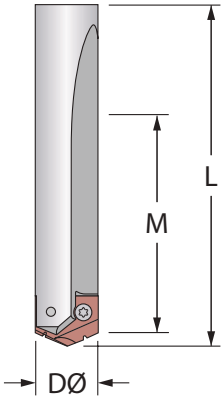

Tool 4

- ☐ Helical Pilot
- ☐ Chrome Pilot

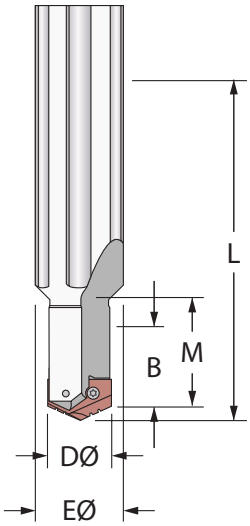

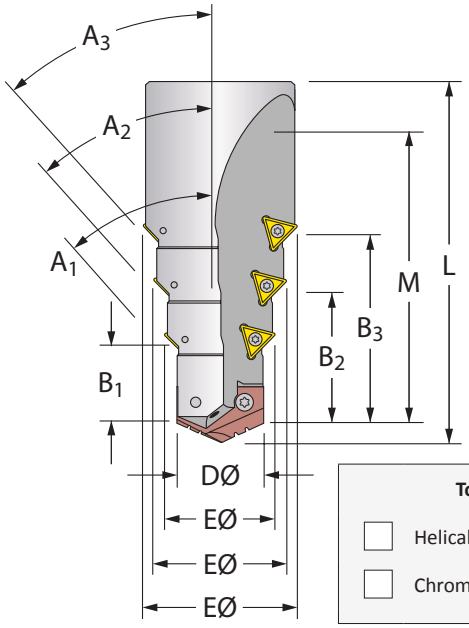

Tool 5

- ☐ Helical Pilot
- ☐ Chrome Pilot

Hole Profile

Please email or fax your design to:
Application Engineering Department
P: 800.321.5537 | F: 330.343.7666 | E: appeng@alliedmachine.com

Item	Tool	A_1	A_2	A_3	B_1	B_2	B_3	C	D Ø	E Ø	F Ø	G	L	M
EXAMPLE	5	30°	–	–	1.00	–	–	0.25	0.620	1.25	–	–	4.50	3.00

Name:		Company:
Email:	Phone:	Distributor (if known):
Customer Signature:		Date:

Please be sure to include shank and coolant information from the previous page when sending tool designs.

Deep Hole Drilling Guidelines

For Lengths Greater Than 9xD (including Extended, Long, XL, 3XL, and Special Length)

1. Pilot Hole
100 % RPM
100% IPR (mm/rev)

Establish the pilot hole using the same diameter short drill to a depth of 2xD minimum.
Utilize a pilot drill with the same or larger included point angle.

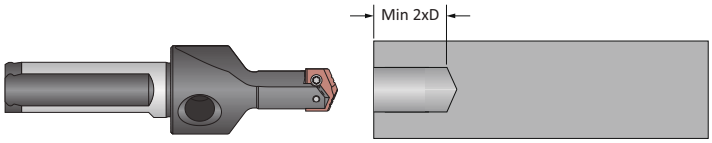

Coolant ON

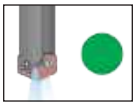

2. Feed-in
50 RPM max
12 IPM (300 mm/min)

Feed the longer drill within 1/16" (1.5 mm) short of the established pilot hole bottom at a **maximum of 50 RPM** and 12 IPM (300 mm/min) feed rate.

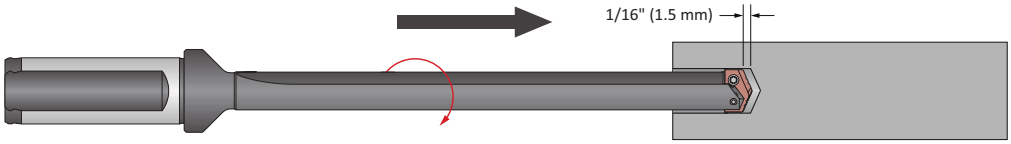

Coolant OFF

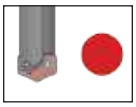

3. Deep Hole Transition Drilling
50 % RPM
75% IPR (mm/rev)

Drill additional 1xD past the bottom of the pilot hole at 50% reduction of recommended speed and 25% reduction of recommended feed.
Mimimum of 1 second dwell is required to meet full speed before feeding.

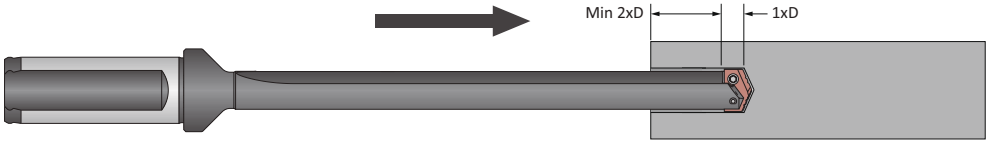

Coolant ON

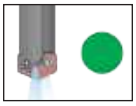

4. Deep Hole Drilling - Blind
100% RPM
100% IPR (mm/rev)

Drill to full depth at recommended speed and feed for longer drill according to Allied speed and feed charts.
No peck cycle recommended.

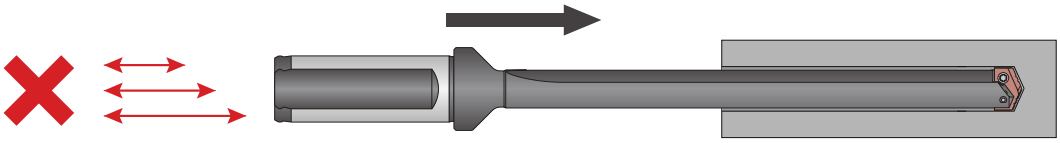

Coolant ON

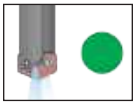

5. Deep Hole Drilling - at Breakout
50% RPM
75% IPR (mm/rev)

For through holes only:
Reduce speed by 50% and feed by 25% prior to breakout.
Do not break out more than 1/8" (3 mm) past the full diameter of the drill.

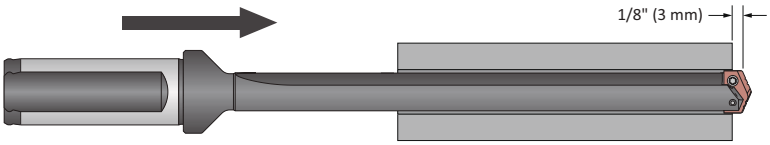

Coolant ON

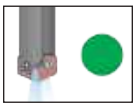

6. Drill Retract
50 RPM max

Reduce speed to a **maximum of 50 RPM** before retracting from the hole.

Coolant OFF

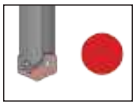

⚠ WARNING **Tool failure can cause serious injury. To prevent:**
- When using holders without support bushing, use a short holder to establish an initial hole that is a minimum of 2 diameters deep.
- Do not rotate tool holders more than 50 RPM unless it is engaged with the workpiece or fixture.

Visit **www.alliedmachine.com/DeepHoleGuidelines** for the most up-to-date information and procedures. Factory technical assistance is available for your specific applications through our Application Engineering Team.

Notes

Part No.	Page
0	
02B.40...	C: 62
02B.45...	C: 62
02B.50...	C: 62
0050GA...	B20: 4, B20: 10
0060GA...	B20: 4, B20: 10
0080GA...	B20: 4, B20: 10
0100GA...	B20: 4, B20: 10
0110GA...	B20: 4, B20: 10
0120HA...	B20: 4, B20: 10
0140HA...	B20: 4, B20: 10
0160HA...	B20: 4, B20: 10
0180HA...	B20: 4, B20: 10
0200HA...	B20: 4, B20: 10
0250B...	B20: 5, B20: 11, B20: 26, B20: 29, B20: 33
0312B...	B20: 5, B20: 11, B20: 26, B20: 29, B20: 33
0365HM...	B20: 5, B20: 26, B20: 29
0375B...	B20: 5, B20: 11, B20: 26, B20: 29, B20: 33
0425BHM...	B20: 33
0437B...	B20: 5, B20: 11, B20: 26, B20: 29, B20: 33
0500B...	B20: 5, B20: 11, B20: 26, B20: 29
0500BCH...	B20: 30
0500D...	B20: 33, B20: 37, B20: 41
0550BHM...	B20: 5, B20: 26, B20: 29, B20: 33
0625BCS...	B20: 5, B20: 27, B20: 29, B20: 34
0688CHM...	B20: 33
0750D...	B20: 33, B20: 37, B20: 41
0750DCH...	B20: 35
0832DHM...	B20: 33, B20: 37, B20: 41
0875DCS...	B20: 34, B20: 38, B20: 42
1	
1000D...	B20: 33, B20: 37, B20: 41
1000ECH...	B20: 39
1250D...	B20: 33, B20: 37, B20: 41
1500FCH...	B20: 43
1021A...	A40: 6
1021N...	A40: 6
1021T...	A40: 6
1022A...	A40: 8
1022N...	A40: 8
1022T...	A40: 8
1023A...	A40: 10
1023N...	A40: 10
1023T...	A40: 10
10244...	A40: 14
1024U...	A40: 25
10254...	A40: 16
1025U...	A40: 25
10264...	A40: 18
10265...	A40: 18
1026U...	A40: 25
10274...	A40: 20
1027U...	A40: 25
10284...	A40: 22
1028U...	A40: 25
10294...	A40: 23
10414...	A40: 6
10424...	A40: 8
10434...	A40: 11
10444...	A40: 14
10454...	A40: 16
10474...	A40: 20
10484...	A40: 22
11214...	A40: 6
11224...	A40: 8
11234...	A40: 11
11244...	A40: 14
11254...	A40: 16
11264...	A40: 18
131...	A30: 48, A30: 49
132...	A30: 63, A30: 64
135...	A30: 95
136...	A30: 97
137...	A30: 103
138...	A30: 105
150...	A30: 34, A30: 35, A91: 6, A92: 19, A92: 21, A92: 23, A92: 25, A92: 27
151...	A30: 46, A30: 47, A30: 48, A91: 10, A92: 19, A92: 21, A92: 23, A92: 25, A92: 27
152...	A30: 61, A30: 62, A30: 63, A91: 14, A92: 19, A92: 21, A92: 23, A92: 25, A92: 27
153...	A30: 77, A30: 78, A30: 79, A91: 18
154...	A30: 88, A30: 89
155...	A30: 95
156...	A30: 97
157...	A30: 103
158...	A30: 105
15Y...	A30: 14, A30: 15, A92: 19, A92: 21, A92: 23, A92: 25, A92: 27
15Z...	A30: 24, A30: 25, A92: 19, A92: 21, A92: 23, A92: 25, A92: 27
180...	A30: 33
181...	A30: 45
182...	A30: 59
18Y...	A30: 13
18Z...	A30: 23
1C20...	A30: 36
1C21...	A30: 50
1C22...	A30: 65, A30: 66
1C23...	A30: 80
1C2Y...	A30: 16
1C2Z...	A30: 26
1C30...	A30: 37
1C31...	A30: 51
1C32...	A30: 67
1C3Y...	A30: 17
1C3Z...	A30: 27
1C50...	A30: 37
1C51...	A30: 51
1C52...	A30: 67
1C53...	A30: 81, A92: 7, A92: 9, A92: 11, A92: 13, A92: 15
1C5Y...	A30: 17
1C5Z...	A30: 27
1N20...	A30: 37
1N21...	A30: 51
1N22...	A30: 67
1N2Y...	A30: 17
1N2Z...	A30: 27
2	
2AAC-ST...	C: 38, C: 39
2ACC-ST...	C: 38, C: 39
2ALH-ST...	C: 38, C: 39
2ALK-ST...	C: 38, C: 39
2ALR-ST...	C: 38, C: 39
2ALT-ST...	C: 38, C: 39
2ANC-ST...	C: 38, C: 39
2AVC-ST...	C: 38, C: 39
2TIA-KT...	C: 38, C: 39
2TIC-KT...	C: 38, C: 39
2TIN-KT...	C: 38, C: 39
2TLH-KT...	C: 38, C: 39
2TLK-KT...	C: 38, C: 39
2TLR-KT...	C: 38, C: 39
2TLT-KT...	C: 38, C: 39
2000-CO...	C: 41, C: 43, C: 45, C: 47, C: 49, C: 51, C: 53, C: 55, C: 57, C: 59
2000-DA...	C: 41, C: 45, C: 49, C: 53, C: 57
2000-GH...	C: 41, C: 45, C: 49, C: 53, C: 57
2000-KT...	C: 38, C: 39
2010-AC...	C: 41, C: 45, C: 49, C: 53, C: 57
2060-BU...	C: 53
2431...	C: 33
2441...	C: 30
20231...	A40: 12
20241...	A40: 15
20251...	A40: 17
20261...	A40: 19
20411...	A40: 7
20421...	A40: 9
20431...	A40: 12
20441...	A40: 15
20451...	A40: 17
20461...	A40: 19
20611...	A40: 7
20621...	A40: 9
20631...	A40: 12
20641...	A40: 15
20651...	A40: 17
20661...	A40: 19
20671...	A40: 21
20681...	A40: 24
20811...	A40: 7
20821...	A40: 9
20831...	A40: 12
20841...	A40: 15
20851...	A40: 17
20861...	A40: 19
20871...	A40: 21
20881...	A40: 24
21000...	A30: 38, A30: 42
21005...	A30: 38
21010...	A30: 52
21011...	A40: 7
21015...	A30: 52
21020...	A30: 68
21021...	A40: 9
21025...	A30: 68
21030...	A30: 82
21031...	A40: 12
21041...	A40: 15
21051...	A40: 17
21061...	A40: 19
210Y0...	A30: 18, A30: 21
210Z0...	A30: 28, A30: 31
21411...	A40: 7
21421...	A40: 9
21431...	A40: 13
21441...	A40: 15
21451...	A40: 17
21461...	A40: 19
21471...	A40: 21
21481...	A40: 24
21511...	A40: 7
21521...	A40: 9
21531...	A40: 13
21541...	A40: 15
21551...	A40: 17
21561...	A40: 19
21571...	A40: 21
21611...	A40: 7
21621...	A40: 9
21631...	A40: 13
21641...	A40: 15
21651...	A40: 17
21661...	A40: 19
21671...	A40: 21
21681...	A40: 24
21811...	A40: 7
21821...	A40: 9
21831...	A40: 13
21841...	A40: 15
21851...	A40: 17
21861...	A40: 19
21871...	A40: 21
21881...	A40: 24
22000...	A30: 38, A30: 40, A30: 42, A91: 8
22005...	A30: 38, A30: 40, A30: 42, A91: 8
22010...	A30: 52, A30: 54, A30: 56, A91: 12
22011...	A40: 7
22015...	A30: 52, A30: 54, A30: 56, A91: 12
22020...	A30: 68, A30: 70, A30: 72, A91: 16
22021...	A40: 9
22025...	A30: 68, A30: 70, A30: 72, A91: 16
22030...	A30: 82, A30: 84, A30: 85, A91: 20
22031...	A40: 13
22040...	A30: 90, A30: 91, A30: 92
22041...	A40: 15
22050...	A30: 98, A30: 99, A30: 100
22051...	A40: 17
22061...	A40: 19
22070...	A30: 106, A30: 107, A30: 108
22071...	A40: 21
22081...	A40: 24
220Y0...	A30: 18, A30: 20, A30: 21
220Z0...	A30: 28, A30: 30, A30: 31
22211...	A40: 7
22221...	A40: 9
22231...	A40: 13
22241...	A40: 15
22261...	A40: 19
22271...	A40: 21
22281...	A40: 24
23010...	A30: 52, A30: 53, A30: 54, A30: 55, A30: 56
23015...	A30: 52, A30: 53, A30: 54, A30: 55, A30: 56
23020...	A30: 68, A30: 69, A30: 70, A30: 71, A30: 72
23025...	A30: 68, A30: 69, A30: 70, A30: 71, A30: 72
23030...	A30: 82, A30: 83, A30: 84, A30: 85
24000...	A30: 38, A30: 39, A30: 40, A30: 41, A30: 42, A91: 9
24005...	A30: 38, A30: 39, A30: 40, A30: 41, A30: 42, A91: 9
24010...	A30: 52, A30: 53, A30: 54, A30: 55, A30: 56, A91: 13

Part No.	Page
24015...	A30: 52, A30: 53, A30: 54, A30: 55, A30: 56, A91: 13
24020...	A30: 68, A30: 69, A30: 70, A30: 71, A30: 72, A91: 17
24025...	A30: 68, A30: 69, A30: 70, A30: 71, A30: 72, A91: 17
24030...	A30: 82, A30: 83, A30: 84, A30: 85, A91: 20
24040...	A30: 90, A30: 91, A30: 92
24050...	A30: 98, A30: 99, A30: 100
24070...	A30: 106, A30: 107, A30: 108
240Y0...	A30: 18, A30: 19, A30: 20, A30: 21
240Z0...	A30: 28, A30: 29, A30: 30, A30: 31
24500...	A30: 39
24510...	A30: 53
245Y0...	A30: 19
245Z0...	A30: 29
25000...	A30: 38, A30: 39, A30: 40, A30: 41, A30: 42, A91: 9
25005...	A30: 38, A30: 39, A30: 40, A30: 41, A30: 42, A91: 9
25010...	A30: 52, A30: 53, A30: 54, A30: 55, A30: 56, A91: 13
25015...	A30: 52, A30: 53, A30: 54, A30: 55, A30: 56, A91: 13
25020...	A30: 68, A30: 69, A30: 70, A30: 71, A30: 72, A91: 17
25025...	A30: 68, A30: 69, A30: 70, A30: 71, A30: 72
25030...	A30: 82, A30: 84, A30: 85
25040...	A30: 90, A30: 91, A30: 92
25050...	A30: 98, A30: 99, A30: 100
25070...	A30: 106, A30: 107, A30: 108
250Y0...	A30: 18, A30: 19, A30: 20, A30: 21
250Z0...	A30: 28, A30: 29, A30: 30, A30: 31
26000...	A30: 39, A30: 41, A30: 42
26005...	A30: 39, A30: 41, A30: 42
26010...	A30: 53, A91: 13
26015...	A91: 13
26020...	A30: 69, A91: 17

Part No.	Page
260Z0...	A30: 29
26500...	A30: 39
27000...	A30: 38, A30: 42
27010...	A30: 52, A30: 56
27020...	A30: 68, A30: 72
27030...	A30: 82, A30: 84, A30: 85
27040...	A30: 90, A30: 91, A30: 92
27050...	A30: 99, A30: 100
27070...	A30: 107, A30: 108
270Y0...	A30: 18, A30: 21
270Z0...	A30: 28, A30: 31
29000...	A30: 38, A30: 42
29010...	A30: 52, A30: 56
29020...	A30: 68, A30: 72
29030...	A30: 82, A30: 84, A30: 85
29040...	A30: 90, A30: 91, A30: 92
29050...	A30: 99, A30: 100
29070...	A30: 107, A30: 108
290Y0...	A30: 18, A30: 21
290Z0...	A30: 28, A30: 31
2T-2SR...	A30: 21, A30: 31, A30: 43, A30: 110
2T-3SR...	A30: 57, A30: 73, A30: 110
2T-4SR...	A30: 73, A30: 85, A30: 93, A30: 110, A40: 7, A40: 9, A40: 13, A40: 15, A40: 27
2T-5SR...	A30: 85, A30: 93, A30: 110, A40: 9, A40: 13, A40: 15, A40: 27
2T-6SR...	A30: 101, A30: 109, A30: 110, A40: 17, A40: 19, A40: 21, A40: 24, A40: 27
2T-55SR...	A40: 24, A40: 27
3	
30.50R...	C: 66
30.63R...	C: 66
30.80R...	C: 66
35.50R...	C: 67
35.63R...	C: 67
3610...	C: 30, C: 31, C: 32, C: 33, C: 34, C: 35
3617...	C: 35
3620...	C: 31
3627...	C: 32
4	
4T-05T203...	A55: 12, A55: 13, A91: 46, A91: 47
4T-06T204...	A55: 14, A55: 15, A91: 48, A91: 49
4T-09T306...	A55: 18, A55: 19, A55: 20, A55: 21, A91: 52, A91: 53
4T-11T306...	A55: 22, A55: 23,

Part No.	Page
	A55: 24, A55: 25, A91: 54, A91: 55
4T-030203...	A55: 8, A55: 9, A91: 44
4T-040203...	A55: 10, A55: 11, A91: 45
4T-070305...	A55: 16, A55: 17, A91: 50, A91: 51
4T-140408...	A55: 26, A55: 27, A55: 28, A55: 29, A91: 56, A91: 57
40.50R...	C: 67
40.63R...	C: 67
4001-AC...	C: 43, C: 47, C: 51, C: 55, C: 59
4001-CH...	C: 43, C: 47, C: 51, C: 55, C: 59
4001-GH...	C: 55
4300-MC...	C: 56, C: 57
4305-MC...	C: 58, C: 59
4330-MC...	C: 48, C: 49
4335-MC...	C: 50, C: 51
4350-MA...	C: 53
4350-MC...	C: 52, C: 53
4355-FL...	C: 53, C: 55
4355-MA...	C: 55
4355-MC...	C: 54, C: 55
4500A-MC...	C: 44, C: 45
4500-MC...	C: 44, C: 45
4505A-MC...	C: 46, C: 47
4505-MC...	C: 46, C: 47
4550A-MC...	C: 40, C: 41
4550-MC...	C: 40, C: 41
4555A-MC...	C: 42, C: 43
4555-MC...	C: 42, C: 43
434...	A30: 87
435...	A30: 94
436...	A30: 96
437...	A30: 102
438...	A30: 104
450...	A30: 32, A91: 7, A92: 7, A92: 9, A92: 11, A92: 13, A92: 15, A92: 17, A92: 18, A92: 20, A92: 22, A92: 24, A92: 26, A92: 28
451...	A30: 44, A91: 11, A92: 7, A92: 9, A92: 11, A92: 13, A92: 15, A92: 17, A92: 18, A92: 20, A92: 22, A92: 24, A92: 26, A92: 28
452...	A30: 58, A91: 15, A92: 7, A92: 9, A92: 11, A92: 13, A92: 15, A92: 17, A92: 18, A92: 20, A92: 22, A92: 24, A92: 26, A92: 28
453...	A30: 75, A91: 19, A92: 7, A92: 9,

Part No.	Page
	A92: 11, A92: 15, A92: 17, A92: 18, A92: 19, A92: 20, A92: 21, A92: 23, A92: 25, A92: 26, A92: 27, A92: 28
454...	A30: 86, A92: 7, A92: 9, A92: 11, A92: 13, A92: 15, A92: 17, A92: 18, A92: 19, A92: 20, A92: 21, A92: 22, A92: 23, A92: 24, A92: 25, A92: 26, A92: 27, A92: 28
455...	A30: 94
456...	A30: 96
457...	A30: 102
458...	A30: 104
45Y...	A30: 12, A92: 7, A92: 9, A92: 11, A92: 13, A92: 15, A92: 17, A92: 18, A92: 20, A92: 22, A92: 24, A92: 26, A92: 28
45Z...	A30: 22, A92: 7, A92: 9, A92: 11, A92: 13, A92: 15, A92: 17, A92: 18, A92: 20, A92: 22, A92: 24, A92: 26, A92: 28
483...	A30: 74, A30: 76
4C10...	A30: 32, A91: 7, A92: 7, A92: 9, A92: 11, A92: 13, A92: 15
4C11...	A30: 44, A91: 11, A92: 7, A92: 9, A92: 11, A92: 13, A92: 15
4C12...	A30: 58, A91: 15, A92: 7, A92: 9, A92: 11, A92: 13, A92: 15
4C1Y...	A30: 12, A92: 7, A92: 9, A92: 11, A92: 13, A92: 15
4C1Z...	A30: 22, A92: 7, A92: 9, A92: 11, A92: 15
4C20...	A30: 32, A92: 17
4C21...	A30: 44, A92: 17
4C22...	A30: 58, A92: 17
4C2Y...	A30: 12, A92: 17
4C2Z...	A30: 22, A92: 17
5	
5000-MC...	C: 26
5000-ML...	C: 26
5000-MM...	C: 26
5400...	C: 25
5401...	C: 25

Part No.	Page
5600...	C: 25
5700...	C: 25
6	
60111C45...	A20: 15
60111H...	A20: 15
60112C45...	A20: 19
60112H...	A20: 19
60113C45...	A20: 23
60113H...	A20: 23
60114C45...	A20: 27
60114H...	A20: 27
60115C45...	A20: 31
60115H...	A20: 31
60116C45...	A20: 35
60116H...	A20: 35
60117C45...	A20: 39
60117H...	A20: 39
60118C45...	A20: 43
60118H...	A20: 43
60120C45...	A20: 47
60120H...	A20: 47
60122C45...	A20: 51
60122H...	A20: 51
60124C45...	A20: 55
60124H...	A20: 55
60126C45...	A20: 59
60126H...	A20: 59
60129C45...	A20: 63
60129H...	A20: 63
60132C45...	A20: 67
60132H...	A20: 67
60311H...	A20: 15
60311S...	A20: 15
60312H...	A20: 19
60312S...	A20: 19
60313H...	A20: 23
60313S...	A20: 23
60314H...	A20: 27
60314S...	A20: 27
60315H...	A20: 31
60315S...	A20: 31
60316H...	A20: 35
60316S...	A20: 35
60317H...	A20: 39
60317S...	A20: 39
60318H...	A20: 43
60318S...	A20: 43
60320H...	A20: 47
60320S...	A20: 47
60322H...	A20: 51
60322S...	A20: 51
60324H...	A20: 55
60324S...	A20: 55
60326H...	A20: 59
60326S...	A20: 59
60329H...	A20: 63
60329S...	A20: 63
60332H...	A20: 67
60332S...	A20: 67
60511H...	A20: 15
60511S...	A20: 15
60512H...	A20: 19
60512S...	A20: 19

Part No.	Page
60513H...	A20: 23
60513S...	A20: 23
60514H...	A20: 27
60514S...	A20: 27
60515H...	A20: 31
60515S...	A20: 31
60516H...	A20: 35
60516S...	A20: 35
60517H...	A20: 39
60517S...	A20: 39
60518H...	A20: 43
60518S...	A20: 43
60520H...	A20: 47
60520S...	A20: 47
60522H...	A20: 51
60522S...	A20: 51
60524H...	A20: 55
60524S...	A20: 55
60526H...	A20: 59
60526S...	A20: 59
60529H...	A20: 63
60529S...	A20: 63
60532H...	A20: 67
60532S...	A20: 67
60711H...	A20: 15
60711S...	A20: 15
60712H...	A20: 19
60712S...	A20: 19
60713H...	A20: 23
60713S...	A20: 23
60714H...	A20: 27
60714S...	A20: 27
60715H...	A20: 31
60715S...	A20: 31
60716H...	A20: 35
60716S...	A20: 35
60717H...	A20: 39
60717S...	A20: 39
60718H...	A20: 43
60718S...	A20: 43
60720H...	A20: 47
60720S...	A20: 47
60722H...	A20: 51
60722S...	A20: 51
60724H...	A20: 55
60724S...	A20: 55
60726H...	A20: 59
60726S...	A20: 59
60729H...	A20: 63
60729S...	A20: 63
60732H...	A20: 67
60732S...	A20: 67
7	
7C111P...	A20: 14
7C112P...	A20: 18
7C113P...	A20: 22
7C114P...	A20: 26
7C115P...	A20: 30
7C116P...	A20: 34
7C117P...	A20: 38
7C118P...	A20: 42
7C120P...	A20: 46
7C122P...	A20: 50

Part No.	Page
7C124P...	A20: 54
7C126P...	A20: 58
7C129P...	A20: 62
7C132P...	A20: 66
7C211P...	A20: 14
7C212P...	A20: 18
7C213P...	A20: 22
7C214P...	A20: 26
7C215P...	A20: 30
7C217P...	A20: 38
7C218P...	A20: 42
7C220P...	A20: 46
7C222P...	A20: 50
7C224P...	A20: 54
7C229P...	A20: 62
7C232P...	A20: 66
7000-MC...	C: 17, C: 19
7000-ML...	C: 17
7000-MM...	C: 18
7000-VI...	C: 15, C: 16
7001-MC...	C: 17
7001-ML...	C: 17
7001-MM...	C: 18
7001-VI...	C: 15, C: 16
7400...	C: 14
7405...	C: 13
7600...	C: 14
7605...	C: 13
7700...	C: 14
7705...	C: 13
9	
9000-MC...	C: 23
9000-ML...	C: 23
9000-MM...	C: 23
9000-VI...	C: 22
9001-VI...	C: 22
9400...	C: 21
9600...	C: 21
9700...	C: 21
92431...	C: 33
92441...	C: 30
93610...	C: 34
93617...	C: 35
93620...	C: 31
93627...	C: 32
94500A-MC...	C: 44, C: 45
94500-MC...	C: 44, C: 45
94505A-MC...	C: 46, C: 47
94505-MC...	C: 46, C: 47
94550A-MC...	C: 40, C: 41
94550-MC...	C: 40, C: 41
94555A-MC...	C: 42, C: 43
94555-MC...	C: 42, C: 43
A	
AS5202...	A92: 14, A92: 15, A92: 26, A92: 27
ATKK...	A92: 18, A92: 20, A92: 22, A92: 24, A92: 26, A92: 28
ATKU...	A92: 19, A92: 21, A92: 23, A92: 25, A92: 27
ATR14...	C: 62, C: 63, C: 64,

Part No.	Page
	C: 65
ATR18...	C: 62, C: 63, C: 64
ATR23...	C: 64
ATR.41...	C: 64
ATT14...	C: 62, C: 63, C: 64, C: 65
ATT23...	C: 64
B	
BTA0...	A93: 4
BTA1...	A93: 5
BTA2...	A93: 6
BTA3...	A93: 7
BTAT...	A93: 4, A93: 5, A93: 6, A93: 7
BTB.40...	C: 63
BTB.50...	C: 63
BTH...	B20: 4, B20: 5, B20: 10, B20: 26, B20: 29, B20: 33, B20: 34, B20: 37, B20: 38, B20: 41, B20: 42
C	
C34...	A60: 7, A60: 9, A60: 11, A60: 13, A60: 15, A60: 17, A60: 19, A60: 21, A60: 23, A60: 25, A60: 27
CB...	B20: 15, B20: 20, B20: 28, B20: 32, B20: 36, B20: 40
CB038M...	B20: 49, B20: 50
CB050M...	B20: 49, B20: 50
CB076M...	B20: 49, B20: 50
CB1000...	B20: 45
CB1250...	B20: 45
CB1500...	B20: 44, B20: 45, B20: 46, B20: 47
CB2000...	B20: 44, B20: 45, B20: 46, B20: 47
CB2500...	B20: 46
CB2500BMA...	B20: 25
CB3000...	B20: 44, B20: 45, B20: 46, B20: 47
CB6000...	B20: 46
CBS1250B...	B20: 9
CCGT...	X: 22
CCMT...	B20: 13, B20: 16, B20: 23, B20: 27, B20: 31, B20: 35, B20: 39, B20: 43, X: 22
CCMT060202...	B20: 6, B20: 11
CH25...	C: 66
CH32...	C: 66
CH40...	C: 66
CIL.25...	C: 65
CIL.32...	C: 65
CIL.40...	C: 65
D	
D203...	A55: 8, A55: 9,

Part No.	Page
	A91: 44
D204...	A55: 10, A55: 11
D205...	A55: 12, A55: 13
D206...	A55: 14, A55: 15
D207...	A55: 16, A55: 17, A91: 50, A91: 51
D209...	A55: 18, A55: 20
D211...	A55: 22, A55: 24, A91: 54, A91: 55
D214...	A55: 26, A55: 28, A91: 56, A91: 57
D303...	A55: 8, A55: 9, A91: 44
D304...	A55: 10, A55: 11
D305...	A55: 12, A55: 13
D306...	A55: 14, A55: 15
D307...	A55: 16, A55: 17, A91: 50, A91: 51
D309...	A55: 18, A55: 20
D311...	A55: 22, A55: 24, A91: 54, A91: 55
D314...	A55: 26, A55: 27, A55: 28, A55: 29, A91: 56, A91: 57
D403...	A55: 8, A55: 9, A91: 44
D404...	A55: 10, A55: 11
D405...	A55: 12, A55: 13
D406...	A55: 14, A55: 15
D407...	A55: 16, A55: 17, A91: 50, A91: 51
D409...	A55: 19, A55: 21
D411...	A55: 23, A55: 25, A91: 54, A91: 55
D414...	A55: 27, A55: 29, A91: 56, A91: 57
DCGT...	X: 22
DCMT...	X: 22
G	
G1731...	A92: 16, A92: 17, A92: 28
H	
HDTM...	E: 18, E: 19, E: 20, E: 21, E: 22, E: 23, E: 24, E: 25
HDTMNKxNPT...	E: 12
HDTMxBSPP...	E: 11
HDTMxNPT...	E: 12, E: 13
HSKA.63...	C: 64
HSKA.100...	C: 64
HTA0A01...	A25: 20, A25: 22
HTA0A03...	A25: 20, A25: 22, A25: 48
HTA0A05...	A25: 20, A25: 22, A25: 48
HTA0A07...	A25: 20, A25: 22
HTA0A10...	A25: 21, A25: 23
HTA0A12...	A25: 21, A25: 23
HTA0A15...	A25: 21, A25: 23
HTA0B01...	A25: 20, A25: 22
HTA0B03...	A25: 20, A25: 22
HTA0B05...	A25: 20, A25: 22

Part No.	Page
HTA0B07...	A25: 20, A25: 22
HTA0B10...	A25: 21, A25: 23
HTA0B12...	A25: 21, A25: 23
HTA0B15...	A25: 21, A25: 23
HTA0C01...	A25: 20, A25: 22
HTA0C03...	A25: 20, A25: 22
HTA0C05...	A25: 20, A25: 22
HTA0C07...	A25: 20, A25: 22
HTA0C10...	A25: 21, A25: 23
HTA0C12...	A25: 21, A25: 23
HTA0C15...	A25: 21, A25: 23
HTA0D01...	A25: 20, A25: 22
HTA0D03...	A25: 20, A25: 22
HTA0D05...	A25: 20, A25: 22
HTA0D07...	A25: 20, A25: 22
HTA0D10...	A25: 21, A25: 23
HTA0D12...	A25: 21, A25: 23
HTA0D15...	A25: 21, A25: 23
HTA1A01...	A25: 28, A25: 30
HTA1A03...	A25: 28, A25: 30, A25: 48
HTA1A05...	A25: 28, A25: 30, A25: 48
HTA1A07...	A25: 28, A25: 30
HTA1A10...	A25: 29, A25: 31
HTA1A12...	A25: 29, A25: 31
HTA1A15...	A25: 29, A25: 31
HTA1B01...	A25: 28, A25: 30
HTA1B03...	A25: 28, A25: 30
HTA1B05...	A25: 28, A25: 30
HTA1B07...	A25: 28, A25: 30
HTA1B10...	A25: 29, A25: 31
HTA1B12...	A25: 29, A25: 31
HTA1B15...	A25: 29, A25: 31
HTA1C01...	A25: 28, A25: 30
HTA1C03...	A25: 28, A25: 30
HTA1C05...	A25: 28, A25: 30
HTA1C07...	A25: 28, A25: 30
HTA1C10...	A25: 29, A25: 31
HTA1C12...	A25: 29, A25: 31
HTA1C15...	A25: 29, A25: 31
HTA1D01...	A25: 28, A25: 30
HTA1D03...	A25: 28, A25: 30
HTA1D05...	A25: 28, A25: 30
HTA1D07...	A25: 28, A25: 30
HTA1D10...	A25: 29, A25: 31
HTA1D12...	A25: 29, A25: 31
HTA1D15...	A25: 29, A25: 31
HTA2A01...	A25: 36, A25: 38
HTA2A03...	A25: 36, A25: 38, A25: 48
HTA2A05...	A25: 36, A25: 38, A25: 48
HTA2A07...	A25: 36, A25: 38
HTA2A10...	A25: 37, A25: 39
HTA2A12...	A25: 37, A25: 39
HTA2A15...	A25: 37, A25: 39
HTA2B01...	A25: 36, A25: 38
HTA2B03...	A25: 36, A25: 38
HTA2B05...	A25: 36, A25: 38
HTA2B07...	A25: 36, A25: 38
HTA2B10...	A25: 37, A25: 39
HTA2B12...	A25: 37, A25: 39

Part No.	Page
HTA2B15...	A25: 37, A25: 39
HTA2C01...	A25: 36, A25: 38
HTA2C03...	A25: 36, A25: 38
HTA2C05...	A25: 36, A25: 38
HTA2C07...	A25: 36, A25: 38
HTA2C10...	A25: 37, A25: 39
HTA2C12...	A25: 37, A25: 39
HTA2C15...	A25: 37, A25: 39
HTA2D01...	A25: 36, A25: 38
HTA2D03...	A25: 36, A25: 38
HTA2D05...	A25: 36, A25: 38
HTA2D07...	A25: 36, A25: 38
HTA2D10...	A25: 37, A25: 39
HTA2D12...	A25: 37, A25: 39
HTA2D15...	A25: 37, A25: 39
HTA3A01...	A25: 44, A25: 46
HTA3A03...	A25: 44, A25: 46
HTA3A05...	A25: 44, A25: 46
HTA3A07...	A25: 44, A25: 46
HTA3A10...	A25: 45, A25: 47
HTA3A12...	A25: 45, A25: 47
HTA3A15...	A25: 45, A25: 47
HTA3B01...	A25: 44, A25: 46
HTA3B03...	A25: 44, A25: 46
HTA3B05...	A25: 44, A25: 46
HTA3B07...	A25: 44, A25: 46
HTA3B10...	A25: 45, A25: 47
HTA3B12...	A25: 45, A25: 47
HTA3B15...	A25: 45, A25: 47
HTA3C01...	A25: 44, A25: 46
HTA3C03...	A25: 44, A25: 46
HTA3C05...	A25: 44, A25: 46
HTA3C07...	A25: 44, A25: 46
HTA3C10...	A25: 45, A25: 47
HTA3C12...	A25: 45, A25: 47
HTA3C15...	A25: 45, A25: 47
HTA03C-KIT...	A25: 48
HTA03CM-KIT...	A25: 48
HTA3D01...	A25: 44, A25: 46
HTA3D03...	A25: 44, A25: 46
HTA3D05...	A25: 44, A25: 46
HTA3D07...	A25: 44, A25: 46
HTA3D10...	A25: 45, A25: 47
HTA3D12...	A25: 45, A25: 47
HTA3D15...	A25: 45, A25: 47
HTA03F-KIT...	A25: 48
HTA03FM-KIT...	A25: 48
HTA05C-KIT...	A25: 48
HTA05CM-KIT...	A25: 48
HTA05F-KIT...	A25: 48
HTA05FM-KIT...	A25: 48
HTAYA01...	A25: 12, A25: 13
HTAYA03...	A25: 12, A25: 13
HTAYA05...	A25: 12, A25: 13
HTAYA07...	A25: 12, A25: 13
HTAYA10...	A25: 12, A25: 13
HTAYA12...	A25: 12, A25: 13
HTAYA15...	A25: 12, A25: 13
HTAYB01...	A25: 12, A25: 13

Part No.	Page
HTAYB03...	A25: 12, A25: 13
HTAYB05...	A25: 12, A25: 13
HTAYB07...	A25: 12, A25: 13
HTAYB10...	A25: 12, A25: 13
HTAYB12...	A25: 12, A25: 13
HTAYB15...	A25: 12, A25: 13
HTAZA01...	A25: 16, A25: 17
HTAZA03...	A25: 16, A25: 17
HTAZA05...	A25: 16, A25: 17
HTAZA07...	A25: 16, A25: 17
HTAZA10...	A25: 16, A25: 17
HTAZA12...	A25: 16, A25: 17
HTAZA15...	A25: 16, A25: 17
HTAZB01...	A25: 16, A25: 17
HTAZB03...	A25: 16, A25: 17
HTAZB05...	A25: 16, A25: 17
HTAZB07...	A25: 16, A25: 17
HTAZB10...	A25: 16, A25: 17
HTAZB12...	A25: 16, A25: 17
HTAZB15...	A25: 16, A25: 17
HXT0311S...	A20: 13
HXT0312S...	A20: 17
HXT0313S...	A20: 21
HXT0314S...	A20: 25
HXT0315S...	A20: 29
HXT0316S...	A20: 33
HXT0317S...	A20: 37
HXT0318S...	A20: 41
HXT0320S...	A20: 45
HXT0322S...	A20: 49
HXT0324S...	A20: 53
HXT0326S...	A20: 57
HXT0329S...	A20: 61
HXT0332S...	A20: 65
HXT0511S...	A20: 13
HXT0512S...	A20: 17
HXT0513S...	A20: 21
HXT0514S...	A20: 25
HXT0515S...	A20: 29
HXT0516S...	A20: 33
HXT0517S...	A20: 37
HXT0518S...	A20: 41
HXT0520S...	A20: 45
HXT0522S...	A20: 49
HXT0524S...	A20: 53
HXT0526S...	A20: 57
HXT0529S...	A20: 61
HXT0532S...	A20: 65
HXT0711S...	A20: 13
HXT0712S...	A20: 17
HXT0713S...	A20: 21
HXT0714S...	A20: 25
HXT0715S...	A20: 29
HXT0716S...	A20: 33
HXT0717S...	A20: 37
HXT0718S...	A20: 41
HXT0720S...	A20: 45
HXT0722S...	A20: 49
HXT0724S...	A20: 53
HXT0726S...	A20: 57
HXT0729S...	A20: 61
HXT0732S...	A20: 65
HXT1011S...	A20: 13

Part No.	Page
HXT1012S...	A20: 17
HXT1013S...	A20: 21
HXT1014S...	A20: 25
HXT1015S...	A20: 29
HXT1016S...	A20: 33
HXT1017S...	A20: 37
HXT1018S...	A20: 41
HXT1020S...	A20: 45
HXT1022S...	A20: 49
HXT1024S...	A20: 53
HXT1026S...	A20: 57
HXT1029S...	A20: 61
HXT1032S...	A20: 65
HXT1211S...	A20: 13
HXT1212S...	A20: 17
HXT1213S...	A20: 21
HXT1214S...	A20: 25
HXT1215S...	A20: 29
HXT1216S...	A20: 33
HXT1217S...	A20: 37
HXT1218S...	A20: 41
HXT1220S...	A20: 45
HXT1222S...	A20: 49
HXT1224S...	A20: 53
HXT1226S...	A20: 57
I	
I6149...	A92: 12, A92: 13, A92: 22, A92: 23, A92: 24, A92: 25
J	
J1926...	A92: 6, A92: 7, A92: 8, A92: 9, A92: 18, A92: 19, A92: 20, A92: 21
L	
LCB...	B20: 20, B20: 21, B20: 22
M	
MBS0500B...	B20: 3
MD...	B20: 13
MT2...	B20: 48
MT3...	B20: 48
MT4...	B20: 48
MT5...	B20: 48
N	
NMTB30...	B20: 49
NMTB40...	B20: 49
NMTB50...	B20: 49
O	
OP-05T308...	A50: 6, A60: 7, A60: 9, A60: 11, A60: 13, A60: 15, A60: 17, A60: 19, A60: 21, A60: 23, A60: 25, A60: 27, A70: 6, A70: 7, A70: 8, A70: 9, A70: 10, A70: 11, A70: 12, A70: 13, A70: 14, A70: 15
OP1...	A70: 6, A70: 8, A70: 9, A70: 10, A70: 11, A70: 12,

Part No.	Page
	A70: 13, A70: 14, A70: 15
OP2...	A70: 6, A70: 8, A70: 9, A70: 10, A70: 11, A70: 12, A70: 13, A70: 14, A70: 15
OP3...	A70: 6, A70: 8, A70: 9, A70: 10, A70: 11, A70: 12, A70: 13, A70: 14, A70: 15
OP4...	A70: 6, A70: 8, A70: 9, A70: 10, A70: 11, A70: 12, A70: 13, A70: 14, A70: 15
OP-060408...	A50: 8, A50: 10, A50: 18
OP-080508...	A50: 10, A50: 12, A50: 20, A50: 22
OP-090608...	A50: 12, A50: 14, A50: 16, A50: 24, A50: 26
R	
R8...	B20: 48
R34X22...	A60: 6, A60: 7
R34X35...	A60: 6, A60: 7
R34X45...	A60: 6, A60: 7
R36X22...	A60: 8, A60: 9
R36X35...	A60: 8, A60: 9
R36X45...	A60: 8, A60: 9
R38X22...	A60: 10, A60: 11
R38X35...	A60: 10, A60: 11
R38X45...	A60: 10, A60: 11
R42X22...	A60: 12, A60: 13
R42X35...	A60: 12, A60: 13
R42X45...	A60: 12, A60: 13
R44X22...	A60: 14
R44X35...	A60: 14
R46X22...	A60: 16
R46X35...	A60: 16
R48X10...	A60: 18
R48X25...	A60: 18
R52X10...	A60: 20
R52X25...	A60: 20
R54X10...	A60: 22
R54X25...	A60: 22
R56X10...	A60: 24
R56X25...	A60: 24
R58X10...	A60: 26
R58X25...	A60: 26
RDKF...	D: 18
RDKH...	D: 7, D: 8, D: 9
RDKI...	D: 12
RDKK...	D: 14
RDKL...	D: 16
RDKM...	D: 20
RDKN...	D: 22
RDKO...	D: 24
RDKP...	D: 26
RDKQ...	D: 28
RDKR...	D: 30

Part No.	Page
RDKS...	D: 32
RDKT...	D: 34
RDKU...	D: 36
RDRY...	D: 38
RSKF...	D: 19
RSKH...	D: 10, D: 11
RSKI...	D: 13
RSKK...	D: 15
RSKL...	D: 17
RSKM...	D: 21
RSKN...	D: 23
RSKO...	D: 25
RSKP...	D: 27
RSKQ...	D: 29
RSKR...	D: 31
RSKS...	D: 33
RSKT...	D: 35
RSKU...	D: 37
RSRY...	D: 39
S	
SCMT...	X: 23
SLEEVE...	A55: 30, A91: 58
SP34X22...	A60: 6, A60: 7
SP36X22...	A60: 8, A60: 9
SP38X22...	A60: 10, A60: 11
SP42X22...	A60: 12, A60: 13
SP44X22...	A60: 14
SP46X22...	A60: 16
SP48X10...	A60: 18
SP48X25...	A60: 18
SP52X10...	A60: 20
SP52X25...	A60: 20
SP54X10...	A60: 22
SP54X25...	A60: 22
SP56X10...	A60: 24
SP56X25...	A60: 24
SP58X10...	A60: 26
SP58X25...	A60: 26
SS0500...	B20: 47
SS0625...	B20: 47
SS0750...	B20: 47
SS1000...	B20: 47
SS1250...	B20: 47
SS1500...	B20: 47
SS2000...	B20: 47
ST03120...	A91: 24
ST03140...	A91: 25, A91: 26
ST03150...	A91: 27
ST03160...	A91: 28
ST03170...	A91: 29
ST03180...	A91: 30
ST03200...	A91: 31
ST03220...	A91: 32
ST03225...	A91: 32
ST03240...	A91: 33
ST03260...	A91: 34
ST03290...	A91: 35
ST03320...	A91: 36
ST05120...	A91: 24
ST05140...	A91: 25, A91: 26
ST05150...	A91: 27
ST05160...	A91: 28
ST05170...	A91: 29

Part No.	Page
ST05180...	A91: 30
ST05200...	A91: 31
ST05220...	A91: 32
ST05225...	A91: 32
ST05240...	A91: 33
ST05260...	A91: 34
ST05290...	A91: 35
ST05320...	A91: 36
ST07120...	A91: 24
ST07140...	A91: 25, A91: 26
ST07150...	A91: 27
ST07160...	A91: 28
ST07170...	A91: 29
ST07180...	A91: 30
ST07200...	A91: 31
ST07220...	A91: 32
ST07225...	A91: 32
ST07240...	A91: 33
ST07260...	A91: 34
ST07290...	A91: 35
ST07320...	A91: 36
T	
TAB39...	C: 66, C: 67
T-ACR-45...	A30: 43, A30: 57, A30: 73, A30: 111
TAK0-12...	A25: 18, A25: 49
TAK0-13...	A25: 18, A25: 49
TAK0-14...	A25: 18, A25: 49
TAK0-15...	A25: 18, A25: 19, A25: 49
TAK0-16...	A25: 19, A25: 49
TAK0-17...	A25: 19, A25: 49
TAK1-17...	A25: 24
TAK1-18...	A25: 24, A25: 49
TAK1-19...	A25: 24, A25: 25, A25: 49
TAK1-20...	A25: 25, A25: 26, A25: 49
TAK1-21...	A25: 26
TAK1-22...	A25: 26, A25: 27, A25: 49
TAK1-23...	A25: 27, A25: 49
TAK1-24...	A25: 27, A25: 49
TAK2-24...	A25: 32
TAK2-25...	A25: 32, A25: 33, A25: 49
TAK2-26...	A25: 33
TAK2-27...	A25: 33
TAK2-28...	A25: 33, A25: 34, A25: 49
TAK2-29...	A25: 34
TAK2-30...	A25: 34, A25: 49
TAK2-31...	A25: 34, A25: 35, A25: 49
TAK2-32...	A25: 35, A25: 49
TAK2-33...	A25: 35
TAK2-34...	A25: 35, A25: 49
TAK2-35...	A25: 35, A25: 49
TAK3-35...	A25: 40
TAK3-36...	A25: 40
TAK3-37...	A25: 40, A25: 41
TAK3-38...	A25: 41
TAK3-39...	A25: 41
TAK3-40...	A25: 41

Part No.	Page
TAK3-41...	A25: 42
TAK3-42...	A25: 42
TAK3-43...	A25: 42
TAK3-44...	A25: 42, A25: 43
TAK3-45...	A25: 43
TAK3-46...	A25: 43
TAK3-47...	A25: 43
TAK-IMP-KIT...	A25: 49
TAK-MET-KIT...	A25: 49
TAKY-9...	A25: 10
TAKY-10...	A25: 10, A25: 11
TAKY-11...	A25: 11
TAKZ-11...	A25: 14
TAKZ-12...	A25: 14
TAM0-12...	A25: 18, A25: 49
TAM0-13...	A25: 18, A25: 49
TAM0-14...	A25: 18, A25: 49
TAM0-15...	A25: 18, A25: 19, A25: 49
TAM0-16...	A25: 19, A25: 49
TAM0-17...	A25: 19, A25: 49
TAM1-17...	A25: 24
TAM1-18...	A25: 24, A25: 49
TAM1-19...	A25: 24, A25: 25, A25: 49
TAM1-20...	A25: 25, A25: 26, A25: 49
TAM1-21...	A25: 26
TAM1-22...	A25: 26, A25: 27, A25: 49
TAM1-23...	A25: 27, A25: 49
TAM1-24...	A25: 27, A25: 49
TAM2-24...	A25: 32
TAM2-25...	A25: 32, A25: 33, A25: 49
TAM2-26...	A25: 33
TAM2-27...	A25: 33
TAM2-28...	A25: 33, A25: 34, A25: 49
TAM2-29...	A25: 34
TAM2-30...	A25: 34, A25: 49
TAM2-31...	A25: 34, A25: 35, A25: 49
TAM2-32...	A25: 35, A25: 49
TAM2-33...	A25: 35
TAM2-34...	A25: 35, A25: 49
TAM2-35...	A25: 35, A25: 49
TAM3-35...	A25: 40
TAM3-36...	A25: 40
TAM3-37...	A25: 40, A25: 41
TAM3-38...	A25: 41
TAM3-39...	A25: 41
TAM3-40...	A25: 41
TAM3-41...	A25: 42
TAM3-42...	A25: 42
TAM3-43...	A25: 42
TAM3-44...	A25: 42, A25: 43
TAM3-45...	A25: 43
TAM3-46...	A25: 43
TAM3-47...	A25: 43
TAM-IMP-KIT...	A25: 49

Part No.	Page
TAM-MET-KIT...	A25: 49
TAMZ-11...	A25: 14
TAMZ-12...	A25: 14
TAN0-12...	A25: 18, A25: 49
TAN0-13...	A25: 18, A25: 49
TAN0-14...	A25: 18, A25: 49
TAN0-15...	A25: 18, A25: 19, A25: 49
TAN0-16...	A25: 19, A25: 49
TAN0-17...	A25: 19, A25: 49
TAN1-17...	A25: 24
TAN1-18...	A25: 24, A25: 49
TAN1-19...	A25: 24, A25: 25, A25: 49
TAN1-20...	A25: 25, A25: 26, A25: 49
TAN1-21...	A25: 26
TAN1-22...	A25: 26, A25: 27, A25: 49
TAN1-23...	A25: 27, A25: 49
TAN1-24...	A25: 27, A25: 49
TAN2-24...	A25: 32
TAN2-25...	A25: 32, A25: 33, A25: 49
TAN2-26...	A25: 33
TAN2-27...	A25: 33
TAN2-28...	A25: 33, A25: 34, A25: 49
TAN2-29...	A25: 34
TAN2-30...	A25: 34, A25: 49
TAN2-31...	A25: 34, A25: 35, A25: 49
TAN2-32...	A25: 35, A25: 49
TAN2-33...	A25: 35
TAN2-34...	A25: 35, A25: 49
TAN2-35...	A25: 35, A25: 49
TAN3-35...	A25: 40
TAN3-36...	A25: 40
TAN3-37...	A25: 40, A25: 41
TAN3-38...	A25: 41
TAN3-39...	A25: 41
TAN3-40...	A25: 41
TAN3-41...	A25: 42
TAN3-42...	A25: 42
TAN3-43...	A25: 42
TAN3-44...	A25: 42, A25: 43
TAN3-45...	A25: 43
TAN3-46...	A25: 43
TAN3-47...	A25: 43
TAN-IMP-KIT...	A25: 49
TAN-MET-KIT...	A25: 49
TANY-9...	A25: 10
TANY-10...	A25: 10, A25: 11
TANY-11...	A25: 11
TANZ-11...	A25: 14
TANZ-12...	A25: 14
TAP0-12...	A25: 18, A25: 49
TAP0-13...	A25: 18, A25: 49
TAP0-14...	A25: 18, A25: 49
TAP0-15...	A25: 18, A25: 19, A25: 49
TAP0-16...	A25: 19, A25: 49
TAP0-17...	A25: 19, A25: 49

Part No.	Page
TAP1-17...	A25: 24
TAP1-18...	A25: 24, A25: 49
TAP1-19...	A25: 24, A25: 25, A25: 49
TAP1-20...	A25: 25, A25: 26, A25: 49
TAP1-21...	A25: 26
TAP1-22...	A25: 26, A25: 27, A25: 49
TAP1-23...	A25: 27, A25: 49
TAP1-24...	A25: 27, A25: 49
TAP2-24...	A25: 32
TAP2-25...	A25: 32, A25: 33, A25: 49
TAP2-26...	A25: 33
TAP2-27...	A25: 33
TAP2-28...	A25: 33, A25: 34, A25: 49
TAP2-29...	A25: 34
TAP2-30...	A25: 34, A25: 49
TAP2-31...	A25: 34, A25: 35, A25: 49
TAP2-32...	A25: 35, A25: 49
TAP2-33...	A25: 35
TAP2-34...	A25: 35, A25: 49
TAP2-35...	A25: 35, A25: 49
TAP3-35...	A25: 40
TAP3-36...	A25: 40
TAP3-37...	A25: 40, A25: 41
TAP3-38...	A25: 41
TAP3-39...	A25: 41
TAP3-40...	A25: 41
TAP3-41...	A25: 42
TAP3-42...	A25: 42
TAP3-43...	A25: 42
TAP3-44...	A25: 42, A25: 43
TAP3-45...	A25: 43
TAP3-46...	A25: 43
TAP3-47...	A25: 43
TAP-IMP-KIT...	A25: 49
TAP-MET-KIT...	A25: 49
TAPY-9...	A25: 10
TAPY-10...	A25: 10, A25: 11
TAPY-11...	A25: 11
TAPZ-11...	A25: 14
TAPZ-12...	A25: 14
TAX0-12...	A25: 18, A25: 49
TAX0-13...	A25: 18, A25: 49
TAX0-14...	A25: 18, A25: 49
TAX0-15...	A25: 18, A25: 19, A25: 49
TAX0-16...	A25: 19, A25: 49
TAX0-17...	A25: 19, A25: 49
TAX1-17...	A25: 24
TAX1-18...	A25: 24, A25: 49
TAX1-19...	A25: 24, A25: 25, A25: 49
TAX1-20...	A25: 25, A25: 26, A25: 49
TAX1-21...	A25: 26
TAX1-22...	A25: 26, A25: 27, A25: 49
TAX1-23...	A25: 27, A25: 49
TAX1-24...	A25: 27, A25: 49

Part No.	Page
TAX2-24...	A25: 32
TAX2-25...	A25: 32, A25: 33, A25: 49
TAX2-26...	A25: 33
TAX2-27...	A25: 33
TAX2-28...	A25: 33, A25: 34, A25: 49
TAX2-29...	A25: 34
TAX2-30...	A25: 34, A25: 49
TAX2-31...	A25: 34, A25: 35, A25: 49
TAX2-32...	A25: 35, A25: 49
TAX2-33...	A25: 35
TAX2-34...	A25: 35, A25: 49
TAX2-35...	A25: 35, A25: 49
TAX3-35...	A25: 40
TAX3-36...	A25: 40
TAX3-37...	A25: 40, A25: 41
TAX3-38...	A25: 41
TAX3-39...	A25: 41
TAX3-40...	A25: 41
TAX3-41...	A25: 42
TAX3-42...	A25: 42
TAX3-43...	A25: 42
TAX3-44...	A25: 42, A25: 43
TAX3-45...	A25: 43
TAX3-46...	A25: 43
TAX3-47...	A25: 43
TAX-IMP-KIT...	A25: 49
TAX-MET-KIT...	A25: 49
TAXY-9...	A25: 10
TAXY-10...	A25: 10, A25: 11
TAXY-11...	A25: 11
TAXZ-11...	A25: 14
TAXZ-12...	A25: 14
TCGT...	B20: 16, B20: 23, X: 23
TCMT...	A20: 15, A20: 19, A20: 23, A20: 27, A20: 31, A20: 35, A20: 39, A20: 43, A20: 47, A20: 51, A20: 55, A20: 59, A20: 63, A20: 67, X: 23
THN...	E: 43
THP...	E: 50
THT...	E: 43
TM...	E: 18, E: 19, E: 20, E: 21, E: 22, E: 23, E: 24, E: 25, E: 26, E: 27, E: 28, E: 29
TMAU...	A92: 21
TMBK...	E: 8, E: 10, E: 11
TMMK...	E: 26, E: 28
TMNKxNPT...	E: 12
TMNKxNPTF...	E: 14
TMUK...	E: 18, E: 19, E: 20, E: 21
TMx3T2X...	E: 30, E: 31, E: 33
TMx3T3X...	E: 32, E: 34
TMxBSP...	E: 10
TMxBSPP...	E: 11
TMxBSW...	E: 8, E: 9

Part No.	Page
TMxNPS...	E: 16
TMxNPSF...	E: 17
TMxNPT...	E: 12, E: 13
TMxNPTF...	E: 14, E: 15
TN100K...	E: 46, E: 47, E: 48
TN150K...	E: 44, E: 45, E: 46, E: 48, E: 49
TNR...	E: 50
TP075K...	E: 38, E: 39, E: 40, E: 41, E: 42
TP100K...	E: 38, E: 39, E: 40, E: 41, E: 42
TSN...	E: 51
TSR...	E: 51
V	
V3300D...	A50: 6
V3301D...	A50: 6
V3800D...	A50: 8
V3801D...	A50: 8
V3815D...	A50: 8
V3817D...	A50: 8
V3818D...	A50: 8
V3820D...	A50: 8
V4401D...	A50: 10
V4417D...	A50: 10
V4418D...	A50: 10
V4422D...	A50: 10
V5101D...	A50: 12
V5118D...	A50: 12
V5120D...	A50: 12
V5122D...	A50: 12
V5701D...	A50: 14
V5702D...	A50: 14
V5722D...	A50: 14
V5724D...	A50: 14
V5726D...	A50: 14
V6302D...	A50: 16
V6326D...	A50: 16
V6329D...	A50: 16
V6332D...	A50: 16
V7002S...	A50: 18
V7029S...	A50: 18
V7602S...	A50: 20
V7629S...	A50: 20
V8302S...	A50: 22
V8332S...	A50: 22
V8902S...	A50: 24
V8929S...	A50: 24
V9502S...	A50: 26
V9532S...	A50: 26
W	
W3303H...	A50: 7
W3305H...	A50: 7
W3308H...	A50: 7
W3310H...	A50: 7
W3803H...	A50: 9
W3805H...	A50: 9
W3808H...	A50: 9
W3810H...	A50: 9
W4403H...	A50: 11
W4405H...	A50: 11
W4408H...	A50: 11
W4410H...	A50: 11

Part No.	Page
W5103H...	A50: 13
W5105H...	A50: 13
W5108H...	A50: 13
W5110H...	A50: 13
W5703H...	A50: 15
W5705H...	A50: 15
W5708H...	A50: 15
W5710H...	A50: 15
W6303H...	A50: 17
W6305H...	A50: 17
W6308H...	A50: 17
W6310H...	A50: 17
W7003H...	A50: 19
W7005H...	A50: 19
W7008H...	A50: 19
W7010H...	A50: 19
W7603H...	A50: 21
W7605H...	A50: 21
W7608H...	A50: 21
W7610H...	A50: 21
W8303H...	A50: 23
W8305H...	A50: 23
W8308H...	A50: 23
W8310H...	A50: 23
W8903H...	A50: 25
W8905H...	A50: 25
W8908H...	A50: 25
W8910H...	A50: 25
W9503H...	A50: 27
W9505H...	A50: 27
W9508H...	A50: 27
W9510H...	A50: 27
WBGX030101...	B20: 6, B20: 11, B20: 27, B20: 31, B20: 35
X	
X1926...	A92: 10, A92: 11
XTK11...	A20: 12
XTK12...	A20: 16
XTK13...	A20: 20
XTK14...	A20: 24
XTK15...	A20: 28
XTK16...	A20: 32
XTK17...	A20: 36
XTK18...	A20: 40
XTK20...	A20: 44
XTK22...	A20: 48
XTK24...	A20: 52
XTK26...	A20: 56
XTK29...	A20: 60
XTK32...	A20: 64
XTM12...	A20: 16
XTM13...	A20: 20
XTM14...	A20: 24
XTM15...	A20: 28
XTM17...	A20: 36
XTM18...	A20: 40
XTM20...	A20: 44
XTM22...	A20: 48
XTM24...	A20: 52
XTM26...	A20: 56
XTM29...	A20: 60

Part No.	Page
XTM32...	A20: 64
XTN11...	A20: 12
XTN12...	A20: 16
XTN13...	A20: 20
XTN14...	A20: 24
XTN15...	A20: 28
XTN16...	A20: 32
XTN17...	A20: 36
XTN18...	A20: 40
XTN20...	A20: 44
XTN22...	A20: 48
XTN24...	A20: 52
XTN26...	A20: 56
XTN29...	A20: 60
XTN32...	A20: 64
XTP11...	A20: 12
XTP12...	A20: 16
XTP13...	A20: 20
XTP14...	A20: 24
XTP15...	A20: 28
XTP16...	A20: 32
XTP17...	A20: 36
XTP18...	A20: 40
XTP20...	A20: 44
XTP22...	A20: 48
XTP24...	A20: 52
XTP26...	A20: 56
XTP29...	A20: 60
XTP32...	A20: 64
XTST12...	A91: 24
XTST13...	A91: 25
XTST14...	A91: 26
XTST15...	A91: 27
XTST16...	A91: 28
XTST17...	A91: 29
XTST18...	A91: 30
XTST20...	A91: 31
XTST22...	A91: 32
XTST24...	A91: 33
XTST26...	A91: 34
XTST29...	A91: 35
XTST32...	A91: 36

Guaranteed Test / Demo Application Form

Distributor PO #	

The following must be filled out completely before your test will be considered.

IMPORTANT: For processing, send purchase order to your Allied Field Sales Engineer (FSE). Please clearly mark the paperwork as "Test Order."

Distributor Information

Company Name: _____

Contact: _____

Account Number: _____

Phone: _____

Email: _____

End User Information

Company Name: _____

Contact: _____

Industry: _____

Phone: _____

Email: _____

Current Process

List all tooling, coatings, substrates, speeds and feeds, tool life, and any problems you are experiencing.

_____

_____

Test Objective

List what would make this a successful test (i.e. penetration rate, finish, tool life, hole size, etc.).

_____

_____

Application Information

Hole Diameter: _____ in/mm

Tolerance: _____

Material: _____ (4150, A36, cast iron, etc.)

Preexisting Diameter: _____ in/mm

Depth of Cut: _____ in/mm

Hardness: _____ (BHN, Rc)

Required Finish: _____ RMS

State: _____ (Casting, hot rolled, forging)

Machine Information

Machine Type: _____ (Lathe, screw machine, machine center, etc.)

Builder: _____ (Haas, Mori Seiki, etc.)

Model #: _____

Shank Required: _____ (CAT50, Morse taper, etc.)

Power: _____ HP/KW

Thrust: _____ lbs/N

Rigidity:
- ☐ Excellent
- ☐ Good
- ☐ Poor

Orientation:
- ☐ Vertical
- ☐ Horizontal

Tool Rotating:
- ☐ Yes
- ☐ No

Coolant Information

Coolant Delivery: _____ (Through tool, flood)

Coolant Pressure: _____ PSI / bar

Coolant Type: _____ (Air mist, oil, synthetic, water soluble, etc.)

Coolant Volume: _____ GPM / LPM

Requested Tooling

QTY	Item Number

QTY	Item Number

ALLIED MACHINE & ENGINEERING

Allied Machine & Engineering
120 Deeds Drive
Dover, OH 44622

Telephone: (330) 343-4283
Toll Free USA & Canada: (800) 321-5537
Email: info@alliedmachine.com

ALLIED MACHINE & ENGINEERING

Warranty Information

Allied Machine & Engineering ("Allied Machine") warrants to original equipment manufacturers, distributors, industrial and commercial users of its products for one year from the original date of sale that each new product manufactured or supplied by Allied Machine shall be free from defects in material and workmanship.

Allied Machine's sole and exclusive obligation under this warranty is limited to, at its option, without additional charge, replacing or repairing this product or issuing a credit. For this warranty to be applied, the product must be returned freight prepaid to the plant designated by an Allied Machine representative and which, upon inspection, is determined by Allied Machine to be defective in material and workmanship.

Complete information as to operating conditions, machine, setup, and the application of cutting fluid should accompany any product returned for inspection. This warranty shall not apply to any Allied Machine products which have been subjected to misuse, abuse, improper operating conditions, improper machine setup or improper application of cutting fluid or which have been repaired or altered if such repair or alteration, in the judgement of Allied Machine, would adversely affect the performance of the product.

THIS WARRANTY IS IN LIEU OF ALL OTHER WARRANTIES, EXPRESS OR IMPLIED, INCLUDING ANY IMPLIED WARRANTY OF MERCHANTABILITY OR FITNESS FOR A PARTICULAR PURPOSE. Allied Machine shall have no liability or responsibility for any claim, whether in contract, tort or otherwise, for any loss or damage arising out of, connected with, or resulting from the manufacture, sale, delivery or use of any product sold hereunder, in excess of the cost of replacement or repair as provided herein.

Allied Machine shall not be liable in contract or in tort (including, without limitation, negligence, strict liability or otherwise) for economic losses of any kind or for any special, incidental, indirect, consequential, punitive or exemplary damages arising in any way out of the performance of, or failure to perform this agreement.

ALL PRICES, DELIVERIES, DESIGNS, AND MATERIALS ARE SUBJECT TO CHANGE WITHOUT NOTICE.

Allied Machine & Engineering is registered to ISO 9001:2015 by DQS.

Wohlhaupter GmbH is registered to ISO 9001:2015 by QUACERT.

Allied Machine & Engineering Co. Europe Ltd. is registered to ISO 9001:2015 by bsi.

United States

Allied Machine & Engineering
120 Deeds Drive
Dover OH 44622
United States

Phone:
+1.330.343.4283

Toll Free USA and Canada:
800.321.5537

Toll Free USA and Canada:
800.223.5140

Allied Machine & Engineering
485 W Third Street
Dover OH 44622
United States

Phone:
+1.330.343.4283

Toll Free USA and Canada:
800.321.5537

Europe

Allied Machine & Engineering Co. (Europe) Ltd
93 Vantage Point
Pensnett Estate
Kingswinford
West Midlands
DY6 7FR England

Phone:
+44 (0) 1384 400 900

Wohlhaupter® GmbH
Maybachstrasse 4
Postfach 1264
72636 Frickenhausen
Germany

Phone:
+49 (0) 7022 408-0

Asia

Wohlhaupter® India Pvt. Ltd.
B-23, 3rd Floor
B Block Community Centre
Janakpuri, New Delhi - 110058
India

Phone:
+91 (0) 11.41827044

Your local Allied Machine representative:

www.alliedmachine.com

Allied Machine & Engineering is registered to **ISO 9001:2015** by DQS.
Wohlhaupter GmbH is registered to **ISO 9001:2015** by QUACERT.
Allied Machine & Engineering Co. (Europe) Ltd is registered to **ISO 9001:2015** by bsi.

ALLIED MACHINE & ENGINEERING

Copyright © 2025 Allied Machine and Engineering Corp. – All rights reserved.
All trademarks designated with the ® symbol are registered in the United States and other countries.
Literature Order Number: AMPC
Publish Date: May 2025