ALLIED MACHINE & ENGINEERING | WOHLHAUPTER®

Holemaking Solutions for Today's Manufacturing

Drilling

Reaming

Burnishing

Threading

Wohlhaupter®

▶ *BORING*

Modular Tool Holders

Specials

WOHLHAUPTER®

SECTION

B10-I

Modular Tool Holders

Wohlhaupter® Modular Tool Holders

Adapter Sleeves | Drill Chucks | Collet Chucks | Milling Arbors | Holding Arbors | Hydraulic Clamping Chucks
Tapping Chucks | Boring Bar Blanks

Clamping Tools with MVS Connection

Wohlhaupter offers a complete range of tool holders that incorporates the MVS connection. Our clamping tools allow for smaller MVS tools to connect and provide a quick and inexpensive alternative to special tooling. Many of the clamping tools also feature coolant-through capabilities.

Your safety and the safety of others is very important. This catalogue contains important safety messages. Always read and follow all safety precautions.

This triangle is a safety hazard symbol. It alerts you to potential safety hazards that can cause tool failure and serious injury.

When you see this symbol in the catalogue, look for a related safety message that may be near this triangle or referred to in the nearby text.

There are safety signal words also used in the catalogue. Safety messages follow these words.

WARNING

WARNING (shown above) means that failure to follow the precautions in this message could result in tool failure and serious injury.

NOTICE means that failure to follow the precautions in this message could result in damage to the tool or machine but not result in personal injury.

NOTE and **IMPORTANT** are also used. These are important that you read and follow but are not safety-related.

Visit www.alliedmachine.com for the most up-to-date information and procedures.

Applicable Industries

Aerospace | Agriculture | Automotive | Firearms | General Machining | Oil & Gas | Renewable Energy

Reference Icons
The following icons will appear throughout the catalogue to help you navigate between products.

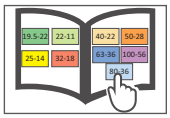

MVS Connection Colour Guide
Detailed instructions and information regarding the MVS connection(s)

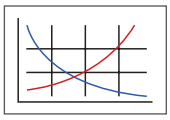

Recommended Cutting Data
Speed and feed recommendations for optimum and safe boring

Through Coolant Option
Indicates that the product is through coolant

Modular Tool Holders Table of Contents

Adapter Side Lock for Cylindrical Shanks 2

Drill Chucks 3

Collet Chucks 4

Milling Machine Arbors 5

Holding Arbors for Milling Cutters 6

Clamping and Tapping Chucks 7

Boring Bar Blanks 8

Accessories for Adapter Sleeves

Thread Pins and Ball Pressure Screws 9

Adapter Sleeves for Tap Shanks 10

Micro Clamping Chucks 11

Accessories for Drill Chucks 12

Collet Chucks for Erickson System 13

Accessories for Collet Chucks . . . . . 14 - 30

Sealing Disks for Collet Chucks . . . . . 31 - 32

Accessories for Milling Machine Arbors 33

Reducing Sleeves for Hydraulic Clamping Chucks 34

Quick Change Adapters . . . . . 35 - 38

Service Keys 39

Adapter Side Lock for Cylindrical Shanks DIN 1835B

Clamping Diameter Range: 6.00 mm - 40.00 mm

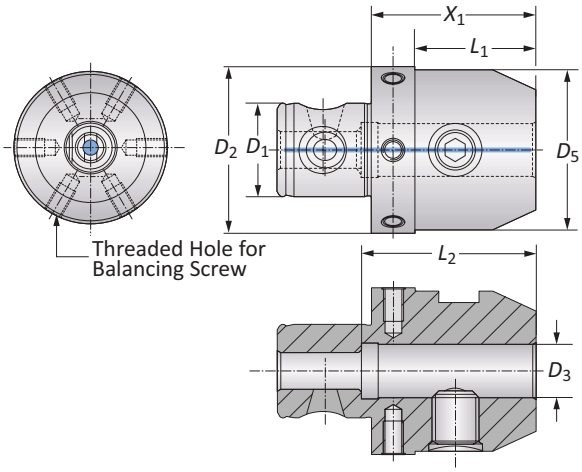

MVS Connection D_2 | D_1	Clamping Range D_3	Adapter Sleeve X_1	L_1	L_2	D_5	Weight	Balancing Screw	Part No.
32 - 18	6.00	36.00	23.00	40.00	25.00	0.20 (kg)	M5 x .8 x 6	**228022**
32 - 18	8.00	36.00	23.00	40.00	28.00	0.20 (kg)	M5 x .8 x 6	**228023**
32 - 18	10.00	48.00	–	44.00	35.00	0.30 (kg)	M5 x .8 x 6	**228024**
40 - 22	12.00	52.00	–	49.00	42.00	0.50 (kg)	M5 x .8 x 8	**228025**
40 - 22	14.00	54.00	–	49.00	44.00	0.60 (kg)	M5 x .8 x 8	**228026**
50 - 28	6.00	36.00	23.00	40.00	25.00	0.40 (kg)	M6 x 1 x 10	**162015**
50 - 28	8.00	36.00	23.00	40.00	28.00	0.40 (kg)	M6 x 1 x 10	**162016**
50 - 28	10.00	44.00	31.00	44.00	35.00	0.50 (kg)	M6 x 1 x 10	**162017**
50 - 28	12.00	44.00	31.00	49.00	42.00	0.50 (kg)	M6 x 1 x 10	**162018**
50 - 28	16.00	49.00	36.00	52.00	48.00	1.00 (kg)	M6 x 1 x 10	**162019**
50 - 28	18.00	49.00	36.00	52.00	48.00	1.00 (kg)	M6 x 1 x 10	**228014**
50 - 28	20.00	60.00	–	54.00	52.00	1.20 (kg)	M6 x 1 x 10	**162020**
63 - 36	20.00	49.00	36.00	54.00	52.00	1.10 (kg)	M6 x 1 x 10	**161024**
63 - 36	25.00	75.00	–	59.00	63.00	1.90 (kg)	M6 x 1 x 15	**161026**
63 - 36	32.00	75.00	–	63.00	72.00	2.20 (kg)	M6 x 1 x 15	**161027**
80 - 36	40.00	85.00	–	73.00	80.00	2.50 (kg)	M6 x 1 x 15	**161028**

NOTE: Balanced 10 gmm/kg.
NOTE: When using a ball pressure screw instead of a thread pin, it's similar to DIN 1835E, without axial adjustment.
See ball pressure screws on page B10-I: 9.

B10-M: 12-13
Key on B10-I: 1
B10: VI-VII

m = Metric (mm)

Drill Chucks for Clockwise & Counterclockwise Rotation

Clamping Diameter Range: 0.50 mm - 16.00 mm

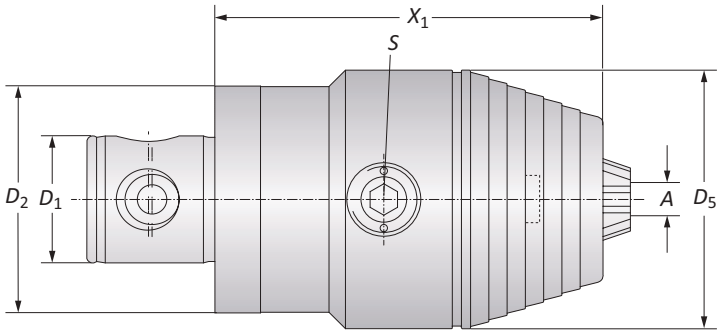

	MVS Connection	Clamping Range	Drill Chuck				
	D_2 | D_1	A	X_1	D_5	S	Weight	Part No.
m	50 - 28	0.50 - 13.00	80.00	50.00	s6 / B	1.10 (kg)	**209088**
m	50 - 28	2.50 - 16.00	85.00	57.00	s6 / B	1.30 (kg)	**209089**
m	63 - 36	0.50 - 13.00	80.00	50.00	s6 / B	1.30 (kg)	**209090**
m	63 - 36	2.50 - 16.00	85.00	57.00	s6 / B	1.50 (kg)	**209091**

B10-M: 12-13

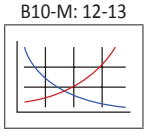

B10: VI-VII

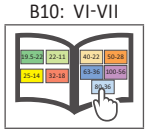

Key on B10-I: 1

m = Metric (mm)

Collet Chucks ISO 10897 (DIN 6388) | ISO 15488 (DIN 6499)

Clamping Diameter Range: 2.00 mm - 32.00 mm

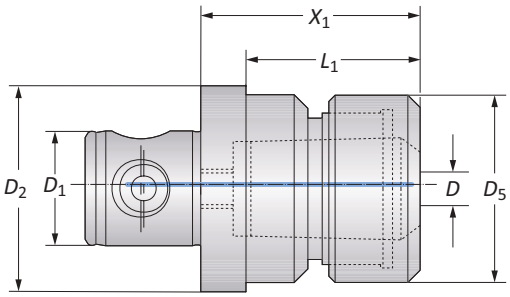

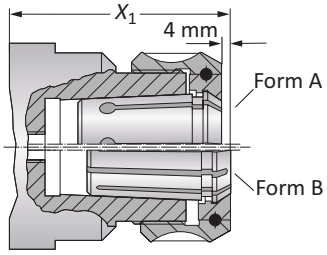

Collet Chucks ISO 10897 (DIN 6388) | Diameter Range: 2.00 mm - 32.00 mm

	MVS Connection	Clamping Range		Collet Chuck				
	D_2 | D_1	D	Nominal Size	X_1*	L_1	D_5	Weight	Part No.
	40 - 22	2.00 - 16.00	16	64.00	–	43.00	0.50 (kg)	**209082**
	50 - 28	2.00 - 16.00	16	63.00	50.00	43.00	0.90 (kg)	**162011**
m	50 - 28	2.00 - 25.00	25	74.00	–	60.00	1.00 (kg)	**209083**
	63 - 36	2.00 - 25.00	25	74.00	–	60.00	1.40 (kg)	**161016**
	63 - 36	4.00 - 32.00	32	89.00	–	72.00	1.80 (kg)	**161098**

***X_1** Clamping nut with ball-bearing.

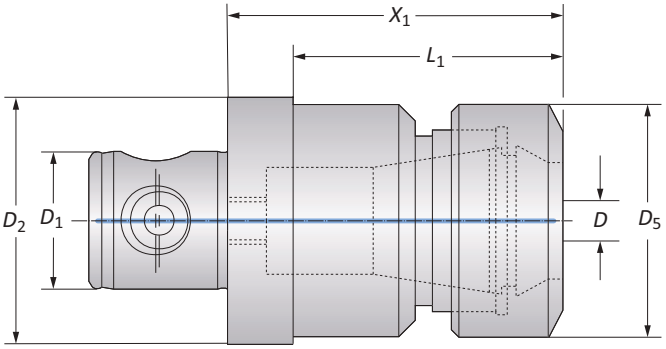

Collet Chucks ISO 15488 (DIN 6499) | Diameter Range: 1.00 mm - 26.00 mm

	MVS Connection	Clamping Range		Collet Chuck				
	D_2 | D_1	D	Nominal Size	X_1*	L_1	D_5	Weight	Part No.
	32 - 18	1.00 - 10.00	ER 16	54.00	4100	28.00	0.20 (kg)	**228020**
	40 - 22	2.00 - 16.00	ER 25	75.00	–	42.00	0.60 (kg)	**228021**
	50 - 28	2.00 - 16.00	ER 25	75.00	62.00	42.00	0.80 (kg)	**228003**
m	50 - 28	2.00 - 20.00	ER 32	76.00	–	50.00	0.80 (kg)	**228004**
	63 - 36	2.00 - 20.00	ER 32	76.00	63.00	50.00	1.20 (kg)	**228007**
	63 - 36	4.00 - 26.00	ER 40	88.00	–	63.00	1.20 (kg)	**228006**

***X_1** Clamping nut with sliding ring.

B10-M: 12-13
Key on B10-I: 1
B10: VI-VII

m = Metric (mm)

Milling Machine Arbors

For Milling Cutters with Longitudinal or Transverse Drive | Shell Mill Adapter Range: 13.00 mm - 40.00 mm

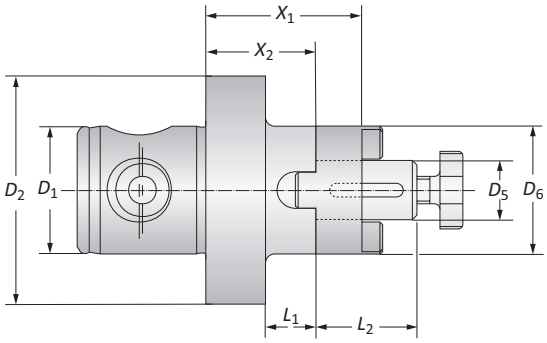

	MVS Connection	Adapter Range	Milling Arbor						
	D_2 | D_1	D_5	X_1	X_2	L_1	L_2	D_6	Weight	Part No.
m	50 - 28	13.00	34.00	24.00	11.00	22.00	28.00	0.40 (kg)	**162002**
	50 - 28	16.00	40.00	30.00	17.00	27.00	32.00	0.50 (kg)	**162003**
	50 - 28	22.00	40.00	28.00	15.00	31.00	40.00	0.60 (kg)	**162004**
	63 - 36	16.00	40.00	30.00	17.00	27.00	32.00	0.80 (kg)	**161002**
	63 - 36	22.00	40.00	28.00	15.00	31.00	40.00	0.90 (kg)	**161003**
	63 - 36	27.00	40.00	28.00	15.00	33.00	48.00	1.10 (kg)	**161004**
	63 - 36	32.00	40.00	26.00	13.00	38.00	58.00	1.30 (kg)	**161005**
	80 - 36	40.00	53.00	39.00	–	41.00	70.00*	2.60 (kg)	**161006**

*Ø 70.00 mm with clutch drive ring.

B10-M: 12-13
Key on B10-I: 1
B10: VI-VII

m = Metric (mm)

Holding Arbors for Milling Cutters

Central Coolant Feed | Shell Mill Adapter Range: 16.00 mm - 40.00 mm

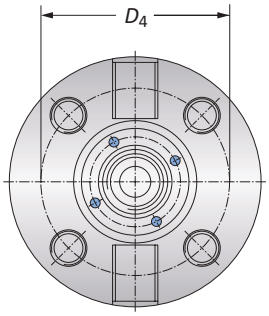

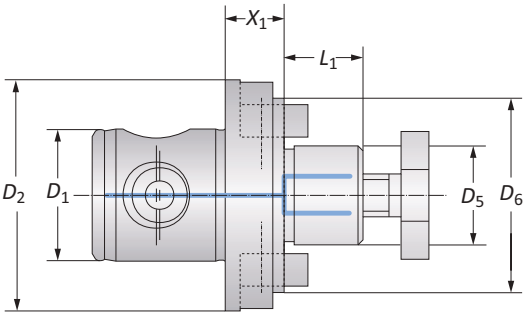

	MVS Connection	Adapter Range	Holding Arbor					
	D_2 | D_1	D_5	X_1	L_1	D_4	D_6	Weight	Part No.
	50 - 28	16.00	16.00	17.00	–	40.00	0.40 (kg)	**162032**
	50 - 28	22.00	16.00	19.00	–	50.00	0.50 (kg)	**162033**
m	63 - 36	27.00	16.00	21.00	–	60.00	0.80 (kg)	**161082**
	80 - 36	32.00	16.00	24.00	–	78.00	1.10 (kg)	**209080**
	80 - 36	40.00	19.00	27.00	66.70	89.00	1.50 (kg)	**209081**

NOTE: See page B10-G: 15 for holding arbor with MVS 100 - 56 connection.

B10-M: 12-13
Key on B10-I: 1
B10: VI-VII

m = Metric (mm)

Clamping Chucks | Tapping Chucks

Clamping Range: 20.00 mm

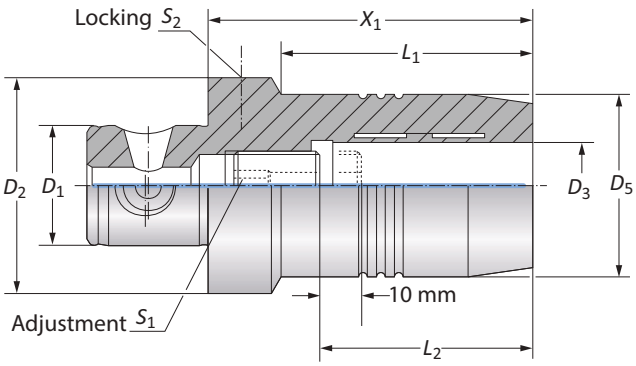

Though Coolant Hydraulic Clamping Chucks

	MVS Connection	Clamping Range	Clamping Chucks							
	D_2 | D_1	D_3	X_1	D_5	L_1	L_2	S_1	S_2	Weight	Part No.
m	50 - 28	20.00	75.00	42.00	58.00	51.00	s6	s5	0.80 (kg)	**209044**
	63 - 36	20.00	75.00	42.00	53.00	51.00	s5	s5	1.10 (kg)	**209045**

Note: Balanced corresponds to a specific residual imbalance of ≤ 10 gmm/kg.

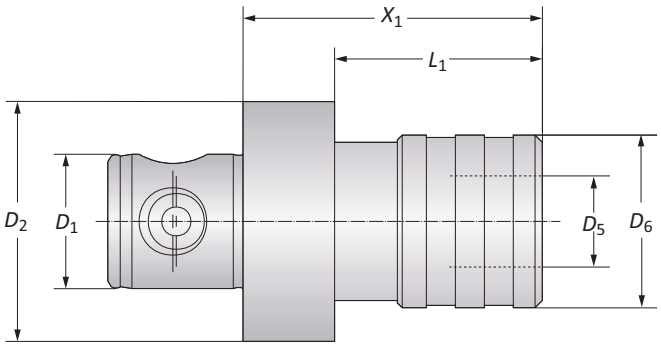

Tapping Chucks (Non-Coolant)

	MVS Connection	Quick Change Adapters		Tapping Chucks				Length Compensation			
	D_2 | D_1	For Taps	Nominal Size	X_1	L_1	D_5	D_6	Pressure	Tension	Weight	Part No.
	50 - 28	M 3 - M 12	1	62.00	49.00	19.00	41.50	7.50	7.50	0.70 (kg)	**209098**
	50 - 28	M 6 - M 20	2	94.00	–	31.00	60.30	10.00	10.00	1.10 (kg)	**209099**
m	63 - 36	M 3 - M 12	1	56.00	43.00	19.00	41.50	7.50	7.50	0.80 (kg)	**231005**
	63 - 36	M 6 - M 20	2	80.00	67.00	31.00	60.30	10.00	10.00	1.30 (kg)	**231006**
	63 - 36	M 14 - M 33	3	152.00	–	48.00	86.00	17.50	17.50	4.10 (kg)	**231007**

B10-M: 12-13
B10: VI-VII
Key on B10-I: 1

m = Metric (mm)

Boring Bar Blanks

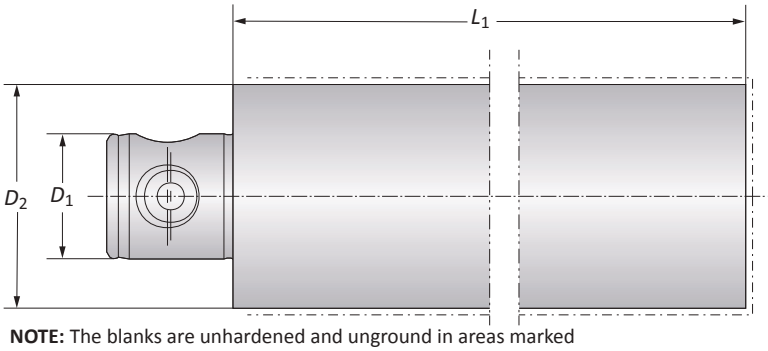

NOTE: The blanks are unhardened and unground in areas marked

	MVS Connection D_2 | D_1	Boring Bar Blanks L_1	Weight	Part No.
	50 - 28	160.00	2.60 (kg)	**166103**
m	63 - 36	160.00	4.20 (kg)	**166104**
	80 - 36	160.00	6.60 (kg)	**166105**

B10-M: 12-13
Key on B10-I: 1
B10: VI-VII

m = Metric (mm)

Accessories for Adapter Sleeves

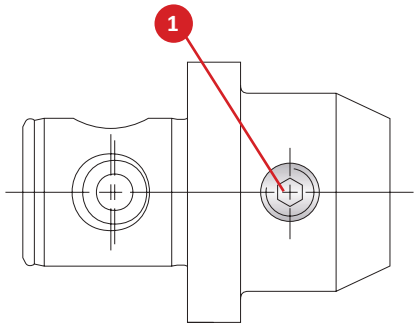

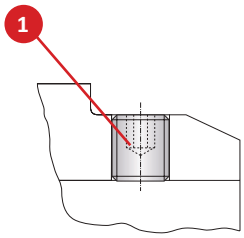

DIN 1835B

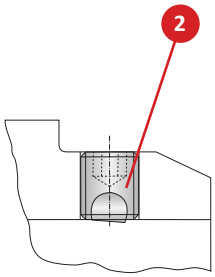

Similar to DIN 1835E*

	Clamping Diameter	1 Thread Pin		2 Ball Pressure Screw		
		Part No.	Service Key	Part No.	Service Key	Thread
ⓜ	6.00	**115680**	s3 / B	**315788**	s3 / B	M6 x 1
	8.00	**115681**	s4 / B	**315789**	s4 / B	M8 x 1.25
	10.00	**115682**	s5 / B	**515535**	s5 / B	M10 x 1.5
	12.00	**115683**	s6 / B	**315790**	s6 / B	M12 x 1.75
	14.00	**115683**	s6 / B	**315790**	s6 / B	M12 x 1.75
	16.00	**115684**	s6 / B	**515675**	s6 / B	M14 x 2
	18.00	**115684**	s6 / B	**515675**	s6 / B	M14 x 2
	20.00	**115685**	s8 / B	**515676**	s8 / B	M16 x 2
	25.00	**115686**	s10 / B	**515677**	s10 / B	M18 x 2 (2x)
	32.00	**115687**	s10 / B	**515678**	s10 / B	M20 x 2 (2x)
	40.00	**115687**	s10 / B	**515678**	s10 / B	M20 x 2 (2x)

*Without axial adjustment.

B10-M: 12-13
Key on B10-I: 1
B10: VI-VII

ⓜ = Metric (mm)

Accessories for Adapter Sleeves

Adapter Sleeve for Tap Shanks Suitable for Reduction Sleeves with Shanks to DIN 1835-B

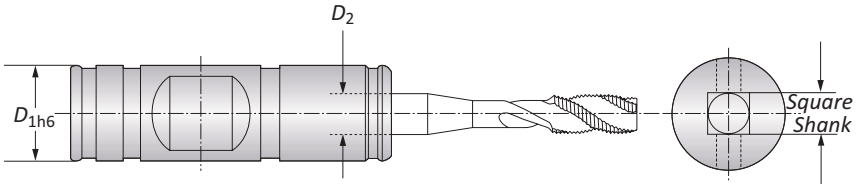

	Adapter Sleeves		
	D_{1h6}	D_2 x Square Shank	Part No.
m	8.00	2.10 x 2.50	**271190**
	8.00	2.10 x 2.80	**271191**
	10.00	2.70 x 3.50	**271192**
	10.00	3.00 x 4.00	**271193**
	10.00	3.40 x 4.50	**271194**
	12.00	4.90 x 6.00	**271195**
	14.00	5.50 x 7.00	**271196**
	14.00	6.20 x 8.00	**271197**
	16.00	7.00 x 9.00	**271198**
	16.00	8.00 x 10.00	**271199**
	18.00	9.00 x 11.00	**271200**
	20.00	9.00 x 12.00	**271201**
	25.00	11.00 x 14.00	**271202**
	25.00	12.00 x 16.00	**271203**
	32.00	14.50 x 18.00	**271204**
	32.00	16.00 x 20.00	**271205**
	32.00	18.00 x 22.00	**271206**
	40.00	20.00 x 25.00	**271207**
	40.00	22.00 x 28.00	**271208**
	50.00	24.00 x 32.00	**271209**
	50.00	29.00 x 36.00	**271210**
	50.00	32.00 x 40.00	**271211**

B10-M: 12-13
Key on B10-I: 1
B10: VI-VII

m = Metric (mm)

Accessories for Adapter Sleeves

Adapter Sleeve for Tap Shanks Suitable for Reduction Sleeves with Shanks to DIN 1835-B

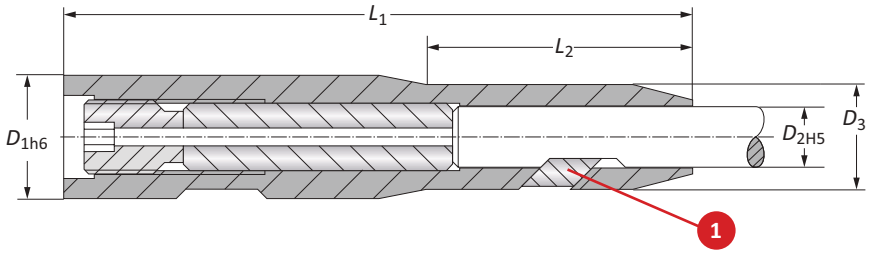

	Micro Clamping Chucks					1 Clamping Wedge	
	D_{1h6}	D_{2H5}	D_3	L_1	L_2	Part No.	Part No.
m	16.00	6.00	12.00	100.00	40.00	**219170**	**219070**
	16.00	8.00	14.00	100.00	45.00	**219171**	**219071**
	20.00	10.00	17.00	100.00	43.00	**219172**	**219072**
	25.00	12.00	20.00	110.00	39.00	**219173**	**219073**
	25.00	14.00	22.00	110.00	46.00	**219174**	**219074**
	32.00	16.00	25.00	125.00	45.00	**219174**	**219075**
	32.00	18.00	27.00	130.00	54.00	**219174**	**219076**
	32.00	20.00	30.00	130.00	62.00	**219175**	**219077**

NOTE: Clamping chucks are used in reduction sleeves for clamping tools with cylindrical shanks to DIN 1835-B (Fig. 1). The chucks' design allows the use of standard tools versus ordering special tools (Fig. 2).

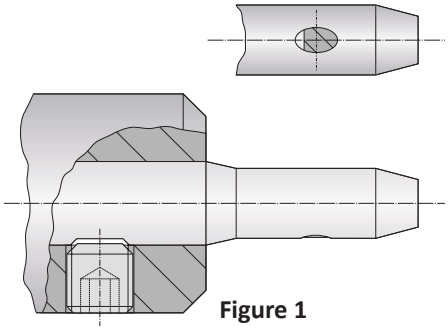

Figure 1

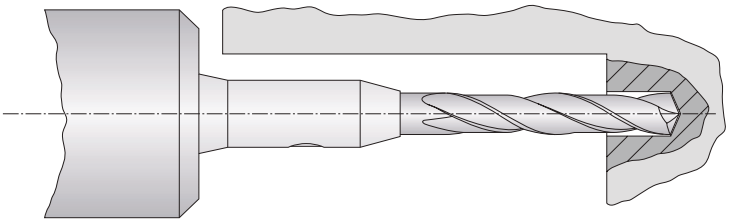

Figure 2

B10-M: 12-13
B10: VI-VII
Key on B10-I: 1

m = Metric (mm)

Accessories for Drill Chucks

Service Keys | Gaskets | Assembly Tool

Service Keys for Drill Chucks

Service Key		Tightening Torque Nm	Part No.
Service Key	Type		
2.50	B	15	**415577**
6.00	B	15	**115578**

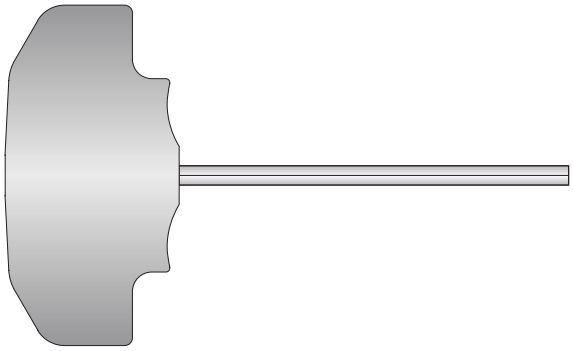

Gaskets for Drill Chucks

	Gasket		
	Gasket Diameter	Clamping Diameter	Part No.
m	3.00 - 6.00	0.50 - 13.00	**387113**
	6.00 - 13.00	0.50 - 13.00	**387114**
	3.00 - 6.00	2.50 - 16.00	**387115**
	6.00 - 16.00	2.50 - 16.00	**387116**

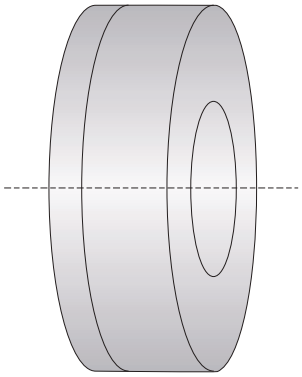

Assembly Tool for Gasket

Part No.
387112

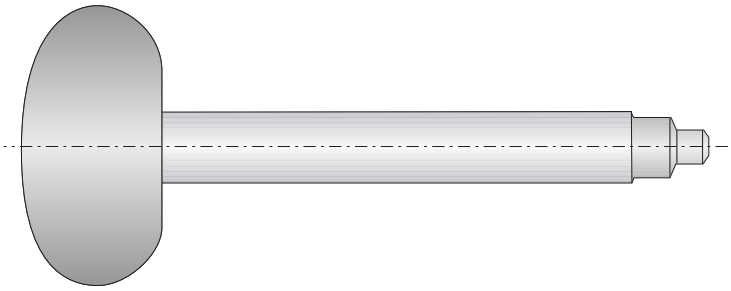

B10-M: 12-13

Key on B10-I: 1

B10: VI-VII

m = Metric (mm)

Collet Chucks for Erickson System | Cylindrical Collet Chucks for ISO 15488 (DIN 6499) Collets

Diameter Range: 1.00 mm - 10.00 mm

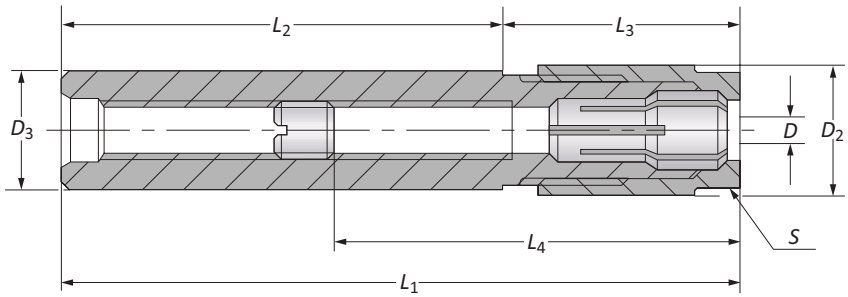

Collet Chucks for Erickson System

	Nominal Size	Clamping Range D	Collet Chuck D_2	D_3	L_1	L_2	L_3	$L_{4\,Min}$	$L_{4\,Max}$	Service Key S	Weight	Part No.
m	6	0.50 - 6.00	14.00	12.50	109.00	76.00	33.00	38.00	100.00	13	0.20 (kg)	**162080**
	6	0.50 - 6.00	14.00	12.50	173.00	140.00	33.00	38.00	162.00	13	0.20 (kg)	**162081**
	10	0.50 - 10.00	21.00	20.00	117.00	76.00	41.00	40.00	103.00	19	0.30 (kg)	**162082**
	10	0.50 - 10.00	21.00	20.00	181.00	140.00	41.00	40.00	167.00	19	0.30 (kg)	**162083**

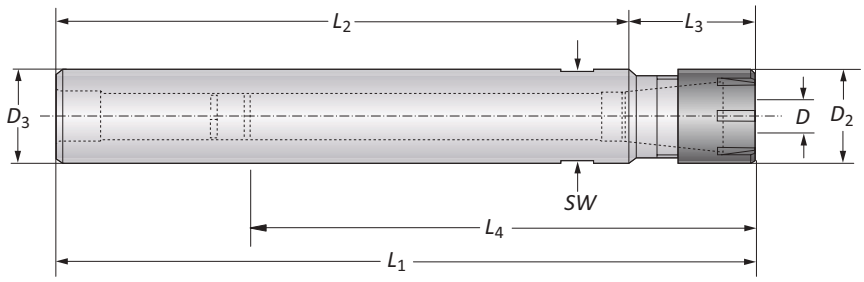

Cylindrical Collet Chucks for ISO 15488 (DIN 6499) Collets

	Nominal Size	Collet Chuck D	D_2	D_3	L_1	L_2	L_3	$L_{4\,Min}$	$L_{4\,Max}$	Hex Size SW	Part No.
m	ER 8	1.00 - 5.00	12.00	8.00	126.00	100.00	26.00	36.50	36.50	09	**209054**
	ER 8	1.00 - 5.00	12.00	12.00	166.00	140.00	26.00	36.50	36.50	09	**209055**
	ER 11	1.00 - 7.00	16.00	16.00	106.50	80.00	26.50	23.00	65.00	11	**209056**
	ER 11	1.00 - 7.00	16.00	16.00	166.50	140.00	26.50	23.00	65.00	11	**209057**
	ER 16	1.00 - 10.00	22.00	20.00	118.50	80.00	38.50	33.00	102.00	17	**209058**
	ER 16	1.00 - 10.00	22.00	20.00	178.50	140.00	38.50	33.00	123.00	17	**209059**

B10-M: 12-13
Key on B10-I: 1
B10: VI-VII

m = Metric (mm)

Accessories for Collet Chucks

Diameter Range: 0.50 mm - 10.00 mm

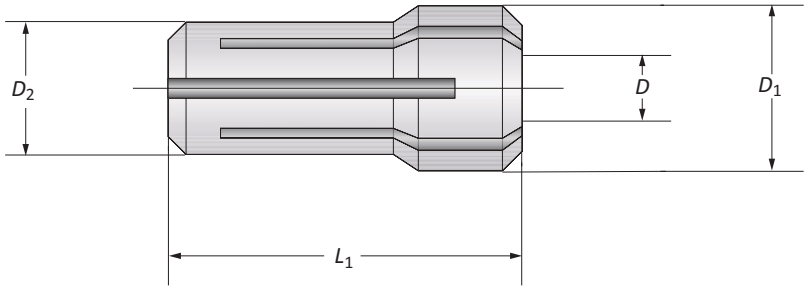

Collet Sets for Erickson System

	Nominal Size	Standard-No.	Set D_1	Set D_2	Set L_1	Set D	Part No.
m	6	416 E	9.50	7.62	25.50	0.50 - 6.00	**071016**
	10	417 E	13.50	11.43	30.40	0.50 - 10.00	**071017**

Collets for Erickson System

	Collet Nominal Size	Diameter Range D	Part No.
m	6	0.50 - 1.00	**071355**
	6	1.00 - 1.50	**071356**
	6	1.50 - 2.00	**071357**
	6	2.00 - 2.50	**071358**
	6	2.50 - 3.00	**071359**
	6	3.00 - 3.50	**071360**
	6	3.50 - 4.00	**071361**
	6	4.00 - 4.50	**071362**
	6	4.50 - 5.00	**071363**
	6	5.00 - 5.50	**071364**
	6	5.50 - 6.00	**071365**
	10	0.50 - 1.00	**071368**
	10	1.00 - 1.50	**071369**
	10	1.50 - 2.00	**071370**
	10	2.00 - 2.50	**071371**
	10	2.50 - 3.00	**071372**
	10	3.00 - 3.50	**071373**
	10	3.50 - 4.00	**071374**
	10	4.00 - 4.50	**071375**
	10	4.50 - 5.00	**071376**
	10	5.00 - 5.50	**071377**
	10	5.50 - 6.00	**071378**
	10	6.00 - 6.50	**071379**
	10	6.50 - 7.00	**071380**
	10	7.00 - 7.50	**071381**
	10	7.50 - 8.00	**071382**
	10	8.00 - 8.50	**071383**
	10	8.50 - 9.00	**071384**
	10	9.00 - 9.50	**071385**
	10	9.50 - 10.00	**071681**

B10-M: 12-13
Key on B10-I: 1
B10: VI-VII

m = Metric (mm)

Accessories for Collet Chucks

ISO 10897-A (DIN 6388-A)

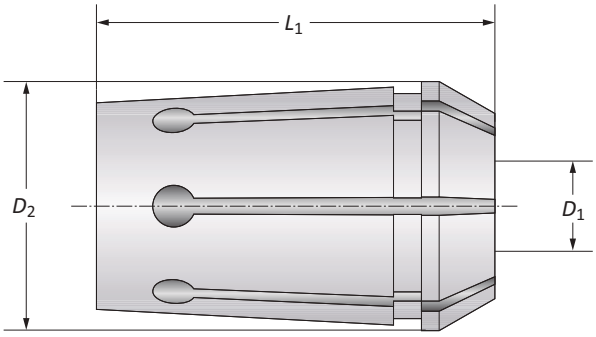

Collet Sets

	Nominal Size	Standard-No.	Set D_2	Set L_1	Set D_1	Part No.
m	A 16	410 E	22.65	40.00	2.00 - 16.00	**071003**
	A 25	444 E	32.90	52.00	2.00 - 25.00	**071004**
	A 32	450 E	41.30	60.00	4.00 - 32.00	**071019**

Collets

	Nominal Size	Diameter D_1	Part No.
	A 16	2.00	**071140**
	A 16	2.50	**071141**
	A 16	3.00	**071142**
	A 16	3.50	**071143**
	A 16	4.00	**071144**
	A 16	4.50	**071145**
	A 16	5.00	**071146**
	A 16	5.50	**071147**
	A 16	6.00	**071148**
	A 16	6.50	**071149**
	A 16	7.00	**071150**
	A 16	7.50	**071151**
	A 16	8.00	**071152**
	A 16	8.50	**071153**
m	A 16	9.00	**071154**
	A 16	9.50	**071155**
	A 16	10.00	**071156**
	A 16	10.50	**071157**
	A 16	11.00	**071158**
	A 16	11.50	**071159**
	A 16	12.00	**071160**
	A 16	12.50	**071161**
	A 16	13.00	**071162**
	A 16	13.50	**071163**
	A 16	14.00	**071164**
	A 16	14.50	**071165**
	A 16	15.00	**071166**
	A 16	15.50	**071167**
	A 16	16.00	**071168**

B10-M: 12-13
Key on B10-I: 1
B10: VI-VII

m = Metric (mm)

Accessories for Collet Chucks

ISO 10897-A (DIN 6388-A)

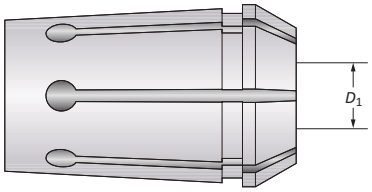

Collets

	Nominal Size	Diameter D_1	Part No.
	A 25	2.00	**071169**
	A 25	3.00	**071170**
	A 25	4.00	**071171**
	A 25	5.00	**071172**
	A 25	6.00	**071173**
	A 25	7.00	**071174**
	A 25	8.00	**071175**
	A 25	9.00	**071176**
	A 25	10.00	**071177**
	A 25	11.00	**071178**
	A 25	12.00	**071179**
	A 25	13.00	**071180**
	A 25	14.00	**071181**
	A 25	15.00	**071182**
	A 25	16.00	**071183**
	A 25	17.00	**071184**
	A 25	18.00	**071185**
	A 25	19.00	**071186**
	A 25	20.00	**071187**
	A 25	21.00	**071188**
	A 25	22.00	**071189**
	A 25	23.00	**071190**
	A 25	24.00	**071191**
	A 25	25.00	**071192**
	A 32	4.00	**071612**
	A 32	5.00	**071419**
m	A 32	6.00	**071420**
	A 32	7.00	**071613**
	A 32	8.00	**071421**
	A 32	9.00	**071614**
	A 32	10.00	**071422**
	A 32	11.00	**071666**
	A 32	12.00	**071423**
	A 32	13.00	**071667**
	A 32	14.00	**071668**
	A 32	15.00	**071669**
	A 32	16.00	**071424**
	A 32	17.00	**071670**
	A 32	18.00	**071665**
	A 32	19.00	**071671**
	A 32	20.00	**071416**
	A 32	21.00	**071672**
	A 32	22.00	**071673**
	A 32	23.00	**071674**
	A 32	24.00	**071675**
	A 32	25.00	**071417**
	A 32	26.00	**071676**
	A 32	27.00	**071677**
	A 32	28.00	**071678**
	A 32	29.00	**071679**
	A 32	30.00	**071633**
	A 32	31.00	**071680**
	A 32	32.00	**071418**

Accessories for Collet Chucks

ISO 10897-B (DIN 6388-B)

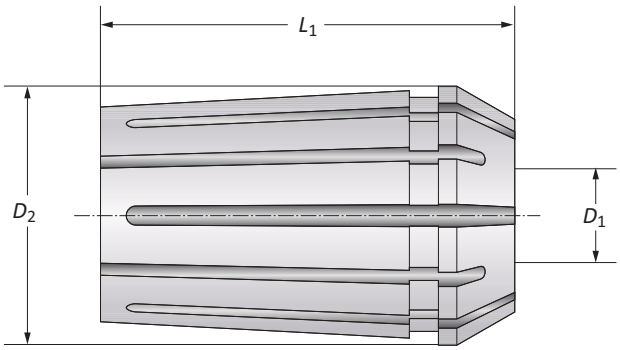

Collet Sets

	Nominal Size	Standard-No.	Set D_2	Set L_1	Set D_1	Part No.
ⓜ	B 16	415 E	22.65	40.00	1.50 - 16.00	**071005**
	B 25	462 E	32.90	52.00	3.50 - 25.00	**071006**
	B 32	467 E	41.30	60.00	5.50 - 32.00	**071022**

B10-M: 12-13
Key on B10-I: 1
B10: VI-VII

ⓜ = Metric (mm)

Accessories for Collet Chucks

ISO 10897-B (DIN 6388-B)

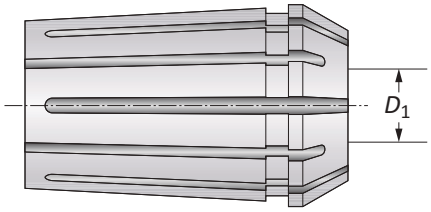

Collets

	Nominal Size	Diameter D_1	Part No.
	B 25	3.50 - 4.00	**071627**
	B 25	4.00 - 4.50	**071628**
	B 25	4.50 - 5.00	**071218**
	B 25	5.00 - 5.50	**071219**
	B 25	5.50 - 6.00	**071220**
	B 25	6.00 - 6.50	**071221**
	B 25	6.50 - 7.00	**071222**
	B 25	7.00 - 7.50	**071223**
	B 25	7.50 - 8.00	**071224**
	B 25	8.00 - 8.50	**071225**
	B 25	8.50 - 9.00	**071226**
	B 25	9.00 - 9.50	**071227**
	B 25	9.50 - 10.00	**071228**
	B 25	10.00 - 10.50	**071229**
	B 25	10.50 - 11.00	**071230**
	B 25	11.00 - 11.50	**071231**
	B 25	11.50 - 12.00	**071232**
	B 25	12.00 - 12.50	**071233**
	B 25	12.50 - 13.00	**071234**
	B 25	13.00 - 13.50	**071235**
	B 25	13.50 - 14.00	**071236**
m	B 25	14.00 - 14.50	**071237**
	B 25	14.50 - 15.00	**071238**
	B 25	15.00 - 15.50	**071239**
	B 25	15.50 - 16.00	**071240**
	B 25	16.00 - 16.50	**071241**
	B 25	16.50 - 17.00	**071242**
	B 25	17.00 - 17.50	**071243**
	B 25	17.50 - 18.00	**071244**
	B 25	18.00 - 18.50	**071245**
	B 25	18.50 - 19.00	**071246**
	B 25	19.00 - 19.50	**071247**
	B 25	19.50 - 20.00	**071248**
	B 25	20.00 - 20.50	**071249**
	B 25	20.50 - 21.00	**071250**
	B 25	21.00 - 21.50	**071251**
	B 25	21.50 - 22.00	**071252**
	B 25	22.00 - 22.50	**071253**
	B 25	22.50 - 23.00	**071254**
	B 25	23.00 - 23.50	**071255**
	B 25	23.50 - 24.00	**071256**
	B 25	24.00 - 24.50	**071257**
	B 25	24.50 - 25.00	**071258**

B10-M: 12-13

Key on B10-I: 1

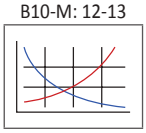

B10: VI-VII

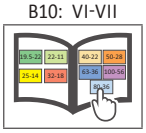

m = Metric (mm)

Accessories for Collet Chucks

ISO 10897-B (DIN 6388-B)

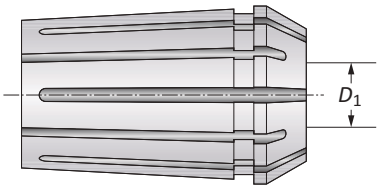

Collets

	Nominal Size	Diameter D_1	Part No.
	B 32	5.50 - 6.00	**071686**
	B 32	6.00 - 6.50	**071687**
	B 32	6.50 - 7.00	**071688**
	B 32	7.00 - 7.50	**071689**
	B 32	7.50 - 8.00	**071690**
	B 32	8.00 - 8.50	**071691**
	B 32	8.50 - 9.00	**071692**
	B 32	9.00 - 9.50	**071693**
	B 32	9.50 - 10.00	**071542**
	B 32	10.00 - 10.50	**071543**
	B 32	10.50 - 11.00	**071544**
	B 32	11.00 - 11.50	**071545**
	B 32	11.50 - 12.00	**071546**
	B 32	12.00 - 12.50	**071547**
	B 32	12.50 - 13.00	**071548**
	B 32	13.00 - 13.50	**071549**
	B 32	13.50 - 14.00	**071550**
	B 32	14.00 - 14.50	**071551**
	B 32	14.50 - 15.00	**071552**
	B 32	15.00 - 15.50	**071553**
	B 32	15.50 - 16.00	**071554**
	B 32	16.00 - 16.50	**071555**
	B 32	16.50 - 17.00	**071556**
	B 32	17.00 - 17.50	**071557**
	B 32	17.50 - 18.00	**071558**
	B 32	18.00 - 18.50	**071559**
m	B 32	18.50 - 19.00	**071560**
	B 32	19.00 - 19.50	**071561**
	B 32	19.50 - 20.00	**071562**
	B 32	20.00 - 20.50	**071563**
	B 32	20.50 - 21.00	**071564**
	B 32	21.00 - 21.50	**071565**
	B 32	21.50 - 22.00	**071566**
	B 32	22.00 - 22.50	**071567**
	B 32	22.50 - 23.00	**071568**
	B 32	23.00 - 23.50	**071569**
	B 32	23.50 - 24.00	**071570**
	B 32	24.00 - 24.50	**071571**
	B 32	24.50 - 25.00	**071572**
	B 32	25.00 - 25.50	**071573**
	B 32	25.50 - 26.00	**071574**
	B 32	26.00 - 26.50	**071575**
	B 32	26.50 - 27.00	**071576**
	B 32	27.00 - 27.50	**071577**
	B 32	27.50 - 28.00	**071578**
	B 32	28.00 - 28.50	**071579**
	B 32	28.50 - 29.00	**071580**
	B 32	29.00 - 29.50	**071581**
	B 32	29.50 - 30.00	**071582**
	B 32	30.00 - 30.50	**071583**
	B 32	30.50 - 31.00	**071584**
	B 32	31.00 - 31.50	**071585**
	B 32	31.50 - 32.00	**071586**

Accessories for Collet Chucks

ISO 10897-A (DIN 6388-A)

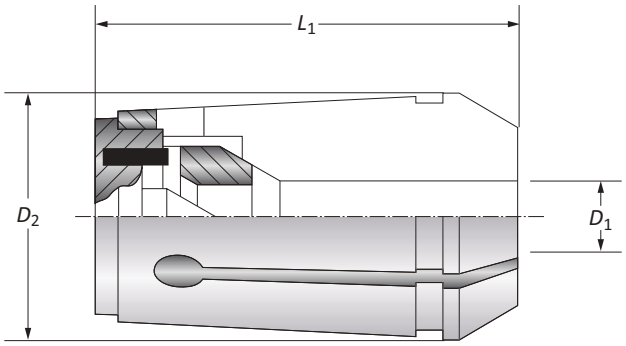

Collet Sets for Clarkson System

	Nominal Size	Standard-No.	Diameter D_1	Collet Set D_2	Collet Set L_1	Part No.
m	A 16	421 E	6.00 - 12.00	22.65	42.00	**071013**
	A 25	459 E	6.00 - 25.00	32.90	52.00	**071014**
	A 32	460 E	6.00 - 32.00	41.30	63.00	**071020**

NOTE: Recommended to use clamping nuts with ball bearings to lock collets.

Collets for Clarkson System

	Nominal Size	Diameter D_1	Part No.
	A 16	6.00	**071304**
	A 16	8.00	**071305**
	A 16	10.00	**071306**
	A 16	12.00	**071307**
	A 25	6.00	**071308**
	A 25	8.00	**071309**
	A 25	10.00	**071310**
	A 25	12.00	**071311**
	A 25	16.00	**071312**
m	A 25	20.00	**071313**
	A 25	25.00	**071684**
	A 32	6.00	**071427**
	A 32	8.00	**071428**
	A 32	10.00	**071429**
	A 32	12.00	**071430**
	A 32	16.00	**071431**
	A 32	20.00	**071432**
	A 32	25.00	**071433**
	A 32	32.00	**071685**

B10-M: 12-13
Key on B10-I: 1
B10: VI-VII

m = Metric (mm)

Accessories for Collet Chucks

ISO 15488-B (DIN 6499-B)

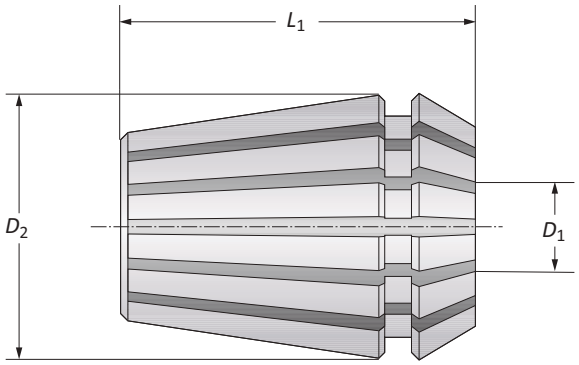

Collet Sets

	Nominal Size	Standard-No.	Diameter D_1	Collet Set D_2	Collet Set L_1	Part No.
m	ER 8	4004 E	1.00 - 5.00	8.50	13.50	**071034**
	ER 11	4008 E	1.00 - 7.00	11.00	18.00	**071028**
	ER 16	426 E	0.50 - 10.00	16.00	27.50	**071029**
	ER 25	430 E	1.50 - 16.00	25.00	34.00	**071031**
	ER 32	470 E	2.00 - 20.00	32.00	40.00	**071032**
	ER 40	472 E	3.00 - 26.00	40.00	46.00	**071033**

Collets

	Nominal Size	Diameter D_1	Part No.
	ER 8	1.00	**071986**
	ER 8	1.50	**071987**
	ER 8	2.00	**071988**
	ER 8	2.50	**071989**
	ER 8	2.60 - 3.00	**071990**
	ER 8	3.10 - 3.50	**071991**
	ER 8	3.60 - 4.00	**071992**
	ER 8	4.10 - 4.50	**071993**
	ER 8	4.60 - 5.00	**071994**
	ER 11	1.00	**071700**
m	ER 11	1.50	**071701**
	ER 11	2.00	**071702**
	ER 11	2.50	**071703**
	ER 11	2.60 - 3.00	**071704**
	ER 11	3.10 - 3.50	**071705**
	ER 11	3.60 - 4.00	**071706**
	ER 11	4.10 - 4.50	**071707**
	ER 11	4.60 - 5.00	**071708**
	ER 11	5.10 - 5.50	**071709**
	ER 11	5.60 - 6.00	**071710**
	ER 11	6.10 - 6.50	**071711**
	ER 11	6.60 - 7.00	**071712**

B10-M: 12-13
Key on B10-I: 1
B10: VI-VII

m = Metric (mm)

Accessories for Collet Chucks

ISO 15488-B (DIN 6499-B)

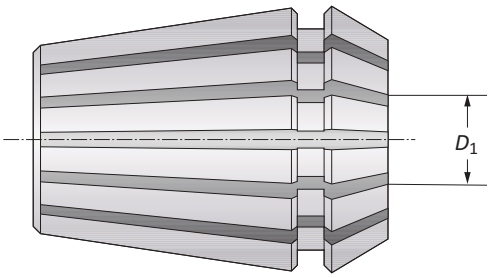

Collets

	Nominal Size	Diameter D_1	Part No.
	ER 16	0.50 - 1.00	**071713**
	ER 16	1.00 - 1.50	**071714***
	ER 16	1.00 - 2.00	**071715**
	ER 16	2.00 - 2.50	**071716***
	ER 16	2.50 - 3.00	**071717**
	ER 16	3.00 - 3.50	**071718***
	ER 16	3.50 - 4.00	**071719**
	ER 16	4.00 - 4.50	**271132***
	ER 16	4.00 - 5.00	**071720**
m	ER 16	5.00 - 5.50	**271133***
	ER 16	5.50 - 6.00	**071721**
	ER 16	6.00 - 6.50	**271134***
	ER 16	6.00 - 7.00	**071722**
	ER 16	7.00 - 7.50	**271135***
	ER 16	7.50 - 8.00	**071723**
	ER 16	8.00 - 8.50	**271136***
	ER 16	8.50 - 9.00	**071724**
	ER 16	9.00 - 9.50	**271137***
	ER 16	9.00 - 10.00	**071725**

* Items not contained in set.

B10-M: 12-13

Key on B10-I: 1

B10: VI-VII

m = Metric (mm)

Accessories for Collet Chucks

ISO 15488-B (DIN 6499-B)

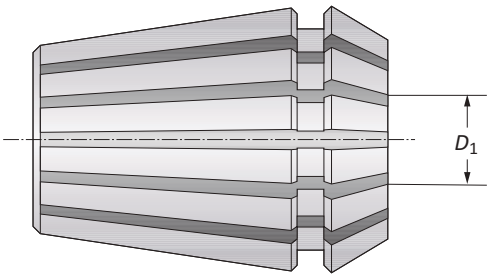

Collets

	Nominal Size	Diameter D_1	Part No.
	ER 25	1.50 - 2.00	**071743**
	ER 25	2.00 - 2.50	**071744***
	ER 25	2.50 - 3.00	**071745**
	ER 25	3.00 - 3.50	**271128***
	ER 25	3.50 - 4.00	**071746**
	ER 25	4.00 - 4.50	**271129***
	ER 25	4.50 - 5.00	**071747**
	ER 25	5.00 - 5.50	**271130***
	ER 25	5.50 - 6.00	**071748**
	ER 25	6.00 - 6.50	**271131***
	ER 25	6.50 - 7.00	**071749**
	ER 25	7.00 - 8.00	**071750**
	ER 25	8.00 - 9.00	**071751**
	ER 25	9.00 - 10.00	**071752**
	ER 25	10.00 - 11.00	**071753**
	ER 25	11.00 - 12.00	**071754**
	ER 25	12.00 - 13.00	**071755**
	ER 25	13.00 - 14.00	**071756**
	ER 25	14.00 - 15.00	**071757**
	ER 25	15.00 - 16.00	**071758**
ⓜ	ER 32	2.00 - 3.00	**071761**
	ER 32	3.00 - 4.00	**071762**
	ER 32	4.00 - 5.00	**071763**
	ER 32	5.00 - 6.00	**071764**
	ER 32	6.00 - 7.00	**071765**
	ER 32	7.00 - 8.00	**071766**
	ER 32	8.00 - 9.00	**071767**
	ER 32	9.00 - 10.00	**071768**
	ER 32	10.00 - 11.00	**071769**
	ER 32	11.00 - 12.00	**071770**
	ER 32	12.00 - 13.00	**071771**
	ER 32	13.00 - 14.00	**071772**
	ER 32	14.00 - 15.00	**071773**
	ER 32	15.00 - 16.00	**071774**
	ER 32	16.00 - 17.00	**071775**
	ER 32	17.00 - 18.00	**071776**
	ER 32	18.00 - 19.00	**071777**
	ER 32	19.00 - 20.00	**071778**
	ER 32	17.00 - 18.00	**071776**
	ER 32	18.00 - 19.00	**071777**
	ER 32	19.00 - 20.00	**071778**

* Items not contained in set.

B10-M: 12-13

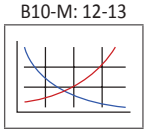

B10: VI-VII

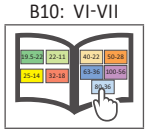

Key on B10-I: 1

ⓜ = Metric (mm)

Accessories for Collet Chucks

ISO 15488-B (DIN 6499-B)

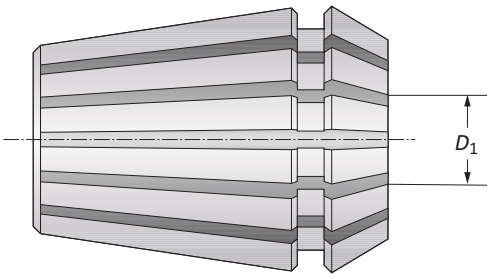

	Nominal Size	Diameter D_1	Part No.
m	ER 40	3.00 - 4.00	**071779**
	ER 40	4.00 - 5.00	**071780**
	ER 40	5.00 - 6.00	**071781**
	ER 40	6.00 - 7.00	**071782**
	ER 40	7.00 - 8.00	**071783**
	ER 40	8.00 - 9.00	**071784**
	ER 40	9.00 - 10.00	**071785**
	ER 40	10.00 - 11.00	**071786**
	ER 40	11.00 - 12.00	**071787**
	ER 40	12.00 - 13.00	**071788**
	ER 40	13.00 - 14.00	**071789**
	ER 40	14.00 - 15.00	**071790**
	ER 40	15.00 - 16.00	**071791**
	ER 40	16.00 - 17.00	**071792**
	ER 40	17.00 - 18.00	**071793**
	ER 40	18.00 - 19.00	**071794**
	ER 40	19.00 - 20.00	**071795**
	ER 40	20.00 - 21.00	**071796**
	ER 40	21.00 - 22.00	**071797**
	ER 40	22.00 - 23.00	**071798**
	ER 40	23.00 - 24.00	**071799**
	ER 40	24.00 - 25.00	**071800**
	ER 40	25.00 - 26.00	**071801**

B10-M: 12-13
Key on B10-I: 1
B10: VI-VII

m = Metric (mm)

Collet Sets for Taps DIN 371/374/376

ISO 15488-B (DIN 6499-B)

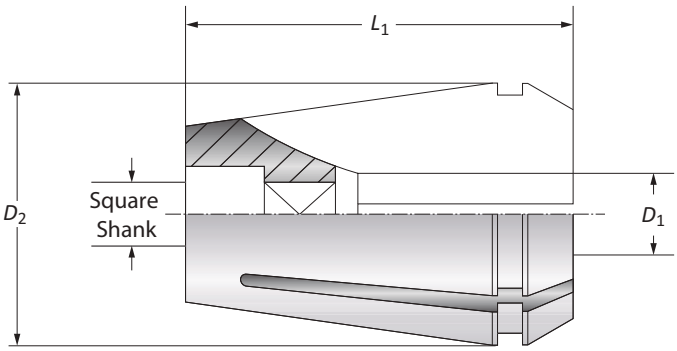

Collet Sets

	Nominal Size	Standard-No.	Clamping Range D_1	Collet Set D_2	Collet Set L_1	Part No.
m	ER 16	426 EGB	4.50 - 7.00	16.00	27.50	**071045**
	ER 25	430 EGB	4.50 - 12.00	25.00	34.00	**071047**
	ER 32	470 EGB	4.50 - 16.00	32.00	40.00	**071048**
	ER 40	472 EGB	7.00 - 20.00	40.00	46.00	**071049**

NOTE: To lock these collets, we recommend using the clamping nuts with sliding ring for higher clamping forces.

Taps

	Shank D_1	Shank Square Shank	Tap DIN 371	Tap DIN 374	Tap DIN 376
	4.50	3.40	M 4	M 6 x...	M 6
	5.50	4.30	–	M 7 x...	M 7
	6.00	4.90	M 4,5/5/6	M 8 x...	M 8
	7.00	5.50	M 7	M 9/10 x...	M 9/10
	8.00	6.20	M 8	M 6 x...	M 11
	9.00	7.00	M 9	M 6 x...	M 12
m	10.00	8.00	M 10	–	–
	11.00	9.00	–	M 14 x...	M 14
	12.00	9.00	M 12	M 16 x...	M 16
	14.00	11.00	–	M 18 x...	M 18
	16.00	12.00	–	M 20 x...	M 20
	18.00	14.00	–	M 22/24 x...	M 22/24
	20.00	16.00	–	M 27 x...	M 27

B10-M: 12-13
Key on B10-I: 1
B10: VI-VII

m = Metric (mm)

Accessories for Collet Sets for Taps DIN 371/374/376

ISO 15488-B (DIN 6499-B)

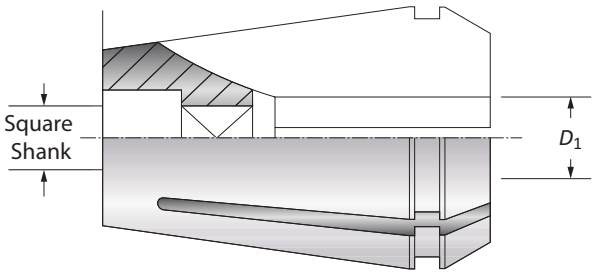

	Nominal Size	Suitable Taps D_1	Suitable Taps Square Shank	Part No.
m	ER 16	4.50	3.40	**071901**
	ER 16	5.50	4.30	**071902**
	ER 16	6.00	4.90	**071903**
	ER 16	7.00	5.50	**071904**
	ER 25	4.50	3.40	**071912**
	ER 25	5.50	4.30	**071913**
	ER 25	6.00	4.90	**071914**
	ER 25	7.00	5.50	**071915**
	ER 25	8.00	6.20	**071916**
	ER 25	9.00	7.00	**071917**
	ER 25	10.00	8.00	**071918**
	ER 25	11.00	9.00	**071919**
	ER 25	12.00	9.00	**071920**
	ER 32	4.50	3.40	**071921**
	ER 32	5.50	4.30	**071922**
	ER 32	6.00	4.90	**071923**
	ER 32	7.00	5.50	**071924**
	ER 32	8.00	6.20	**071925**
	ER 32	9.00	7.00	**071926**
	ER 32	10.00	8.00	**071927**
	ER 32	11.00	9.00	**071928**
	ER 32	12.00	9.00	**071929**
	ER 32	14.00	11.00	**071930**
	ER 32	16.00	12.00	**071931**
	ER 40	7.00	5.50	**071932**
	ER 40	8.00	6.20	**071933**
	ER 40	9.00	7.00	**071934**
	ER 40	10.00	8.00	**071935**
	ER 40	11.00	9.00	**071936**
	ER 40	12.00	9.00	**071937**
	ER 40	14.00	11.00	**071938**
	ER 40	16.00	12.00	**071939**
	ER 40	18.00	14.50	**071940**
	ER 40	20.00	16.00	**071941**

B10-M: 12-13
Key on B10-I: 1
B10: VI-VII

m = Metric (mm)

Accessories for Collet Chucks: ISO 15488-B (DIN 6499-B)

Collets

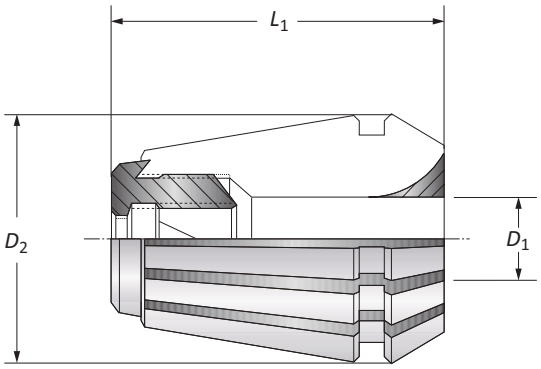

Collets for Mill Cutters with Pull Thread System

	Nominal Size	Standard-No.	Clamping Range D_2	Collet L_1	Collet D_1	Part No.
m	ER 32	470 ECL	32.00	46.00	6.00 - 16.00	**071052**
	ER 40	472 ECL	40.00	52.00	6.00 - 25.00	**071053**

Collets

	Nominal Size	Collet D_1	Part No.
m	ER 32	6.00	**071826**
	ER 32	8.00	**071827**
	ER 32	10.00	**071828**
	ER 32	12.00	**071829**
	ER 32	16.00	**071830**
	ER 40	6.00	**071831**
	ER 40	8.00	**071832**
	ER 40	10.00	**071833**
	ER 40	12.00	**071834**
	ER 40	16.00	**071835**
	ER 40	20.00	**071836**
	ER 40	25.00	**071837**

NOTE: To lock these collets, we recommend using the clamping nuts with sliding ring for higher clamping forces.

B10-M: 12-13
Key on B10-I: 1
B10: VI-VII

m = Metric (mm)

Accessories for Collet Chucks: ISO 10897 (DIN 6388)

Clamping Nuts

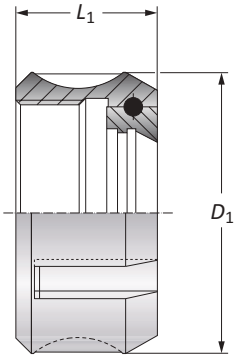

Clamping Nuts: DIN 6388 / ISO 10897 - 1:10

	Clamping Nut				
Nominal Size	D_1	L_1	Clamping Range	Torque	Part No.
16	43.00	24.00	2.00 - 16.00	100 Nm	**068048**
25	60.00	30.00	2.00 - 25.00	180 Nm	**068052**
32	72.00	33.50	4.00 - 32.00	220 Nm	**161099**

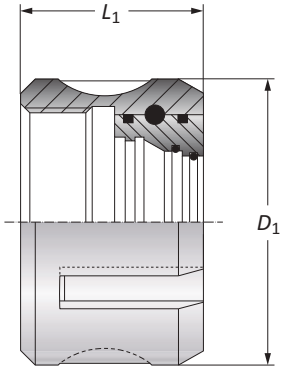

Clamping Nuts for Sealing Discs: DIN 6388 / ISO 10897 - 1:10

	Clamping Nut				
Nominal Size	D_1	L_1	Clamping Range	Torque	Part No.
16	43.00	31.50	2.00 - 16.00	100 Nm	**275001**
25	60.00	38.00	2.00 - 25.00	180 Nm	**275003**
32	72.00	42.00	4.00 - 32.00	220 Nm	**276001**

NOTE: With ball bearing, for use with sealing discs.

B10-M: 12-13
Key on B10-I: 1
B10: VI-VII

= Metric (mm)

Accessories for Collet Chucks: ISO 10897 (DIN 6388)

Clamping Nuts

Mini Clamping Nuts

	Nominal Size	Clamping Nut D_1	L_1	Clamping Range	Torque	Part No.
m	ER 08	12.00	10.80	1.00 - 4.00	8 Nm	**415357**
	ER 11	16.00	12.00	1.00 - 7.00	16 Nm	**415358**
	ER 16	22.00	18.00	1.00 - 10.00	25 Nm	**415359**

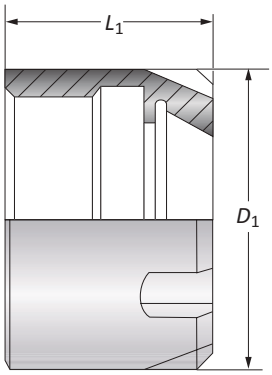

Clamping Nuts for Erickson Collet Chuck System

	Nominal Size	Clamping Nut D_1	L_1	Clamping Range	Part No.
m	6	14.00	28.00	1.00 - 6.50	**162095**
	10	21.00	36.00	1.00 - 10.00	**162093**

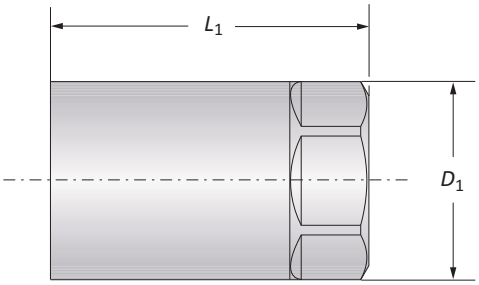

B10-M: 12-13
Key on B10-I: 1
B10: VI-VII

m = Metric (mm)

Accessories for Collet Chucks: ISO 15488 (DIN 6499)

Clamping Nuts

One Piece Clamping Nuts: DIN 6499 / ISO 15488 - 8°

	Nominal Size	Clamping Nut D_1	L_1	Clamping Range	Torque	Part No.
m	ER 16	28.00	17.50	1.00 - 10.00	60 Nm	**215922**
	ER 25	42.00	20.00	2.00 - 16.00	100 Nm	**215924**
	ER 32	50.00	22.50	2.00 - 20.00	140 Nm	**215925**
	ER 40	63.00	25.50	3.00 - 26.00	180 Nm	**215926**

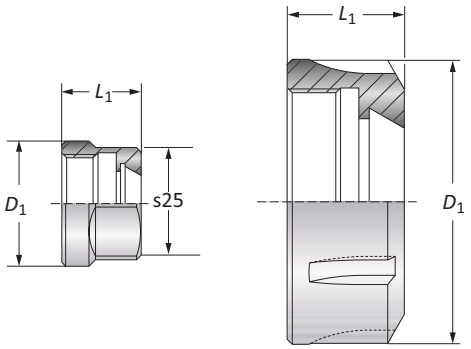

Clamping Nuts with Sliding Ring: DIN 6499 / ISO 15488 - 8°

	Nominal Size	Clamping Nut D_1	L_1	Clamping Range	Torque	Part No.
m	ER 16	28.00	20.30	1.00 - 10.00	60 Nm	**315015**
	ER 25	42.00	22.40	2.00 - 16.00	100 Nm	**315016**
	ER 32	50.00	25.00	2.00 - 20.00	140 Nm	**315017**
	ER 40	63.00	28.30	3.00 - 26.00	180 Nm	**315018**

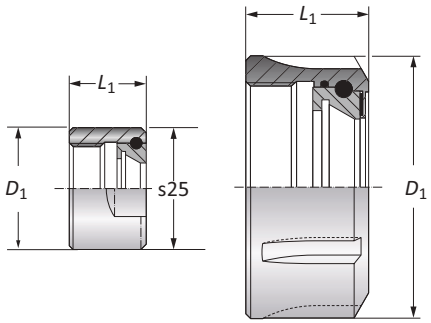

One Piece Clamping Nuts for use with Sealing Disks: DIN 6499 / ISO 15488 - 8°

	Nominal Size	Clamping Nut D_1	L_1	Clamping Range	Torque	Part No.
m	ER 16	28.00	25.00	1.00 - 10.00	60 Nm	**277001**
	ER 25	42.00	27.50	2.00 - 16.00	100 Nm	**277005**
	ER 32	50.00	30.50	2.00 - 20.00	140 Nm	**277007**
	ER 40	63.00	34.00	3.00 - 26.00	180 Nm	**278001**

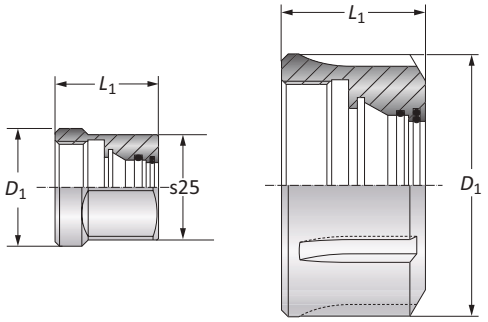

Clamping Nuts with Sliding Ring for use with Sealing Disks: DIN 6499 / ISO 15488 - 8°

	Nominal Size	Clamping Nuts: ISO 15488 (DIN 6499) D_1	L_1	Clamping Range	Torque	Part No.
m	ER 16	28.00	25.00	1.00 - 10.00	60 Nm	**277002**
	ER 25	42.00	28.50	2.00 - 16.00	100 Nm	**277006**
	ER 32	50.00	31.50	2.00 - 20.00	140 Nm	**277008**
	ER 40	63.00	35.00	3.00 - 26.00	180 Nm	**278002**

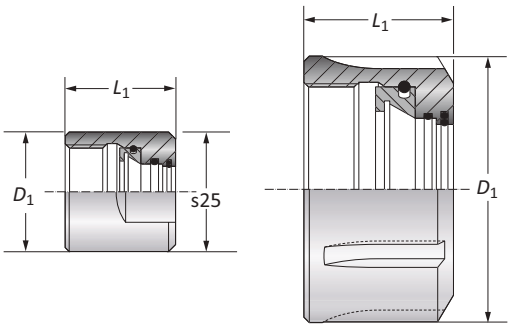

B10-M: 12-13
Key on B10-I: 1
B10: VI-VII

m = Metric (mm)

Sealing Disks for Collet Chucks: ISO 10897 (DIN 6388)

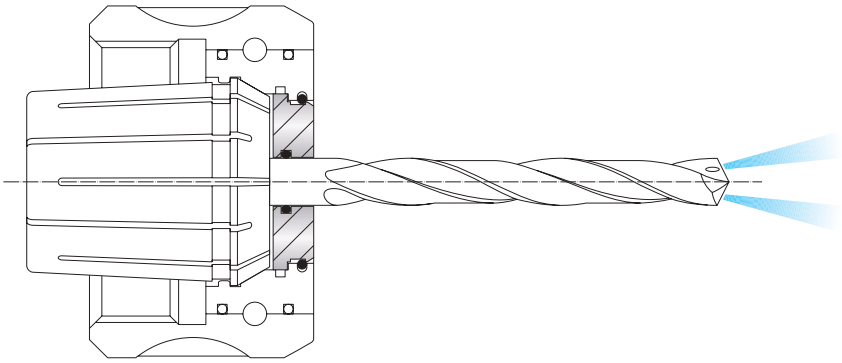

	Sealing Disk		Sealing Disk		Sealing Disk		Sealing Disk	
Nominal Size	Diameter	Part No.	Diameter	Part No.	Diameter	Part No.	Diameter	Part No.
16	2.50 - 3.00	**275010**	6.00 - 6.50	**275017**	9.50 - 10.00	**275024**	13.00 - 13.50	**275031**
16	3.00 - 3.50	**275011**	6.50 - 7.00	**275018**	10.00 - 10.50	**275025**	13.50 - 14.00	**275032**
16	3.50 - 4.00	**275012**	7.00 - 7.50	**275019**	10.50 - 11.00	**275026**	14.00 - 14.50	**275033**
16	4.00 - 4.50	**275013**	7.50 - 8.00	**275020**	11.00 - 11.50	**275027**	14.50 - 15.00	**275034**
16	4.50 - 5.00	**275014**	8.00 - 8.50	**275021**	11.50 - 12.00	**275028**	15.00 - 15.50	**275035**
16	5.00 - 5.50	**275015**	8.50 - 9.00	**275022**	12.00 - 12.50	**275029**	15.50 - 16.00	**275036**
16	5.50 - 6.00	**275016**	9.00 - 9.50	**275023**	12.50 - 13.00	**275030**	–	**–**
25	2.50 - 3.00	**275040**	8.50 - 9.00	**275052**	14.50 - 15.00	**275064**	20.50 - 21.00	**275076**
25	3.00 - 3.50	**275041**	9.00 - 9.50	**275053**	15.00 - 15.50	**275065**	21.00 - 21.50	**275077**
25	3.50 - 4.00	**275042**	9.50 - 10.00	**275054**	15.50 - 16.00	**275066**	21.50 - 22.00	**275078**
25	4.00 - 4.50	**275043**	10.00 - 10.50	**275055**	16.00 - 16.50	**275067**	22.00 - 22.50	**275079**
25	4.50 - 5.00	**275044**	10.50 - 11.00	**275056**	16.50 - 17.00	**275068**	22.50 - 23.00	**275080**
25	5.00 - 5.50	**275045**	11.00 - 11.50	**275057**	17.00 - 17.50	**275069**	23.00 - 23.50	**275081**
25	5.50 - 6.00	**275046**	11.50 - 12.00	**275058**	17.50 - 18.00	**275070**	23.50 - 24.00	**275082**
25	6.00 - 6.50	**275047**	12.00 - 12.50	**275059**	18.00 - 18.50	**275071**	24.00 - 24.50	**275083**
25	6.50 - 7.00	**275048**	12.50 - 13.00	**275060**	18.50 - 19.00	**275072**	24.50 - 25.00	**275084**
25	7.00 - 7.50	**275049**	13.00 - 13.50	**275061**	19.00 - 19.50	**275073**	–	**–**
25	7.50- 8.00	**275050**	13.50 - 14.00	**275062**	19.50 - 20.00	**275074**	–	**–**
25	8.00 - 8.50	**275051**	14.00 - 14.50	**275063**	20.00 - 20.50	**275075**	–	**–**
32	3.50 - 4.00	**276005**	11.00 - 11.50	**276020**	18.50 - 19.00	**276035**	26.00 - 26.50	**276050**
32	4.00 - 4.50	**276006**	11.50 - 12.00	**276021**	19.00 - 19.50	**276036**	26.50 - 27.00	**276051**
32	4.50 - 5.00	**276007**	12.00 - 12.50	**276022**	19.50 - 20.00	**276037**	27.50 - 28.00	**276052**
32	5.00 - 5.50	**276008**	12.50 - 13.00	**276023**	20.00 - 20.50	**276038**	27.50 - 28.00	**276053**
32	5.50 - 6.00	**276009**	13.00 - 13.50	**276024**	20.50 - 21.00	**276039**	28.00 - 28.50	**276054**
32	6.00 - 6.50	**276010**	13.50 - 14.00	**276025**	21.00- 21.50	**276040**	28.50 - 29.00	**276055**
32	6.50 - 7.00	**276011**	14.00 - 14.50	**276026**	21.50 - 22.00	**276041**	29.00 - 29.50	**276056**
32	7.00 - 7.50	**276012**	14.50 - 15.00	**276027**	22.00 - 22.50	**276042**	29.50 - 30.00	**276057**
32	7.50 - 8.00	**276013**	15.00 - 15.50	**276028**	22.50 - 23.00	**276043**	30.00 - 30.50	**276058**
32	8.00 - 8.50	**276014**	15.50 - 16.00	**276029**	23.00 - 23.50	**276044**	30.50 - 31.00	**276059**
32	8.50 - 9.00	**276015**	16.00 - 16.50	**276030**	23.50 - 24.00	**276045**	31.00 - 31.50	**276060**
32	9.00 - 9.50	**276016**	16.50 - 17.00	**276031**	24.00 - 24.50	**276046**	31.50 - 32.00	**276061**
32	9.50 - 10.00	**276017**	17.00 - 17.50	**276032**	24.50 - 25.00	**276047**	–	**–**
32	10.00 - 10.50	**276018**	17.50 - 18.00	**276033**	25.00 - 25.50	**276048**	–	**–**
32	10.50 - 11.00	**276019**	18.00 - 18.50	**276034**	25.50 - 26.00	**276049**	–	**–**

B10-M: 12-13
Key on B10-I: 1
B10: VI-VII

m = Metric (mm)

Sealing Disks Collet Chucks: ISO 15488 (DIN 6499)

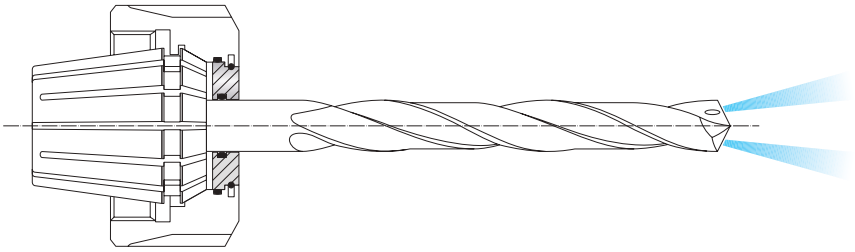

	Sealing Disk		Sealing Disk		Sealing Disk		Sealing Disk	
Nominal Size	Diameter	Part No.	Diameter	Part No.	Diameter	Part No.	Diameter	Part No.
ER 16	2.50 - 3.00	**277010**	4.50 - 5.00	**277014**	6.50 - 7.00	**277018**	8.50 - 9.00	**277022**
ER 16	3.00 - 3.50	**277011**	5.00 - 5.50	**277015**	7.00 - 7.50	**277019**	9.00 - 9.50	**277023**
ER 16	3.50 - 4.00	**277012**	5.50 - 6.00	**277016**	7.50 - 8.00	**277020**	9.50 - 10.00	**277024**
ER 16	4.00 - 4.50	**277013**	6.00 - 6.50	**277017**	8.00 - 8.50	**277021**	–	**–**
ER 25	2.50 - 3.00	**277025**	6.00 - 6.50	**277032**	9.50 - 10.00	**277039**	13.00 - 13.50	**277046**
ER 25	3.00 - 3.50	**277026**	6.50 - 7.00	**277033**	10.00 - 10.50	**277040**	13.50 - 14.00	**277047**
ER 25	3.50 - 4.00	**277027**	7.00 - 7.50	**277034**	10.50 - 11.00	**277041**	14.00 - 14.50	**277048**
ER 25	4.00 - 4.50	**277028**	7.50 - 8.00	**277035**	11.00 - 11.50	**277042**	14.50 - 15.00	**277049**
ER 25	4.50 - 5.00	**277029**	8.00 - 8.50	**277036**	11.50 - 12.00	**277043**	15.00 - 15.50	**277050**
ER 25	5.00 - 5.50	**277030**	8.50 - 9.00	**277037**	12.00 - 12.50	**277044**	15.50 - 16.00	**277051**
ER 25	5.50 - 6.00	**277031**	9.00 - 9.50	**277038**	12.50 - 13.00	**277045**	–	**–**
ER 32	2.50 - 3.00	**277055**	7.00 - 7.50	**277064**	11.50 - 12.00	**277073**	16.00 - 16.50	**277082**
ER 32	3.00 - 3.50	**277056**	7.50 - 8.00	**277065**	12.00 - 12.50	**277074**	16.50 - 17.00	**277083**
ER 32	3.50 - 4.00	**277057**	8.00 - 8.50	**277066**	12.50 - 13.00	**277075**	17.00 - 17.50	**277084**
ER 32	4.00 - 4.50	**277058**	8.50 - 9.00	**277067**	13.00 - 13.50	**277076**	17.50 - 18.00	**277085**
ER 32	4.50 - 5.00	**277059**	9.00 - 9.50	**277068**	13.50 - 14.00	**277077**	18.00 - 18.50	**277086**
ER 32	5.00 - 5.50	**277060**	9.50 - 10.00	**277069**	14.00 - 14.50	**277078**	18.50 - 19.00	**277087**
ER 32	5.50 - 6.00	**277061**	10.00 - 10.50	**277070**	14.50 - 15.00	**277079**	19.00 - 19.50	**277088**
ER 32	6.00 - 6.50	**277062**	10.50 - 11.00	**277071**	15.00 - 15.50	**277080**	19.50 - 20.00	**277089**
ER 32	6.50 - 7.00	**277063**	11.00 - 11.50	**277072**	15.50 - 16.00	**277081**	–	**–**
ER 40	2.50 - 3.00	**278005**	8.50 - 9.00	**278017**	14.50 - 15.00	**278029**	20.50 - 21.00	**278041**
ER 40	3.00 - 3.50	**278006**	9.00 - 9.50	**278018**	15.00 - 15.50	**278030**	21.00 - 21.50	**278042**
ER 40	3.50 - 4.00	**278007**	9.50 - 10.00	**278019**	15.50 - 16.00	**278031**	21.50 - 22.00	**278043**
ER 40	4.00 - 4.50	**278008**	10.00 - 10.50	**278020**	16.00- 16.50	**278032**	22.00 - 22.50	**278044**
ER 40	4.50 - 5.00	**278009**	10.50 - 11.00	**278021**	16.50 - 17.00	**278033**	22.50 - 23.00	**278045**
ER 40	5.00 - 5.50	**278010**	11.00 - 11.50	**278022**	17.00 - 17.50	**278034**	23.00 - 23.50	**278046**
ER 40	5.50 - 6.00	**278011**	11.50 - 12.00	**278023**	17.50 - 18.00	**278035**	23.50 - 24.00	**278047**
ER 40	6.00 - 6.50	**278012**	12.00 - 12.50	**278024**	18.00 - 18.50	**278036**	24.00 - 24.50	**278048**
ER 40	6.50 - 7.00	**278013**	12.50 - 13.00	**278025**	18.50 - 19.00	**278037**	24.50 - 25.00	**278049**
ER 40	7.00 - 7.50	**278014**	13.00 - 13.50	**278026**	19.00 - 19.50	**278038**	25.00 - 25.50	**278050**
ER 40	7.50 - 8.00	**278015**	13.50 - 14.00	**278027**	19.50 - 20.00	**278039**	25.50 - 26.00	**278051**
ER 40	8.00 - 8.50	**278016**	14.00 - 14.50	**278028**	20.00 - 20.50	**278040**	–	**–**

B10-M: 12-13

Key on B10-I: 1

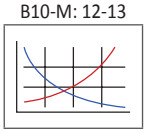

B10: VI-VII

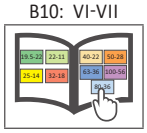

ⓜ = Metric (mm)

Accessories for Milling Machine Arbors

Accessories for Milling Machine Arbors

Shell-Mill Adapter	Part No. 1 Clutch Drive Ring	2 Axial Drive Key	3 Retaining Screw
13	**115708**	**115709**	**115707**
16	**115696**	**215608**	**115697**
22	**115341**	**215609**	**115345**
27	**115342**	**215610**	**115346**
32	**115343**	**215611**	**115347**
40	**115344**	**215612**	**115348**

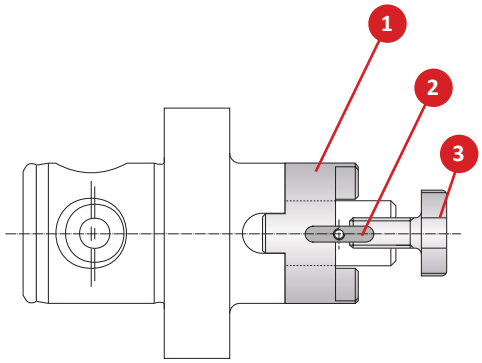

Accessories for Milling Machine Arbors

Shell-Mill Adapter	Part No. 1 Drive Key	2 Cap Screw	3 Retaining Screw
16	**215701**	**115566**	**115697**
22	**215702**	**108109**	**115345**
27	**215703**	**108109**	**115346**
32	**215704**	**115147**	**115347**
40	**215705**	**116152**	**115348**
60	**115643**	**115237**	–

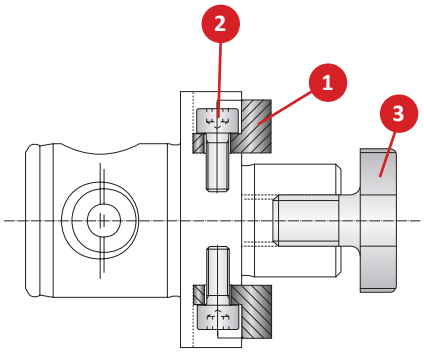

Accessories for Holding Arbors

Adapter Sleeves	Part No. 1 Cap Screw	Service Key
209022	**115929**	s5
209023	**115930**	s7
209024	**115932**	s8
209025	**115933**	s5
209026	**115169**	s8
209027	**115934**	s10
209028	**115936**	s12

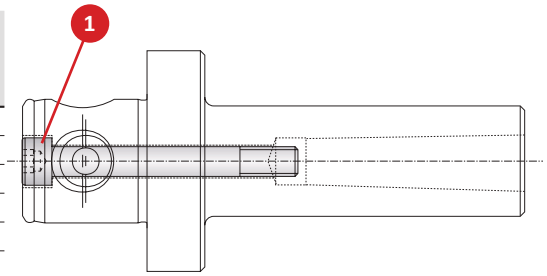

B10-M: 12-13

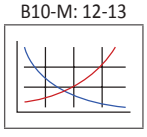

B10: VI-VII

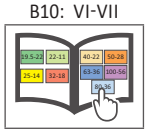

Key on B10-I: 1

Reducing Sleeves for Hydraulic Clamping Chucks

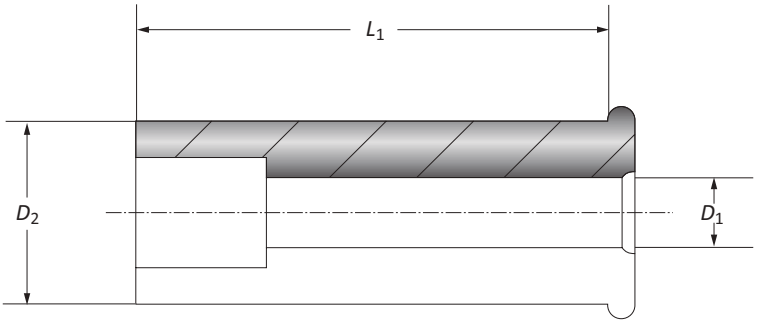

	Nominal Size	Reducing Sleeve		
	D_2	D_1	L_1	Part No.
m	20.00	3.00	50.50	**271045**
	20.00	4.00	50.50	**271046**
	20.00	5.00	50.50	**271047**
	20.00	6.00	50.50	**271070**
	20.00	7.00	50.50	**271049**
	20.00	8.00	50.50	**271004**
	20.00	9.00	50.50	**271050**
	20.00	10.00	50.50	**271005**
	20.00	11.00	50.50	**271051**
	20.00	12.00	50.50	**271073**
	20.00	13.00	50.50	**271052**
	20.00	14.00	50.50	**271074**
	20.00	15.00	50.50	**271018**
	20.00	16.00	50.50	**271008**

NOTE: For cylindrical shanks with shank tolerance h6 for clamping diameter 3 mm and 8 mm and with shank tolerance h7 for clamping diameter 10 mm - 32 mm.
NOTE: Reduction sleeve with adjustable stop.

B10-M: 12-13
Key on B10-I: 1
B10: VI-VII

m = Metric (mm)

Quick Change Adapters

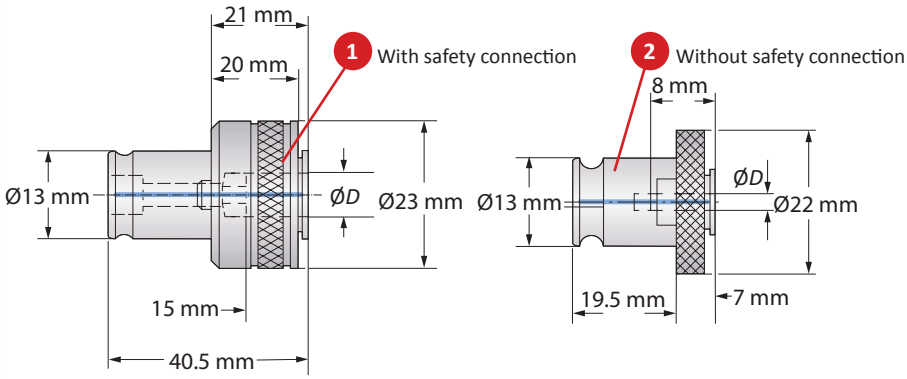

Shank Dimensions			Quick Change Adapter								Part No.	
	Nominal Size	*D* x Square Shank	DIN 352	DIN 353	DIN 371	DIN 374	DIN 376	DIN 2182	DIN 2183	Torque Setting	1	2
ⓜ	0	2.10 x 2.50	M 1	–	M 1	–	M 3.5	1/16"	–	1.5 - 2	**233070**	**K24358**
	0	2.10 x 2.80	M 2	–	M 2	M 4	M 4	3/32"	5/32"	2 - 3	**233071**	**K24276**
	0	2.70 x 3.50	M 3	–	M 3	M 5	M 5	1/8"	–	4 - 6	**233072**	**K24277**
	0	3.00 x 4.00	M 3.5	–	M 3.5	–	–	–	–	1.5 - 2	**233073**	**K24278**
	0	3.40 x 4.50	M 4	–	M 4	M 6	M 6	5/32"	1/4"	6 - 9	**233074**	**K24279**
	0	4.90 x 6.00	M 8	–	–	M 8	M 8	–	–	16 - 21	**233075**	**K24280**
	0	5.50 x 7.00	M 10	G 1/8"	–	M 10	M 10	1/4"	3/8"	27 - 32	**233076**	**K24281**
	0	6.20 x 8.00	–	–	M 8	–	–	5/16"	7/16"	16 - 21	**233077**	**K24391**

NOTE: Quick change adapters are typically set to the torque value shown in the table.

B10-M: 12-13
B10: VI-VII
Key on B10-I: 1

ⓜ = Metric (mm)

Quick Change Adapters

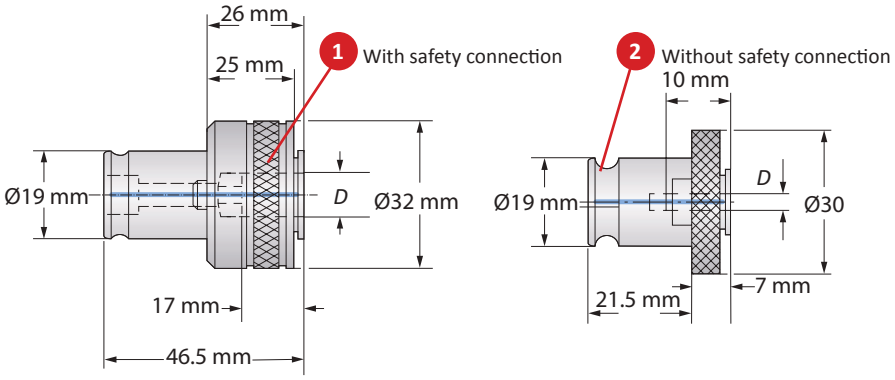

Quick Change Adapters

	Shank Dimensions		Quick Change Adapter								Part No.	
	Nominal Size	*D* x Square Shank	DIN 352	DIN 353	DIN 371	DIN 374	DIN 376	DIN 2182	DIN 2183	Torque Setting	1	2
m	1	2.10 x 2.80	M 2	–	M 2.8	M 4	M 4	3/32"	5/32"	2 - 3	**K17847**	**K23259**
	1	2.70 x 3.50	M 3	–	M 3.5	M 5	M 5	1/8"	–	4 - 6	**233001**	**K18455**
	1	3.00 x 4.00	M 3.5	–	M 3.5	–	–	–	–	1.5 - 2	**233002**	**K22439**
	1	3.40 x 4.50	M 4	–	M 4	M 6	M 6	5/32"	1/4"	6 - 9	**233003**	**K16414**
	1	4.90 x 6.00	M 8	–	–	M 8	M 8	–	–	16 - 21	**233004**	**K16415**
	1	5.50 x 7.00	M 10	–	–	M 10	M 10	1/4"	3/8"	27 - 32	**233005**	**K16418**
	1	6.20 x 8.00	–	G 1/8"	M 8	–	–	5/16"	7/16"	16 - 21	**233006**	**K16416**
	1	7.00 x 9.00	M 12	–	–	M 12	M 12	3/8"	1/2"	37 - 44	**233007**	**K18454**
	1	8.00 x 10.00	–	–	M 10	–	–	–	–	27 - 32	**233008**	**K16417**
	1	9.00 x 11.00	M 14	G 1/4"	–	M 14	M 14	–	9/16"	50 - 53	**233009**	**K22440**

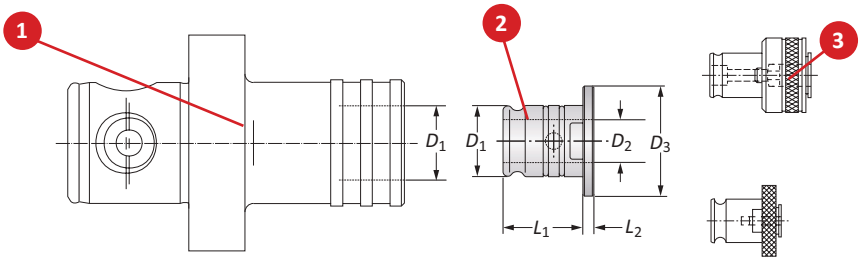

Reducers for Quick Change Adapters

	1 Tapping Chuck		2 Quick Change Adapter		3. Reducer						
	Nominal Size	D_1	Nominal Size	D_1	D_1	D_2	D_3	L_1	L_2	Weight	Part No.
m	1	19.00	0	13.00	19.00	13.00	30.00	21.50	4.00	0.12 (kg)	**161038**
	2	31.00	1	19.00	31.00	19.00	48.00	35.00	5.00	0.48 (kg)	**162094**

B10-M: 12-13

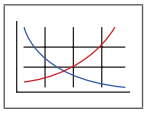

Key on B10-I: 1

B10: VI-VII

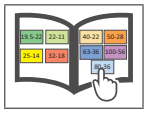

m = Metric (mm)

Quick Change Adapters

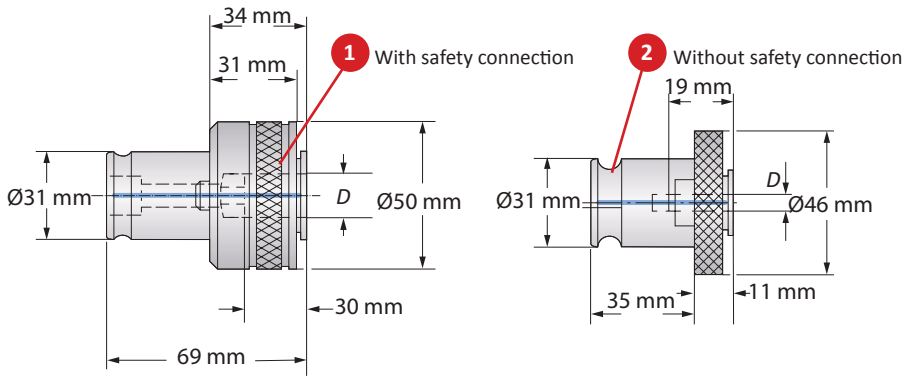

Quick Change Adapters

	Shank Dimensions		Quick Change Adapter								Part No.	
	Nominal Size	*D* x Square Shank	DIN 352	DIN 353	DIN 371	DIN 374	DIN 376	DIN 2182	DIN 2183	Torque Setting	1	2
m	2	5.50 x 7.00	M 10	G ⅛"	–	M 10	M 10	¼"	⅜"	24 - 32	**233020**	**K15282**
	2	6.20 x 8.00	–	–	M 8	–	–	5/16"	7/16"	16 - 21	**233021**	**K15283**
	2	7.00 x 9.00	M 12	–	–	M 12	M 12	⅜"	½"	37 - 44	**233022**	**K15284**
	2	8.00 x 10.00	–	–	M 10	–	–	–	–	27 - 32	**233023**	**K18456**
	2	9.00 x 11.00	M 14	G ¼"	–	M 14	M 14	–	9/16"	50 - 53	**233024**	**K16419**
	2	9.00 x 12.00	M 16	G ⅜"	–	M 16	M 16	–	⅝"	55 - 58	**233025**	**K15285**
	2	11.00 x 14.00	M 18	–	–	M 18	M 18	–	11/16"	85 - 90	**233026**	**K16420**
	2	12.00 x 16.00	M 20	G ½"	–	M 20	M 20	–	13/16"	110 - 115	**233027**	**K15286**
	2	14.50 x 18.00	M 24	–	–	M 24	M 24	–	15/16"	110 - 115	**233028**	**K18457**

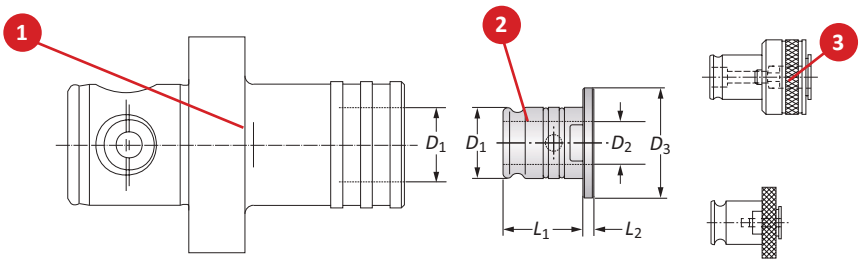

Reducers for Quick Change Adapters

	1 Tapping Chuck		2 Quick Change Adapter		3 Reducer						
	Nominal Size	D_1	Nominal Size	D_1	D_1	D_2	D_3	L_1	L_2	Weight	Part No.
m	1	19.00	0	13.00	19.00	13.00	30.00	21.50	4.00	0.12 (kg)	**161038**
	2	31.00	1	19.00	31.00	19.00	48.00	35.00	5.00	0.48 (kg)	**162094**

B10-M: 12-13
Key on B10-I: 1
B10: VI-VII

m = Metric (mm)

Quick Change Adapters

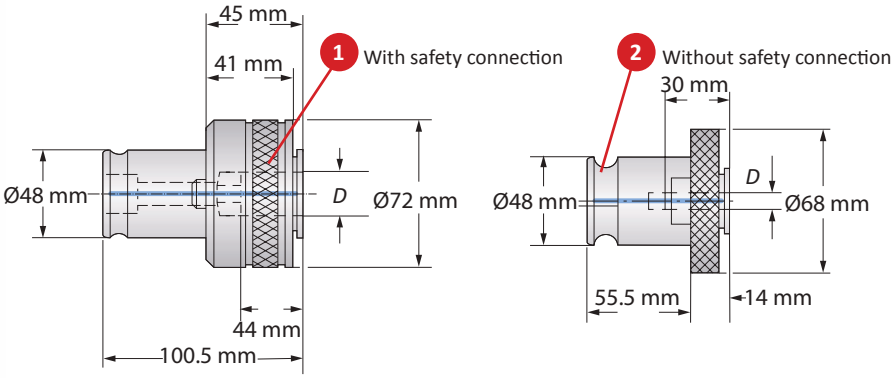

Shank Dimensions			Quick Change Adapters								Part No.	
	Nominal Size	*D* x Square Shank	DIN 352	DIN 353	DIN 371	DIN 374	DIN 376	DIN 2182	DIN 2183	Torque Setting	1	2
m	3	9.00 x 11.00	M 14	G ¼"	–	M 14	M 14	–	9/18"	50 - 53	**233040**	**K22434**
	3	9.00 x 12.00	M 16	G ⅜"	–	M 16	M 16	–	⅝"	55 - 58	**233041**	**K22435**
	3	11.00 x 14.00	M 18	–	–	M 18	M 18	–	11/16"	85 - 90	**233042**	**K22436**
	3	12.00 x 16.00	M 20	G ½"	–	M 20	M 20	–	13/18"	100 - 106	**233043**	**K22437**
	3	14.50 x 18.00	M 24	–	–	M 24	M 24	–	15/16"	140 - 150	**233044**	**K16421**
	3	16.50 x 20.00	M 27	G ¾"	–	M 27	M 27	–	1"	150 - 160	**233045**	**K16422**
	3	18.00 x 22.00	M 30	G ⅞"	–	M 30	M 30	–	1 ⅛"	240 - 250	**233046**	**K16423**
	3	22.00 x 25.00	M 33	G 1"	–	M 33	M 33	–	1 ¼"	260 - 270	**233047**	**K16424**
	3	22.00 x 28.00	M 36	G 1 ⅛"	–	M 36	M 36	–	1 ⅜"	260 - 270	**233048**	**K22438**

B10-M: 12-13

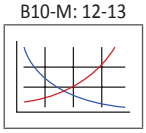

Key on B10-I: 1

B10: VI-VII

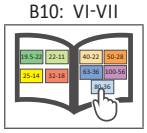

m = Metric (mm)

Service Keys for Collet Systems

Service Keys for ISO 10897 (DIN 6388) Collet Chuck Systems

Service Key			
Nominal Size	Size	Type	Part No.
16	40 - 43	S	**068179**
25	58 - 62	S	**068182**
32	68 - 75	S	**115867**

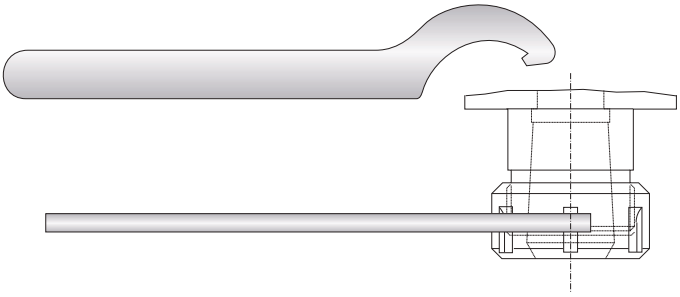

Service Keys for ISO 15488 (DIN 6499) Collet Chuck Systems

Service Key				
Nominal Size	Size	Service Key	Type	Part No.
ER 08 Mini	9.0	–	X	**415373**
ER 11 Mini	12.0	–	X	**415374**
ER 16 Mini	17.5	–	X	**415375**
ER 16	–	25	P	**215927**
ER 25	42.0	–	T	**215929**
ER 32	50.0	–	T	**215930**
ER 40	63.0	–	T	**215931**

Service Keys for Erickson Collet Chuck Systems

Service Key		
Service Key	Type	Part No.
13	P	**315689**
19	P	**315691**

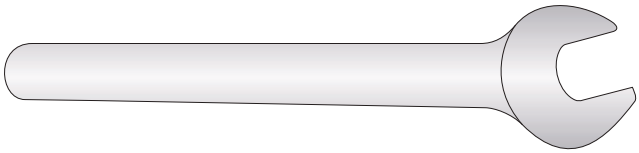

Service Keys for Milling Machine and Holding Arbors

Service Keys	
Service Key	Part No.
13	**115785**
16	**115699**
22	**115660**
27	**115661**
32	**115662**
40	**115663**
60	**315637**

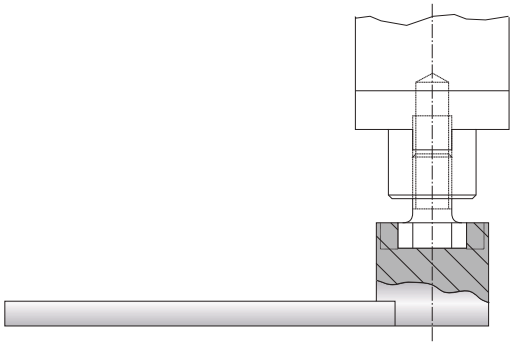

B10-M: 12-13
Key on B10-I: 1
B10: VI-VII

Allied Machine & Engineering

Guaranteed Test / Demo Application Form

Distributor PO #	

The following must be filled out completely before your test will be considered

IMPORTANT: For processing, send purchase order to your Allied Field Sales Engineer (FSE). Please clearly mark the paperwork as "Test Order."

Distributor Information

Company Name: _____

Contact: _____

Account Number: _____

Phone: _____

Email: _____

End User Information

Company Name: _____

Contact: _____

Industry: _____

Phone: _____

Email: _____

Current Process

List all tooling, coatings, substrates, speeds and feeds, tool life, and any problems you are experiencing

_____

_____

Test Objective

List what would make this a successful test (i.e. penetration rate, finish, tool life, hole size, etc.)

_____

_____

Application Information

Hole Diameter: _____ in/mm

Tolerance: _____

Material: _____ (4150, A36, cast iron, etc.)

Pre-existing Diameter: _____ in/mm

Depth of Cut: _____ in/mm

Hardness: _____ (BHN, Rc)

Required Finish: _____ RMS

State: _____ (Casting, hot rolled, forging)

Machine Information

Machine Type: _____ (Lathe, screw machine, machine center, etc.)

Builder: _____ (Haas, Mori Seiki, etc.)

Model #: _____

Shank Required: _____ (CAT50, Morse taper, etc.)

Power: _____ HP/KW

Thrust: _____ lbs/N

Rigidity:
- ☐ Excellent
- ☐ Good
- ☐ Poor

Orientation:
- ☐ Vertical
- ☐ Horizontal

Tool Rotating:
- ☐ Yes
- ☐ No

Coolant Information

Coolant Delivery: _____ (Through tool, flood)

Coolant Pressure: _____ PSI / bar

Coolant Type: _____ (Air mist, oil, synthetic, water soluble, etc.)

Coolant Volume: _____ GPM / LPM

Requested Tooling

QTY	Item Number

QTY	Item Number

engineering.eu@alliedmachine.com

Allied Machine & Engineering Co. (Europe) Ltd
93 Vantage Point, Pensnett Estate,
Kingswinford, DY6 7FR, United Kingdom

+44 (0)1384 400 900
www.alliedmachine.com

ALLIED MACHINE & ENGINEERING
WOHLHAUPTER®
Holemaking Solutions for Today's Manufacturing

ALLIED MACHINE & ENGINEERING

Warranty Information

Allied Machine & Engineering ("Allied Machine") warrants to original equipment manufacturers, distributors, industrial and commercial users of its products for one year from the original date of sale that each new product manufactured or supplied by Allied Machine shall be free from defects in material and workmanship.

Allied Machine's sole and exclusive obligation under this warranty is limited to, at its option, without additional charge, replacing or repairing this product or issuing a credit. For this warranty to be applied, the product must be returned freight prepaid to the plant designated by an Allied Machine representative and which, upon inspection, is determined by Allied Machine to be defective in material and workmanship.

Complete information as to operating conditions, machine, setup, and the application of cutting fluid should accompany any product returned for inspection. This warranty shall not apply to any Allied Machine products which have been subjected to misuse, abuse, improper operating conditions, improper machine setup or improper application of cutting fluid or which have been repaired or altered if such repair or alteration, in the judgement of Allied Machine, would adversely affect the performance of the product.

THIS WARRANTY IS IN LIEU OF ALL OTHER WARRANTIES, EXPRESS OR IMPLIED, INCLUDING ANY IMPLIED WARRANTY OF MERCHANTABILITY OR FITNESS FOR A PARTICULAR PURPOSE. Allied Machine shall have no liability or responsibility for any claim, whether in contract, tort or otherwise, for any loss or damage arising out of, connected with, or resulting from the manufacture, sale, delivery or use of any product sold hereunder, in excess of the cost of replacement or repair as provided herein.

Allied Machine shall not be liable in contract or in tort (including, without limitation, negligence, strict liability or otherwise) for economic losses of any kind or for any special, incidental, indirect, consequential, punitive or exemplary damages arising in any way out of the performance of, or failure to perform this agreement.

ALL PRICES, DELIVERIES, DESIGNS, AND MATERIALS ARE SUBJECT TO CHANGE WITHOUT NOTICE.

Allied Machine & Engineering Co. Europe Ltd. is registered to ISO 9001:2015 by bsi.

Allied Machine & Engineering is registered to ISO 9001:2015 by DQS.

Wohlhaupter GmbH is registered to ISO 9001:2015 by QUACERT.

Europe

Allied Machine & Engineering Co. (Europe) Ltd.
93 Vantage Point
Pensnett Estate
Kingswinford
West Midlands
DY6 7FR England

Phone:
+44 (0) 1384 400900

Wohlhaupter® GmbH
Maybachstrasse 4
Postfach 1264
72636 Frickenhausen
Germany

Phone:
+49 (0) 7022 408.0

United States

Allied Machine & Engineering
120 Deeds Drive
Dover OH 44622
United States

Phone:
+1.330.343.4283

Toll Free USA and Canada:
800.321.5537

Toll Free USA and Canada:
800.223.5140

Allied Machine & Engineering
485 W Third Street
Dover OH 44622
United States

Phone:
+1.330.343.4283

Toll Free USA and Canada:
800.321.5537

Asia

Wohlhaupter® India Pvt. Ltd.
B-23, 3rd Floor
B Block Community Centre
Janakpuri, New Delhi - 110058
India

Phone:
+91 (0) 11.41827044

Your local Allied Machine representative:

www.alliedmachine.com

Allied Machine & Engineering Co. Europe Ltd. is registered to **ISO 9001:2015** by bsi.

Allied Machine & Engineering is registered to **ISO 9001:2015** by DQS.

Wohlhaupter GmbH is registered to **ISO 9001:2015** by QUACERT.

ALLIED MACHINE & ENGINEERING
WOHLHAUPTER®
Holemaking Solutions for Today's Manufacturing

Copyright © 2024 Allied Machine and Engineering Corp. – All rights reserved.
All trademarks designated with the ® symbol are registered in the United States and other countries.
Available Online Only: B10-I_EU-EN
Publish Date: December 2024